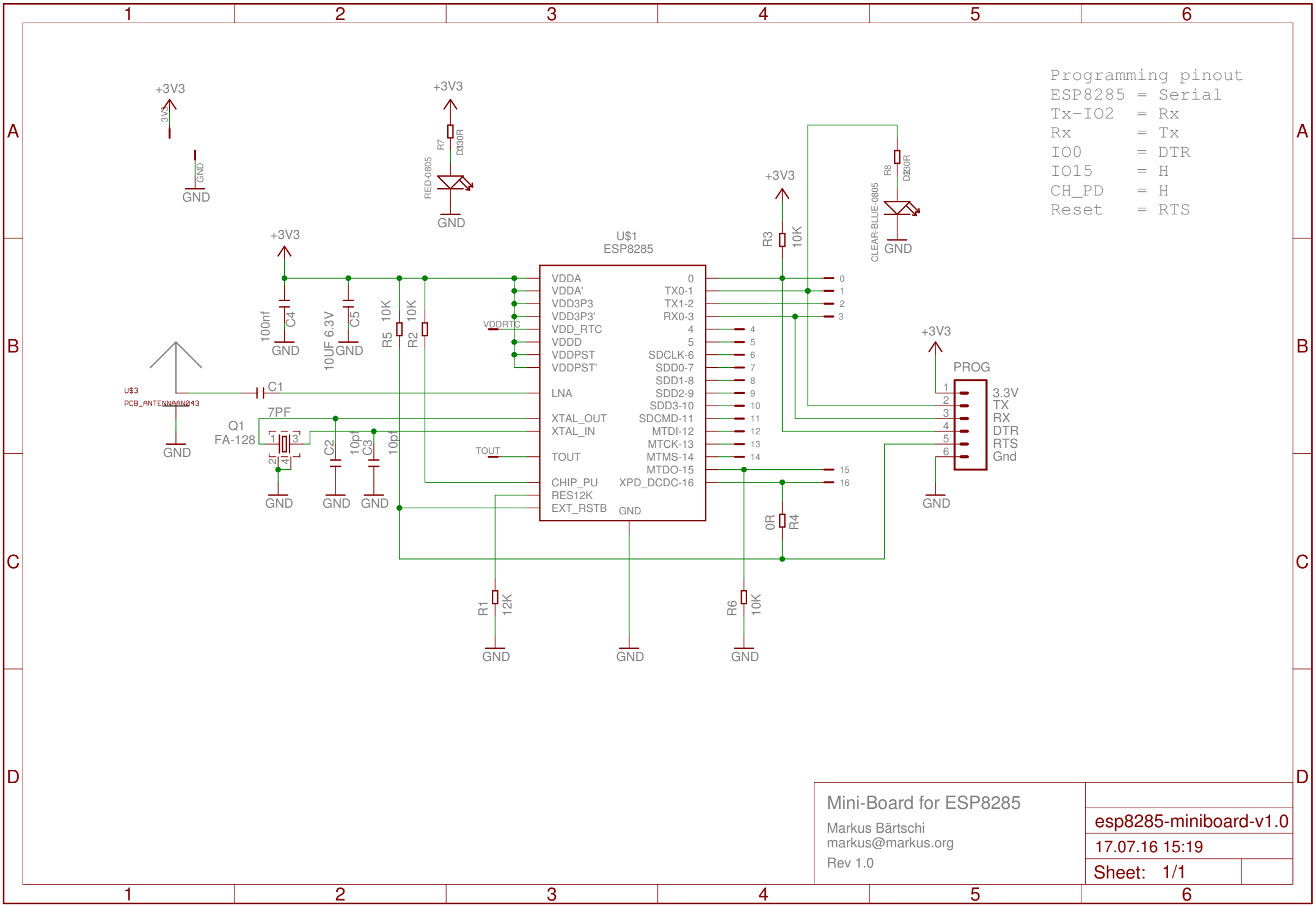

Mini-Board for ESP8285

Markus Bärtschi
markus@markus.org

Rev 1.0

esp8285-miniboard-v1.0

17.07.16 15:19

Sheet: 1/1