Keychain Radio

By Alex Park (18, TX)

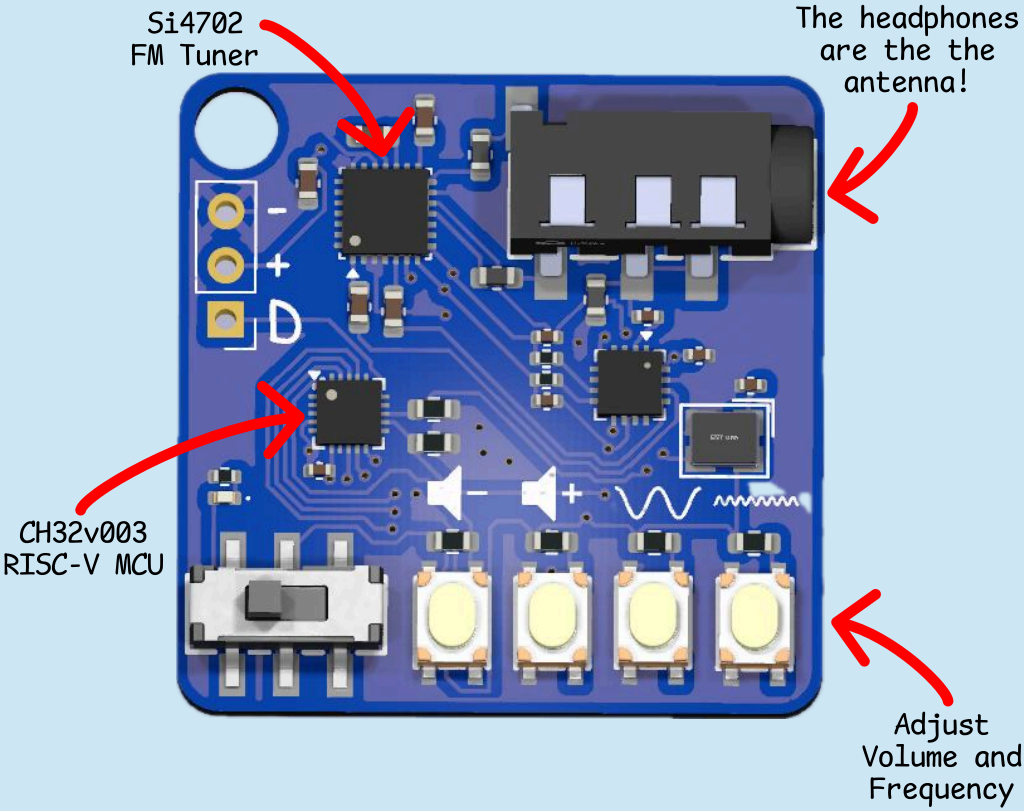

A Si4702-based broadcast FM (76-108MHz) receiver using a CH32v003 RISC-V microcontroller in a 3x3cm keychain.

GitHub Repo