Manufacturing Engineering I (MEng 3192)

BiT, FMIE, 2016 E.C.

2nd Semester

Manufacturing Engineering I (MEng 3192)

Unit 2

Casting Processes

Outlines:

1. Fundamentals of Casting;
2. Types and classification;
3. Molding Making;
4. Pattern;
5. Molding Sand Properties;
6. Elements of gating system;
7. Casting design (Gating system);
8. Melting practice;
9. Casting Defects and their remedies;

1. Fundamentals of casting processes

1. Fundamentals of casting processes

What is casting?

- Casting is a process in which molten metal flows by **gravity or other force** into a mold where it solidifies in the shape of the mold cavity;
- It is one of the oldest shaping processes, dating back 6000 years;

1. Fundamentals of casting processes

What is casting?

- The principle of casting seems simple: melt the metal, pour it into a mold (mold cavity) and let it cool and solidify;
- Casting includes both the casting of ingots and the casting of shapes;
- Casting can be used small weight to large weight (from gms to tones)

Applications,

Parts made by casting processes range in size from small components weighing only a few grams up to a very large products weighing tons.

- Transportation vehicles (engine blocks and heads for automotive vehicles),
- Turbine vanes;
- Agricultural parts;
- Air craft jet engines parts;

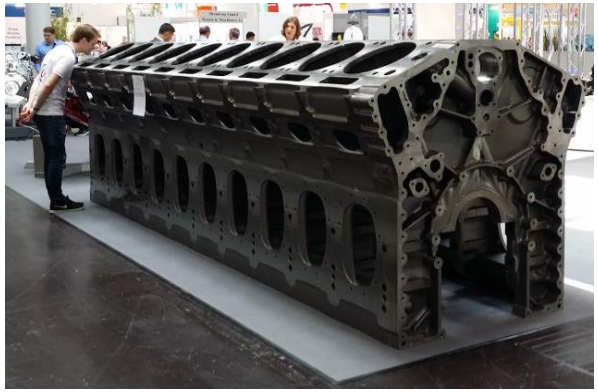

Applications,

- Jewelry, statues, wood-burning stoves,
- Machine frames, railway wheels, frying pans, pipes, and
- Pump housings,
- All varieties of metals can be cast, ferrous and nonferrous.

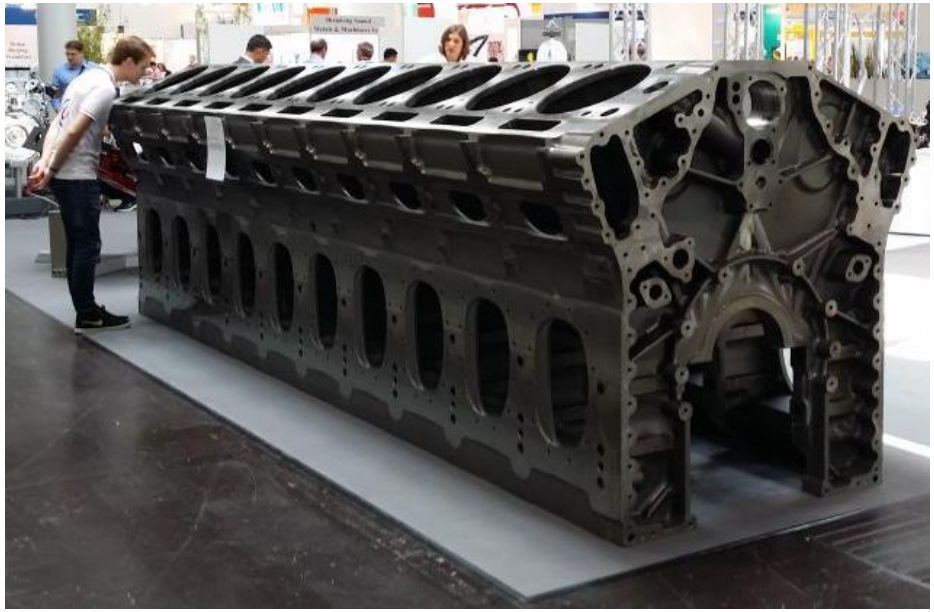

Advantages and disadvantages of castings

Advantages

- Casting can be used to create complex or intricate part geometries, including both external and internal shapes;
- Some casting operations are capable of producing parts to net shape.

(No further manufacturing operations are required to achieve the required geometry and dimensions of the parts.)

Advantages and disadvantages of castings

Advantages

- Casting process can be performed on any metal (ferrous and non-ferrous) that can be heated to the liquid state.
- Some casting methods are highly suited for mass production
- Casting is the easiest and quickest way (technique) from drawing (design) to the production.

Disadvantages of Sand Casting

- Limitation on mechanical properties;
- Porosity (empty spaces within the metal - reduces the strength of metal);
- Poor dimensional accuracy and surface finish (Sand Casting);
- Safety hazards to humans while processing hot metals and environmental problems;
- Removal of pattern of the thin and small parts is very difficult;

2. Types and classification of casting

2. Types and classification of casting

- Casting starts from mold making that contains the cavity. The cavity whose geometry determines the shape of the cast part.

- The actual size and shape of the cavity must be slightly oversized to allow for shrinkage that occurs in the metal during solidification and cooling.

- Molds are made of a variety of materials, including ***sand, plaster, ceramic, and metal.***

Mold Types: according to the types of mold used

- **In an open mold,** the liquid metal is simply poured until it fills the open cavity.

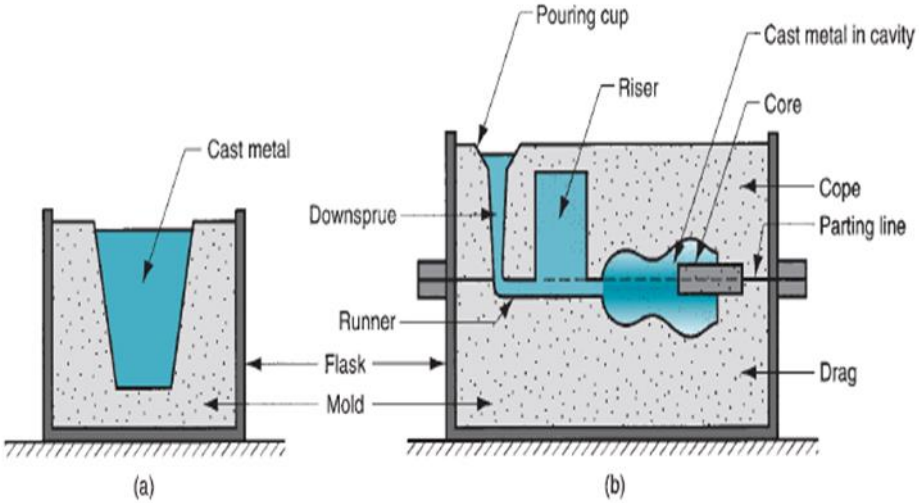

- **In a closed mold,** a passageway, called the gating system, is provided to permit the molten metal to flow from outside the mold into the cavity.

Mold Types:

Casting processes(Closed mold) divide into two broad categories according to type of mold used:

1. Expendable-mold and
2. Permanent-mold casting.

1. Expendable-mold

- An expendable mold means that the mold in which the molten metal solidifies must be destroyed in order to remove the casting.
- It has two types: permanent pattern and expendable pattern
- **Permanent Pattern:** Sand casting, shell mold, plaster mold ceramic mold.
- **Expendable Pattern:** loose foam, investment casting

2. Permanent-mold casting.

- A permanent mold is one that can be used over and over to produce many castings. It is made of metal (or, less commonly, a ceramic refractory material) that can withstand the high temperatures of the casting operation.

- Die casting is the most familiar process in this group.

Important Casting Terms:

1. Flask: Made from metal or wood which contains mold and in which the shape is formed. It has the top and bottom parts, drag and cope.

2. Pattern: the repelica of the final object& its size takesinto consideration different allowances. The cavity is made by using the pattern.

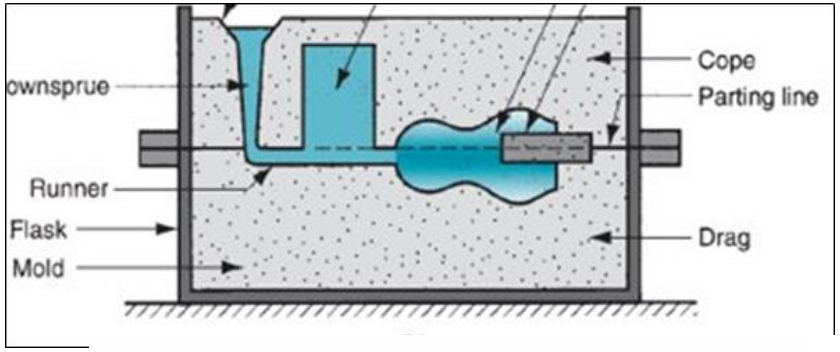

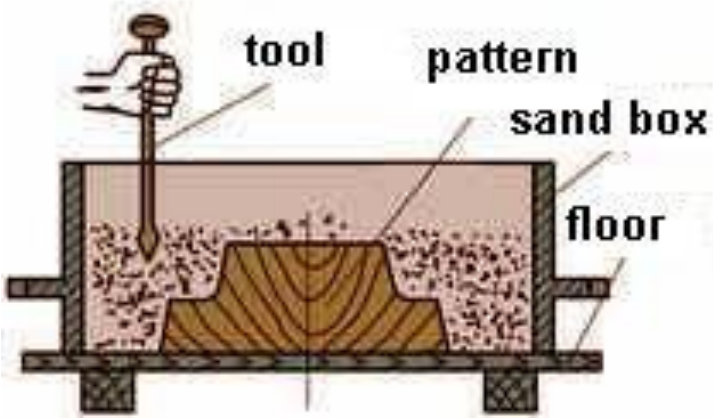

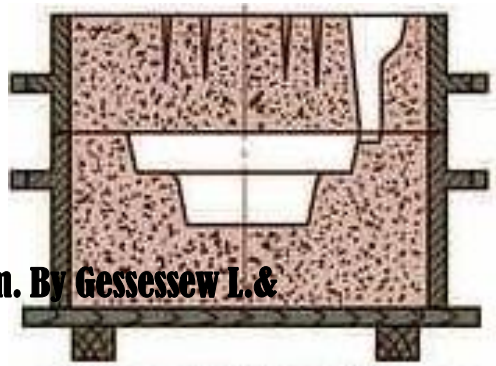

Important Casting Terms:

3. Parting line: the dividing line of the top and bottom flask;

4. Powering Basin: A small funnel shaped cavity at the top of the mold into which the molten metal is poured.

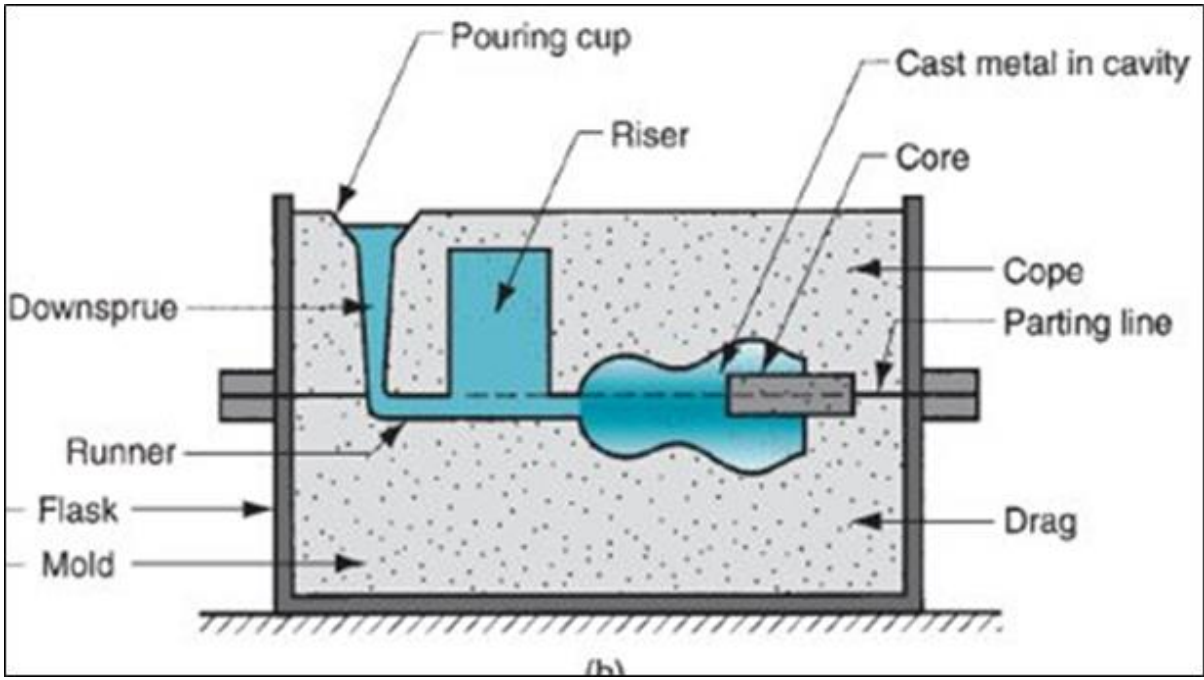

5. Downsprue: the passage through which the molten metal from the pouring basin research the mold cavity. It control the flow of metal into the mold.

Important Casting Terms:

6. Runner: The channel through which the molten metal is carried from the sprue to the gate.

7. Riser: A coolumn of molten metal placed in the mold to feed the casting as it shrinks and solidifies.

8. Gate: A channel through which molten metal enters to the mold cavity.

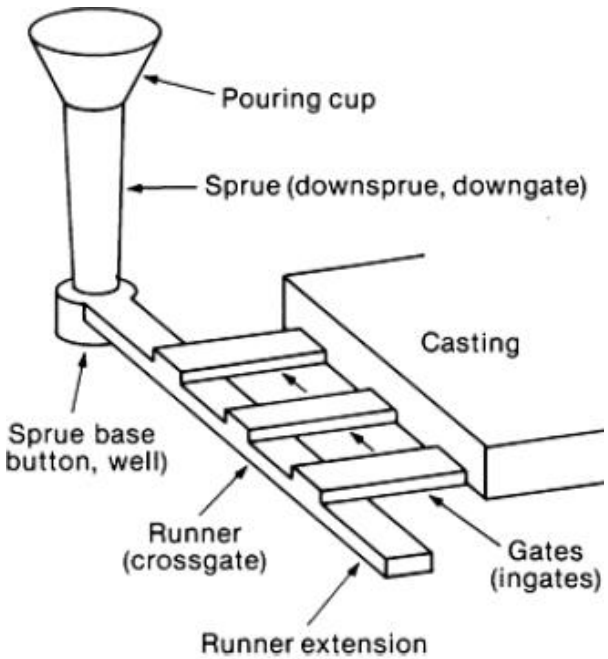

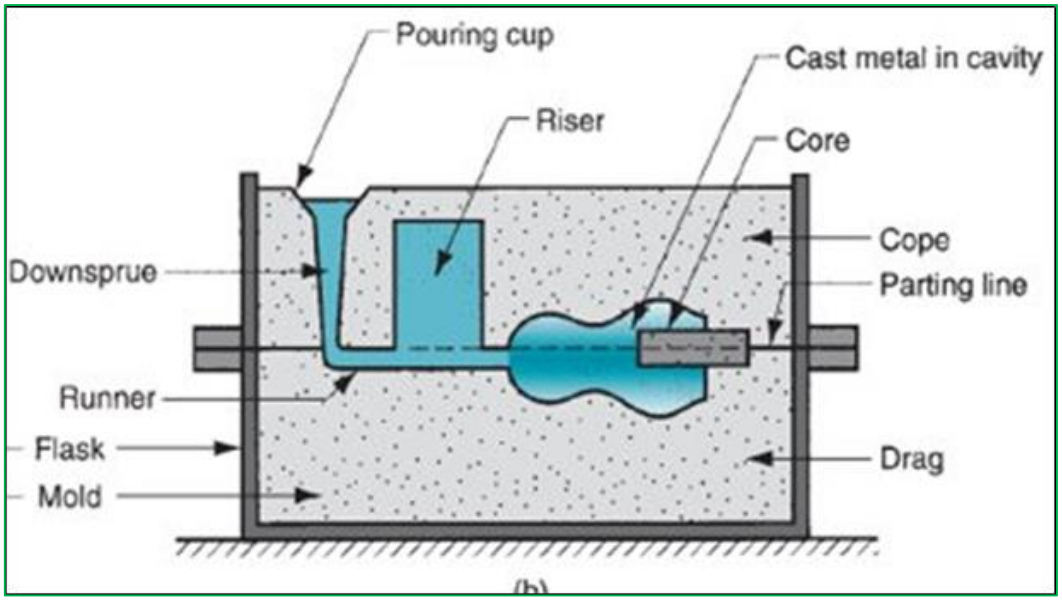

Important Casting Terms:

9. Core: Separate pats of the mold, usually made of sand and used to define internal geometries.

10. Chaplets: Used to support the cores inside the mold cavities to take cares of its own weight.

11. Vents: small opening used to facilitate escape of air gases.

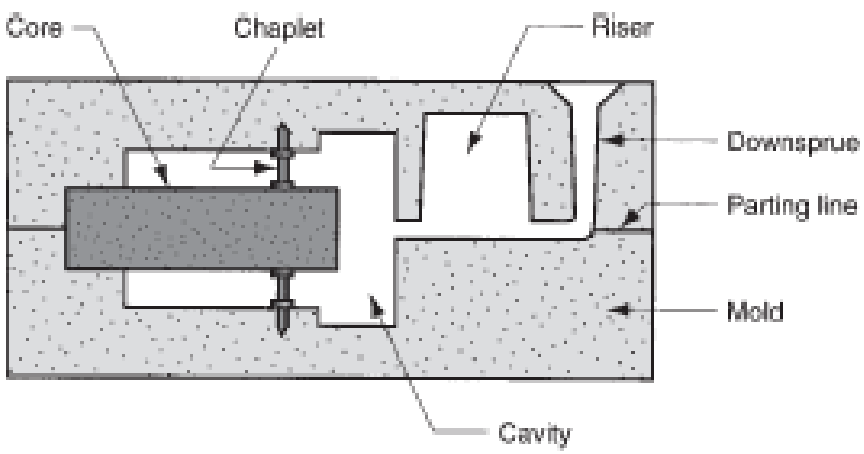

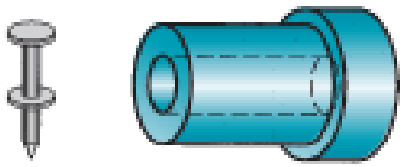

Sequence of sand casting process

- Steps in the production sequence in sand casting. The steps include not only the ***casting operation*** but also ***pattern making*** and ***mold making***.

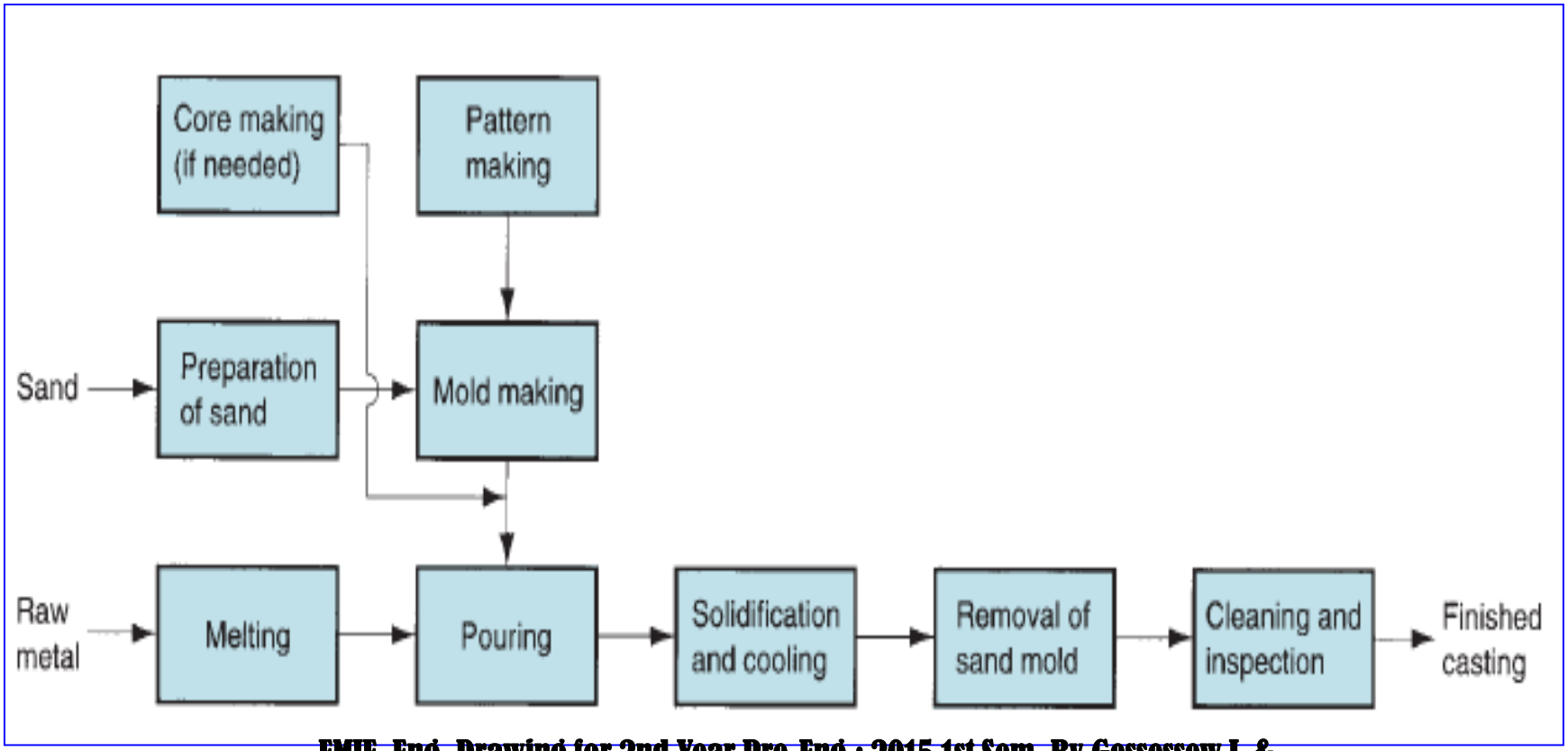

3. Mold Making

3. Mold Making

Mold making: is to compacting the molding sand around the pattern for both cope and drag in a container called a flask.

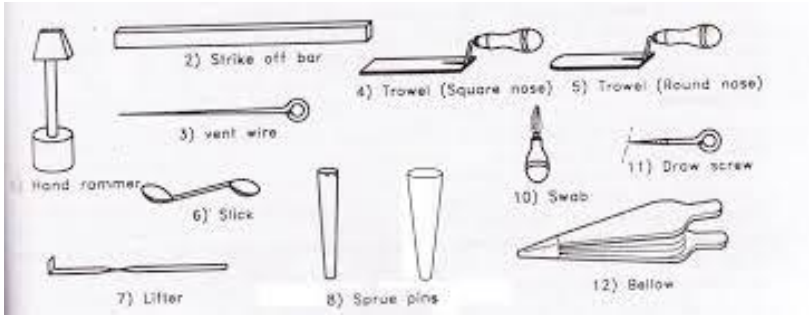

Main objective of mold making is to make ***cavity***

Methods of Packing:
Hand and Mechanized

3. Mold Making

- The simplest one is hand ramming, accomplished manually by a foundry worker.

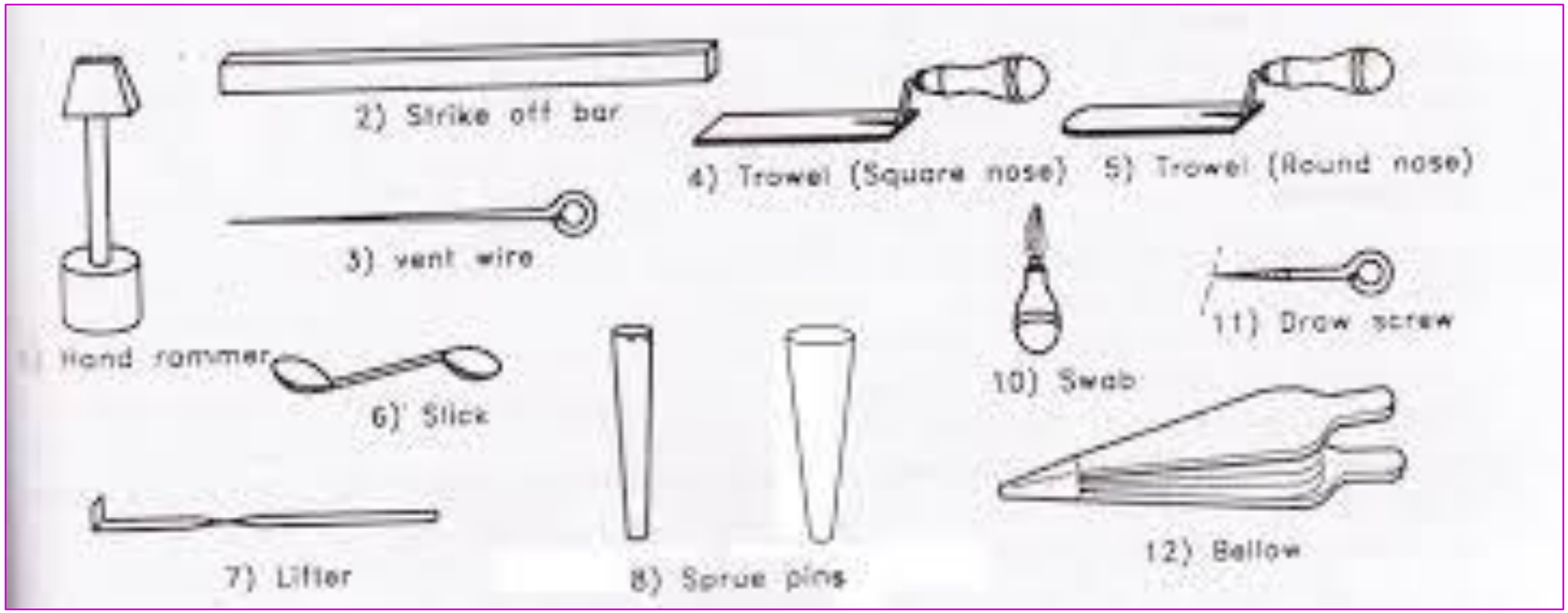

Tools used in hand ramming

Mechanized Packing;

1. Squeezing the sand around the pattern by pneumatic pressure;

Mechanized Packing;

2. Jolting action in which the sand, contained in the flask with the pattern, is dropped repeatedly in order to pack it into place; and

Mechanized Packing;

3. Slinging action, in which the sand grains are impacted against the pattern at high speed.

4. Pattern

4. Pattern

- **What is pattern?**
- Pattern is a full-sized model of the part, enlarged to account for shrinkage and machining allowances in the final casting.

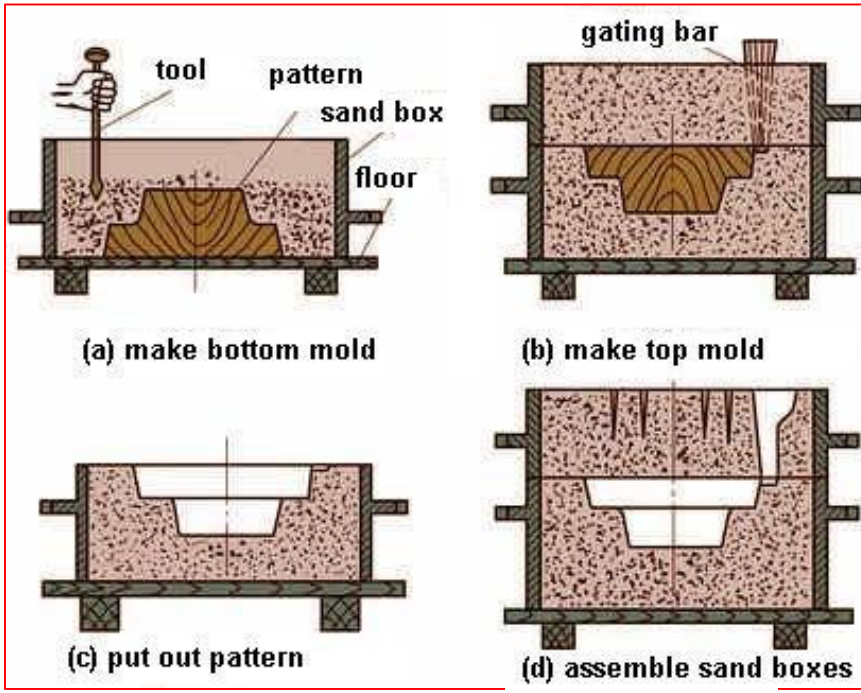

4. Pattern

What is pattern?

- Materials used to make patterns include **wood, plastics, and metals**. Wood is a common pattern material because it is easily shaped.

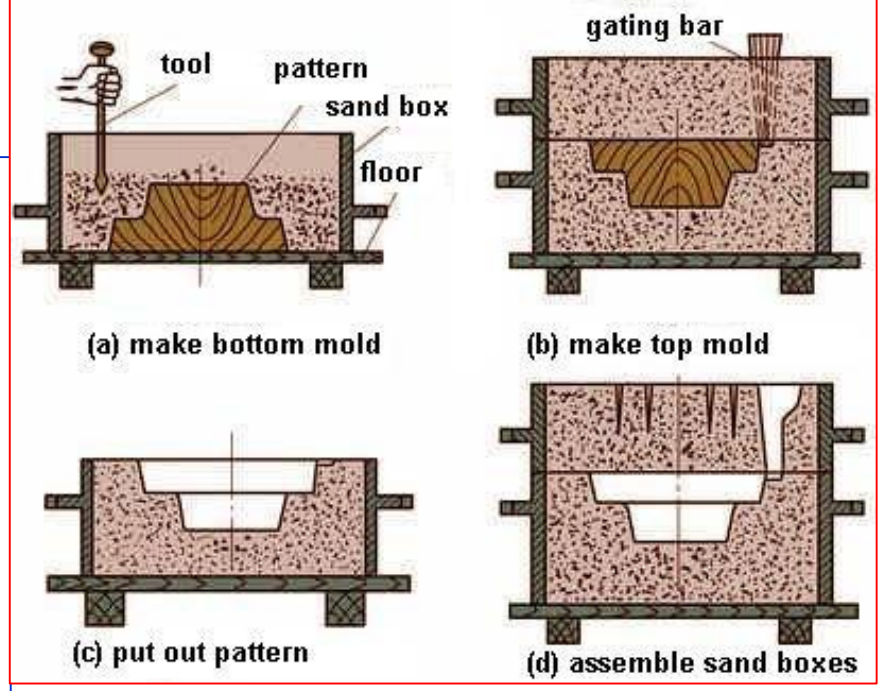

- Selection of the appropriate pattern material depends to a large extent on the total quantity of castings to be made.

Pattern Material

- Some materials used for making patterns are: wood, metals and alloys, plastic, plaster of Paris, plastic and rubbers, wax, and resins.
- To be suitable for use, the pattern material should be:

  Easily worked, shaped and joined

  Light in weight

  Strong, hard and durable

  Resistant to wear and abrasion

  Resistant to corrosion, and to chemical reactions

  Dimensionally stable and unaffected by variations in temperature and humidity

  Available at low cost

Pattern Material

- The most commonly used pattern material is wood, since it is readily available and of low weight. Also, it can be easily shaped and is relatively cheap.
- A pattern prepares a mold cavity for the purpose of making a casting.
- A pattern may contain projections known as core prints if the casting requires a core and need to be made hollow.
- Patterns properly made and having finished and smooth surfaces reduce casting defects.
- A properly constructed pattern minimizes the overall cost of the castings.

Types of Pattern

1. Solid pattern
2. Split pattern
3. Match-plate pattern
4. Cope and drag pattern
5. Loose piece pattern
6. Sweep pattern
7. Gated Pattern
8. Skeleton pattern
9. Shell pattern

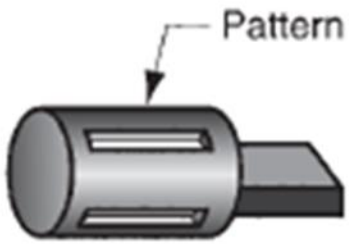

Solid Pattern

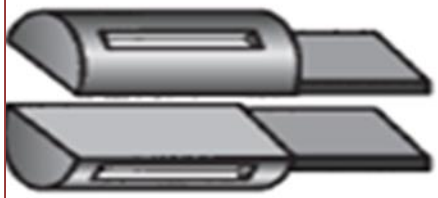

Split Pattern

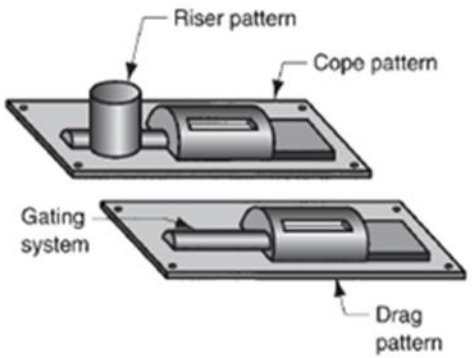

Cope and Drag Pattern

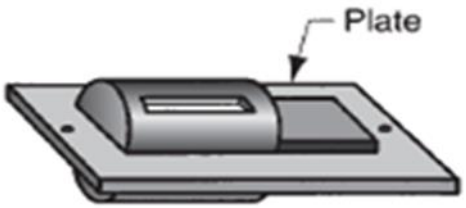

Match Plate Pattern

Types of Pattern Cont'd

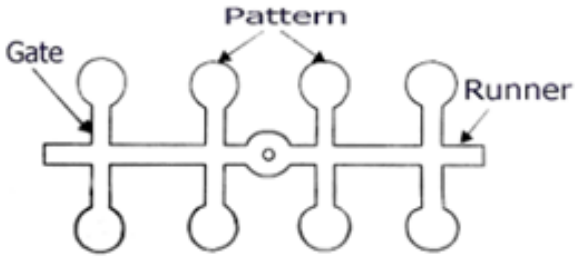

Gated Pattern

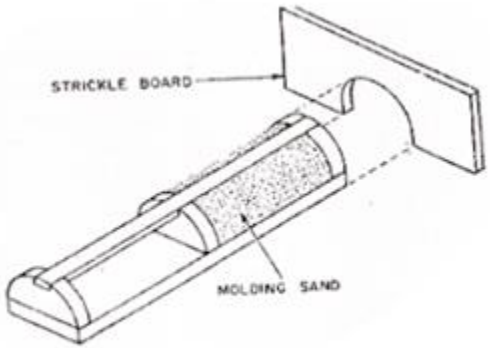

Skeleton Pattern

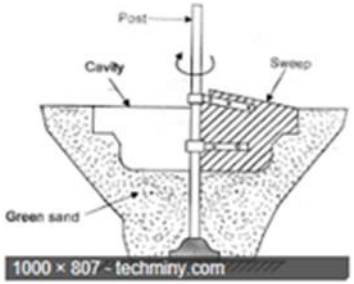

Sweep Pattern

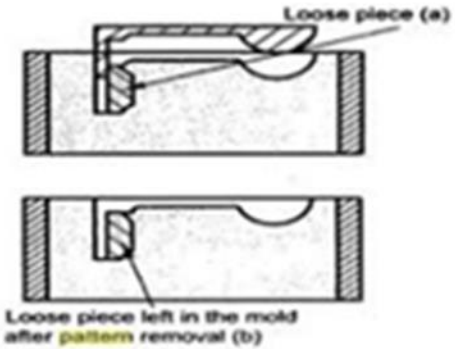

Loose Piece Pattern

Types of Patterns Contn'd

1. Solid /single piece pattern: Made in one piece; and simple to make.

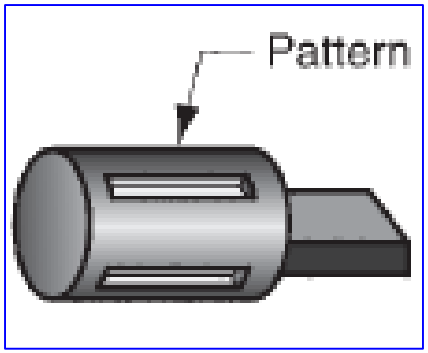

2. Split /two piece Pattern : Made in two pieces; one piece in the cope and the other in the drag. Easy to withdrawal of the pattern.
For complex part geometries and for moderate no. of products.

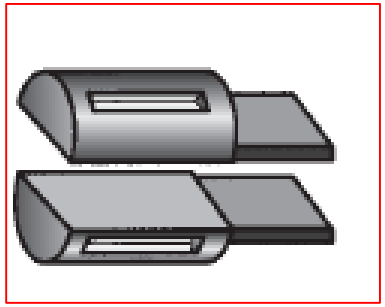

Types of Patterns Contn'd

3. Match Plate Pattern: Patterns made from two pieces one piece mounted on one side and the other is mounted on the other side of the plate. Produces accurate casting at a faster rate.

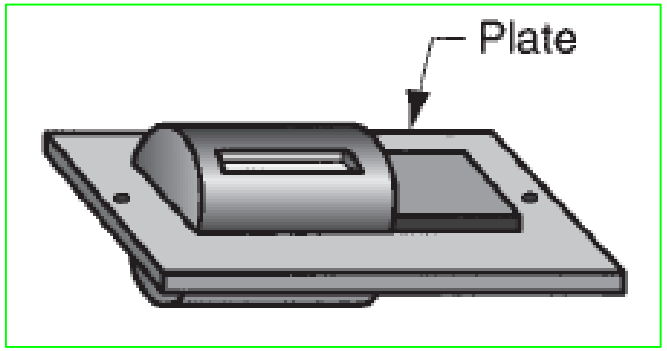

4. Cope and Drag Pattern: split pattern halves are attached to separate plates, so that the cope and drag sections of the mold can be fabricated independently, instead of using the same tooling for both. Produce many casting at a times that saves time and cost

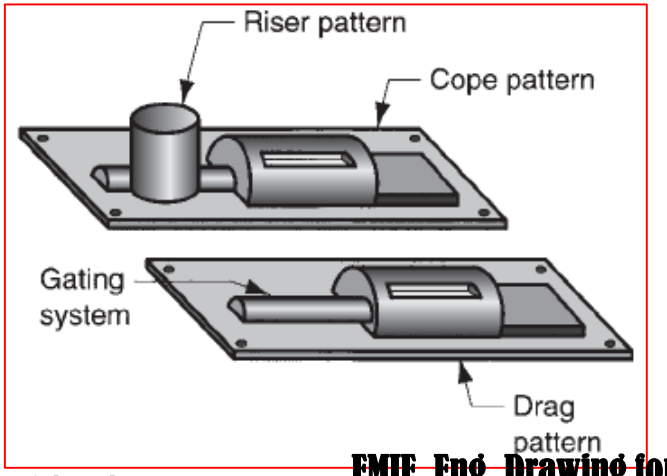

Types of Patterns Contn'd

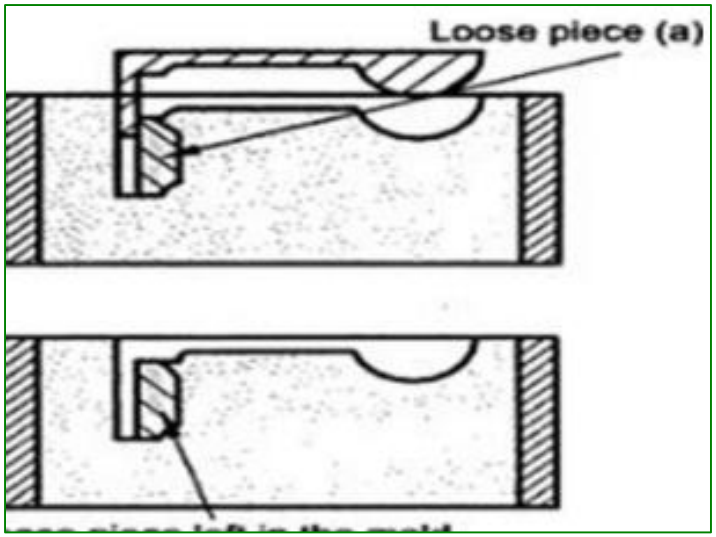

5. Loose Piece Pattern: Pattern includes loose piece for easy withdrawal

5. Sweep Pattern: Generally used for casting large symmetrical parts. It saves a lot labor and time.

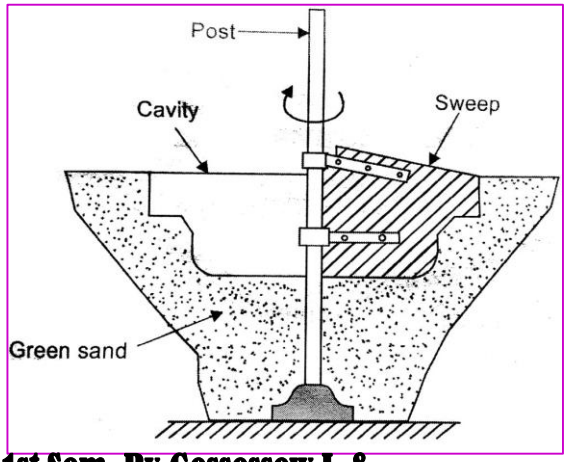

What is core?

- A core is a full-scale model of the interior surfaces of the part. It is inserted into the mold cavity prior to pouring, As with the pattern, the actual size of the core must include allowances for shrinkage and machining.
- Depending on the geometry of the part, the core may or may not require supports to hold it in position in the mold cavity during pouring.

Pattern Allowances

- Pattern allowance is a vital feature as it affects the dimensional characteristics of the casting. Thus, when the pattern is produced, certain allowances must be given on the sizes specified in the finished component drawing so that a casting with the particular specification can be made.
- The selection of correct allowances greatly helps to reduce machining costs and avoid rejections.
- The ***allowances are***
    - Shrinkage or contraction allowance
    - Draft or taper allowance
    - Machining or finish allowance
    - Distortion or camber allowance
    - Rapping allowance

1. Shrinkage or Contraction Allowance

- All most all cast metals shrink or contract volumetrically on cooling. The metal shrinkage is of two types

1. ***Liquid Shrinkage:*** it refers to the reduction in volume when the metal changes from liquid state to solid state at the solidus temperature. To account for this shrinkage; riser, which feed the liquid metal to the casting, are provided in the mold.

2. ***Solid Shrinkage:*** it refers to the reduction in volume caused when metal loses temperature in solid state. To account for this, shrinkage allowance is provided on the patterns.

Common Shrinkage Allowance

SHRINKAGE ALLOWANCE

Cast Metal	Over	PATTERN DIMENSION, mm			
		-	630	1250	1800
	Upto	630	1250	1800	
		SHRINKAGE, mm/m			
Grey C.I					
Open & Cored construction		10	8	7	
Cast Steel					
Open construction		20	16	16	13
Cored construction		20	16	13	10
Aluminium					
Open construction		13	13	11	10
Cored construction		13	10 to 5	10	10
Magnesium					
Open construction		56	56	13	13
Cored construction		13	13 to 10	10	10
Brass		15			
Bronze		16 to 20			

Activate
Go to Setti

Cont…

2. Draft or Allowance

Taper By draft is meant the taper provided by the pattern maker on all vertical surfaces of the pattern so that it can be removed from the sand without tearing away the sides of the sand mold.

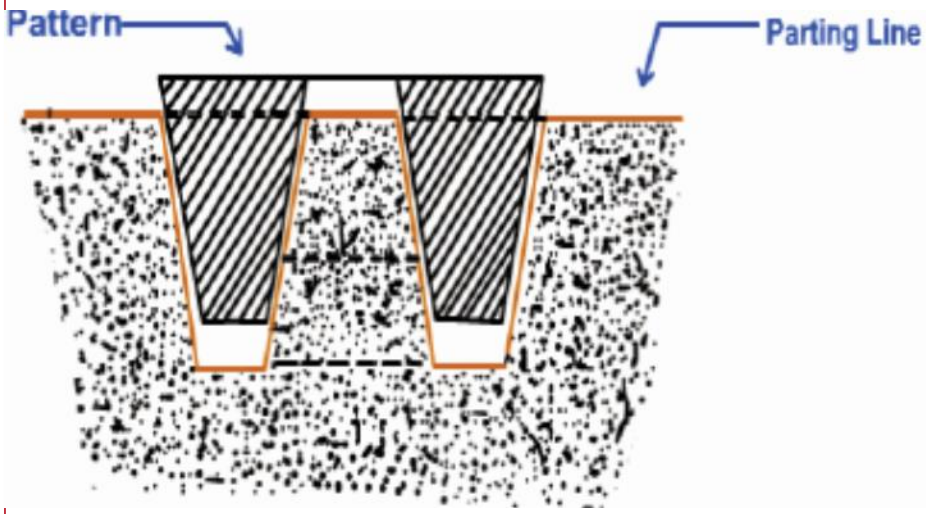

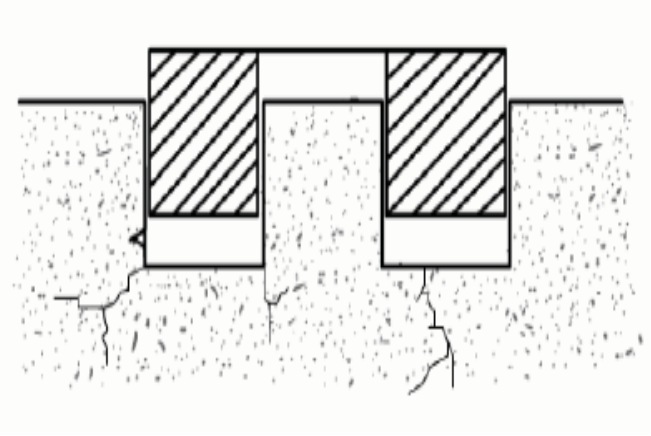

Here all of its surfaces are well away from the sand surface. Thus the pattern can be removed without damaging the mold cavity.

Recommended Draft Allowances

Height of Pattern	Normal Draft		Draft in Bores& Grooves	
	In degree	In mm	In degree	In mm
0-10	3	0-.5	5	0-0.9
11-20	2	0.4-0.7	3	0.6-1
21-40	1.5	0.6-1	2	07-1.4
41-70	1	0.7-1.2	1.5	1-1.1
71-100	.75	1-1.4	1.2	1.5-2
101-130	.7	1.2-1.6	1	1.8-2.3
131-160	.65	1.4-1.8	0.9	2.1-2.5
161-200	.6	1.6-2	0.8	2.3-3

3. Machining or Finish Allowance

- Finish and accuracy achieved in sand casting are generally poor.
- To obtain the required good surface finish or dimensionally accurate, it is generally achieved by subsequent machining.
- Machining or finish allowances are added in the pattern dimension.

Machining Allowance

RECOMMENDED MACHINING ALLOWANCES ON CASTINGS

Dimension of pattern, mm		MATERIAL OF CASTING							
		Cast		Cast Steel		Malleable Iron		Brass, Bronze, Aluminum	
Over	Upto	On bore mm	On surface mm	On bore mm	On surface mm	On bore mm	On surface mm	On bore mm	On surface mm
-	160	3	2.5	5	3	1.6	1.6	2.5	1.6
160	250	3	2.5	5	3	2.5	1.6	2.5	1.6
250	315	3	2.5	5	3	2.5	2.5	2.5	1.6
315	630	5	3	6.3	5	4	3	5	3
630	900	6.3	5	8	8	5	5	5	4
900	1120	6.3	5	8	8	Special Instructions			
1120	1600	8	6.3	10	10				
1600	2000	10	8	12.5	11.2				
2000	3150	11.2	10	16	12.5				
3150	Special Instructions								

Exercises

1. Determine the dimensions of the pattern for the casting shown in the figure below. Take shirinkage allowance 25 mm/m; machining allowance on all external surfaces and bore are 2 mm and 1 mm respectively and draft allowance 1 degree for both internal and external surfaces.

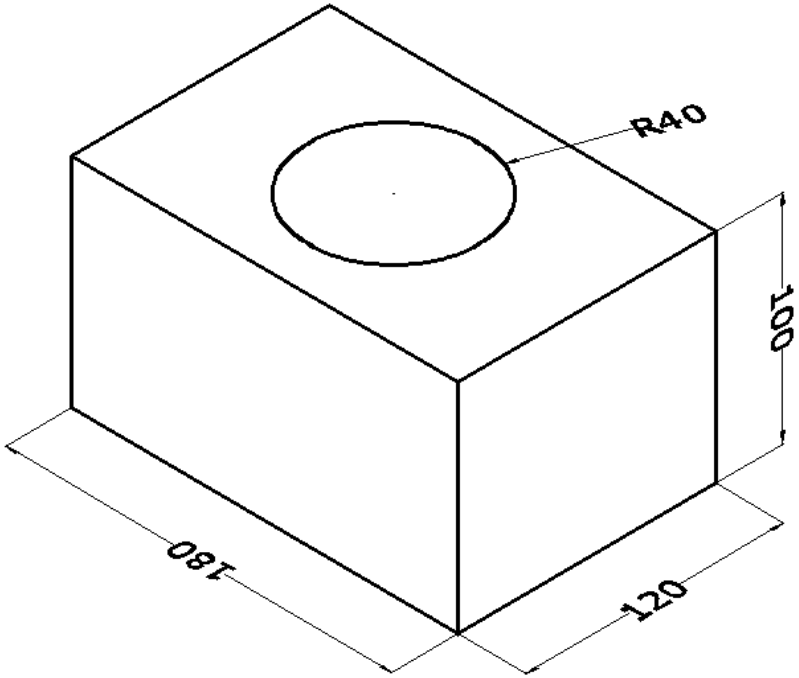

Exercises

2. A cast iron cylinder of 450 mm outside diameter, 75 mm inside diameter, and 150 mm long is to be obtained by sand casting. Design the required patter assuming that the internal hole is to be finished by machining. Take 10 mm/m for shirinkage allowance and machining allowance 5 mm.

5. Sand casting mold and Molding Sand Properties

Sand casting Mold

- **Sand casting** is a cast part produced by forming a mold from a sand mixture and then pouring molten liquid metal into the cavity in the mold. The mold is then cooled until the metal has solidified
- Nearly all alloys can be sand casted, including metals with high melting temperatures, such as steel, nickel, and titanium (1455 deg C and
- Castings product range in size from small to very large
- Production quantities from one piece to millions pieces.

Sand casting Mold

- Foundry sands are silica (SiO_2) or silica mixed with other minerals.
- Sand should possess good refractory properties—capacity to stand up under high temperatures without melting or otherwise degrading.
- Important features of the sand include grain size, distribution of grain size in the mixture, and shape of the individual grains.
- Small grain size provides a better surface finish on the cast part, but large grain size is more permeable (to allow escape of gases during pouring).
- Molds made from grains of irregular shape tend to be stronger than molds of round grains because of interlocking, yet interlocking tends to restrict permeability.

Sand casting Mold

- In making the mold, the grains of sand are held together by a mixture of water and bonding clay.
- **A typical mixture (by volume) is 90% sand, 3% water, and 7% clay.**
- Other bonding agents can be used in place of clay, including organic resins (e.g., phenolic resins) and inorganic binders (e.g., sodium silicate and phosphate).
- Besides sand and binder, additives are sometimes combined with the mixture **to enhance properties such as strength and/or permeability** of the mold.

Sand Casting Mold cont'd

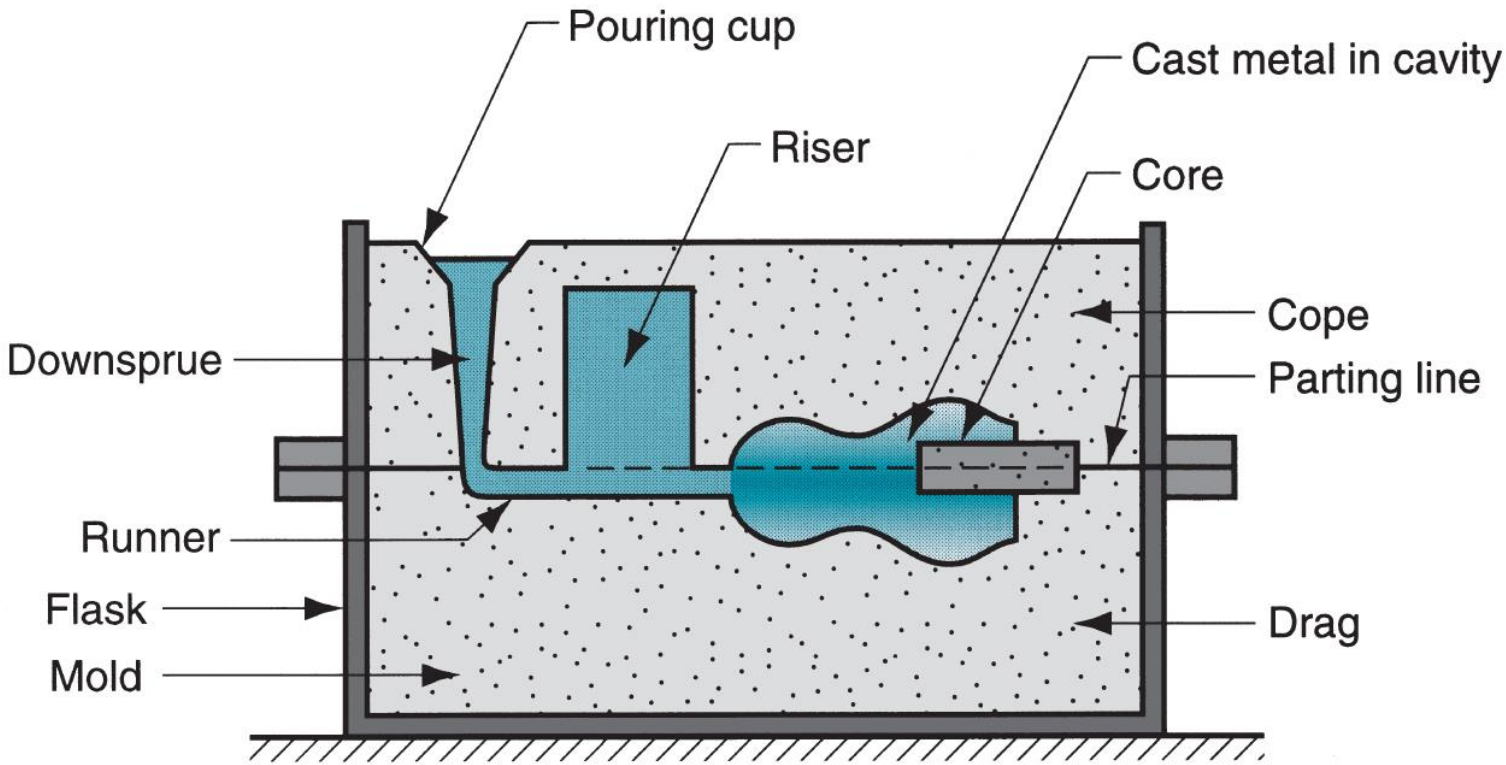

Properties/features of molding sands

1. Green strength

- The green sand after water has been mixed into it must have sufficient strength and toughness (plasticity) to permit the making and handling of the mold.
- For this, the sand grains must be adhesive, i.e. they must be capable of attaching themselves to another body therefore, sand grains having high adhesiveness will stick to the sides of the molding box.
- By virtue of this property, the pattern can be taken out from the mold without breaking the mold and also the erosion of mold wall surfaces does not occur during the flow of molten metal.

2. Dry strength

As soon as the molten metal is poured into the mold, the moisture in the sand layer adjacent to the hot metal gets evaporated and this dry sand layer must have sufficient strength to its shape in order to avoid erosion of mold wall during the flow of molten metal.

3. Permeability

It is the property of sand which permits the steam and other gases to pass through the sand mold. The porosity of sand depends upon its **grain size, grain shape, moisture and clay components.** If the sand is too fine, the porosity will be low.

4. Refractoriness

Refractoriness is defined as the ability of molding sand to withstand high temperatures without breaking down or fusing thus facilitating to get sound casting.

5. Collapsibility

After the molten metal in the mold gets solidified, the sand mold must be collapsible so that free contraction of the metal occurs and this would naturally avoid the tearing or cracking of the contracting metal is hindered by the mold.

It also refers to the ability to remove the sand from the casting during cleaning;

6. Plasticity

- The sand must have sufficient plasticity to produce a good mould. It is the ability of the sand to get compacted and behave like a fluid.
- It will flow uniformly to all portions of pattern when **rammed and distribute** the ramming pressure evenly all around in all directions.

7. Adhesiveness

- It is property of molding sand to get stick or adhere with foreign material such sticking of molding sand with inner wall of molding box.

Cont…

8. Cohesiveness

- It is defined as the strength of the molding sand.
- It is property of molding sand by virtue which the sand grain particles interact and attract each other within the molding sand. Thus, the binding capability of the molding sand gets enhanced to increase the green, dry and hot strength property of molding and core sand.

Types of Sand Mold

1. **Green sand molds:** are made of a mixture of sand, clay, and water, the word green referring to the fact that the mold contains moisture at the time of pouring.

It possess sufficient strength for most applications, good collapsibility, good permeability, good reusability, and are the least expensive of the molds.

They are the most widely used mold type. Moisture in the sand can cause defects in some castings, depending on the metal and geometry of the part.

Types of Sand Mold

2. A dry-sand mold: is made using **organic binders rather than clay*,** and the mold is baked in a large oven at temperatures ranging from 200 deg C to 320 deg C. Oven baking strengthens the mold and hardens the cavity surface.

A dry sand mold provides better dimensional control in the cast product, compared to green-sand molding.

- Dry-sand molding is **more expensive**, and production rate is reduced because of drying time.
- Applications are generally **limited to medium and large castings** in low to medium production rates.

*Organic binder: linseed oil, **core oil**, resins, dextrin, molasses;

Types of Sand Mold

3. Skin-dried mold: the advantages of a dry-sand mold is partially achieved by drying the surface of a green-sand mold to a depth of 10 to 25 mm at the mold cavity surface, using torches, heating lamps, or other means. Special bonding materials must be added to the sand mixture to strengthen the cavity surface.

Types of Sand Mold

4. Core sand:

- Core sand is used for making cores and it is sometimes also known as oil sand.
- Core sand is need to be stronger than the molding sand;
- Clay used as binder in molding sand is not enough and other additives are uses (Organic binder)
- Organic binders : linseed oil, **core oil**, resins, dextrin, molasses;
- Core oil is a mixture of linseed, soya, fish & petroleum oil, and coal tar;

Types of Sand Mold

5. Loam sand: Loam is mixture of sand and clay with water to a thin plastic paste. This is particularly employed for loam molding used for large grey iron castings with sweep pattern/skeleton pattern.

Types of Sand Mold

6. Parting sand: without binder and moisture is used to keep the green sand not to stick to the pattern and also to allow the sand on the parting surface the cope and drag to separate without clinging. (Calcium carbonate/ dry fine sand)

6. Elements of Gating System

Elements of gating systems

- The gating system in a casting mold is the channel, or network of channels, by which molten metal flows into the mold cavity from outside the mold by the laddle.
- In addition to the gating system, any casting in which shrinkage is significant requires a riser connected to the main cavity.
- The riser is a reservoir in the mold that serves as a source of liquid metal for the casting to compensate for liquid shrinkage during solidification.

Elements of Gating System

Elements of gating systems are:

- Pouring basin
- Sprue
- Sprue Base well
- Runner
- Gate/Ingate
- Riser

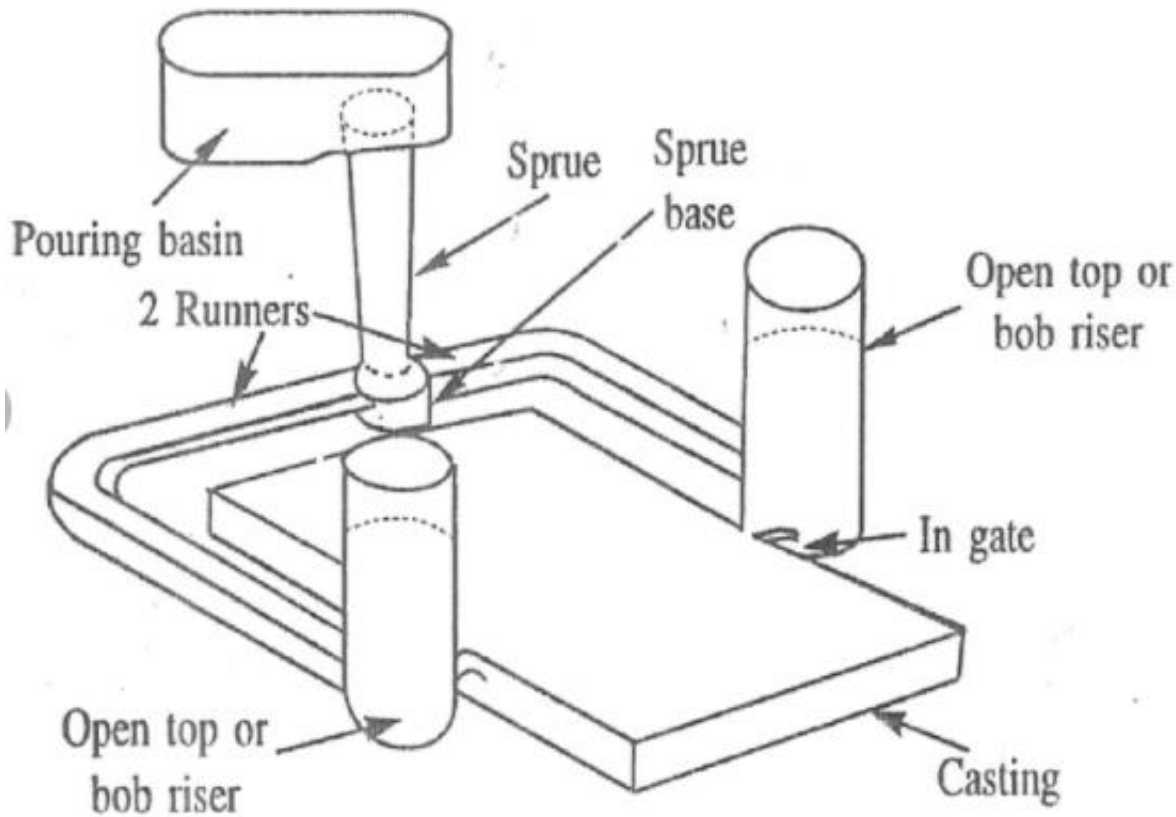

Elements of Gating System

Pouring Basin: Collects the molten metal, which is poured from ladle.

Sprue: Circular in cross section. It leads the molten metal from sprue basin to the sprue well.

Sprue Well: changes the direction of flow of the molten metal to right angle and passes it to the runner.

Runner: takes the molten metal from sprue to the casting .

Ingates: where molten metal moves from runner to the mold cavity.

7. Casting Design(Gating System)

Casting Design

- A good gating design should ensure proper distribution of molten metal without excessive temperature loss, turbulence, gas entrapping and slags;

- **Very slow** pouring require longer filling time and solidification will start even before filling of mold.

Casting Design

- This can be restricted by using super heated metal, but in this case gas solubility will be a problem.
- Faster pouring can erode the mold cavity.
- So gating design is important and it depends on the metal and molten metal composition.

Mold Filling Time

- **Using Bernoulli's Equation**

$$h_1 + \frac{p_1}{\rho} + \frac{v_1^2}{2g} + F_1 = h_2 + \frac{p^2}{\rho} + \frac{v_2^2}{2g} + F_2$$

$$v = \sqrt{2gh}$$

Mold Filling Time

- Continuity law

$$Q = v_1 A_1 = v_2 A_2$$

Then, Time of Mold Filling:

$$T_{MF} = \frac{V}{Q}$$

Where:
TMF –Mold filling time
V-Volume of mold cavity
Q-Volume flow rate

Solidification Time

- Solidification involves the transformation of the molten metal back into the solid state;

- The solidification process differs depending on whether the metal is a pure element or an alloy;

Solidification Time

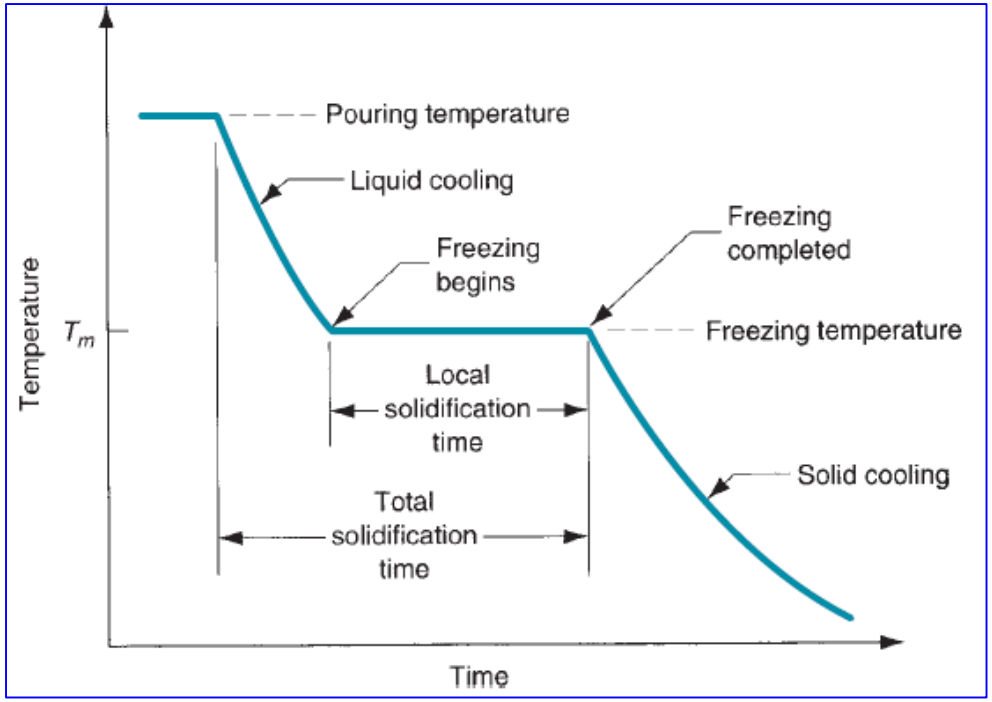

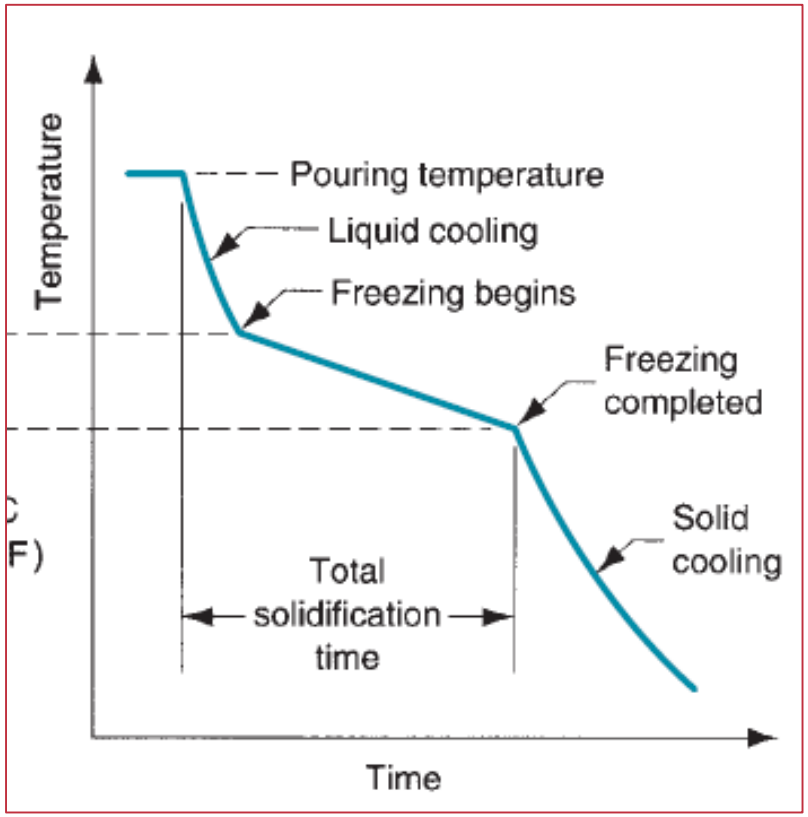

Solidification Time

- Whether the casting is pure metal or alloy, solidification takes time.
- The total solidification time is the time required for the casting to solidify after pouring.
- This time is dependent on the size and shape of the casting by an empirical relationship known as Chvorinov's rule,

Solidification Time

Chvorinov's rule states:

$T_{TS} = Cm\ (V/A)^{n}$

$$T_{TS} = C_m \left(\frac{V}{A}\right)^n$$

Where:

TTS= total solidification time, min

V= volume of the casting, cm^3

A=surface area of the casting, cm^2

n is an exponent usually taken to have a value = 2 and

Cm is the mold constant, min/cm2

Solidification Time

Examples

1. Determine the dimensions of the pattern for the casting shown in the figure below. Take shirinkage allowance 25 mm/mt; machining allowance on all surfaces and bore are 2 mm and 1 mm respectively and draft allowance 1 degree for internal and external surfaces.

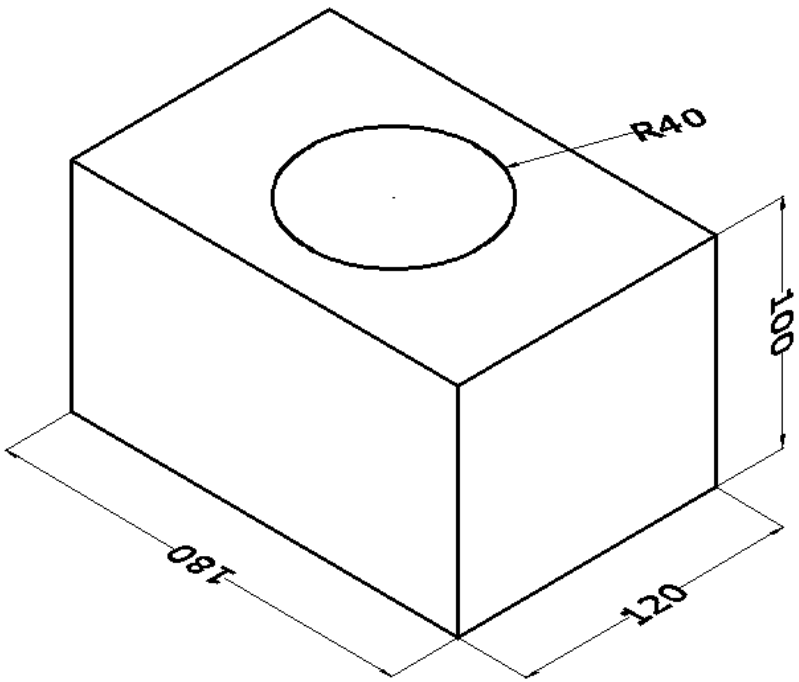

Solidification Time

Examples

2. A mold has a down sprue of length = 155 mm. The cross-sectional area at the bottom of the sprue is 12.5 mm_2. The sprue leads into a horizontal runner which feeds the mold cavity, whose volume =1905 mm_3. Determine (a) the velocity of the molten metal flowing through the base of the down sprue, (b) the volume rate of flow, and (c) the time required to fill the mold cavity

Solidification Time

Examples

3. In the casting of steel under certain mold conditions, the mold constant in Chvorinov's rule is known to be 4.0 min/cm2, based on previous experience. The casting is a flat plate whose length= 30 cm, width=10 cm, and thickness=20 mm. Determine how long it will take for the casting to solidify.

Solidification Time

Examples

4. In casting experiments performed using a certain alloy and type of sand mold, it took 155 s for a cube-shaped casting to solidify. The cube was 50 mm on a side. (a) Determine the value of the mold constant in Chvorinov's rule. (b) If the same alloy and mold type were used, find the total solidification time for a cylindrical casting in which the diameter= 30 mm and length= 50 mm.

Casting Design

Design of Riser

A riser is used in a sand-casting mold to feed liquid metal to the casting during freezing in order to compensate for **solidification shrinkage**.

To function, the riser must remain molten until the casting solidifies.

Chvorinov's rule can be used to compute the size of a riser that will satisfy this requirement.

Casting Design

Design of Riser

A cylindrical riser is to be designed for a sand casting mold. The length of the cylinder is to be 1.25 times its diameter. The casting is a square plate, each side = 25 cm and thickness =2 cm. If the metal is cast iron, and the mold constant= 6.3 min/cm2 in Chvorinov's rule, determine the dimensions of the riser so that it will take 30% longer for the riser to solidify.

8. Melting Practice

Melting Practices

- The aim in melting is to achieve close control of metal composition, with low melting losses and the avoidance of gas contamination and non-metallic inclusions.
- The choice of practice is governed partly by the composition and quality requirements of the alloy and partly by the nature of the materials forming the charge.
- The final composition of the melt must be developed by controlled refining using slag–metal and gas–metal reactions.

Pouring, cleaning and heat treatment

- The transfer of molten metal is accomplished by ladles of various kinds, sometimes done using crucibles.
- One of the problems in pouring is that oxidized molten metal can be introduced into the mold. Filters are sometimes used
- After the casting has solidified and been removed from the mold, a number of additional steps are usually required.

Step 1 trimming

Step 2 removing the core

Step 3 surfaces cleaning

Step 4 inspection

Step 5 repair

If required, step 6 Heat treatment

FURNACES

The types of furnaces most commonly used in foundries are

1. cupolas,
2. direct fuel-fired furnaces,
3. crucible furnaces,
4. electric-arc furnaces, and
5. induction furnaces.

Selection of the most appropriate furnace type depends on factors such as the casting alloy; its melting and pouring temperatures; capacity requirements of the furnace; costs of investment, operation, and maintenance; and environmental pollution considerations.

Cont…

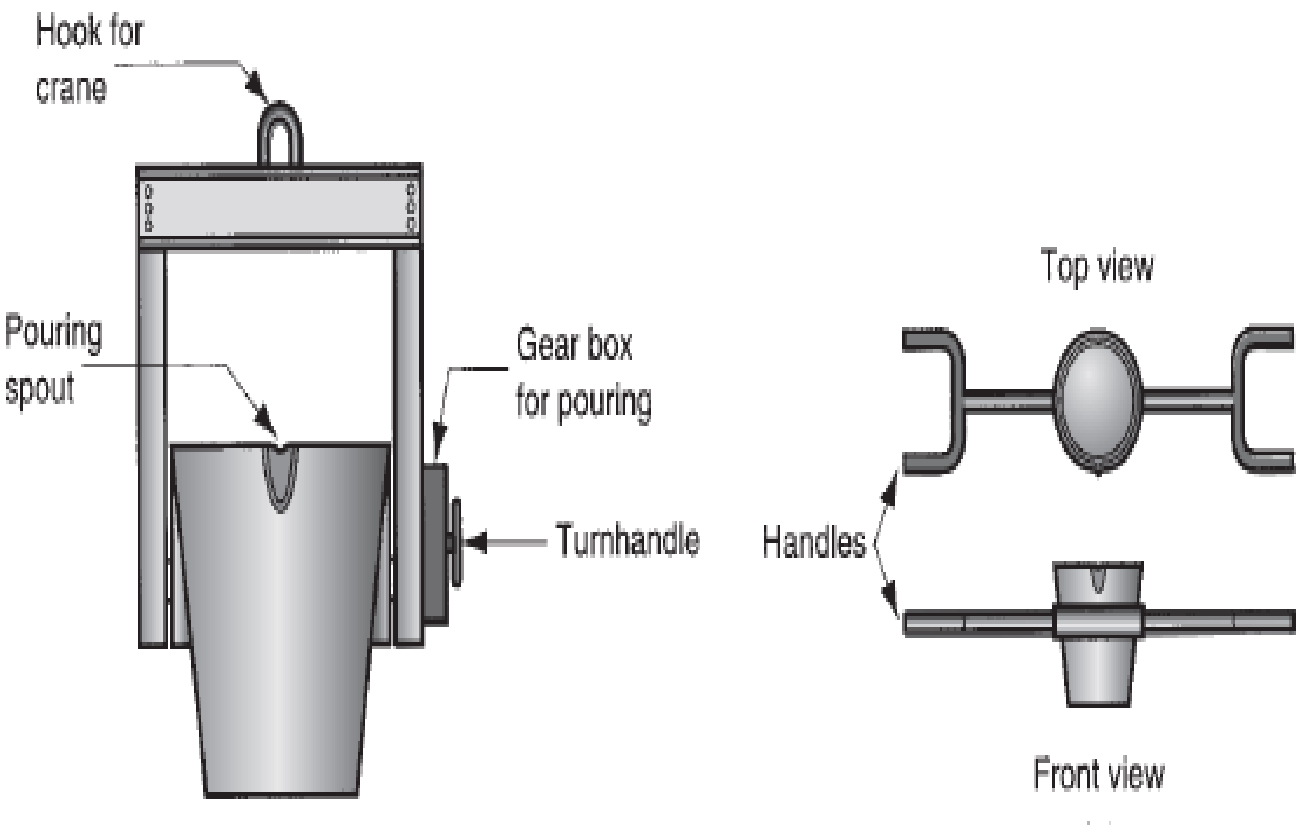

(a) Crane ladle (b) two-man ladle

Pouring the molten metal

- Pouring rate refers to the volumetric rate at which the molten metal is poured into the mold.
- If the rate is too slow, the metal will chill and freeze before filling the cavity.
- If the pouring rate is excessive, turbulence can become a serious problem.
- Turbulence in fluid flow is characterized by erratic variations in the magnitude and direction of the velocity throughout the fluid.
- The flow is agitated and irregular rather than smooth and streamlined, as in laminar flow. Turbulent flow should be avoided during pouring for several reasons.

9. Casting Defects

Defects in castings

- Casting may produce internal defects and surface defects.
- Under practical conditions castings, contain voids, inclusions and other imperfections which contribute to a normal quality variation.
- Production of castings involves a large number of steps including casting design, pattern making, molding, melting, pouring, shake out, fettling, inspection and finishing.

Defects in castings

Defects related with sand molds, designs and solidifications are

1. Misruns and Cold shuts
2. Shrinkage cavity
3. Core shift (mismatch)
4. Inclusions
5. Cuts and Sand wash
6. Scabs
7. Hot tearing etc

1. Misrun and Cold Shut

Cont…

- A cold shut is a defect in which a discontinuity is formed due to the imperfect fusion of two streams of metal in the mold cavity or Cold shut is caused when two streams of metal which are too cold meet but do not fuse together.
- The reasons for cold shut or mis-run may be too thin sections and the wall thickness, the improper gating system, damaged patterns, slow and intermittent pouring, poor fluidity of metal caused by low pouring temperature, improper alloy composition, etc.

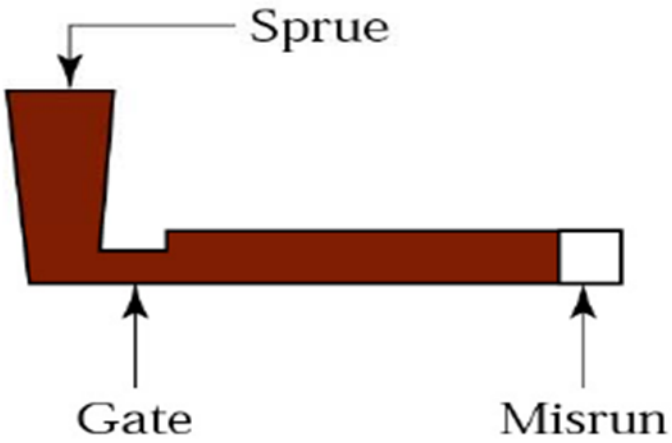

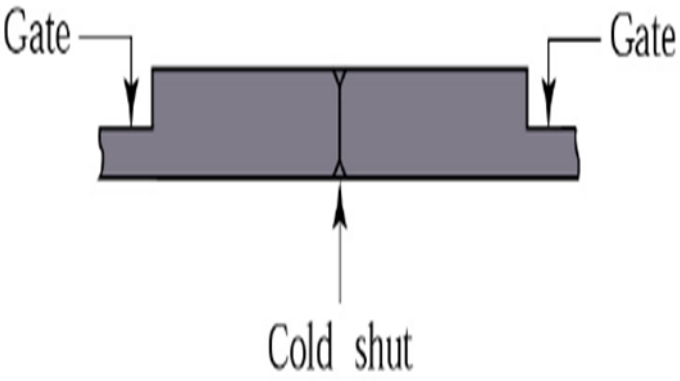

2. Shrinkage cavities

Cont…

- Shrinkage cavities are caused by improper directional solidifications, poor gating systems and poor risering design and inadequate feeding. Therefore the Solidification leads to volumetric contraction which must be compensated by feeding. If this compensation is inadequate either surface shrinkage defects or internal shrinkage defects are produced making the casting weaker.

3. Core Shift (mismatch)

A shift results in a mismatch of the sections of a casting usually as a parting line. Misalignment is common cause of shift. A core shift results from improper support or location of a core. Therefore it results in a faulty cavity or hole in the casting.

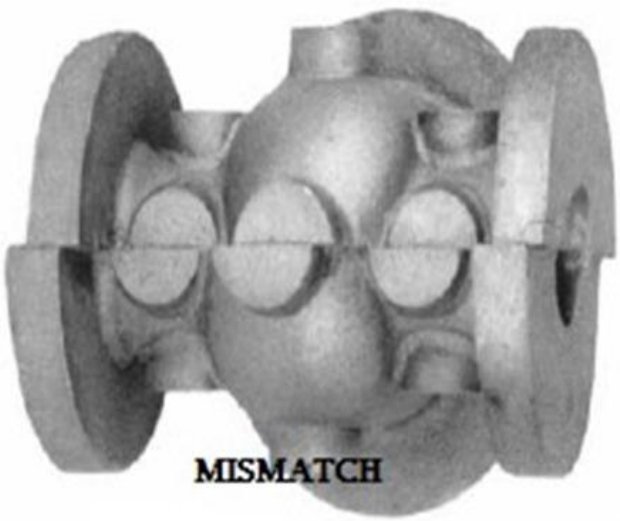

4. Inclusions (porosity)

- Porosity is a phenomenon that occurs in materials, especially castings, as they change from liquid state to solid during the manufacturing process.
- Inclusions are any foreign materials present in the cast metal. These may be in the form of oxides, slag, dirt, sand or nails.

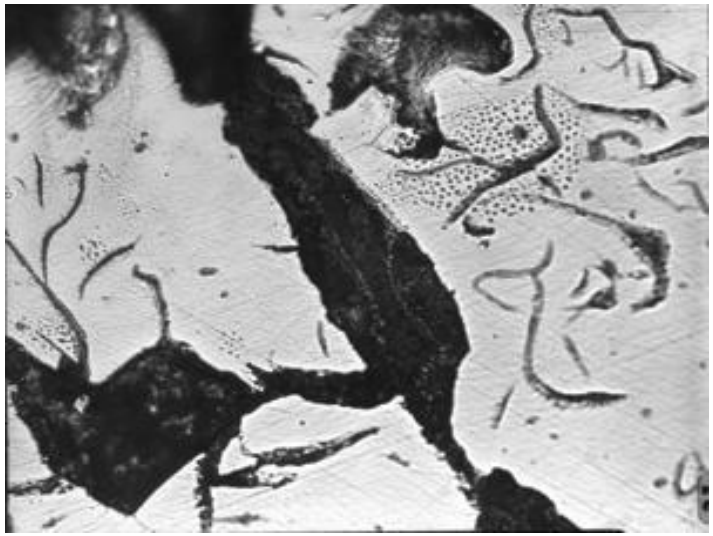

Inclusions

Cont…

5. Cuts and Washes

The cuts and washes are defects in castings and it is a low projection on the drag surface of a casting commencing near the gate. It is caused by the erosion of sand due to high velocity liquid metal; it is also caused by erosion of mould and core surfaces by the metal flowing in the mould cavity.

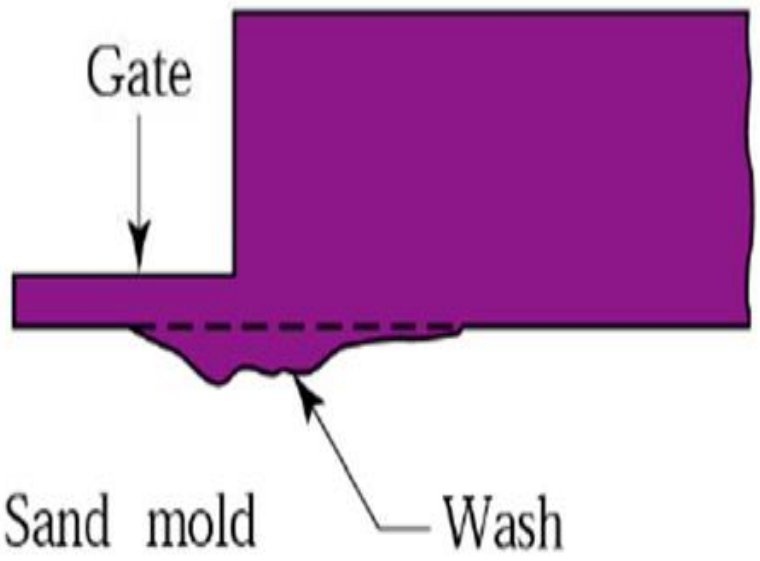

6. Hot tears

Cont…

- Hot tears are internal or external ragged (worn out) discontinuities or cracks on the casting surface, caused by rapid contraction occurring immediately after the metal solidified.

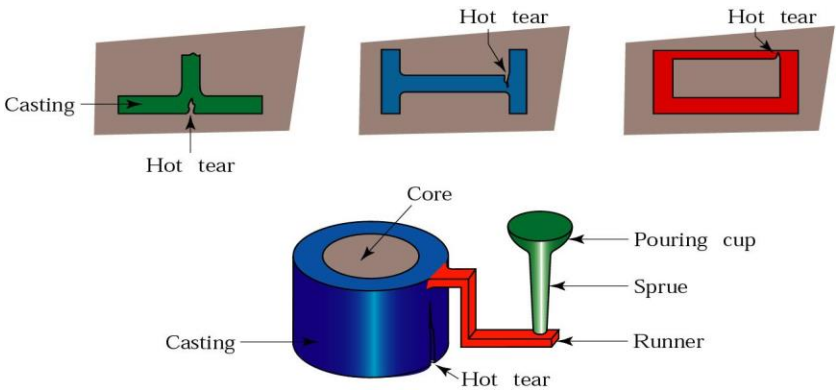

- They may be produced when the casting is poorly designed and abrupt sectional changes take place; having **no proper fillets and corner radii are provided**