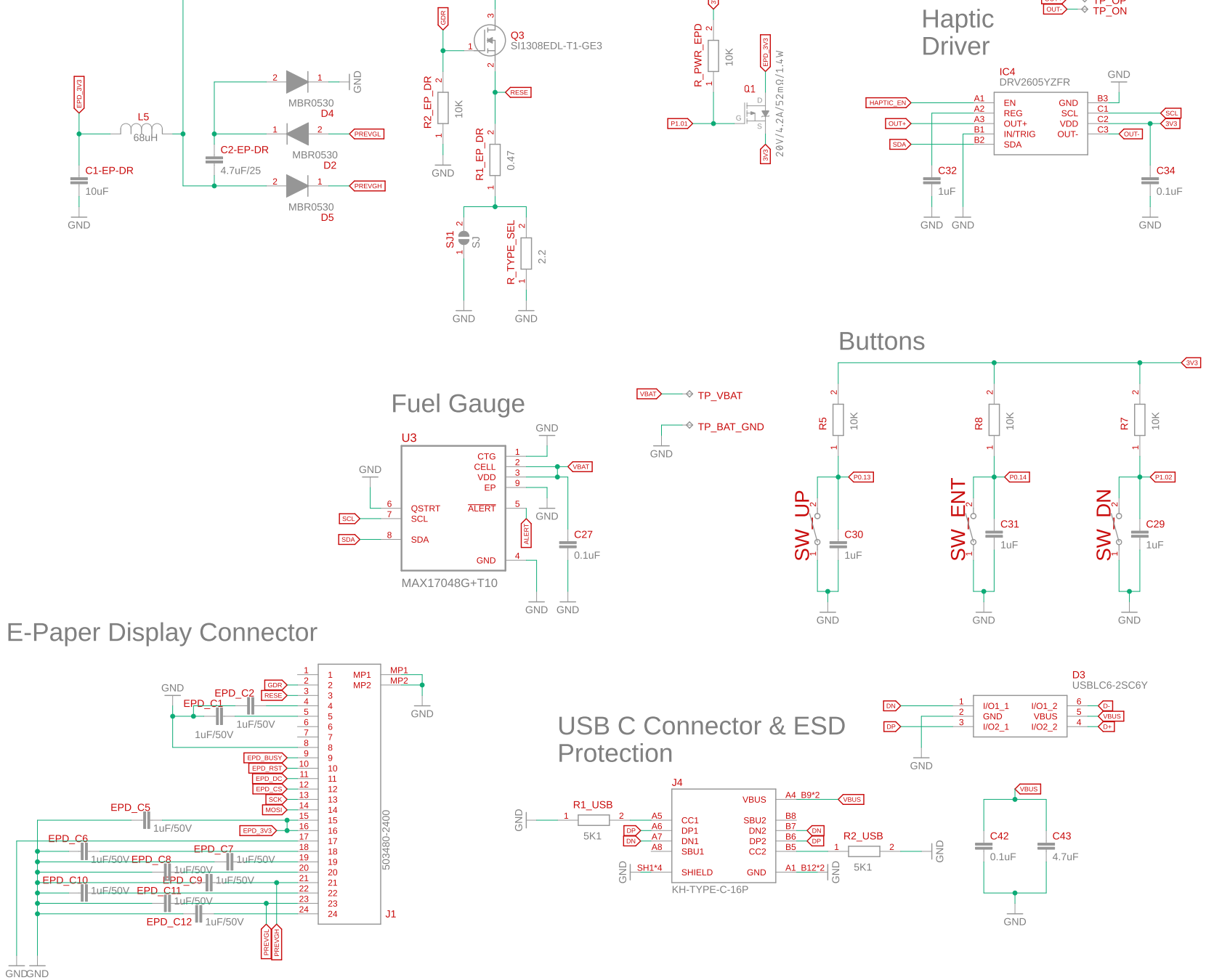
Haptic Driver
IC4
DRV2605YZFR
HAPTIC_EN
OUT+
SDA
EN
REG
OUT+
IN/TRIG
SDA
GND
SCL
VDD
OUT-
B3
C1
C2
C3
SCL
3V3
OUT-
C32
1uF
C34
0.1uF
TP_OP
TP_ON
Q3
SI1308EDL-T-GE3
GDR
RESE
R2_EP_DR
10K
R1_EP_DR
0.47
SJ1
SJ
R_TYPE_SEL
2.2
R_PWR_EPD
10K
Q1
P1.01
EPD_3V3
20V/4.2A/52mΩ/1.4W
L5
68uH
C1-EP-DR
10uF
C2-EP-DR
4.7uF/25
MBR0530
D4
D2
D5
PREVGL
PREVGH
Buttons
R5
R8
R7
10K
P0.13
P0.14
P1.02
SW_UP
SW_ENT
SW_DN
C30
C31
C29
1uF
Fuel Gauge
U3
CTG
CELL
VDD
EP
QSTRT
SCL
SDA
ALERT
GND
VBAT
C27
0.1uF
MAX17048G+T10
TP_VBAT
TP_BAT_GND
E-Paper Display Connector
MP1
MP2
EPD_C1
EPD_C2
1uF/50V
EPD_BUSY
EPD_RST
EPD_DC
EPD_CS
SCK
MOSI
EPD_3V3
EPD_C5
EPD_C6
EPD_C7
EPD_C8
EPD_C9
EPD_C10
EPD_C11
EPD_C12
503480-2400
J1
USB C Connector & ESD Protection
D3
USBLC6-2SC6Y
I/O1_1
GND
I/O2_1
I/O1_2
VBUS
I/O2_2
DN
DP
D-
D+
J4
R1_USB
5K1
R2_USB
CC1
DP1
DN1
SBU1
SHIELD
SBU2
DN2
DP2
CC2
A4_B9*2
A1_B12*2
SH1*4
KH-TYPE-C-16P
C42
0.1uF
C43
4.7uF

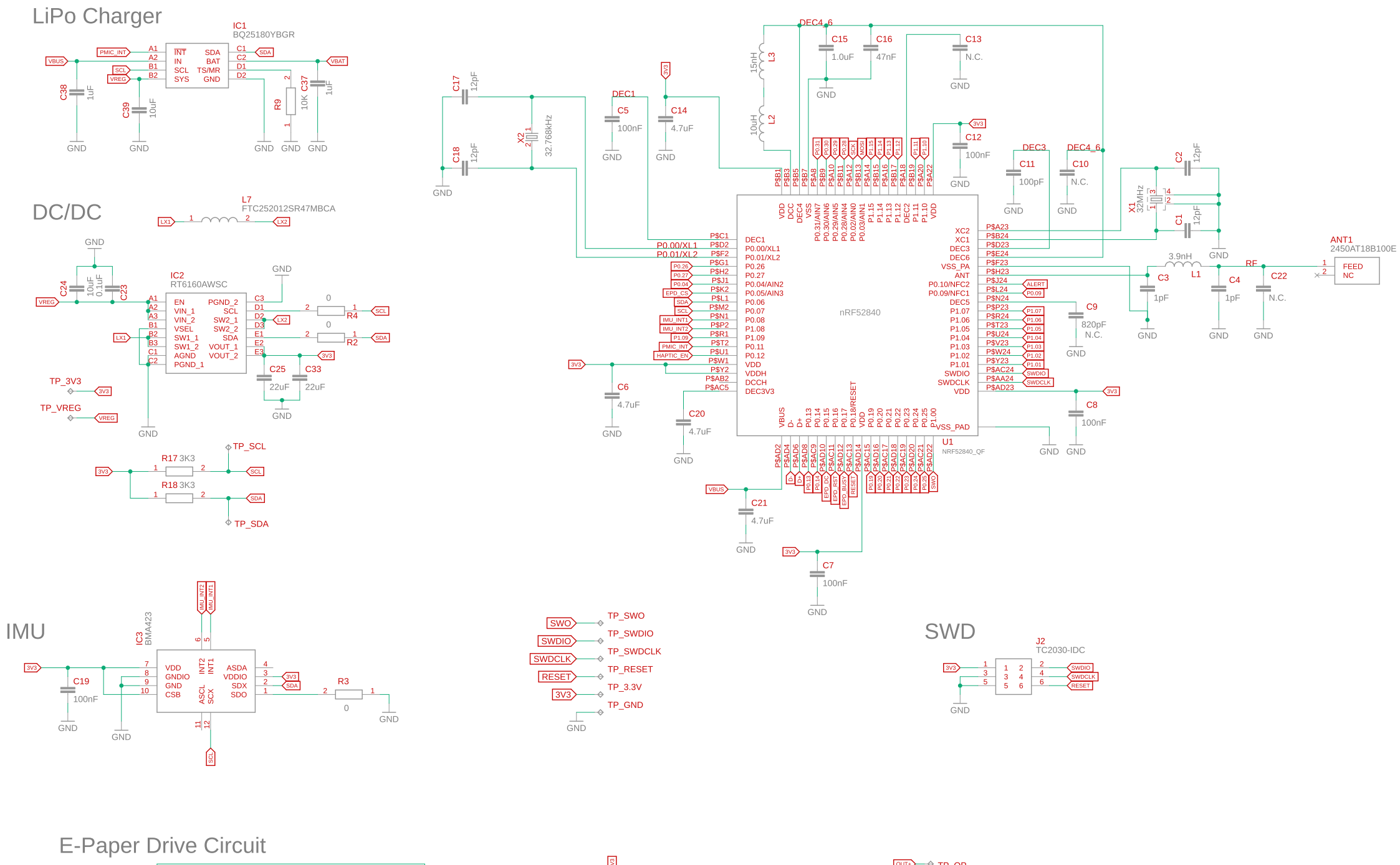
LiPo Charger
IC1
BQ25180YBGR
DC/DC
L7
FTC252012SR47MBCA
IC2
RT6160AWSC
TP_3V3
TP_VREG
R17 3K3
R18 3K3
TP_SCL
TP_SDA
IMU
IC3
BMA423
E-Paper Drive Circuit
nRF52840
U1
NRF52840_QF
ANT1
2450AT18B100E
FEED
NC
TP_SWO
TP_SWDIO
TP_SWDCLK
TP_RESET
TP_3.3V
TP_GND
SWD
J2
TC2030-IDC