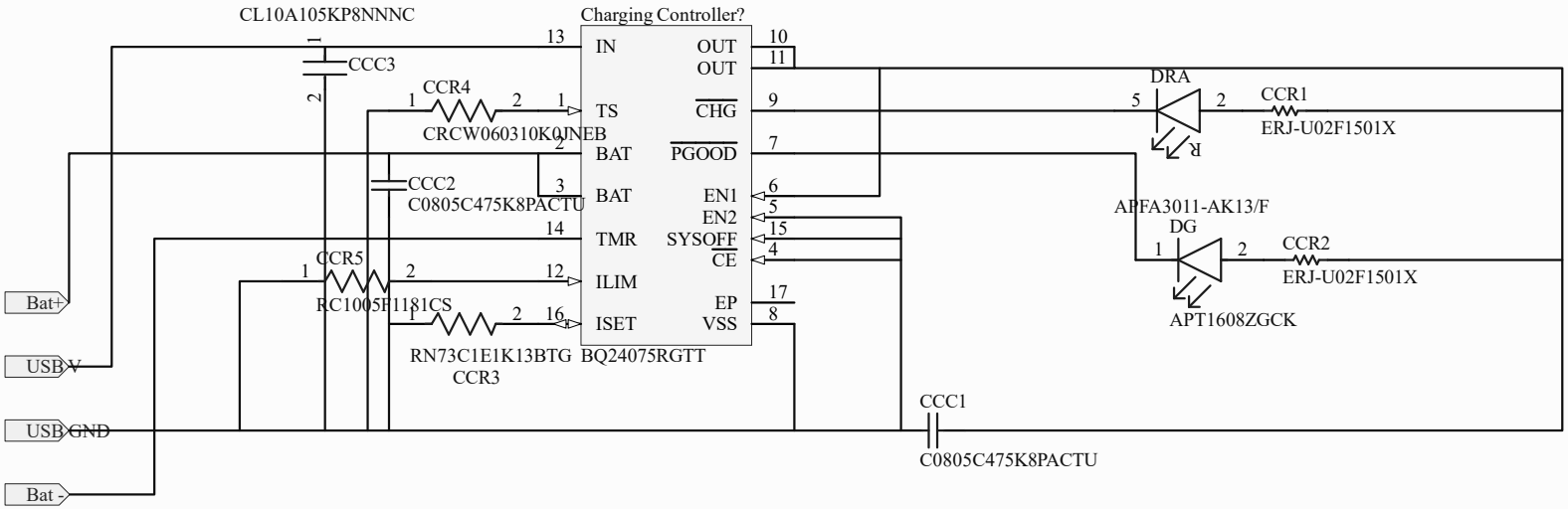

Title		
Size A	Number	Revision
Date: 3/07/2021		Sheet of
File: C:\Users\..\Charging.SchDoc		Drawn By: