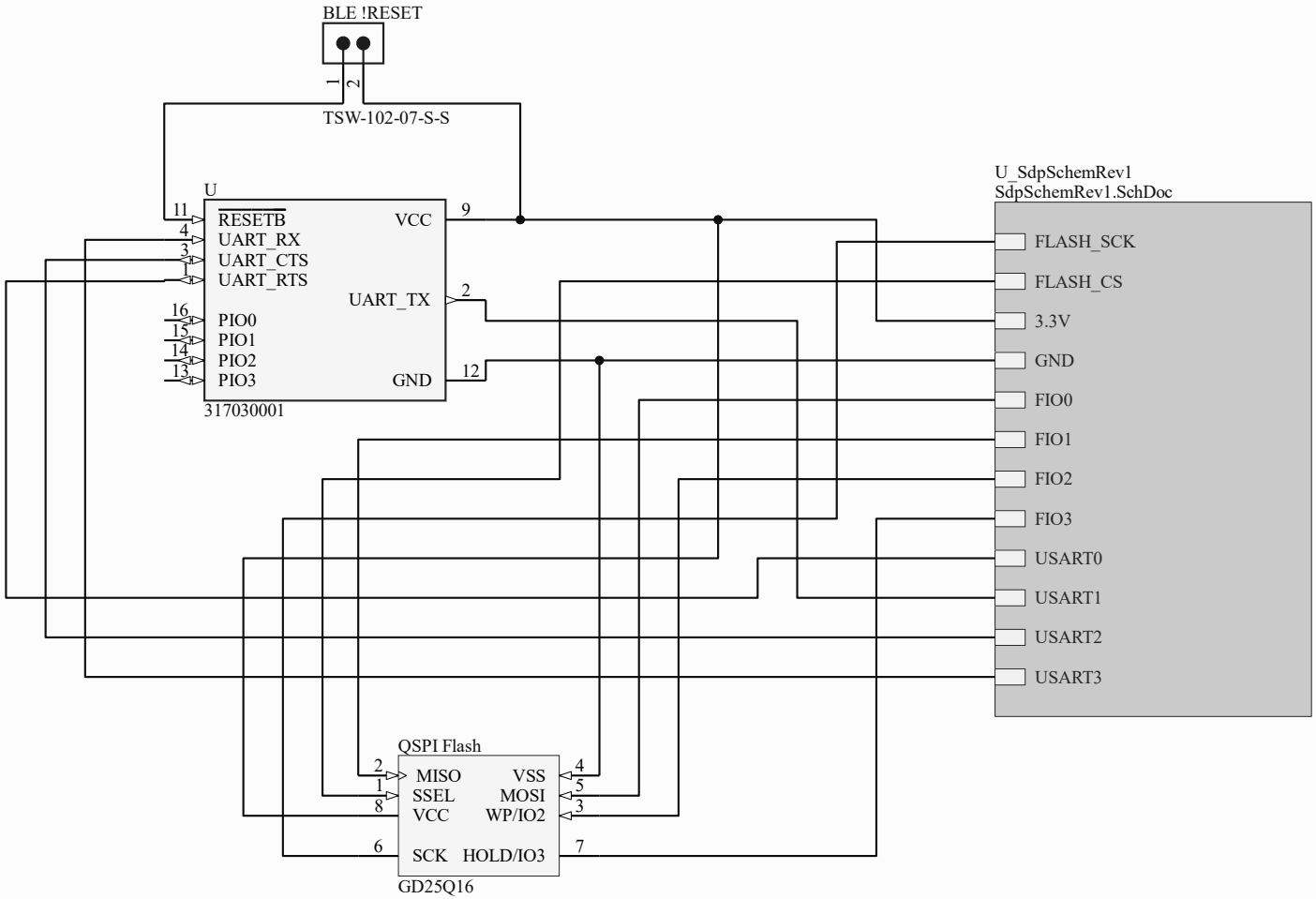

Title	Shiver-ring	
Size A	Number	Revision
Date: 2/14/2021		Sheet of
File: C:\Users\..\Sheet1.SchDoc		Drawn By: Connor Loughman