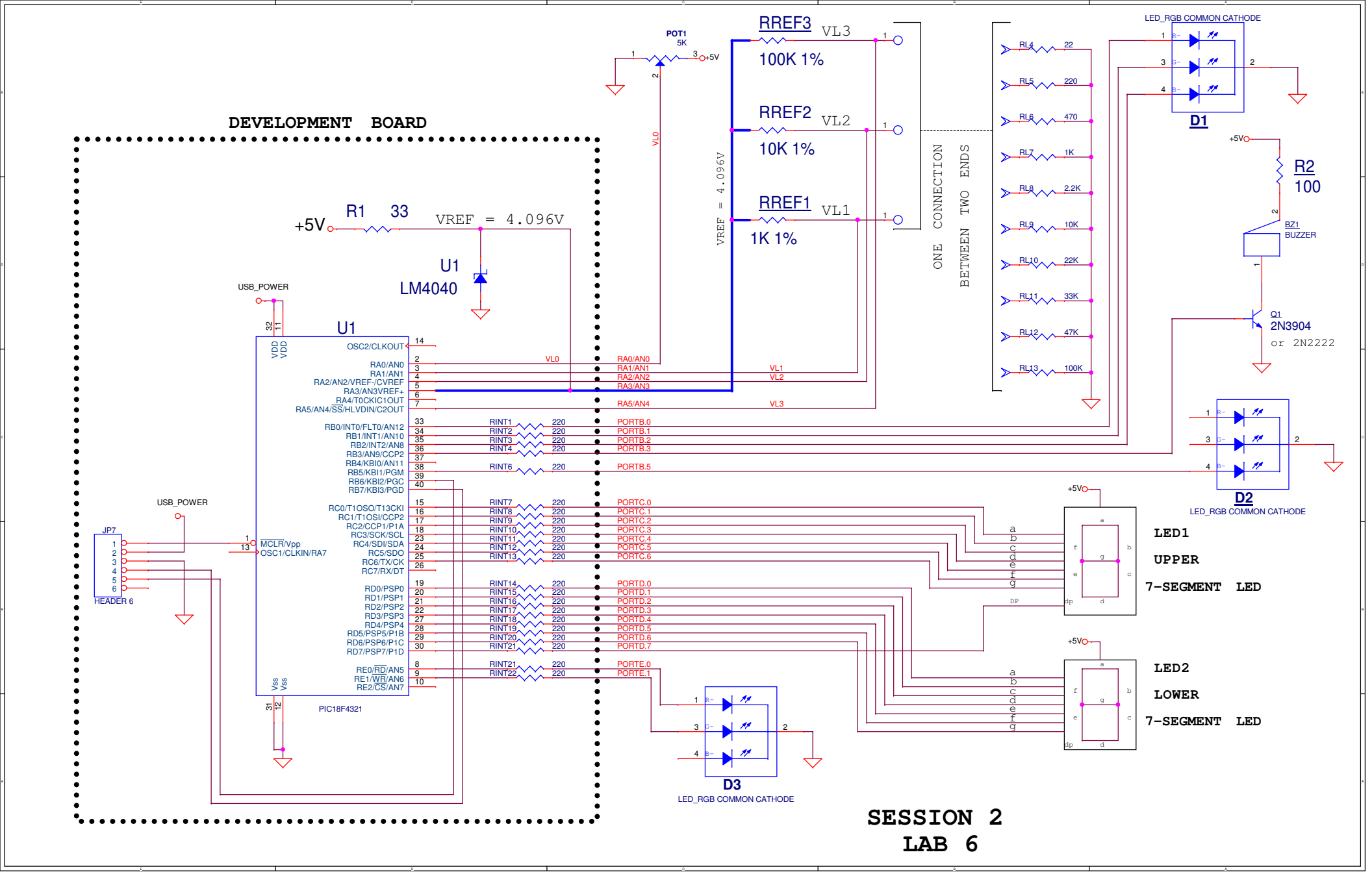
DEVELOPMENT BOARD
+5V
R1 33
VREF = 4.096V
U1
LM4040
USB_POWER
U1
PIC18F4321
JP7
HEADER 6
POT1
5K
RREF3
100K 1%
RREF2
10K 1%
RREF1
1K 1%
VL3
VL2
VL1
VL0
VREF = 4.096V
ONE CONNECTION BETWEEN TWO ENDS
RL4 22
RL5 220
RL6 470
RL7 1K
RL8 2.2K
RL9 10K
RL10 22K
RL11 33K
RL12 47K
RL13 100K
LED_RGB COMMON CATHODE
D1
R2
100
BZ1
BUZZER
Q1
2N3904
or 2N2222
D2
LED1
UPPER
7-SEGMENT LED
LED2
LOWER
7-SEGMENT LED
D3
LED_RGB COMMON CATHODE
SESSION 2
LAB 6