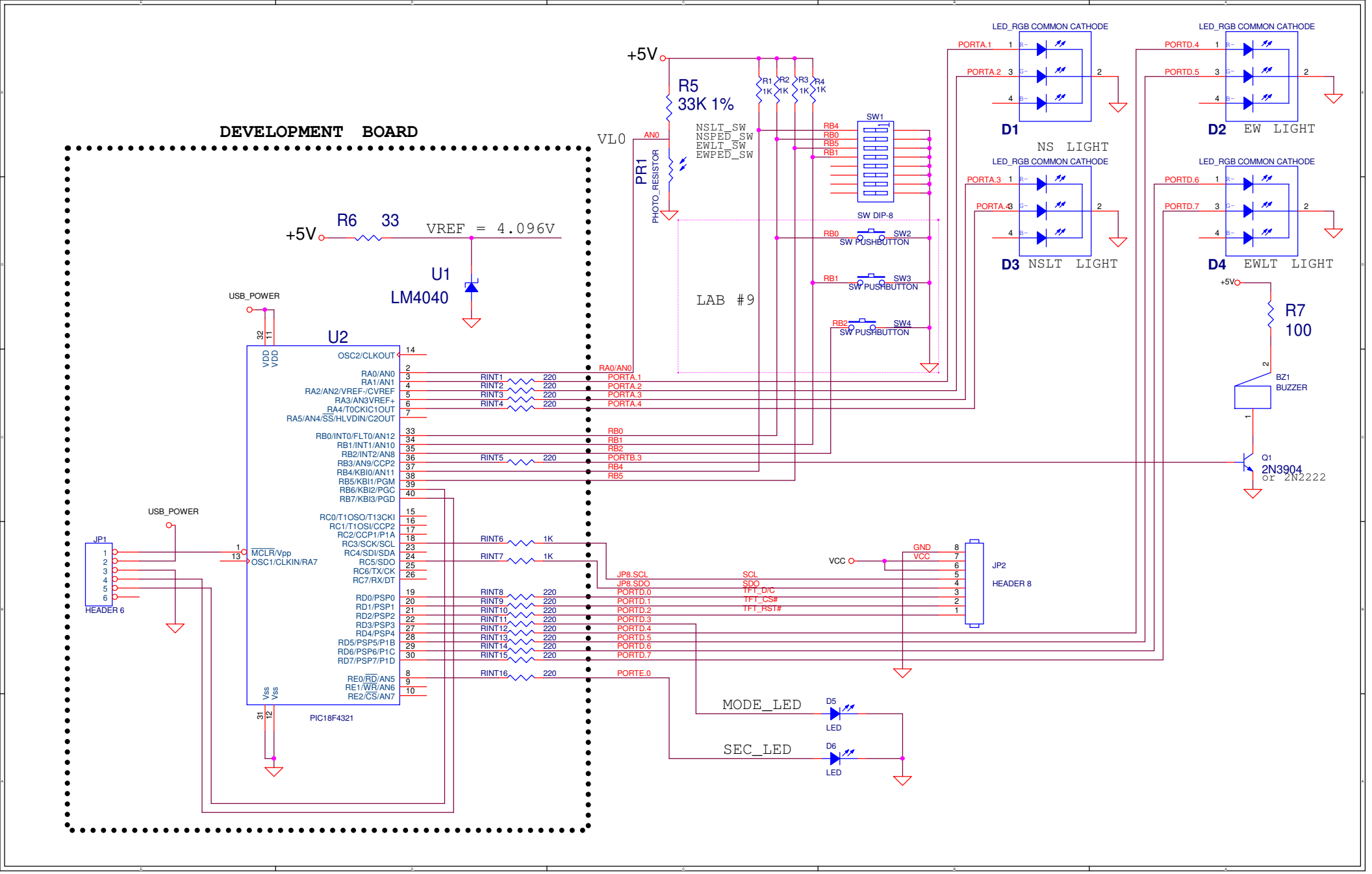
DEVELOPMENT BOARD
+5V
R6 33
VREF = 4.096V
U1
LM4040
USB_POWER
U2
PIC18F4321
JP1
HEADER 6
USB_POWER
+5V
R5
33K 1%
VL0
AN0
PR1
PHOTO_RESISTOR
R1 1K
R2 1K
R3 1K
R4 1K
NSLT_SW
NSPED_SW
EWLT_SW
EWPED_SW
SW1
SW DIP-8
SW2
SW PUSHBUTTON
SW3
SW PUSHBUTTON
SW4
SW PUSHBUTTON
LAB #9
LED_RGB COMMON CATHODE
D1
NS LIGHT
D2
EW LIGHT
D3
NSLT LIGHT
D4
EWLT LIGHT
R7
100
BZ1
BUZZER
Q1
2N3904
or 2N2222
JP2
HEADER 8
VCC
GND
SCL
SDO
TFT_D/C
TFT_CS#
TFT_RST#
MODE_LED
D5
LED
SEC_LED
D6
LED