Dispersion

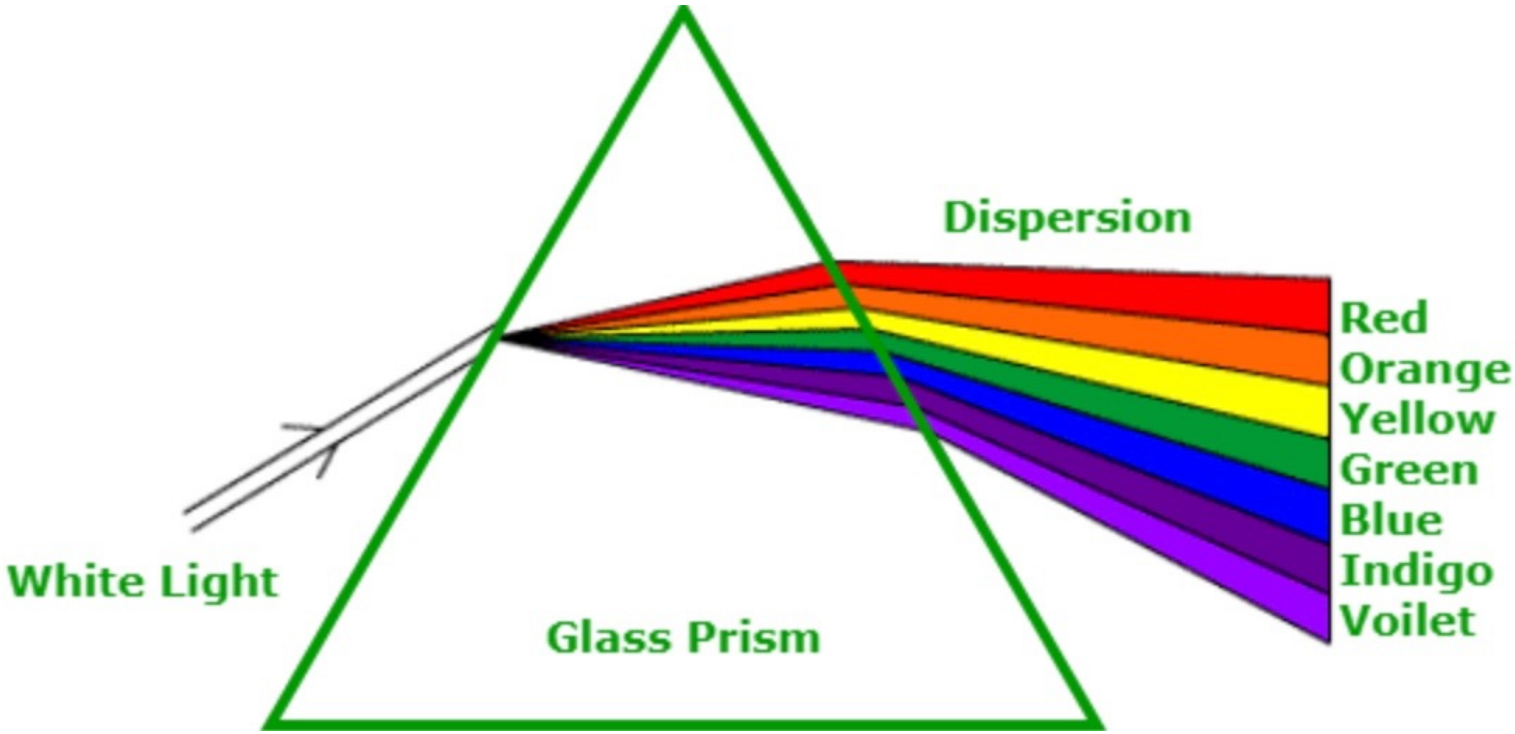

Variation of refractive index with wavelength

Dispersion (optical fiber)

Dispersion in an optical fiber (spreading of pulse over time)

Dispersion (optical fiber)

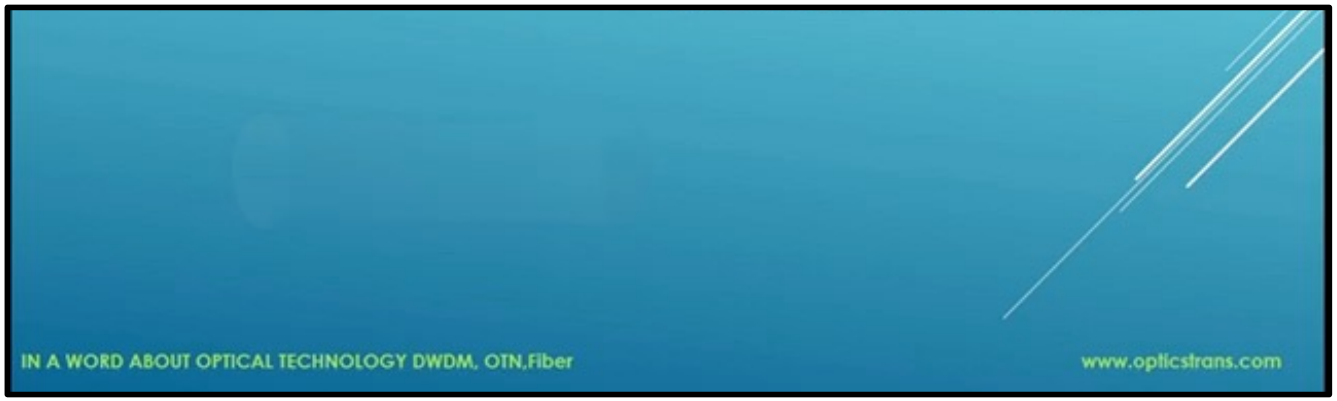

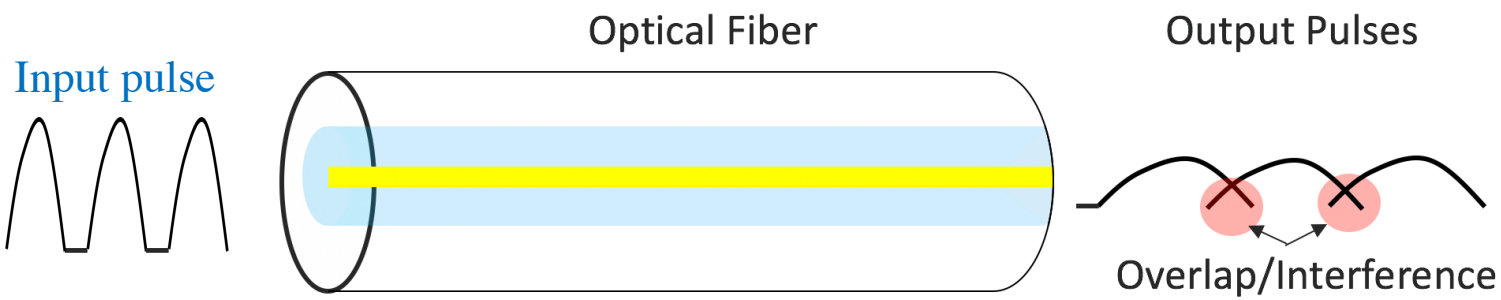

Dispersion types

1. Intramodal dispersion (Single and multimode fiber)
2. Intermodal dispersion (Multimode fiber)

Intramodal dispersion

Dispersion within a mode

- Chromatic or material dispersion
- different wavelength travels with different speed

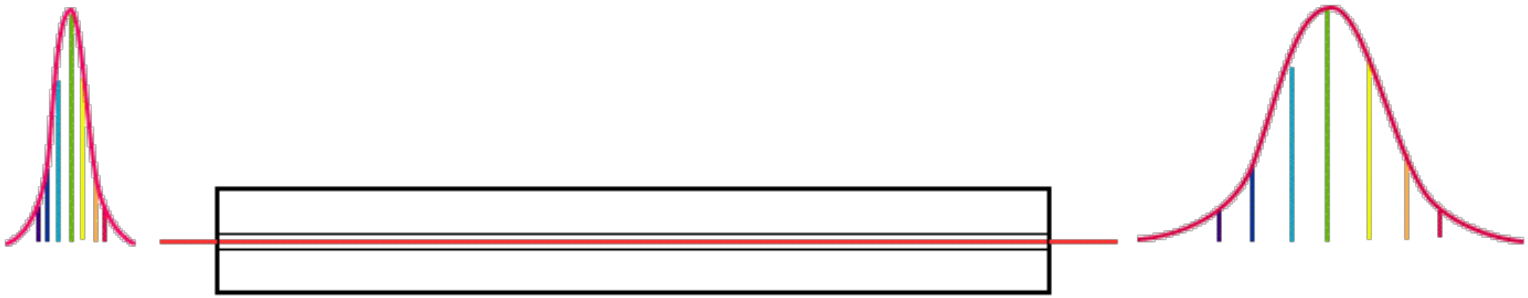

Intermodal dispersion

Dispersion among different modes

- lower order modes travel less distance within core (travel near to core center)
- higher order modes travel larger distance within core (travel away from the core center)

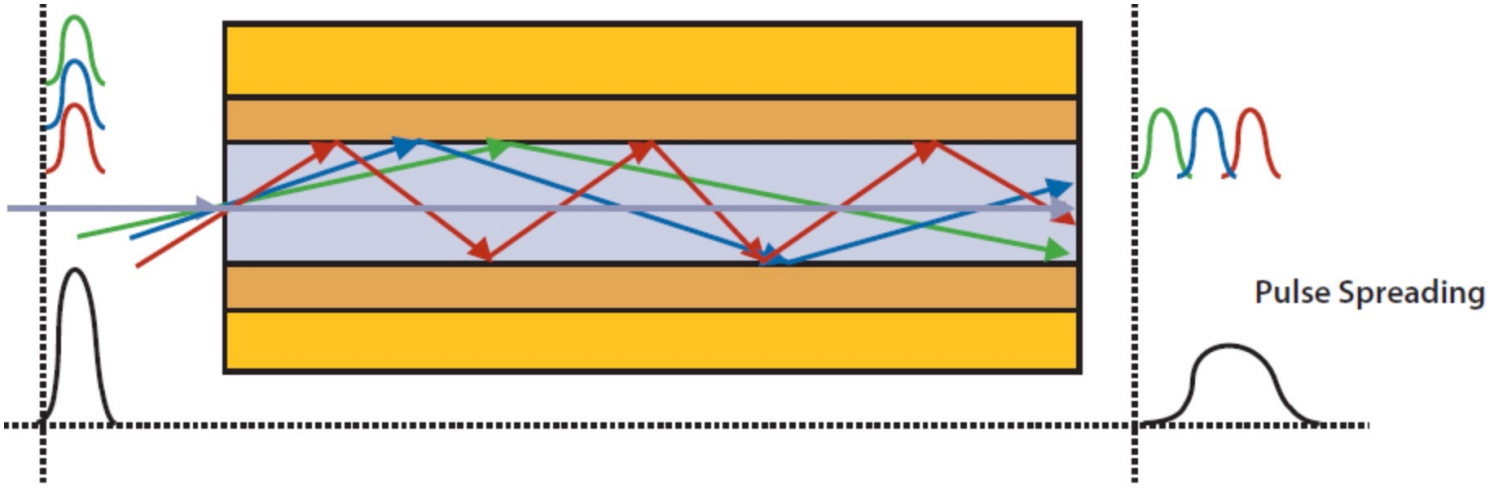

Modal dispersion in step-index multimode fiber

Dispersion in graded index fiber

Lower order modes

- travel less distance within core with lower speed

- (core refractive index is more at center)

Higher order modes

- travel larger distance within core with higher speed

- (core refractive index is less away from the center)

Intermodal dispersion is compensated in graded index fiber

Intermodal dispersion (Step index multimode fiber) > **Intermodal dispersion (graded index multimode fiber)**

V parameter (Normalized cut off frequency)

- Normalized frequency parameter, which determines the number of modes of a step-index fiber.
- V number is a dimensionless parameter.

The number of modes can be characterized by the normalized frequency

$$V = \frac{2\pi}{\lambda} a \sqrt{n_1^2 - n_2^2}$$

Most standard optical fibers are characterized by their numerical aperture

$$NA = \sqrt{n_1^2 - n_2^2}$$

Normalized frequency is related to numerical aperture

$$V = \frac{2\pi}{\lambda} a \; NA$$

If **V < 2.405**	-	Single mode / mono-mode fiber
If **V > 2.405**	-	Multimode fiber

The maximum number of modes that propagated through a multimode fiber is given by

$$N_m = \frac{V^2}{2} \quad \text{(For step-index fibers)}$$

$$N_m = \frac{V^2}{4} \quad \text{(For graded-index fibers)}$$

Attenuation in optical fiber

- Attenuation is the reduction in power of the light signal as it is transmitted.
- Total attenuation is the sum of all losses.
- Optical losses of a fiber are usually expressed in decibels per kilometer (dB/km).

$$\alpha = \frac{10}{L}\log_{10}\frac{P_i}{P_0}$$

Input power

Output power

Attenuation coefficient

Length of fiber

Optical Fiber Loss Mechanisms

1. Absorption loss

- intrinsic (material of which fiber is made)
- extrinsic (due to impurities present in base material)

2. Scattering loss

- Rayleigh scattering
- Mie scattering

3. Macrobending loss

- large radius of curvature relative to the fiber diameter (large bends)

4. Microbending loss

- small-scale bends in the core-cladding interface

Windows	Wavelength	Loss
1st wavelength	850nm	3dB/km
2nd wavelength	1310nm	0.4dB/km
3rd wavelength	1550nm	0.2dB/km

Fiber - Optic communication

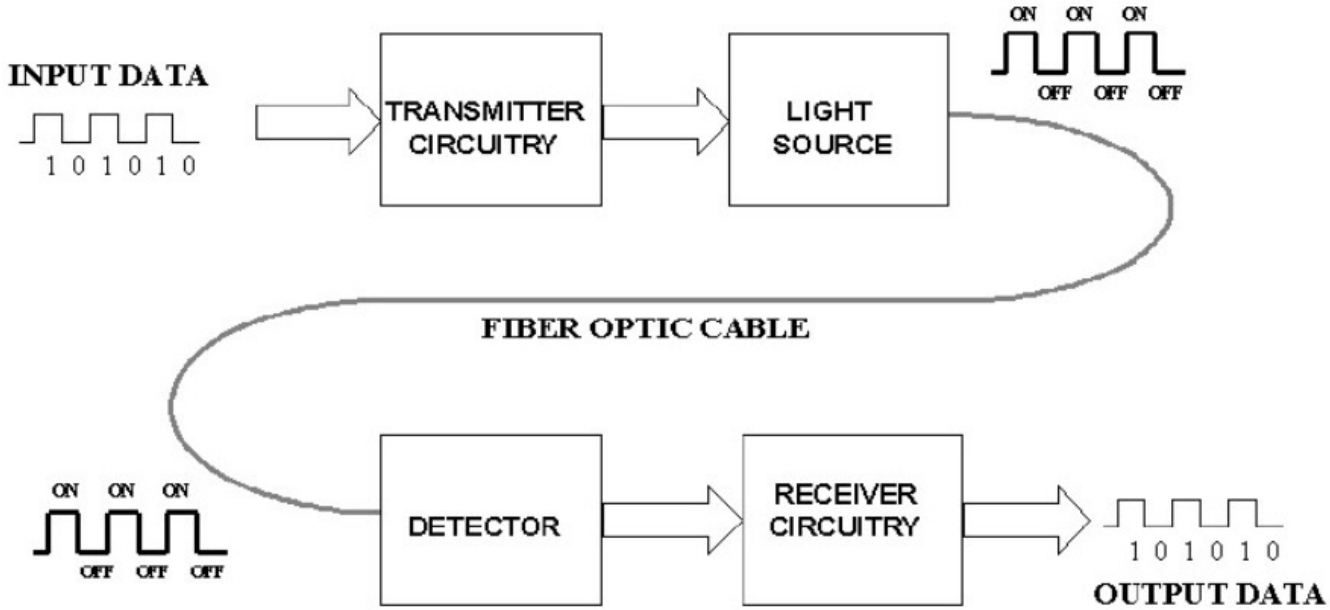

Working of Fiber-optic communication

Input data, in the form of electrical signals, is given to the transmitter circuitry, it converts them into a light signal with the help of a light source. The light beam from the source is carried by a fiber optic cable to the destination circuitry where the information is transmitted back to the electrical signal by a receiver circuit. The Receiver circuit consists of a photodetector along with an appropriate electronic circuit, which is capable of measuring the magnitude, frequency, and phase of the optic field. This type of communication uses the wavelengths near the infra band that is just above the visible range. Both LED and Laser can be used as light sources based on the application.