Microcontroller

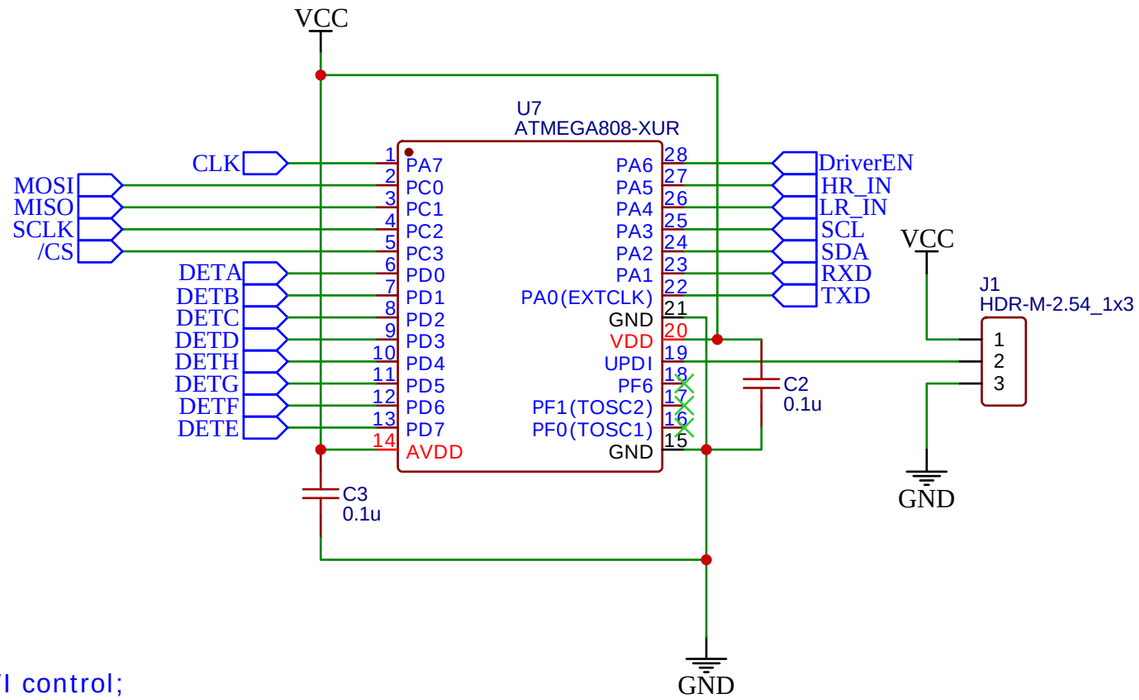

Header for testing SPI, UART and TWI control; UART access for serial communication

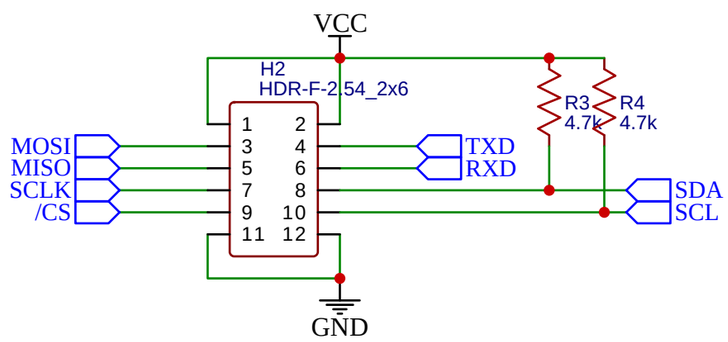

Headers for position detection

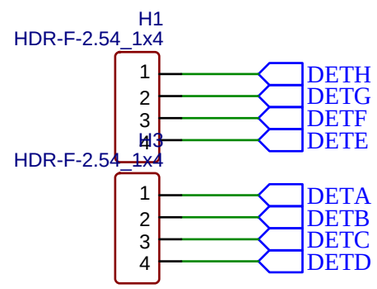

TITLE: Microcontroller		REV: 1.0
	Company: N/A	Sheet: 1/1
	Date: 2023-01-09 Drawn By: Amar Persaud	

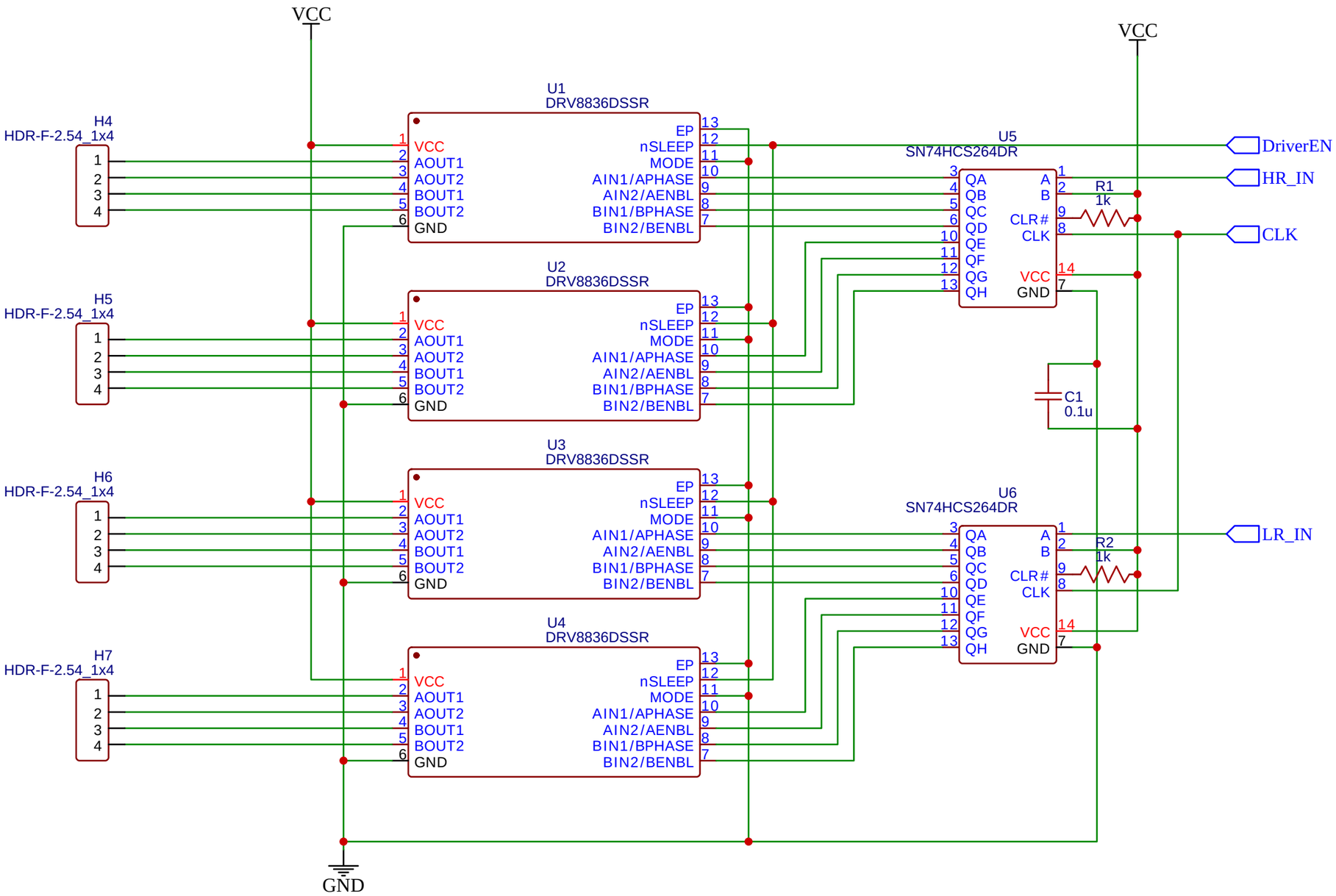

TITLE: Solenoid Drivers		REV: 1.0
	Company: N/A	Sheet: 1/1
	Date: 2023-01-09 Drawn By: Amar Persaud	