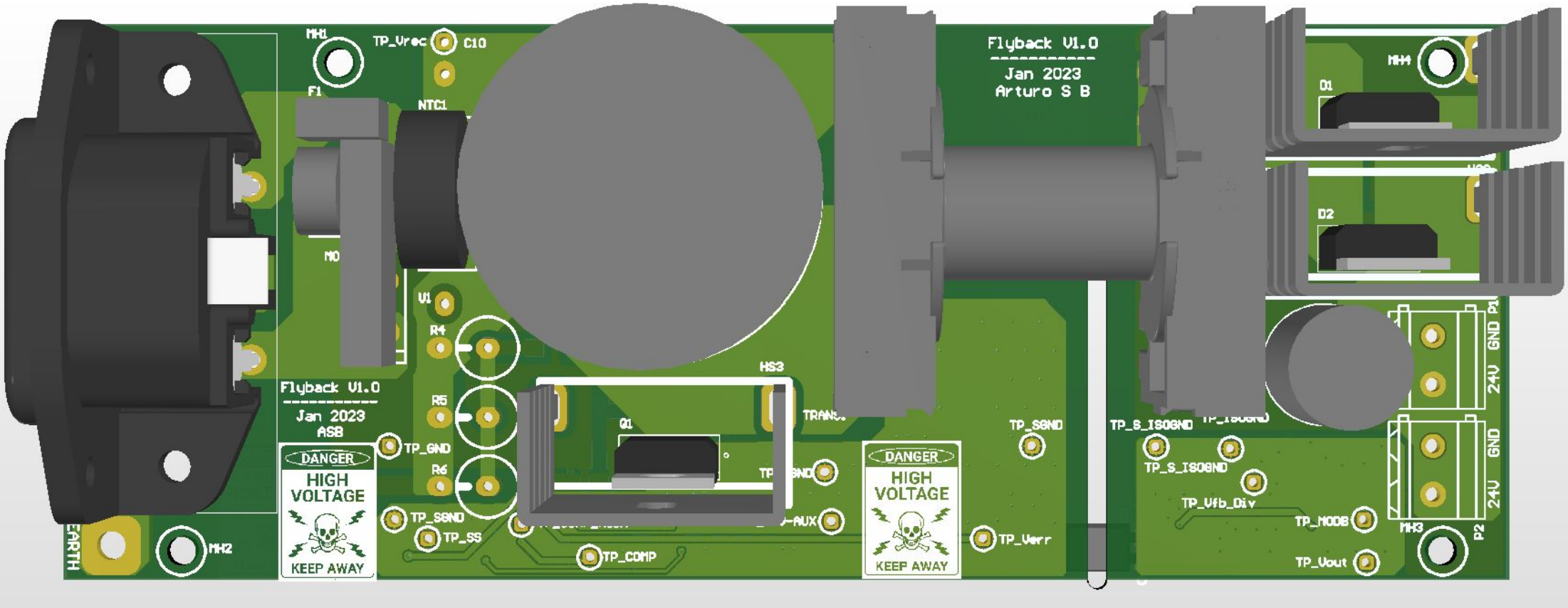
MH1
TP_Vrec
C10
F1
NTC1
M0
V1
R4
R5
R6
Flyback V1.0
Jan 2023
ASB
TP_GND
DANGER
HIGH
VOLTAGE
KEEP AWAY
TP_SGND
TP_SS
EARTH
MH2
Q1
HS3
TRAN.
TP_COMP
TP_SGND
TP_Verr
Flyback V1.0
Jan 2023
Arturo S B
MH4
D1
D2
TP_S_ISOGND
TP_Vfb_Div
TP_MODE
TP_Vout
MH3
P2
24V
GND
P1

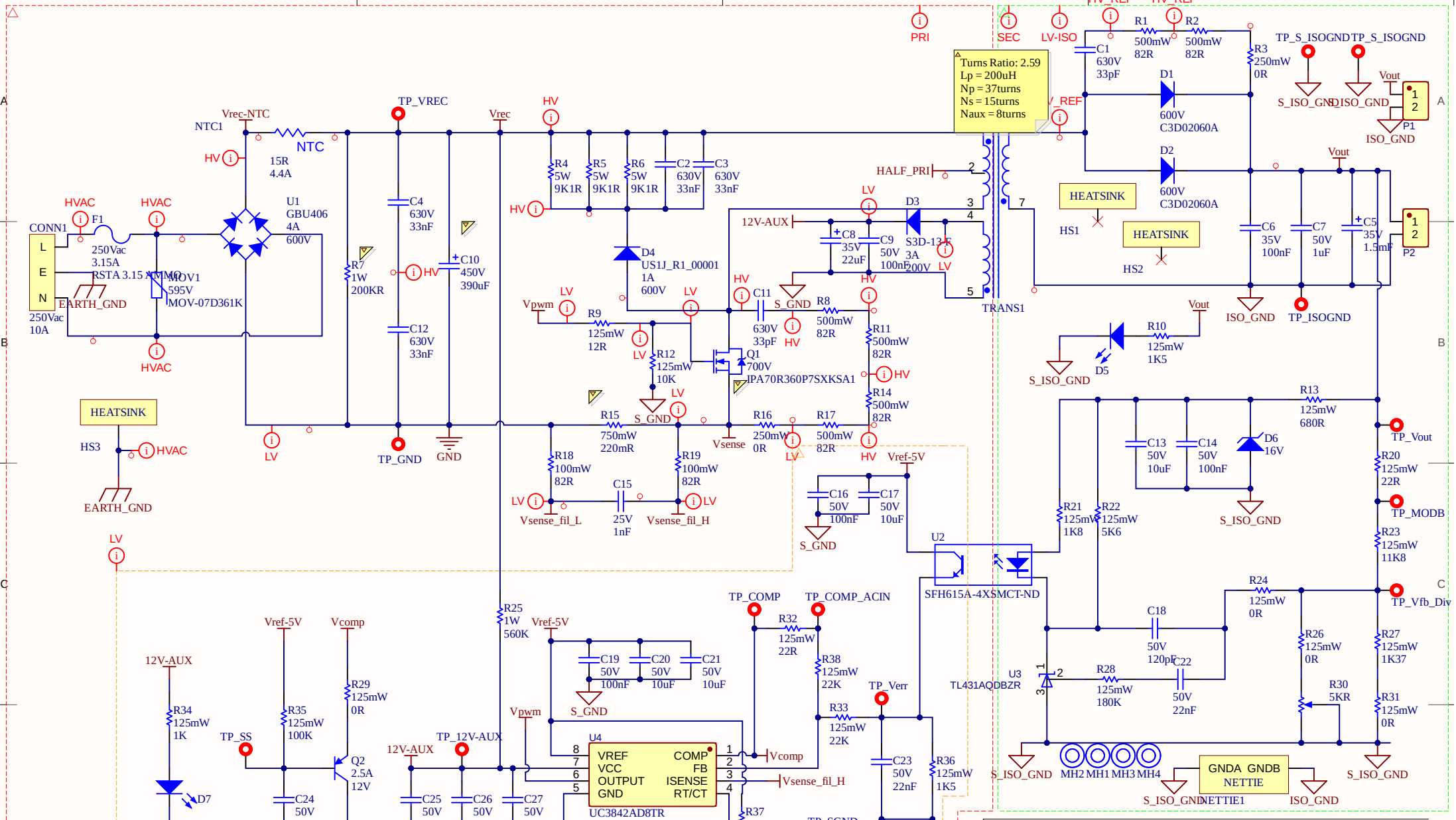

Title		
Flyback converter V1.0		
Size: A4	Number	Revision: V1.0
Date: 6/02/2023		Sheet of
File: C:\Users\..\FlybackV1.0.SchDoc		Drawn By: Arturo S. Bayangos

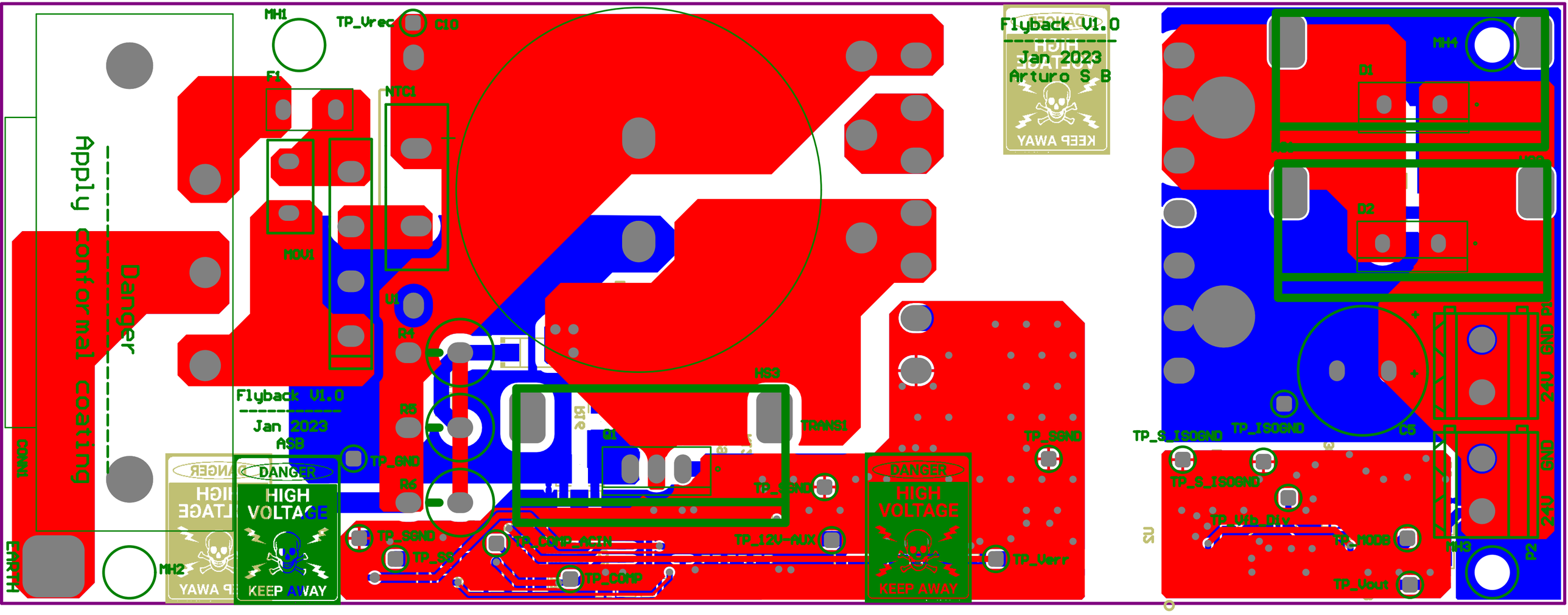
MH1
TP_Vrec
C10
F1
NTC1
MOV1
U1
R4
R5
R6
Flyback V1.0
Jan 2023
ASB
TP_GND
Apply conformal coating
Danger
CONN1
EARTH
MH2
DANGER
HIGH VOLTAGE
KEEP AWAY
YAWA
MS3
TRANS1
Q1
TP_SGND
TP_S
TP_COMP_ACIN
TP_COMP
TP_12V-AUX
TP_Verr
Flyback V1.0
Jan 2023
Arturo S B
MH4
D1
D2
C5
TP_S_ISOGND
TP_ISOGND
TP_Vb_DIV
TP_MOD3
TP_Vout
24V
GND
MH3

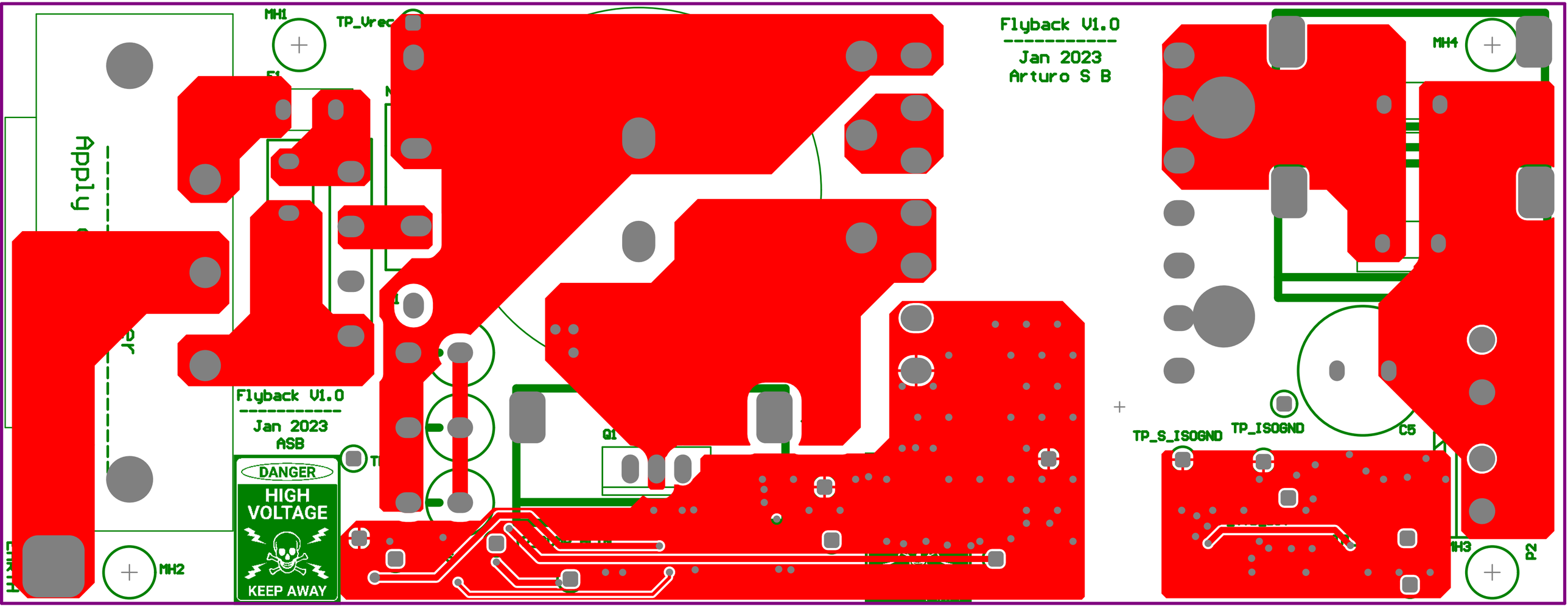
MH1
TP_Vrec
Flyback V1.0
Jan 2023
Arturo S B
MH4
Apply
Jr
Flyback V1.0
Jan 2023
ASB
DANGER
HIGH VOLTAGE
KEEP AWAY
Q1
TP_S_ISOGND
TP_ISOGND
C5
MH3
P2
MH2

DANGER
HIGH
VOLTAGE
KEEP AWAY
DANGER
HIGH
VOLTAGE
KEEP AWAY