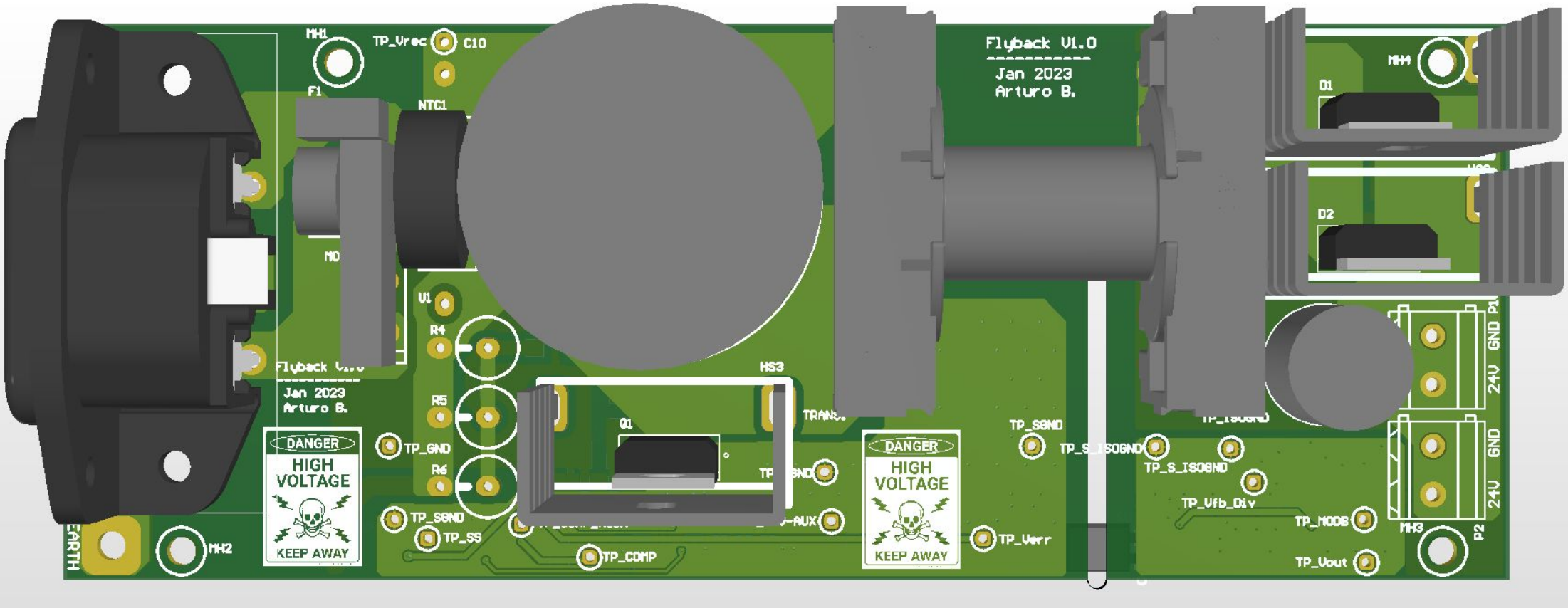
Flyback V1.0
Jan 2023
Arturo B.
MH1
TP_Vrec
C10
F1
NTC1
MO
U1
R4
R5
R6
TP_GND
TP_SGND
TP_SS
TP_COMP
Q1
HS3
TRANS.
DANGER
HIGH VOLTAGE
KEEP AWAY
EARTH
MH2
TP_SGND
TP_S_ISOGND
TP_S_ISOGND
TP_Vfb_Div
TP_MODE
TP_Vout
TP_Verr
MH4
D1
D2
MH3
P1
P2
GND
24V
GND
24V

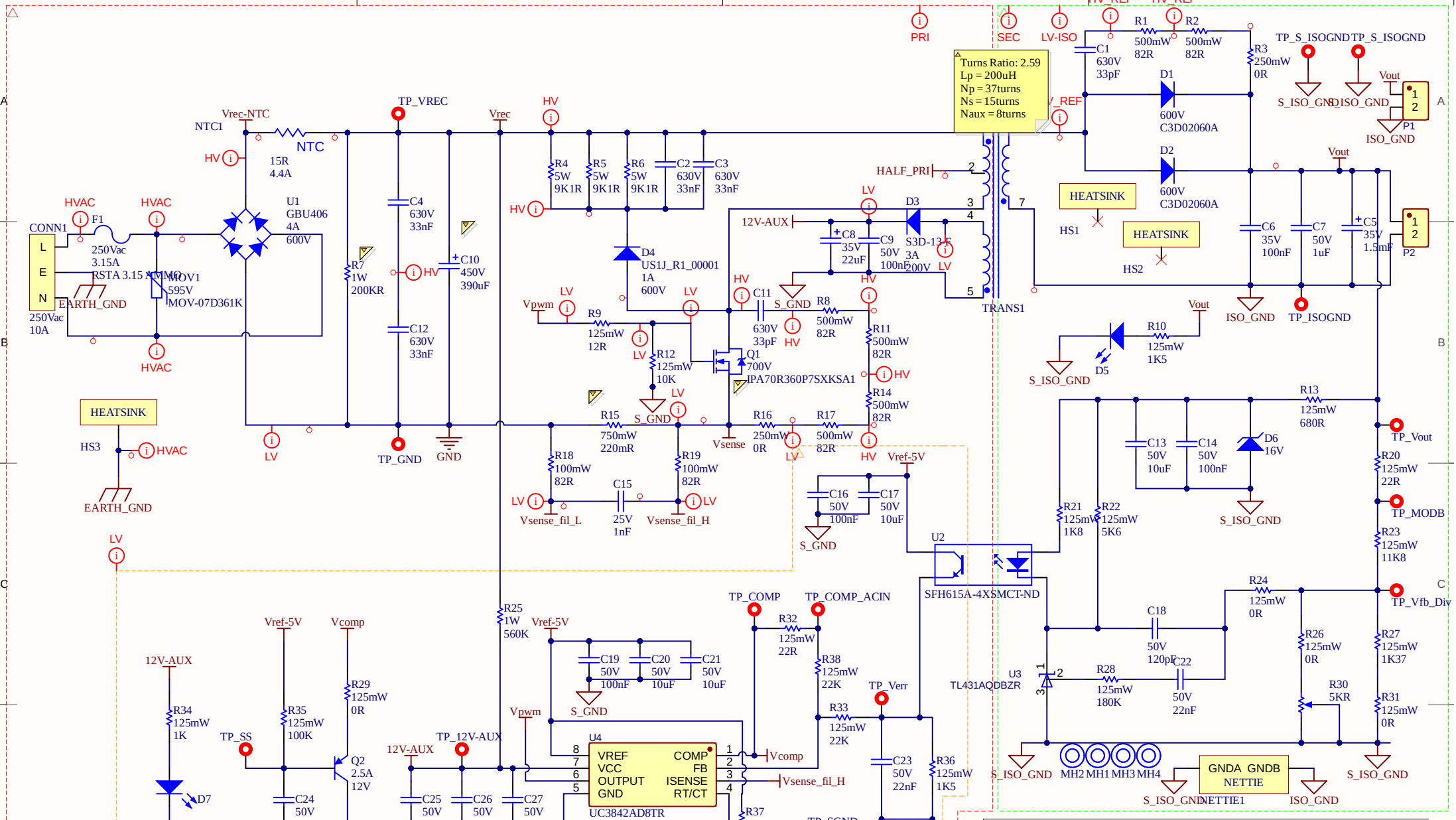

Title		
Flyback converter V1.0		
Size: A4	Number	Revision: V1.0
Date: 1/06/2023		Sheet of
File: C:\Users\..\FlybackV1.0.SchDoc		Drawn By: Arturo S. Bayangos

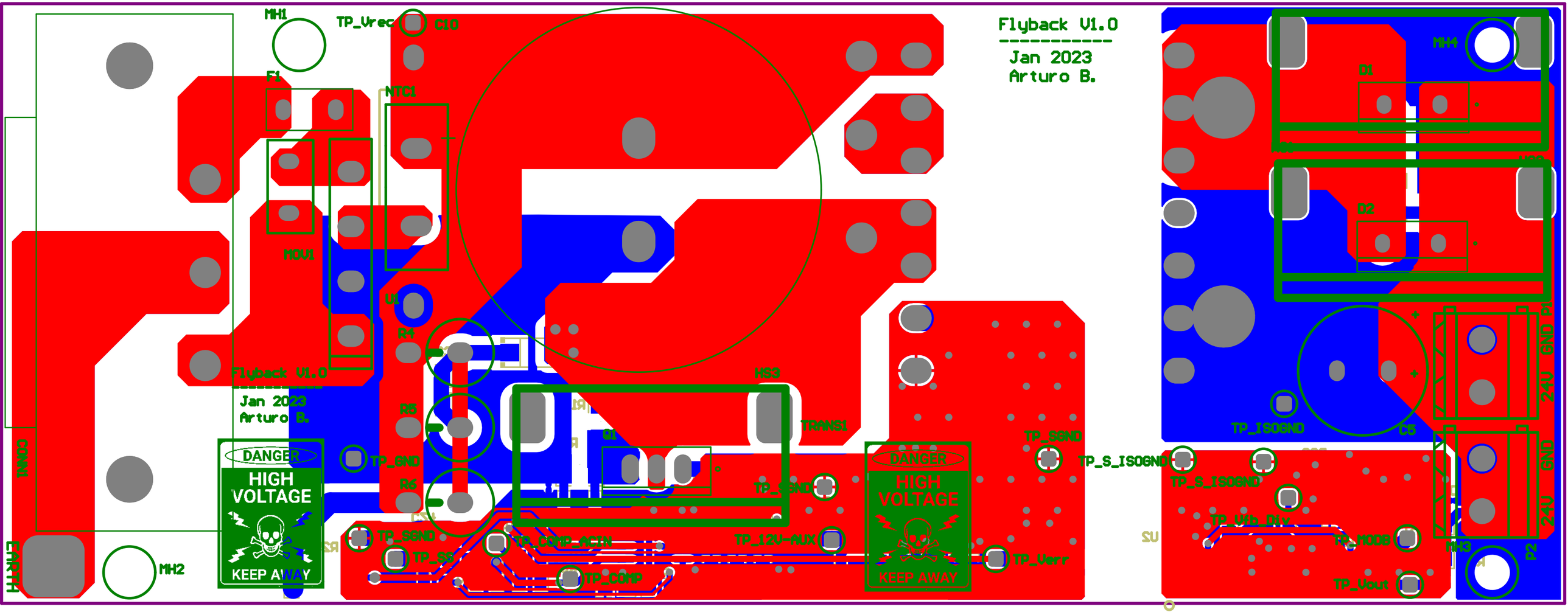
Flyback V1.0
Jan 2023
Arturo B.
MH1
TP_Vrec
C10
F1
NTC1
MOV1
U1
R4
R5
R6
MS3
TRANS1
Q1
TP_GND
TP_SGND
TP_S
TP_COMP_ACIN
TP_COMP
TP_12V-AUX
TP_Verr
DANGER
HIGH VOLTAGE
KEEP AWAY
MH2
EARTH
MH4
D1
D2
TP_ISOGND
C5
TP_S_ISOGND
TP_Vb_DIV
TP_MOD3
TP_Vout
24V
GND
MH3

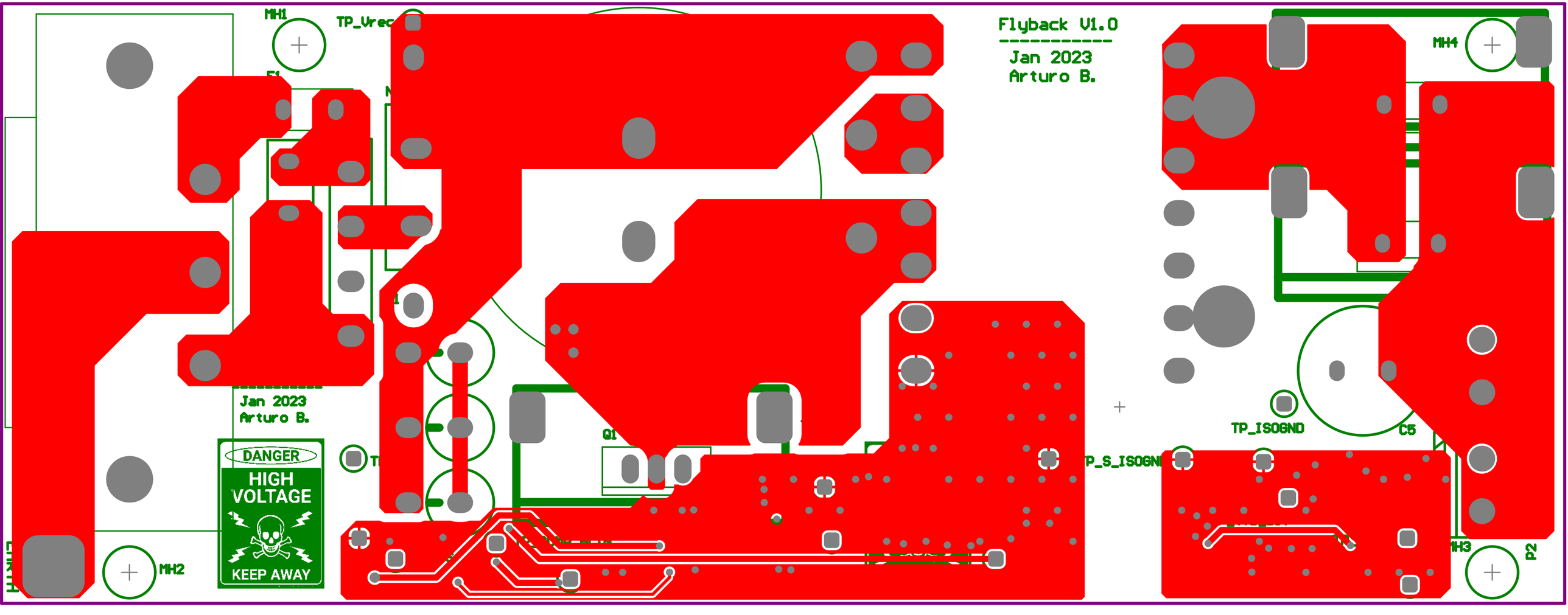
Flyback V1.0
Jan 2023
Arturo B.
MH1
TP_Vrec
MH4
Jan 2023
Arturo B.
DANGER
HIGH VOLTAGE
KEEP AWAY
Q1
TP_ISOGND
C5
TP_S_ISOGND
MH2
MH3
P2

C12
R14
R11
R4
R3
R1
C11
L21
R26
U2