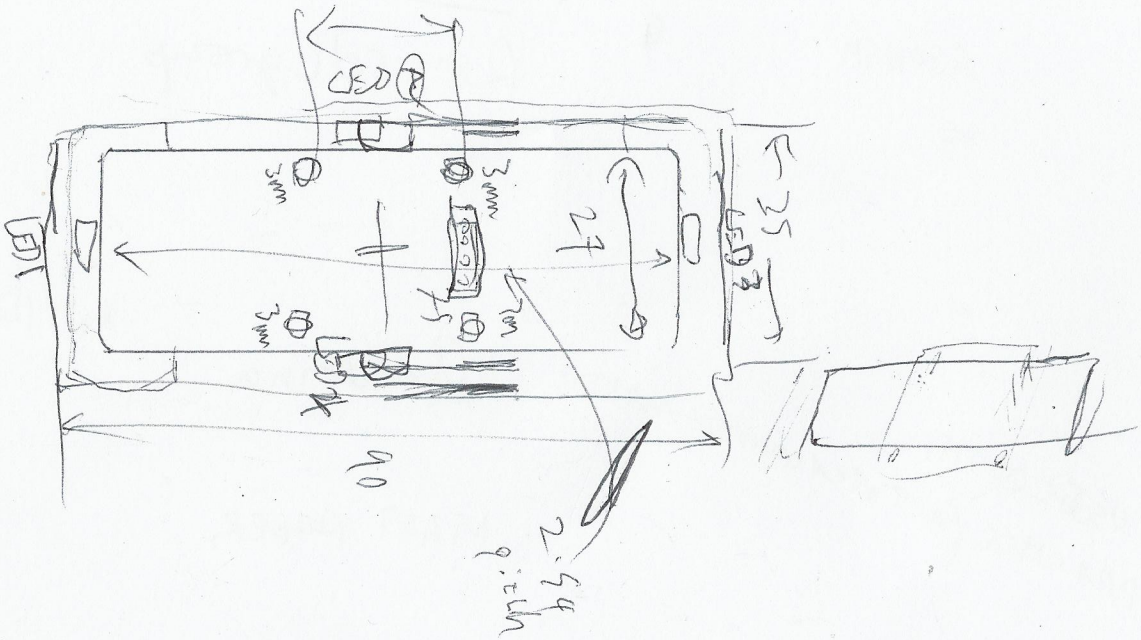
LED
LED
2.54 pitch
90
24
25
4

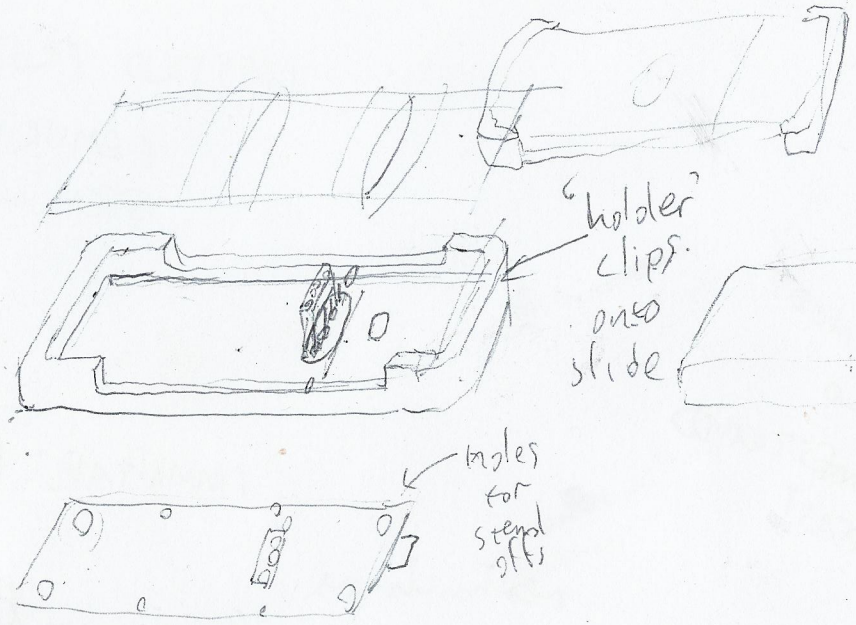
'holder' clips onto slide
holes for stand offs

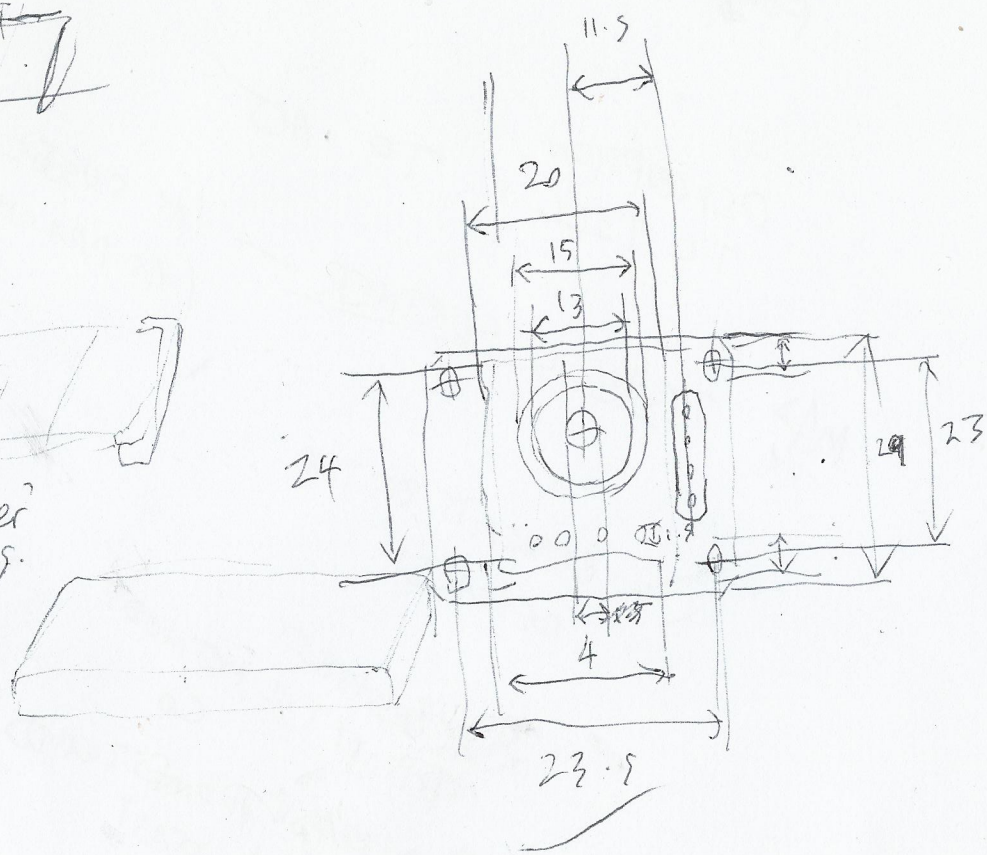
11.5
20
15
13
24
29
23
4
23.5