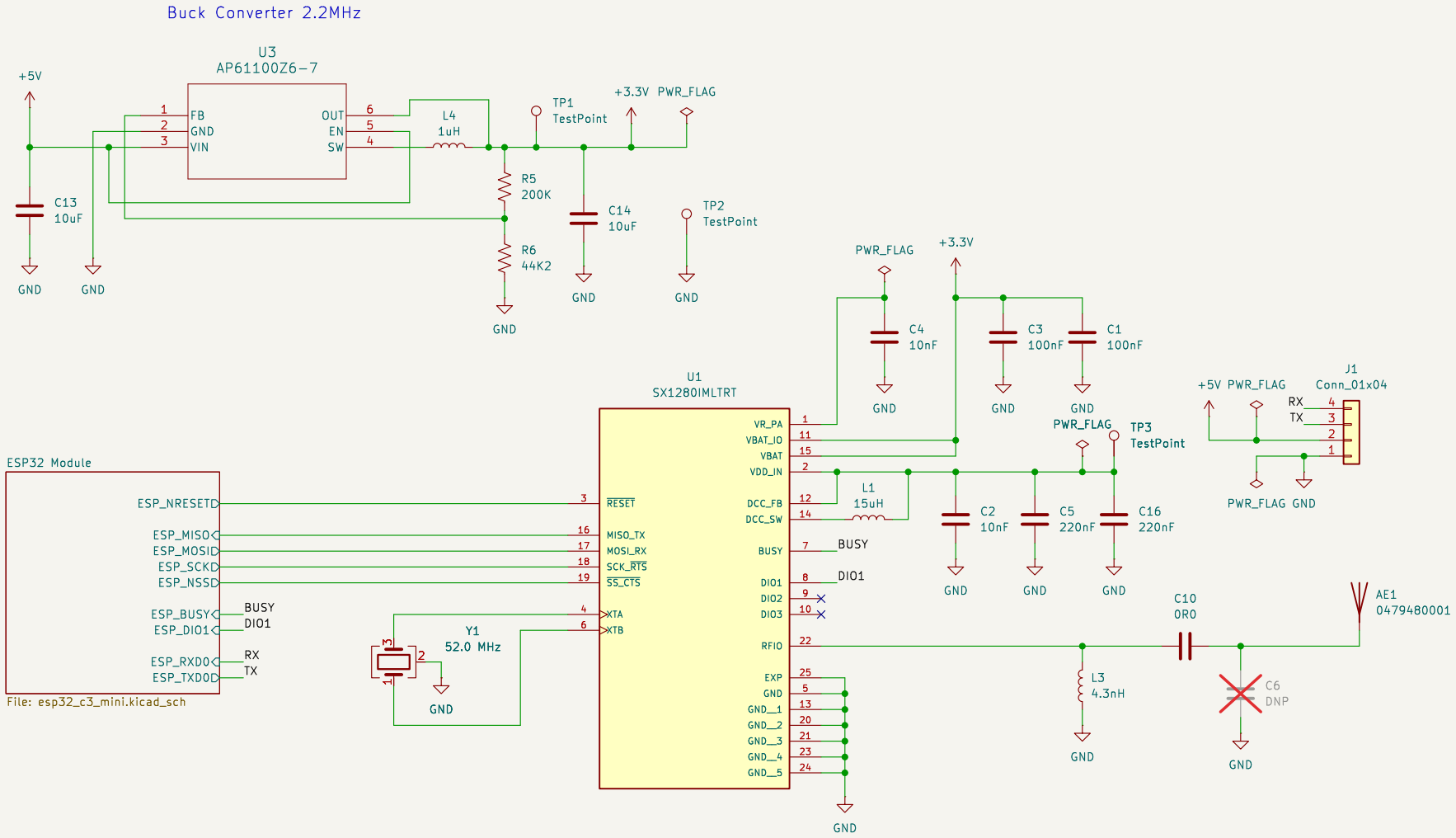

Small Batch Electronics

Sheet: /

File: drone_elrs.kicad_sch

Title: Drone ELRS

Size: USLetter	Date: 2026-02-16	**Rev: 0.1**
KiCad E.D.A. 9.0.7		Id: 1/2

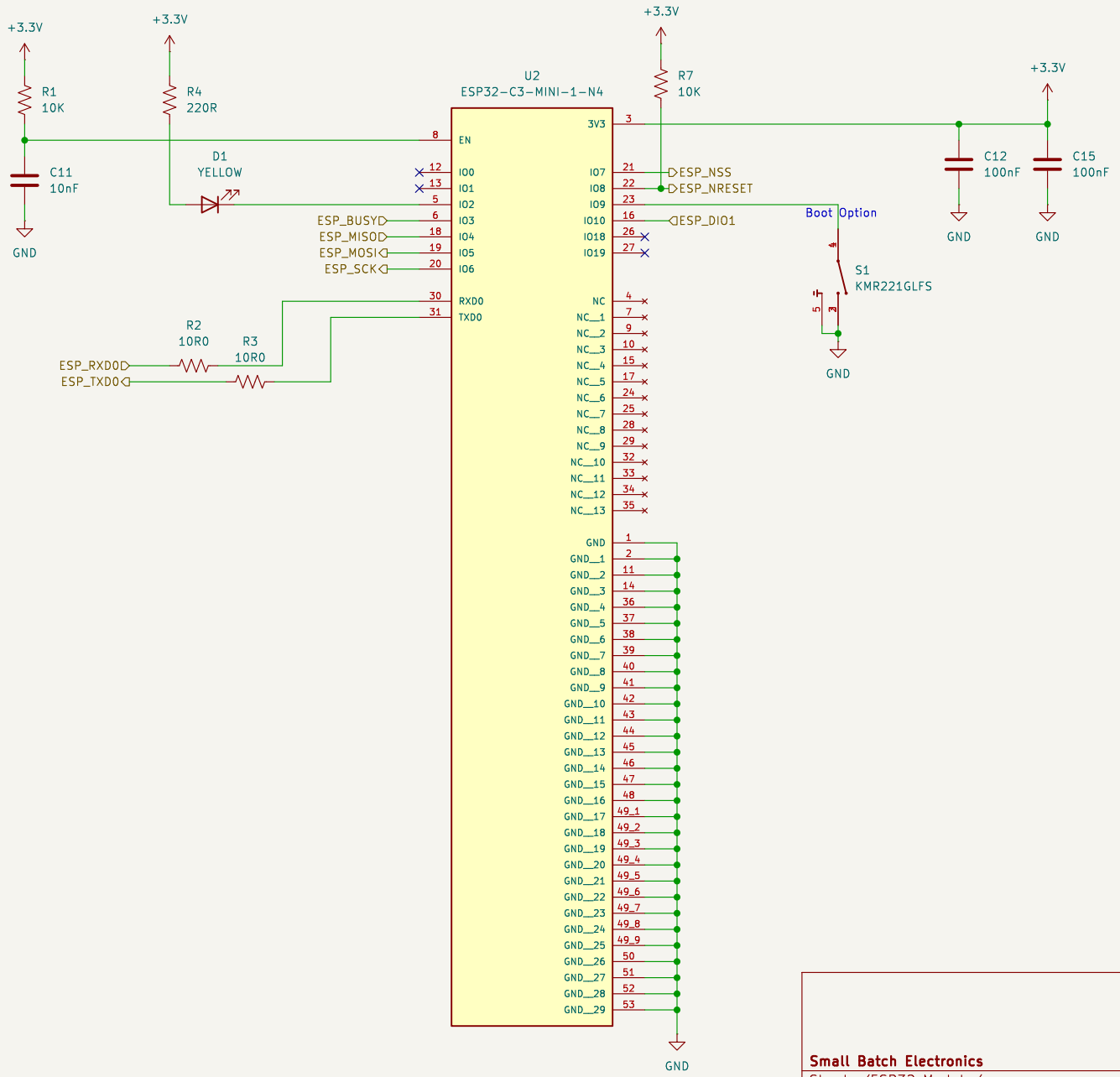

Small Batch Electronics

Sheet: /ESP32 Module/

File: esp32_c3_mini.kicad_sch

Title: Drone ELRS

Size: USLetter	Date: 2026-02-16	**Rev: 0.2**
KiCad E.D.A. 9.0.7		Id: 2/2