Points inside the Brillouin zone

Notes by Andrea Dal Corso (SISSA - Trieste)

1 Brillouin zone

QUANTUM ESPRESSO (QE) support for the definition of high symmetry lines inside the Brillouin zone (BZ) is still rather limited. However QE can calculate the coordinates of the vertexes of the BZ and of particular points inside the BZ. These notes show the shape and orientation of the BZ used by QE. The principal direct and reciprocal lattice vectors, as implemented in the routine `latgen`, are illustrated here together with the labels of each point. These labels can be given as input in a band or phonon calculation to define paths in the BZ. This feature is available with the option `tpiba_b` or `crystal_b` in a `'bands'` calculation or with the option `q_in_band_form` in the input of the `matdyn.x` code. BEWARE: you need to explicitly specify `ibrav` to use this feature. Lines in reciprocal space are defined by giving the coordinates of the starting and ending points and the number of points of each line. The coordinates of the starting and ending points can be given explicitly with three real numbers or by giving the label of a point known to QE. For example:

```
X  10
gG 25
0.5 0.5 0.5 1
```

indicate a path composed by two lines. The first line starts at point X, ends at point Γ, and has 10 $\mathbf{k}$ points. The second line starts at Γ, ends at the point of coordinates `(0.5,0.5,0.5)` and has 25 $\mathbf{k}$ points. Greek labels are prefixed by the letter `g`: `gG` indicates the Γ point, `gS` the Σ point etc. Subscripts are written after the label: the point P_1 is indicated as `P1`. In the following section you can find the labels of the points defined in each BZ. There are many conventions to label high symmetry points inside the BZ. The variable `point_label_type` selects the set of labels used by QE. The default is `point_label_type='SC'` and the labels have been taken from W. Setyawan and S. Curtarolo, Comp. Mat. Sci. **49**, 299 (2010). Other choices can be more convenient in other situations. The names reported in the web pages `http://www.cryst.ehu.es/cryst/get_kvec.html` are available for some BZ. You can use them by setting (`point_label_type='BI'`), others can be added in the future. This option is available only with `ibrav`$\neq$`0` and for all positive `ibrav` with the exception of the base centered monoclinic (`ibrav=13`), and triclinic (`ibrav=14`) lattices. In these cases you have to give all the coordinates of the $\mathbf{k}$-points.

1.1 `ibrav=1`, simple cubic lattice

The primitive vectors of the direct lattice are:

$$\begin{aligned}
\mathbf{a}_1 &= a(1,0,0),\\
\mathbf{a}_2 &= a(0,1,0),\\
\mathbf{a}_3 &= a(0,0,1),
\end{aligned}$$

while the reciprocal lattice vectors are:

$$\begin{aligned}
\mathbf{b}_1 &= \frac{2\pi}{a}(1,0,0),\\
\mathbf{b}_2 &= \frac{2\pi}{a}(0,1,0),\\
\mathbf{b}_3 &= \frac{2\pi}{a}(0,0,1).
\end{aligned}$$

The Brilloin zone is:

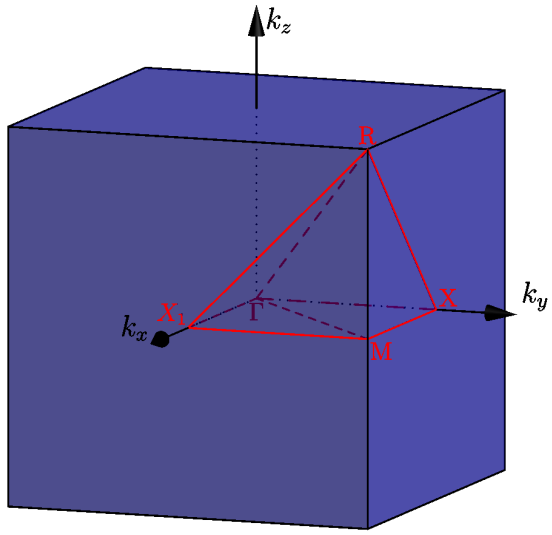

$\mathtt{X}_1$ is available only with `point_label_type='BI'`.

1.2 `ibrav=2`, face centered cubic lattice

The primitive vectors of the direct lattice are:

$$\begin{aligned}
\mathbf{a}_1 &= \frac{a}{2}(-1,0,1),\\
\mathbf{a}_2 &= \frac{a}{2}(0,1,1),\\
\mathbf{a}_3 &= \frac{a}{2}(-1,1,0),
\end{aligned}$$

while the reciprocal lattice vectors are:

$$\begin{aligned}
\mathbf{b}_1 &= \frac{2\pi}{a}(-1,-1,1),\\
\mathbf{b}_2 &= \frac{2\pi}{a}(1,1,1),\\
\mathbf{b}_3 &= \frac{2\pi}{a}(-1,1,-1).
\end{aligned}$$

The Brillouin zone is:

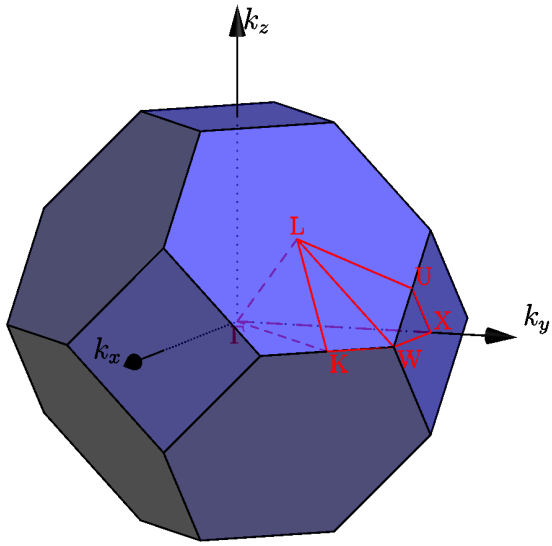

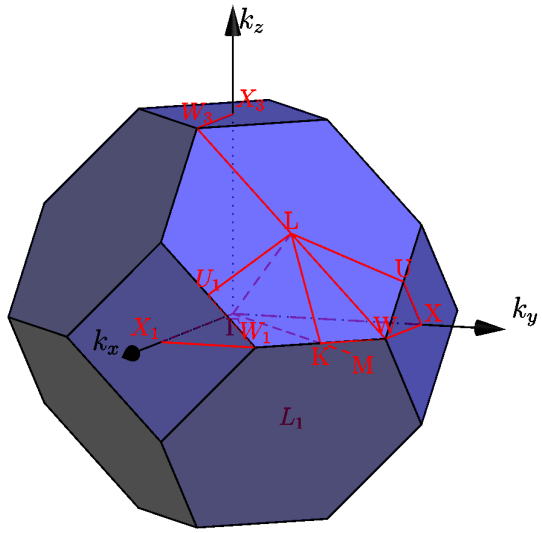

Labels corresponding to `point_label_type='SC'` and to `point_label_type='BI'` are shown on the left and on the right, respectively.

1.3 `ibrav=3`, body centered cubic lattice

The primitive vectors of the direct lattice are:

$$\begin{aligned}
\mathbf{a}_1 &= \frac{a}{2}(1,1,1), \\
\mathbf{a}_2 &= \frac{a}{2}(-1,1,1), \\
\mathbf{a}_3 &= \frac{a}{2}(-1,-1,1),
\end{aligned}$$

while the reciprocal lattice vectors are:

$$\begin{aligned}
\mathbf{b}_1 &= \frac{2\pi}{a}(1,0,1), \\
\mathbf{b}_2 &= \frac{2\pi}{a}(-1,1,0), \\
\mathbf{b}_3 &= \frac{2\pi}{a}(0,-1,1).
\end{aligned}$$

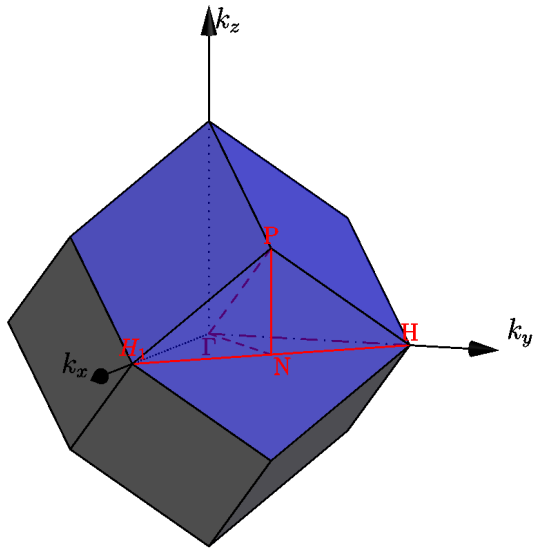

H_1 is available only with `point_label_type='BI'`.

1.4 `ibrav=4`, hexagonal lattice

The primitive vectors of the direct lattice are:

$$\begin{aligned}
\mathbf{a}_1 &= a(1,0,0), \\
\mathbf{a}_2 &= a(-\frac{1}{2}, \frac{\sqrt{3}}{2}, 0), \\
\mathbf{a}_3 &= a(0,0,\frac{c}{a}),
\end{aligned}$$

while the reciprocal lattice vectors are:

$$\begin{aligned}
\mathbf{b}_1 &= \frac{2\pi}{a}(1, \frac{1}{\sqrt{3}}, 0), \\
\mathbf{b}_2 &= \frac{2\pi}{a}(0, \frac{2}{\sqrt{3}}, 0), \\
\mathbf{b}_3 &= \frac{2\pi}{a}(0,0,\frac{a}{c}).
\end{aligned}$$

The BZ is:

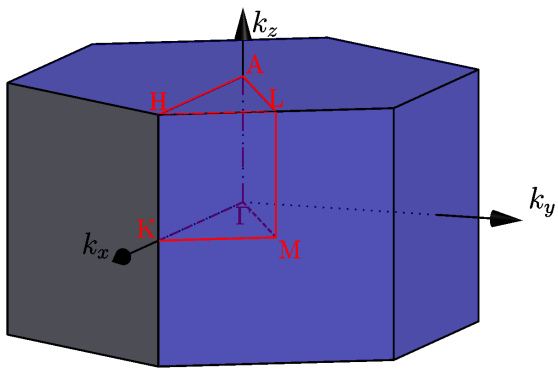

The figure has been obtained with $c/a = 1.4$.

1.5 `ibrav=5`, trigonal lattice

The primitive vectors of the direct lattice are:

$$
\begin{aligned}
\mathbf{a}_1 &= a(\frac{\sqrt{3}}{2}\sin\theta, -\frac{1}{2}\sin\theta, \cos\theta), \\
\mathbf{a}_2 &= a(0, \sin\theta, \cos\theta), \\
\mathbf{a}_3 &= a(-\frac{\sqrt{3}}{2}\sin\theta, -\frac{1}{2}\sin\theta, \cos\theta),
\end{aligned}
$$

while the reciprocal lattice vectors are:

$$
\begin{aligned}
\mathbf{b}_1 &= \frac{2\pi}{a}(\frac{1}{\sqrt{3}\sin\theta}, -\frac{1}{3\sin\theta}, \frac{1}{3\cos\theta}), \\
\mathbf{b}_2 &= \frac{2\pi}{a}(0, \frac{2}{3\sin\theta}, \frac{1}{3\cos\theta}), \\
\mathbf{b}_3 &= \frac{2\pi}{a}(-\frac{1}{\sqrt{3}\sin\theta}, -\frac{1}{3\sin\theta}, \frac{1}{3\cos\theta}),
\end{aligned}
\tag{1}
$$

where $\sin\theta = \sqrt{\frac{2}{3}}\sqrt{1-\cos\alpha}$ and $\cos\theta = \sqrt{\frac{1}{3}}\sqrt{1+2\cos\alpha}$ and α is the angle between any two primitive direct lattice vectors. There are two possible shapes of the BZ, depending on the value of the angle α. For $\alpha < 90°$ we have:

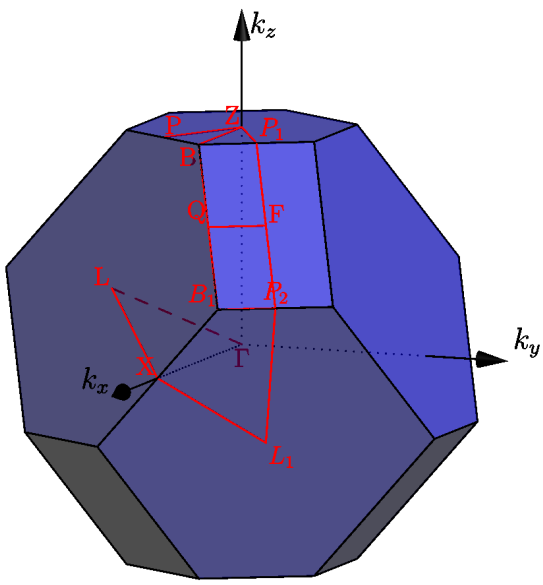

The figure has been obtained with $\alpha = 70°$. For $90° < \alpha < 120°$ we have:

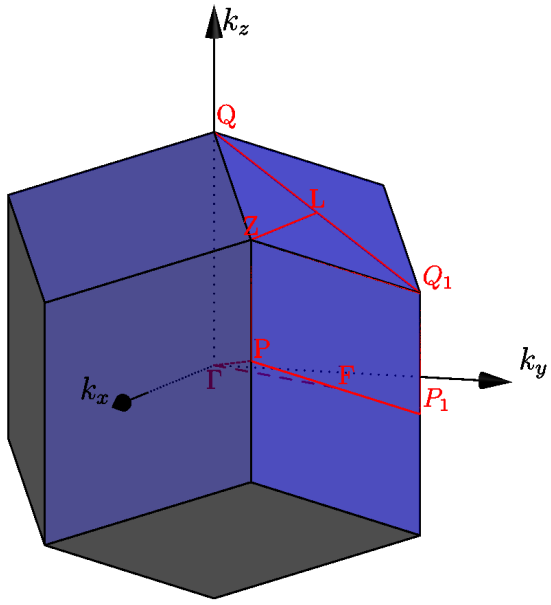

The figure has been obtained with $\alpha = 110°$.

1.6 `ibrav=6`, simple tetragonal lattice

The primitive vectors of the direct lattice are:

$$\begin{aligned}
\mathbf{a}_1 &= a(1,0,0), \\
\mathbf{a}_2 &= a(0,1,0), \\
\mathbf{a}_3 &= a(0,0,\frac{c}{a}),
\end{aligned}$$

while the reciprocal lattice vectors are:

$$\begin{aligned}
\mathbf{b}_1 &= \frac{2\pi}{a}(1,0,0), \\
\mathbf{b}_2 &= \frac{2\pi}{a}(0,1,0), \\
\mathbf{b}_3 &= \frac{2\pi}{a}(0,0,\frac{a}{c}).
\end{aligned}$$

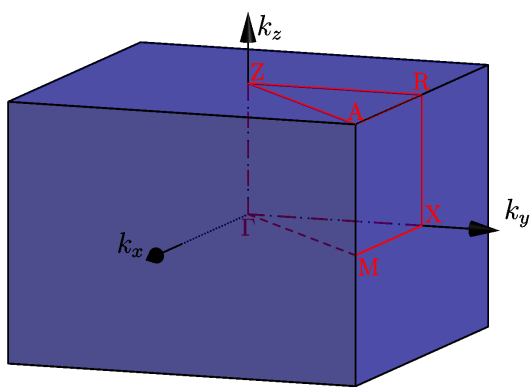

The figure has been obtained with $c/a = 1.4$.

1.7 `ibrav=7`, centered tetragonal lattice

The primitive vectors of the direct lattice are:

$$
\begin{aligned}
\mathbf{a}_1 &= \frac{a}{2}(1,-1,\frac{c}{a}),\\
\mathbf{a}_2 &= \frac{a}{2}(1,1,\frac{c}{a}),\\
\mathbf{a}_3 &= \frac{a}{2}(-1,-1,\frac{c}{a}),
\end{aligned}
$$

while the reciprocal lattice vectors are:

$$
\begin{aligned}
\mathbf{b}_1 &= \frac{2\pi}{a}(1,-1,0),\\
\mathbf{b}_2 &= \frac{2\pi}{a}(0,1,\frac{a}{c}),\\
\mathbf{b}_3 &= \frac{2\pi}{a}(-1,0,\frac{a}{c}).
\end{aligned}
$$

In this case there are two different shapes of the BZ depending on the c/a ratio. For $c/a < 1$ we have:

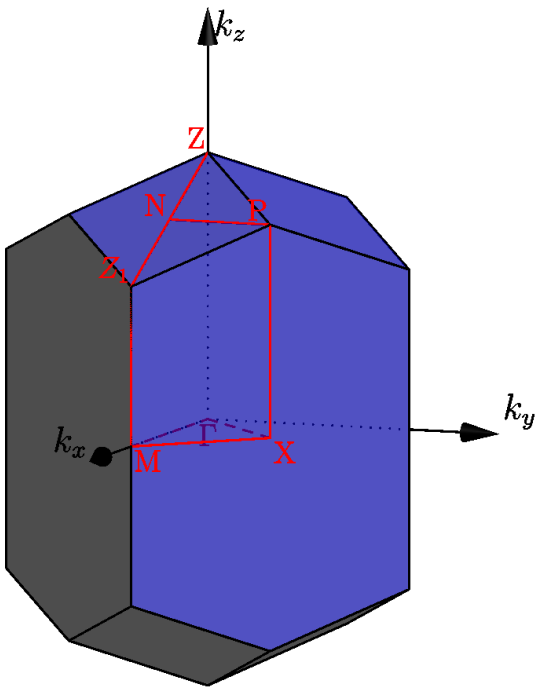

The figure has been obtained with $c/a = 0.5$ $(a > c)$. For $c/a > 1$ we have:

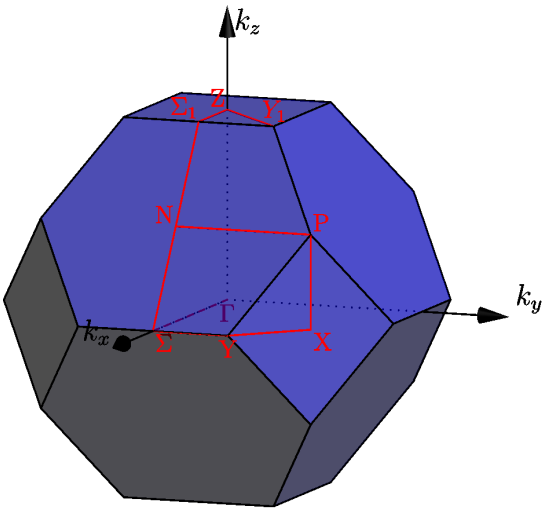

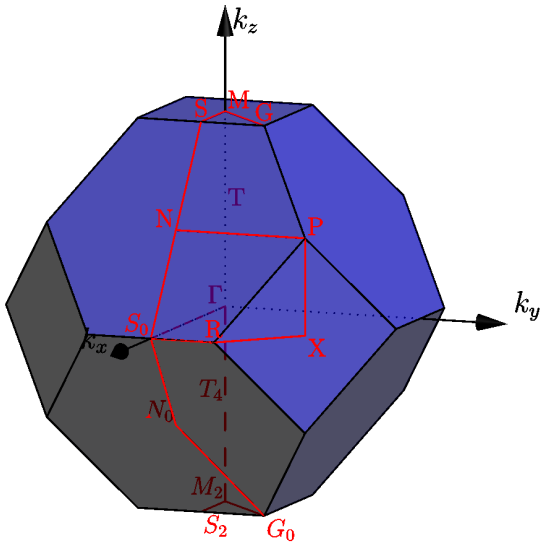

The figure has been obtained with $c/a = 1.4$ ($a < c$). Labels corresponding to `point_label_type='SC'` are shown on the left, those corresponding to `point_label_type='BI'` on the right.

1.8 `ibrav=8`, simple orthorhombic lattice

The primitive vectors of the direct lattice are:

$$\begin{aligned}
\mathbf{a}_1 &= a(1,0,0), \\
\mathbf{a}_2 &= a(0,\frac{b}{a},0), \\
\mathbf{a}_3 &= a(0,0,\frac{c}{a}),
\end{aligned}$$

while the reciprocal lattice vectors are:

$$\begin{aligned}
\mathbf{b}_1 &= \frac{2\pi}{a}(1,0,0), \\
\mathbf{b}_2 &= \frac{2\pi}{a}(0,\frac{a}{b},0), \\
\mathbf{b}_3 &= \frac{2\pi}{a}(0,0,\frac{a}{c}).
\end{aligned}$$

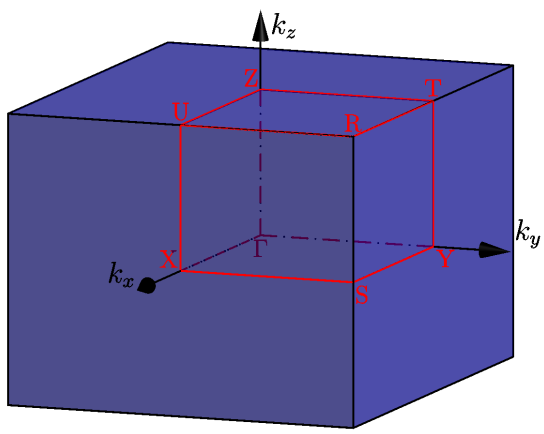

The figure has been obtained with $b/a = 1.2$ and $c/a = 1.5$.

1.9 `ibrav=9`, one-face centered orthorhombic lattice

The direct lattice vectors are:

$$
\begin{aligned}
\mathbf{a}_1 &= \frac{a}{2}(1, \frac{b}{a}, 0), \\
\mathbf{a}_2 &= \frac{a}{2}(-1, \frac{b}{a}, 0), \\
\mathbf{a}_3 &= a(0, 0, \frac{c}{a}),
\end{aligned}
$$

while the reciprocal lattice vectors are

$$
\begin{aligned}
\mathbf{b}_1 &= \frac{2\pi}{a}(1, \frac{a}{b}, 0), \\
\mathbf{b}_2 &= \frac{2\pi}{a}(-1, \frac{a}{b}, 0), \\
\mathbf{b}_3 &= \frac{2\pi}{a}(0, 0, \frac{a}{c}).
\end{aligned}
$$

There is one shape that can have two orientations depending on the ratio between of a and b:

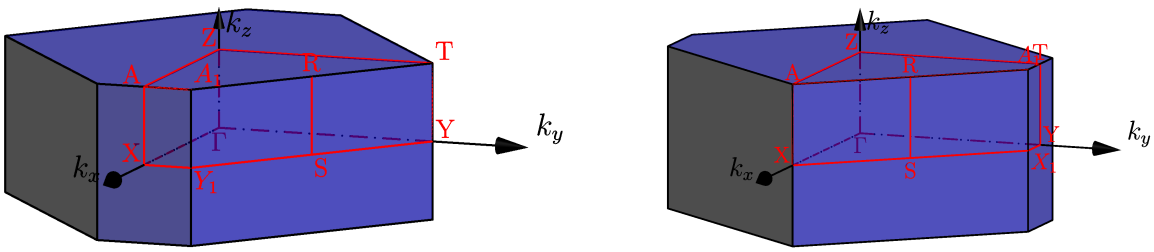

The figures have been obtained with $b/a = 0.8$ and $c/a = 1.4$ (left part $b < a$) and $b/a = 1.2$ and $c/a = 1.4$ (right part $b > a$).

1.10 `ibrav=10`, face centered orthorhombic lattice

The direct lattice vectors are:

$$
\begin{aligned}
\mathbf{a}_1 &= \frac{a}{2}(1, 0, \frac{c}{a}), \\
\mathbf{a}_2 &= \frac{a}{2}(1, \frac{b}{a}, 0), \\
\mathbf{a}_3 &= \frac{a}{2}(0, \frac{b}{a}, \frac{c}{a}).
\end{aligned}
$$

while the reciprocal lattice vectors are

$$
\begin{aligned}
\mathbf{b}_1 &= \frac{2\pi}{a}(1, -\frac{a}{b}, \frac{a}{c}), \\
\mathbf{b}_2 &= \frac{2\pi}{a}(1, \frac{a}{b}, -\frac{a}{c}), \\
\mathbf{b}_3 &= \frac{2\pi}{a}(-1, \frac{a}{b}, \frac{a}{c}).
\end{aligned}
$$

In this case there are three different shapes that can be rotated in different ways depending on the relative sizes of a, b, and c. If a is the shortest side, there are three different shapes according to

$$\frac{1}{a^2} \lesseqgtr \frac{1}{b^2} + \frac{1}{c^2}, \tag{2}$$

if b is the shortest side there are three different shapes according to

$$\frac{1}{b^2} \lesseqgtr \frac{1}{a^2} + \frac{1}{c^2}, \tag{3}$$

and if c is the shortest side there are three different shapes according to

$$\frac{1}{c^2} \lesseqgtr \frac{1}{a^2} + \frac{1}{b^2}. \tag{4}$$

For each case there are two possibilities. If a is the shortest side, we can have $b < c$ or $b > c$, if b is the shortest side, we can have $a < c$ or $a > c$, and finally if c is the shortest side we can have $a < b$ or $a > b$. In total we have 18 distinct cases. Not all cases give different BZ. All the cases with the $<$ sign in Eqs. 2, 3, 4 give the same shape of the BZ that differ for the relative sizes of the faces. All the cases with the $>$ sign in Eqs. 2, 3, 4 give the same shape with faces of different sizes and oriented in different ways. Finally the particular case with the $=$ sign in Eqs. 2, 3, 4 give another shape with faces of different size and different orientations. We show all the 18 possibilities and the labels used in each case.

We start with the case in which a is the shortest side and show on the left the case $b < c$ and on the right the case $b > c$. The first possibility is that $\frac{1}{a^2} < \frac{1}{b^2} + \frac{1}{c^2}$:

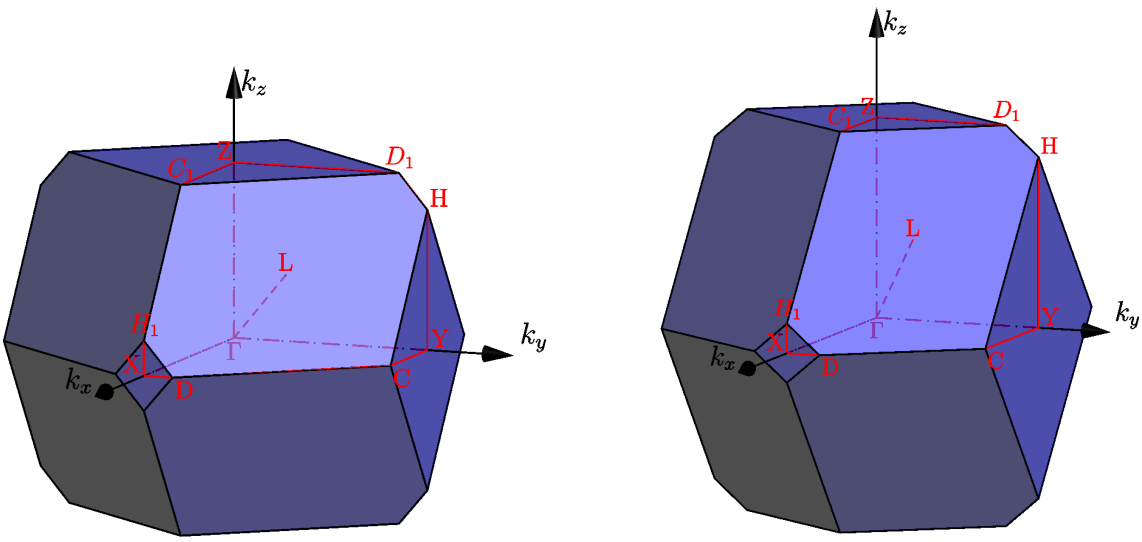

The figures have been obtained with $b/a = 1.2$ and $c/a = 1.4$ (left part $b < c$), and with $b/a = 1.4$ and $c/a = 1.2$ (right part $b > c$).

The second possibility is that $\frac{1}{a^2} = \frac{1}{b^2} + \frac{1}{c^2}$:

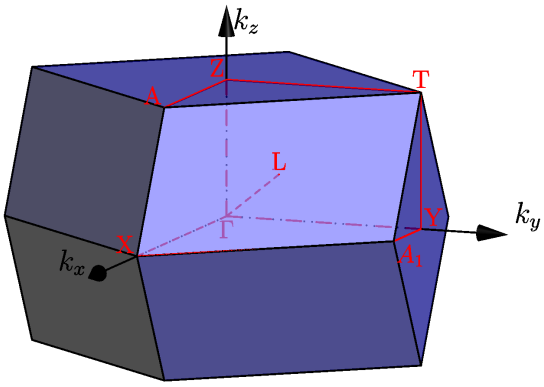

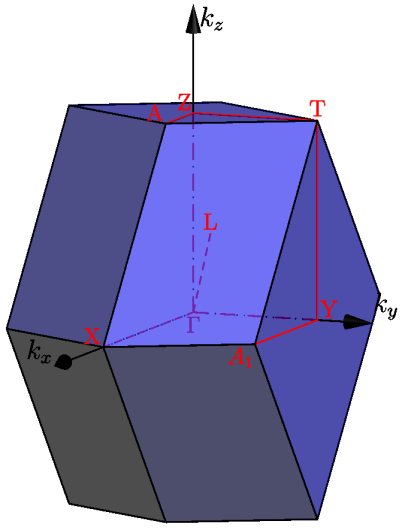

The figures have been obtained with $b/a = 1.2$ and $c/a = 1.80906807$ (left part $b < c$) and with $b/a = 1.80906807$ and $c/a = 1.2$ (right part $b > c$).

The third possibility is that $\frac{1}{a^2} > \frac{1}{b^2} + \frac{1}{c^2}$:

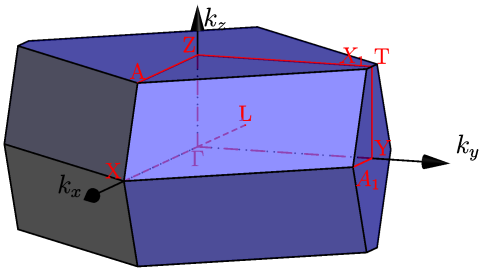

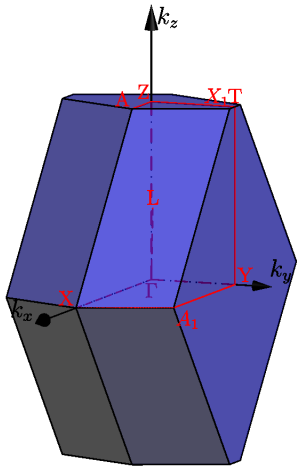

The figures have been obtained with $b/a = 1.2$ and $c/a = 2.4$ (left part $b < c$), and with $b/a = 2.4$ and $c/a = 1.2$ (right part $b > c$).

Then we consider the cases in which b is the shortest side and show on the left the case in which $a < c$ and on the right the case $a > c$.

We have the same three possibilities as before. The first possibility is that $\frac{1}{b^2} < \frac{1}{a^2} + \frac{1}{c^2}$:

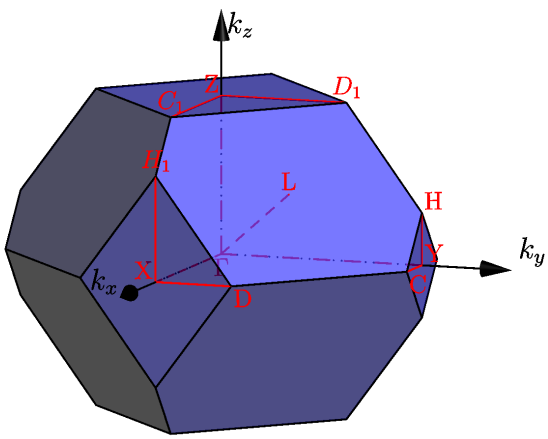

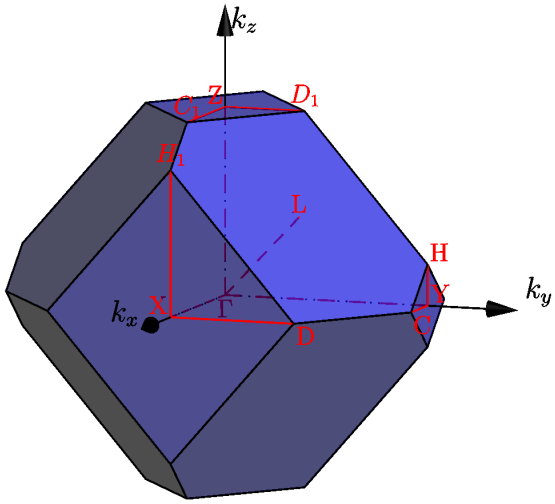

The figures have been obtained with $b/a = 0.9$ and $c/a = 1.2$ (left part $a < c$) and $b/a = 0.75$ and $c/a = 0.95$ (right part $a > c$).

The second possibility is that $\frac{1}{b^2} = \frac{1}{a^2} + \frac{1}{c^2}$:

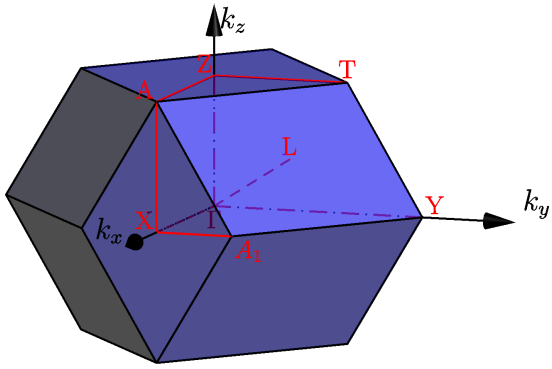

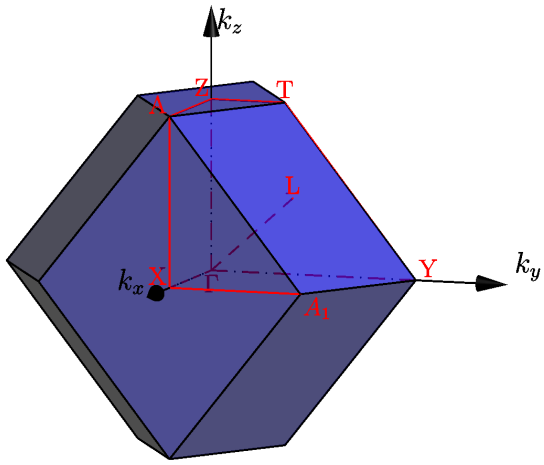

The figures have been obtained with $b/a = 0.8$ and $c/a = 1.33333333333$ (left part $a < c$), and $b/a = 0.6$ and $c/a = 0.75$ (right part $a > c$).

The third possibility is than $\frac{1}{b^2} > \frac{1}{a^2} + \frac{1}{c^2}$:

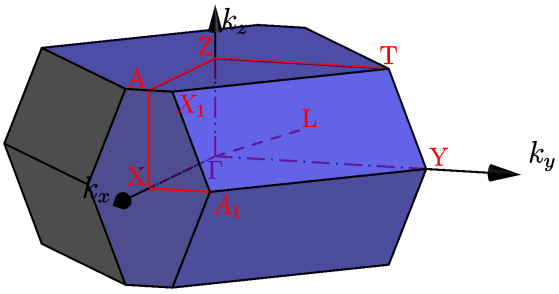

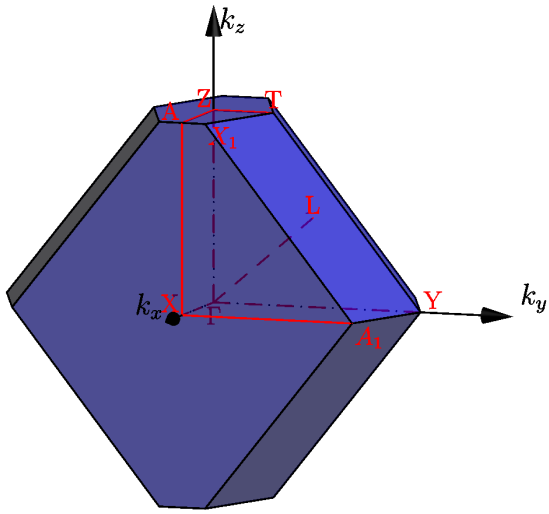

The figures have been obtained with $b/a = 0.8$ and $c/a = 2.0$ (left part $a < c$), and with $b/a = 0.4$ and $c/a = 0.5$ (right part $a > c$).

Finally we consider the case in which c is the shortest side and show on the left the case in which $a < b$ and on the right the case in which $a > b$.

The first possibility is that $\frac{1}{c^2} < \frac{1}{a^2} + \frac{1}{b^2}$:

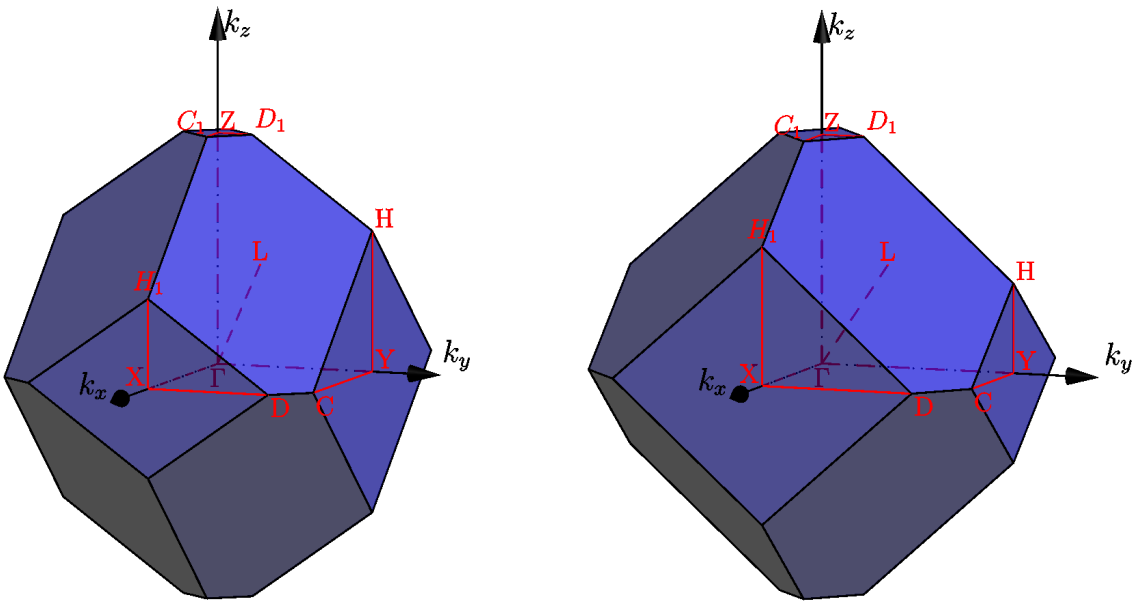

The figures have been obtained with $b/a = 1.2$ and $c/a = 0.85$ (left part $a < b$) and $b/a = 0.85$ and $c/a = 0.75$ (right part $a > b$).

The second possibility is that $\frac{1}{c^2} = \frac{1}{a^2} + \frac{1}{b^2}$:

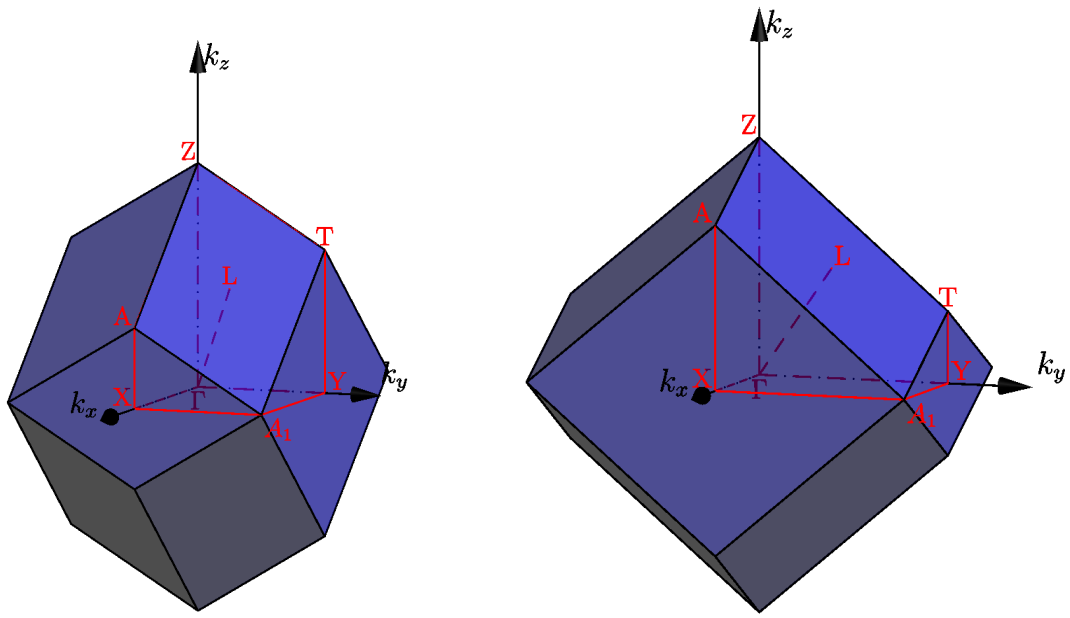

The figures have been obtained with $b/a = 1.333333333$ and $c/a = 0.8$ (left part $a < b$) and with $b/a = 0.66$ and $c/a = 0.5508422$ (right part $a > b$).

Finally the third possibility is that $\frac{1}{c^2} > \frac{1}{a^2} + \frac{1}{b^2}$:

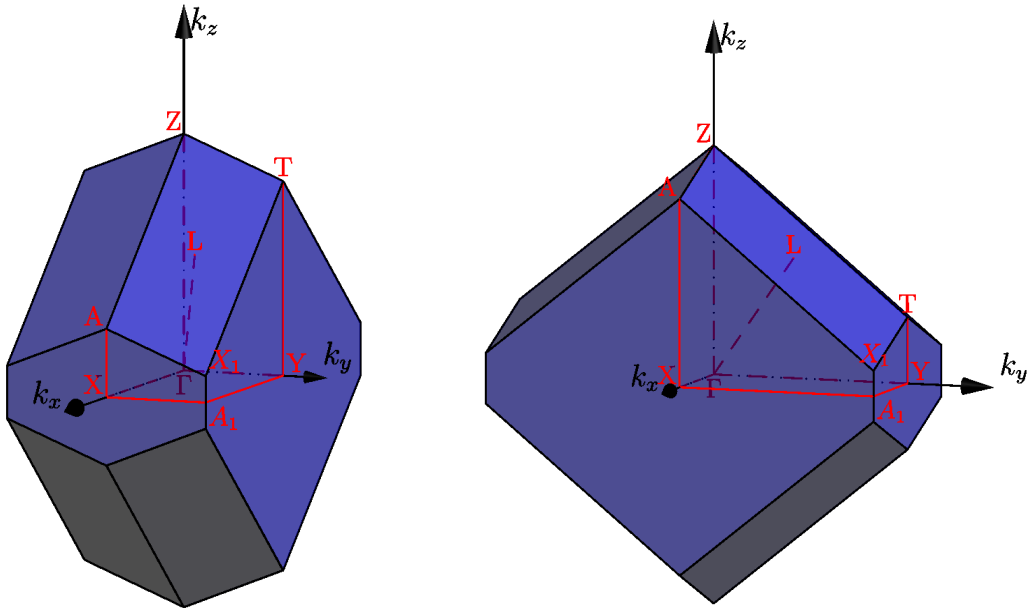

The figures have been obtained with $b/a = 2.0$ and $c/a = 0.8$ (left part $a < b$), and $b/a = 0.5$ and $c/a = 0.4$ (right part $a > b$).

1.11 `ibrav=11`, body centered orthorhombic lattice

The direct lattice vectors are:

$$\begin{aligned}
\mathbf{a}_1 &= \frac{a}{2}(1, \frac{b}{a}, \frac{c}{a}), \\
\mathbf{a}_2 &= \frac{a}{2}(-1, \frac{b}{a}, \frac{c}{a}), \\
\mathbf{a}_3 &= \frac{a}{2}(-1, -\frac{b}{a}, \frac{c}{a}).
\end{aligned}$$

while the reciprocal lattice vectors are:

$$\begin{aligned}
\mathbf{b}_1 &= \frac{2\pi}{a}(1, 0, \frac{a}{c}), \\
\mathbf{b}_2 &= \frac{2\pi}{a}(-1, \frac{a}{b}, 0), \\
\mathbf{b}_3 &= \frac{2\pi}{a}(0, -\frac{a}{b}, \frac{a}{c}).
\end{aligned}$$

In this case the BZ has one shape that can be rotated in different ways depending on the relative sizes of a, b, and c. Similar orientations and BZ that differ only for the relative sizes of the faces are obtained for the cases that have in common the longest side. Therefore we distinguish the cases in which a is the longest side and $b < c$ or $b > c$, the cases in which b is the longest side and $a < c$ or $a > c$ and the cases in which c is the longest side and $a < b$ or $a > b$. We have 6 distinct cases.

First we take a as the longest side and show on the left the case $b < c$ and on the right the case $b > c$:

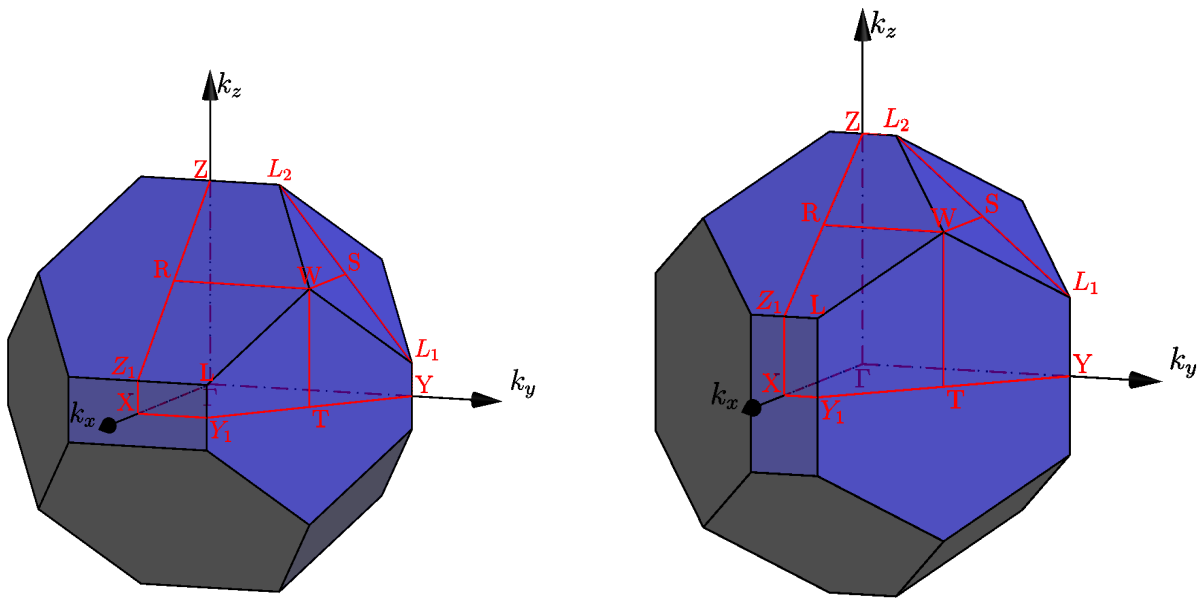

The figures have been obtained with $b/a = 0.7$ and $c/a = 0.85$ (left part $b < c$) and $b/a = 0.85$ and $c/a = 0.7$ (right part $b > c$).

Then we take b as the longest side and show on the left the case in which $a < c$ and on the right the case in which $a > c$:

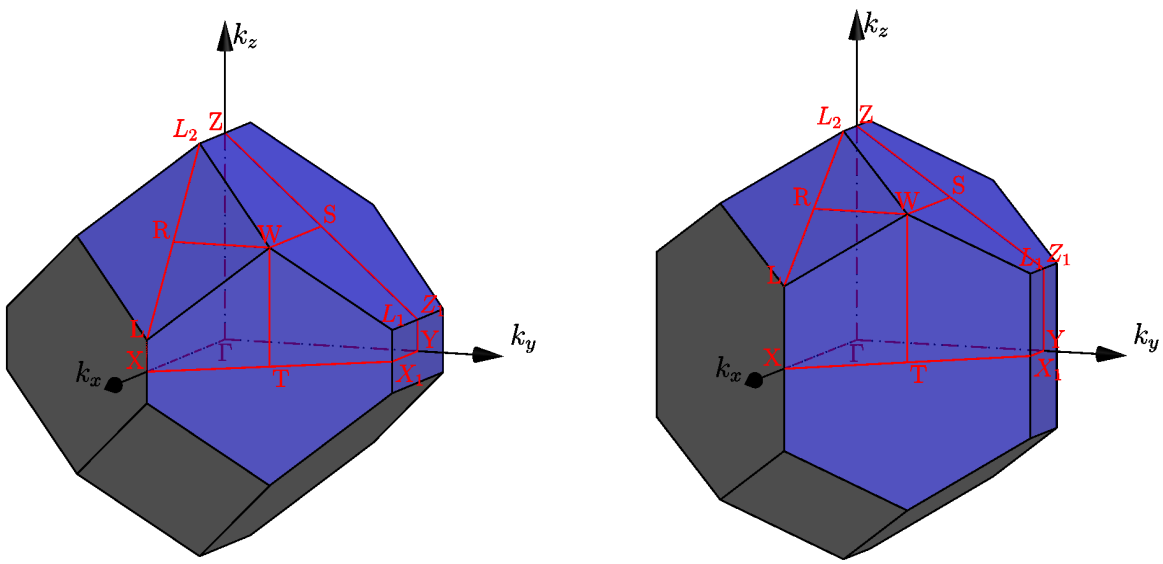

The figures have been obtained with $b/a = 1.4$ and $c/a = 1.2$ (left part $a < c$) and $b/a = 1.2$ and $c/a = 0.8$ (right part $a > c$).

Finally we take c as the longest side and show on the left the case in which $a < b$ and on the right the case in which $b < a$:

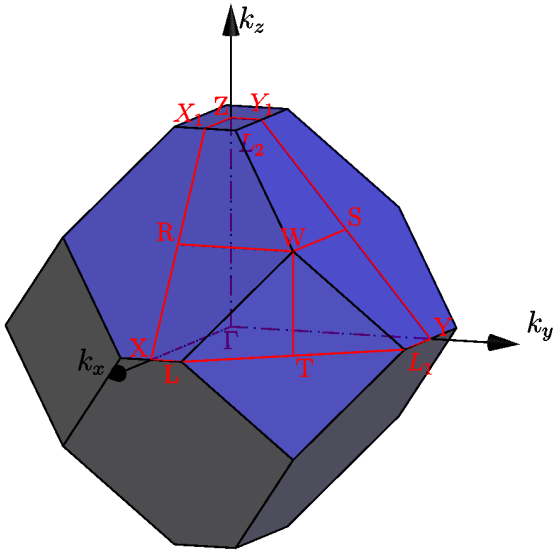

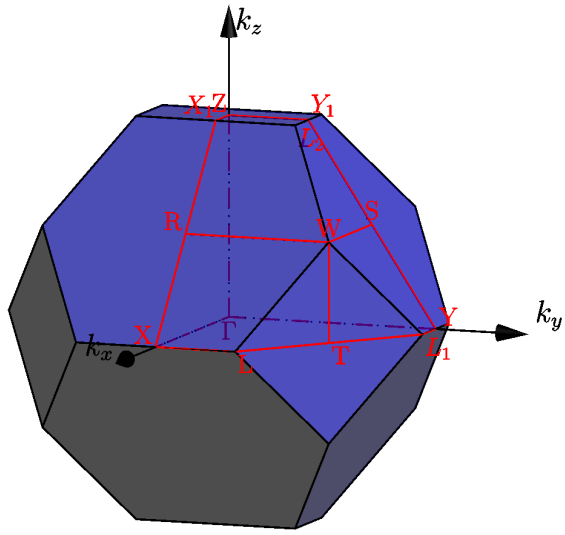

The figures have been obtained with $b/a = 1.2$ and $c/a = 1.4$ (left part), and $b/a = 0.8$ and $c/a = 1.2$ (right part).

1.12 `ibrav=12`, simple monoclinic lattice, c unique

The direct lattice vectors are:

$$\begin{aligned}
\mathbf{a}_1 &= a(1,0,0), \\
\mathbf{a}_2 &= a(\frac{b}{a}\cos\gamma, \frac{b}{a}\sin\gamma, 0), \\
\mathbf{a}_3 &= a(0,0,\frac{c}{a}).
\end{aligned}$$

while the reciprocal lattice vectors are:

$$\begin{aligned}
\mathbf{b}_1 &= \frac{2\pi}{a}(1, -\frac{\cos\gamma}{\sin\gamma}, 0), \\
\mathbf{b}_2 &= \frac{2\pi}{a}(0, \frac{a}{b\sin\gamma}, 0), \\
\mathbf{b}_3 &= \frac{2\pi}{a}(0,0,\frac{a}{c}).
\end{aligned}$$

The Brillouin zone is:

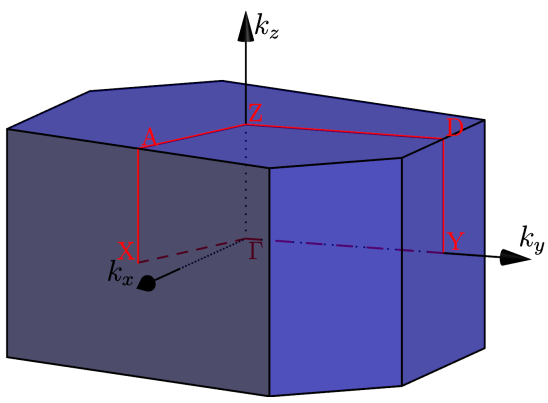

The figure has been obtained with $b/a = 0.8$, $c/a = 1.4$ and $\cos\gamma = 0.3$.

1.13 `ibrav=-12`, simple monoclinic lattice, b unique

The direct lattice vectors are:

$$\begin{aligned}
\mathbf{a}_1 &= a(1,0,0), \\
\mathbf{a}_2 &= a(0,\frac{b}{a},0), \\
\mathbf{a}_3 &= a(\frac{c}{a}\cos\beta, 0, \frac{c}{a}\sin\beta),
\end{aligned}$$

while the reciprocal lattice vectors are:

$$\begin{aligned}
\mathbf{b}_1 &= \frac{2\pi}{a}(1,0,-\frac{\cos\beta}{\sin\beta}), \\
\mathbf{b}_2 &= \frac{2\pi}{a}(0,\frac{a}{b},0), \\
\mathbf{b}_3 &= \frac{2\pi}{a}(0,0,\frac{a}{c\sin\beta}).
\end{aligned}$$

The Brillouin zone is:

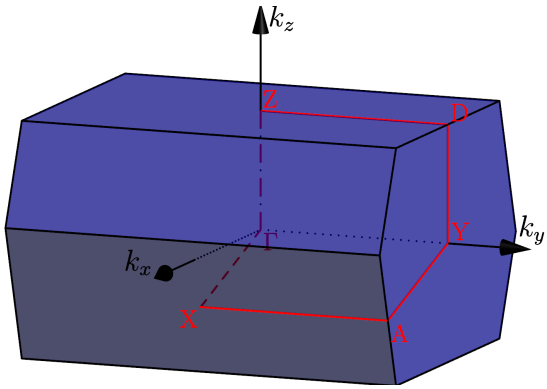

The figure has been obtained with $b/a = 0.8$, $c/a = 1.4$ and $\cos\beta = 0.3$.

1.14 `ibrav=13,14`, one-base centered monoclinic, triclinic

These lattices are not supported by this feature, you have to give explicitly the coordinates of the path.

2 Bibliography

[1] G.F. Koster, Space groups and their representations, Academic press, New York and London, (1957).
[2] C.J. Bradley and A.P. Cracknell, The mathematical theory of symmetry in solids, Oxford University Press, (1972).
[3] W. Setyawan and S. Curtarolo, Comp. Mat. Sci. **49**, 299 (2010).
[4] E.S. Tasci, G. de la Flor, D. Orobengoa, C. Capillas, J.M. Perez-Mato, M.I. Aroyo, "An introduction to the tools hosted in the Bilbao Crystallographic Server". EPJ Web of Conferences 22 00009 (2012).