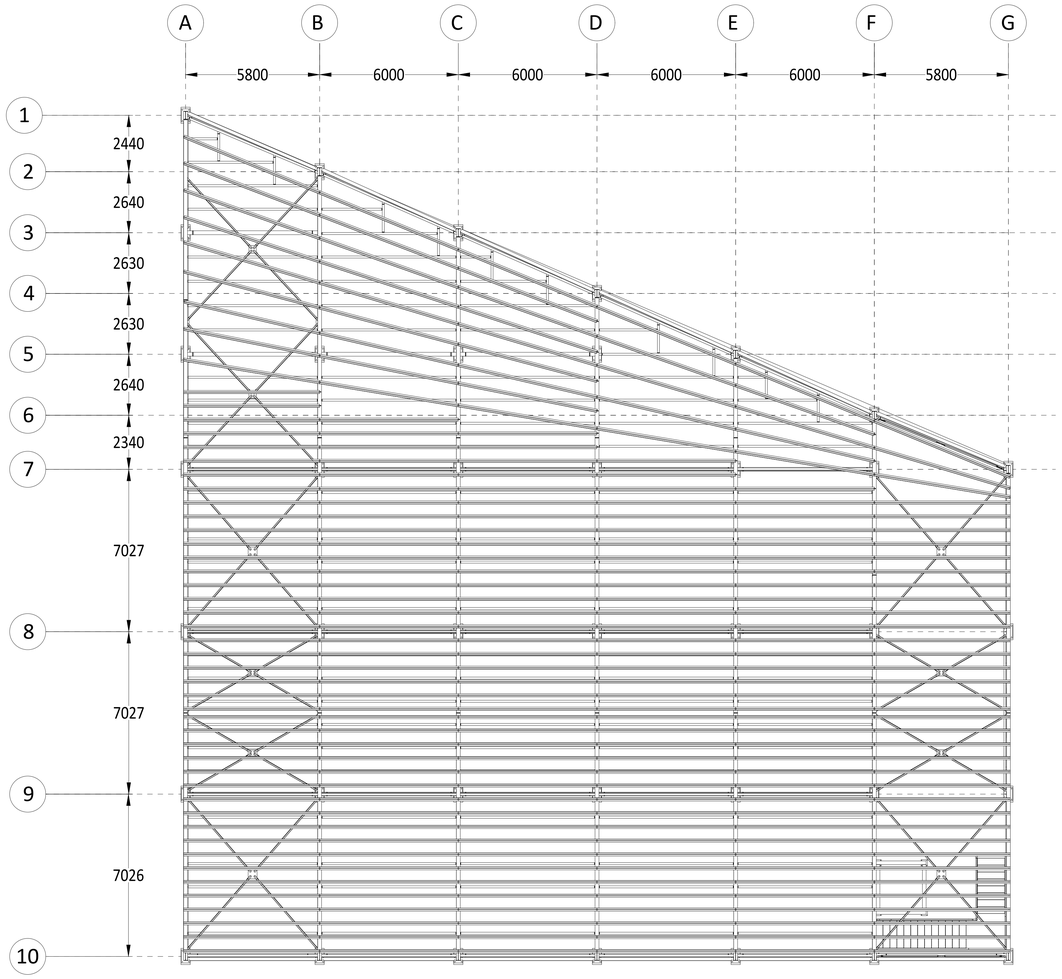

AREA = 1042.2 SQR METERS

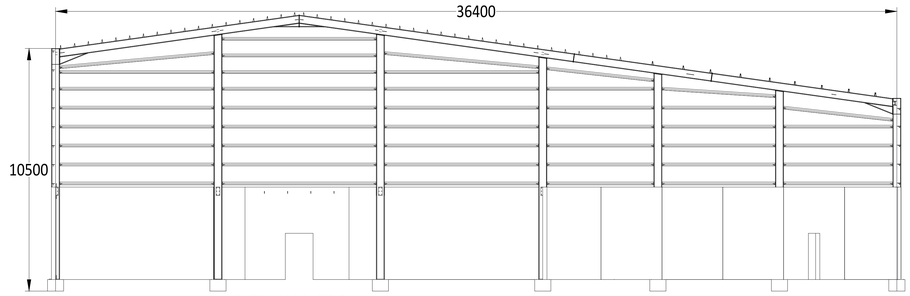

SECTION ON GRID A
FRAME A SCALE 1:1.25

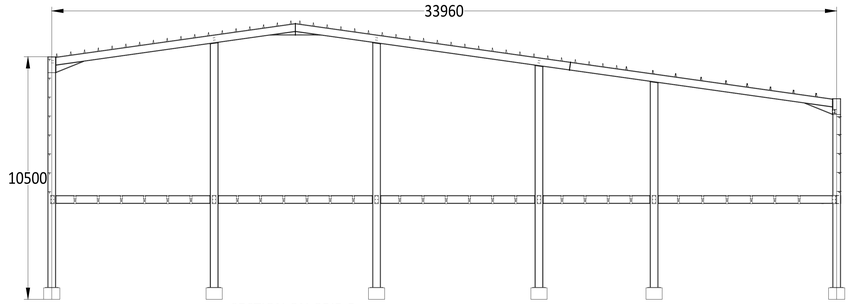

SECTION ON GRID B
FRAME B SCALE 1:1.25

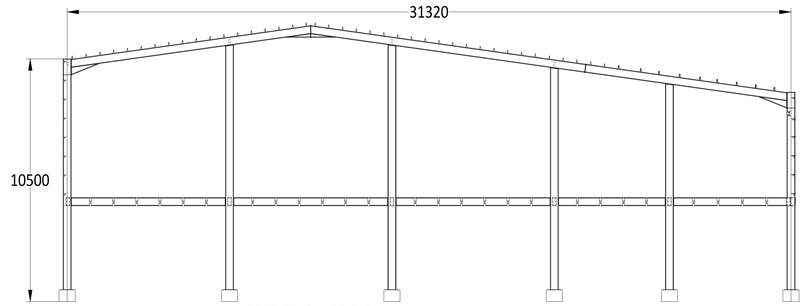

SECTION ON GRID C
FRAME C SCALE 1:1.25

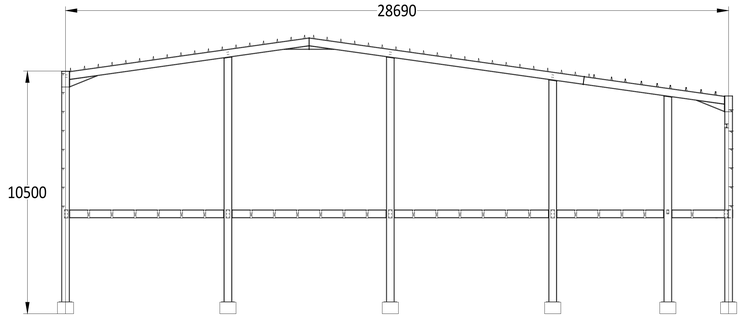

SECTION ON GRID D
FRAME D SCALE 1:1.25

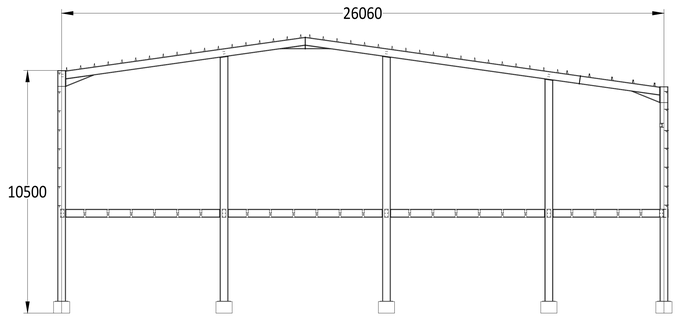

SECTION ON GRID E
FRAME E SCALE 1:1.25

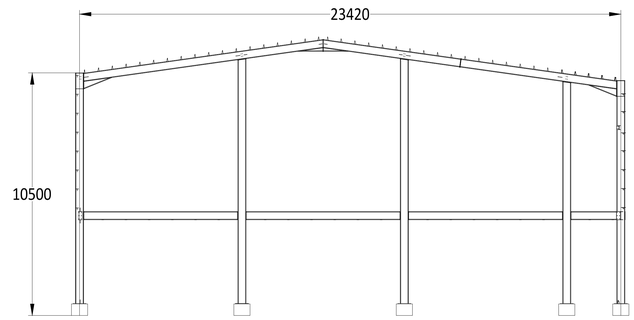

SECTION ON GRID F
FRAME F SCALE 1:1.25

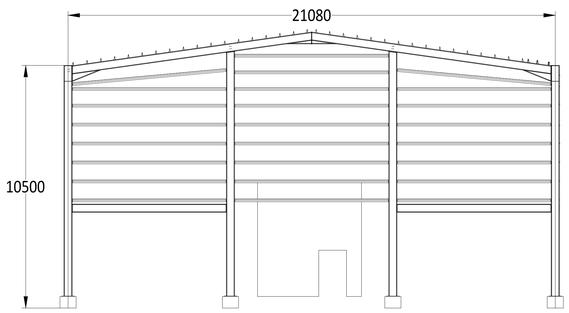

SECTION ON GRID G
FRAME G SCALE 1:1.25

ASSEMBLY NO.	TITLE HANGER GENERAL ARRANGEMENT DETAILS			
PART NO.		SIZE A0	DWG NO	REV 00
DESIGNER				
APPROVED	SCALE AS SHOWN	RELEASE DATE 21/08/2025	WEIGHT Kg.	QTY.

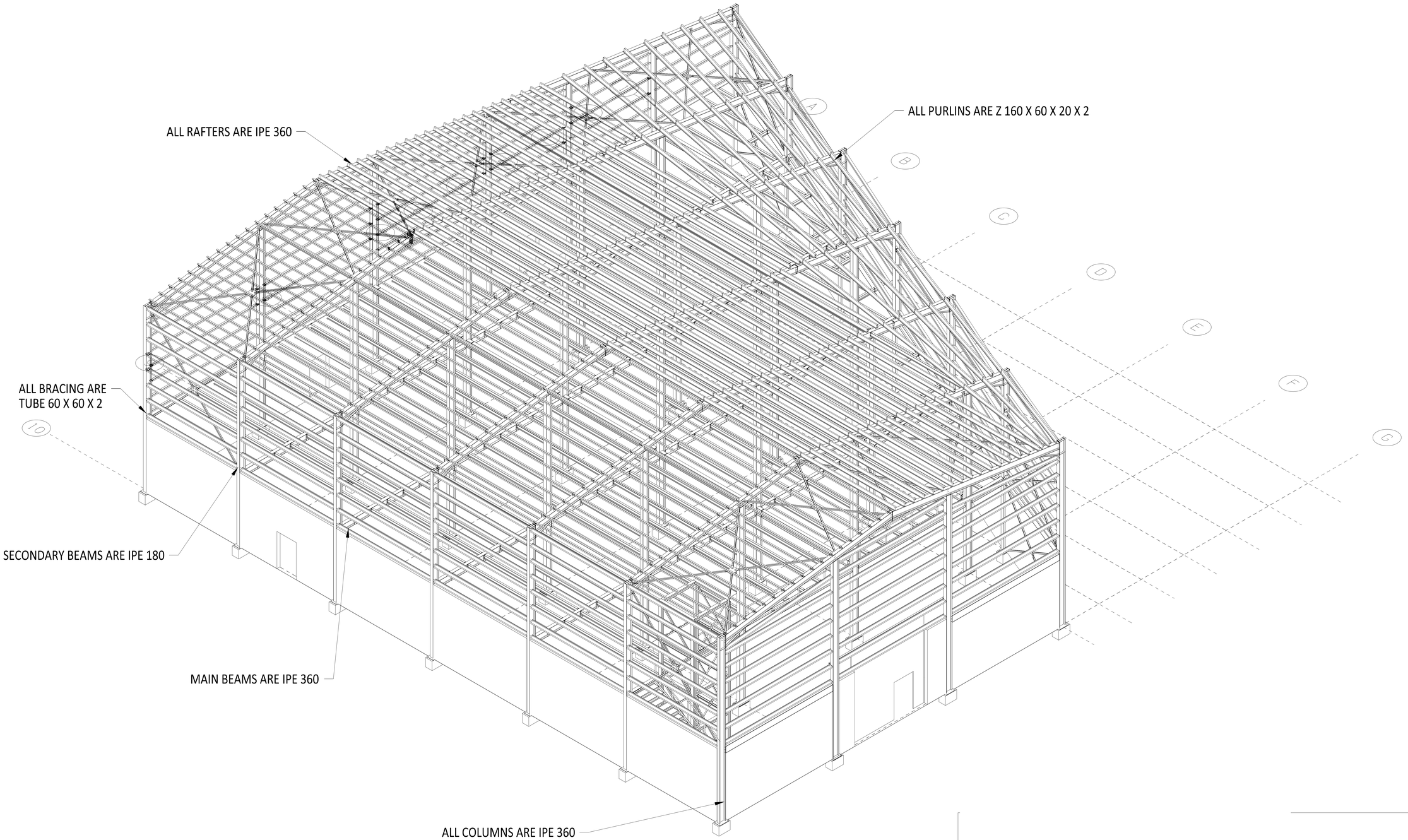

ASSEMBLY NO.		TITLE HANGER GENERAL ARRANGEMENT DETAILS			
PART NO.			SIZE A0	DWG NO	REV 00
DESIGNER					
APPROVED		SCALE AS SHOWN	RELEASE DATE 21/08/2025	WEIGHT Kg.	QTY.

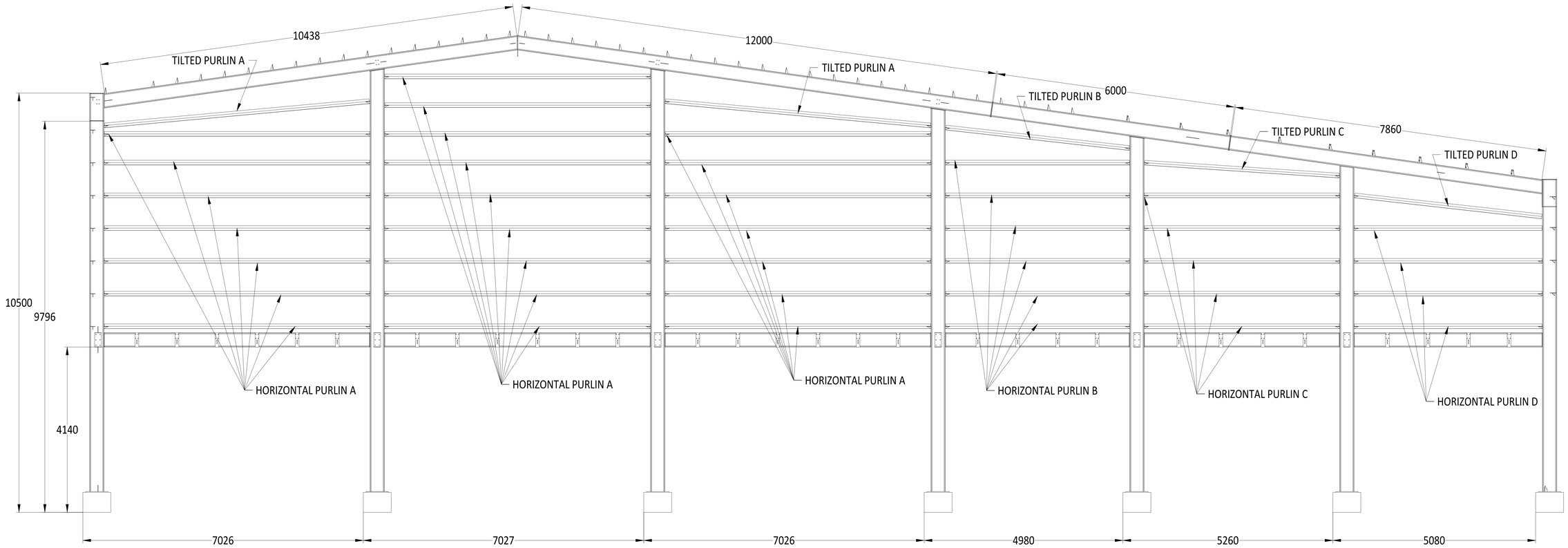

SCALE 2:1

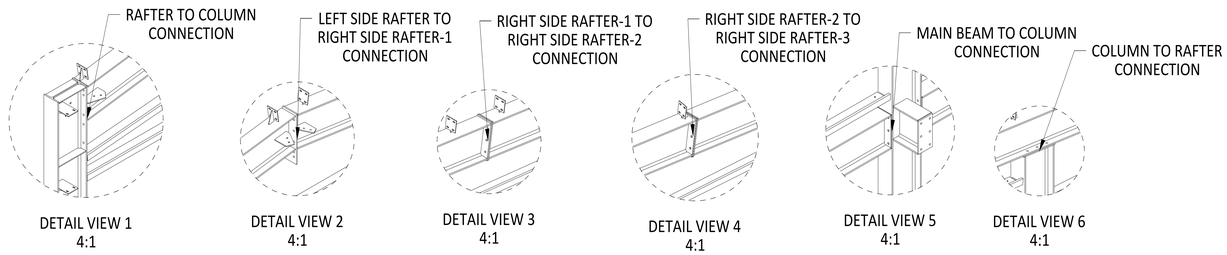

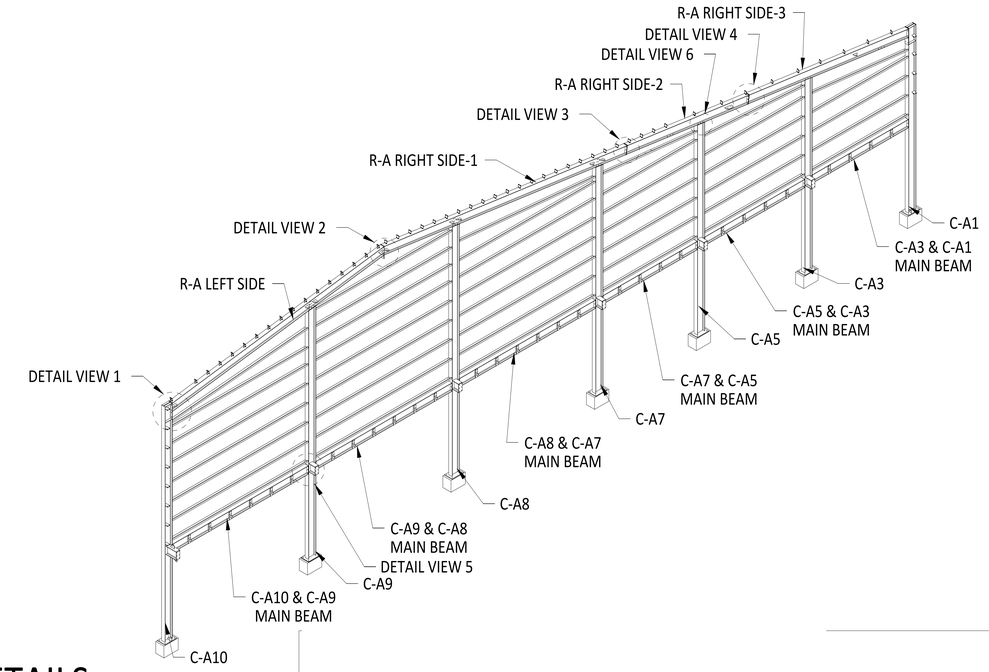

FRAME-A ERECTION DETAILS

ASSEMBLY NO.		TITLE HANGER FRAME-A ERECTION DETAILS			
PART NO.			SIZE A0	DWG NO	REV 00
DESIGNER					
APPROVED		SCALE AS SHOWN	RELEASE DATE 21/08/2025	WEIGHT Kg.	QTY.

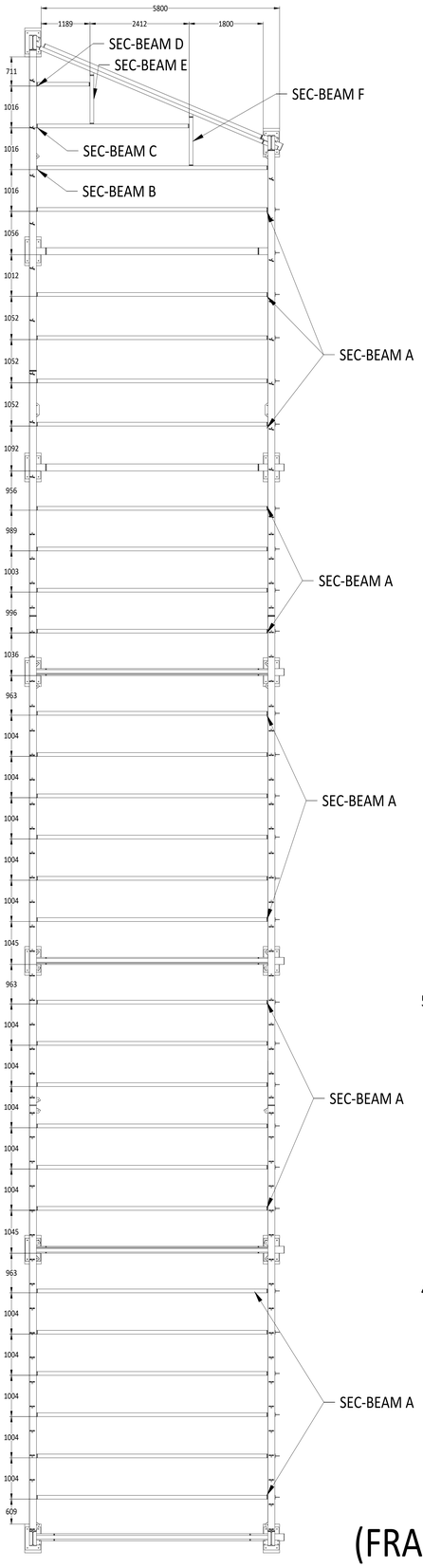

SCALE 1.5:1

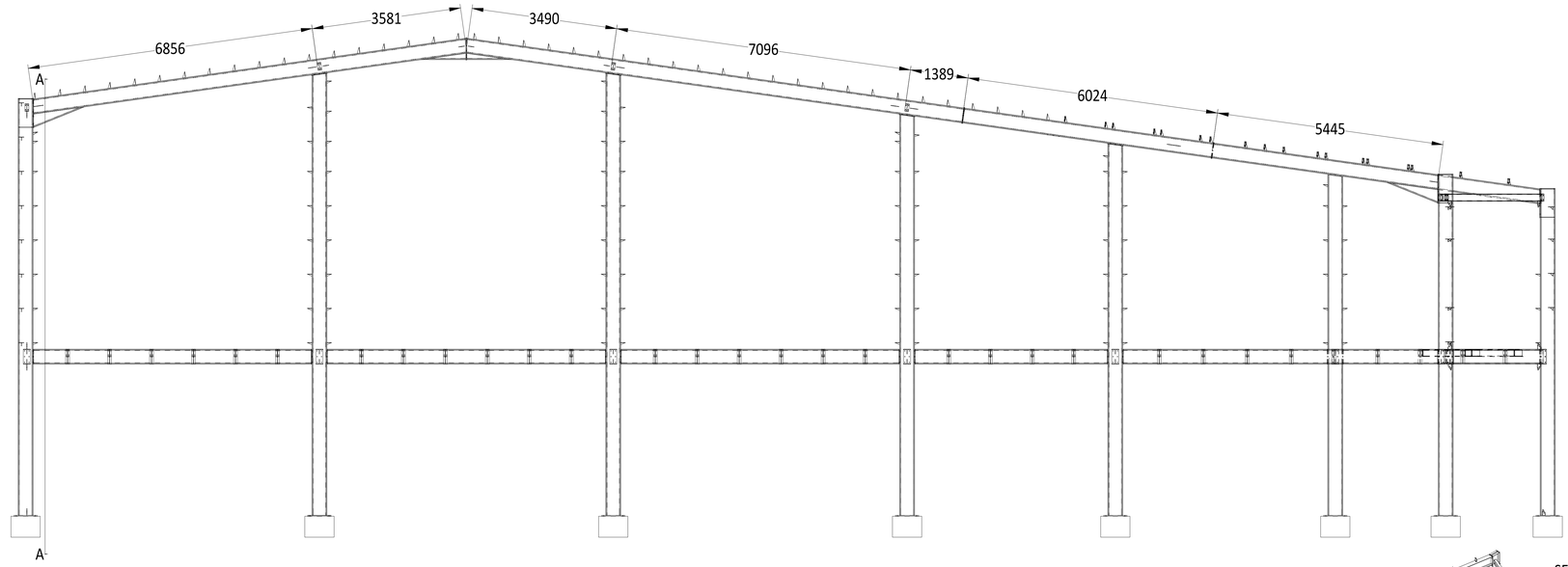

SCALE 1.5:1

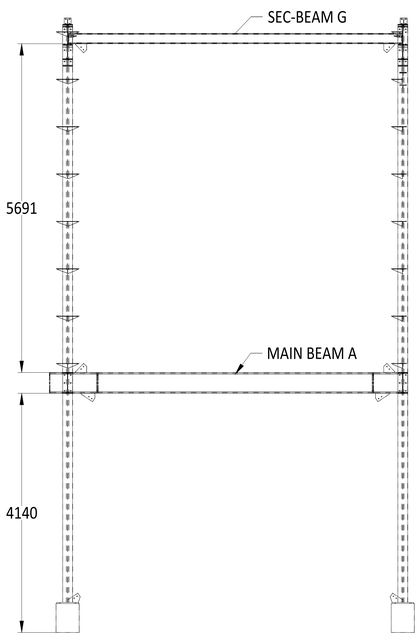

VIEW A-A

SCALE 2:1

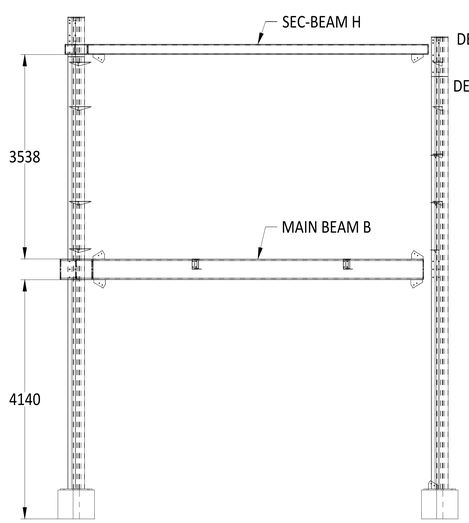

NORMAL TO RIGHT SIDE VIEW MAIN BEAMS
& SEC-BEAMS ERECTION DETAILS
SCALE 2:1

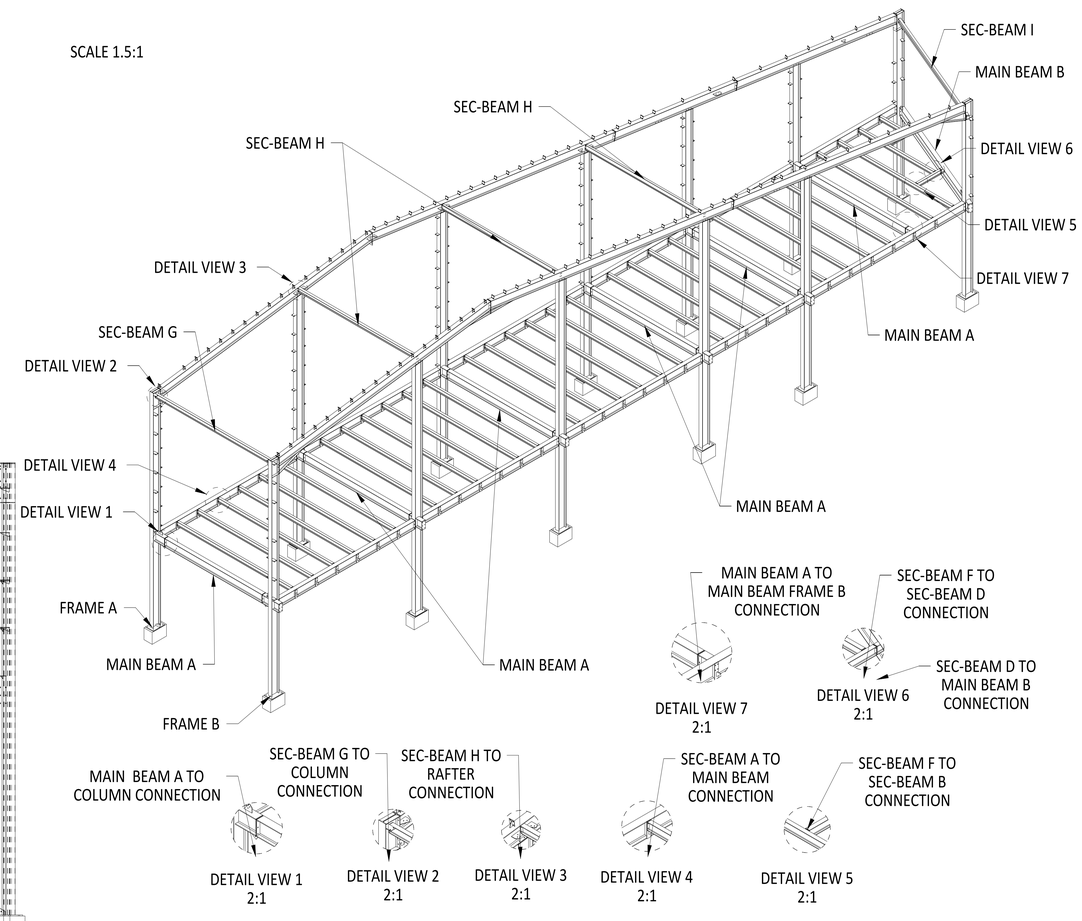

(FRAME-A & FRAME-B) MAIN BEAMS, SECONDARY BEAMS ERECTION DETAILS

ASSEMBLY NO.		TITLE HANGER FRAME-A & B ERECTION DETAILS			
PART NO.			SIZE A0	DWG NO	REV 00
DESIGNER					
APPROVED		SCALE AS SHOWN	RELEASE DATE 21/08/2025	WEIGHT Kg.	QTY.

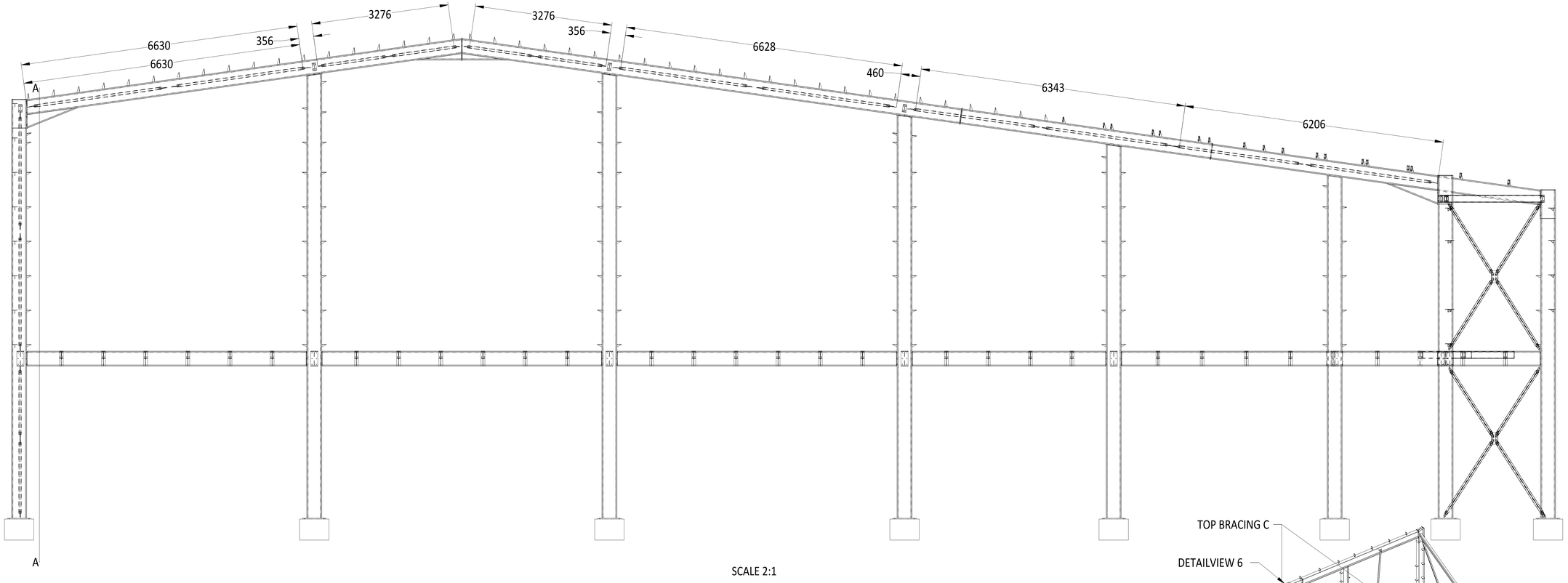

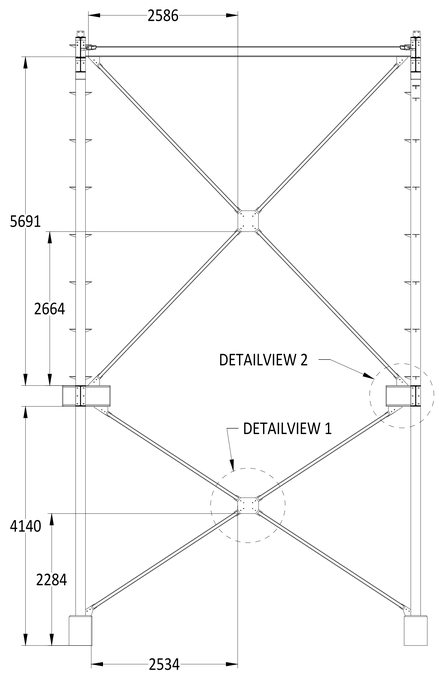

SECTION A-A
SCALE 2:1

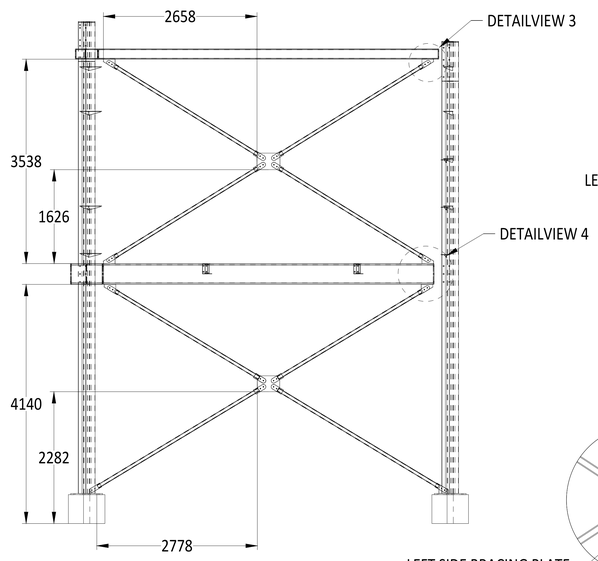

NORMAL TO RIGHT SIDE VIEW
BRACING ERECTION DETAILS
SCALE 2:1

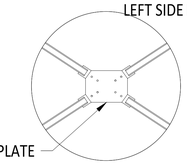

DETAILVIEW 1
2:1

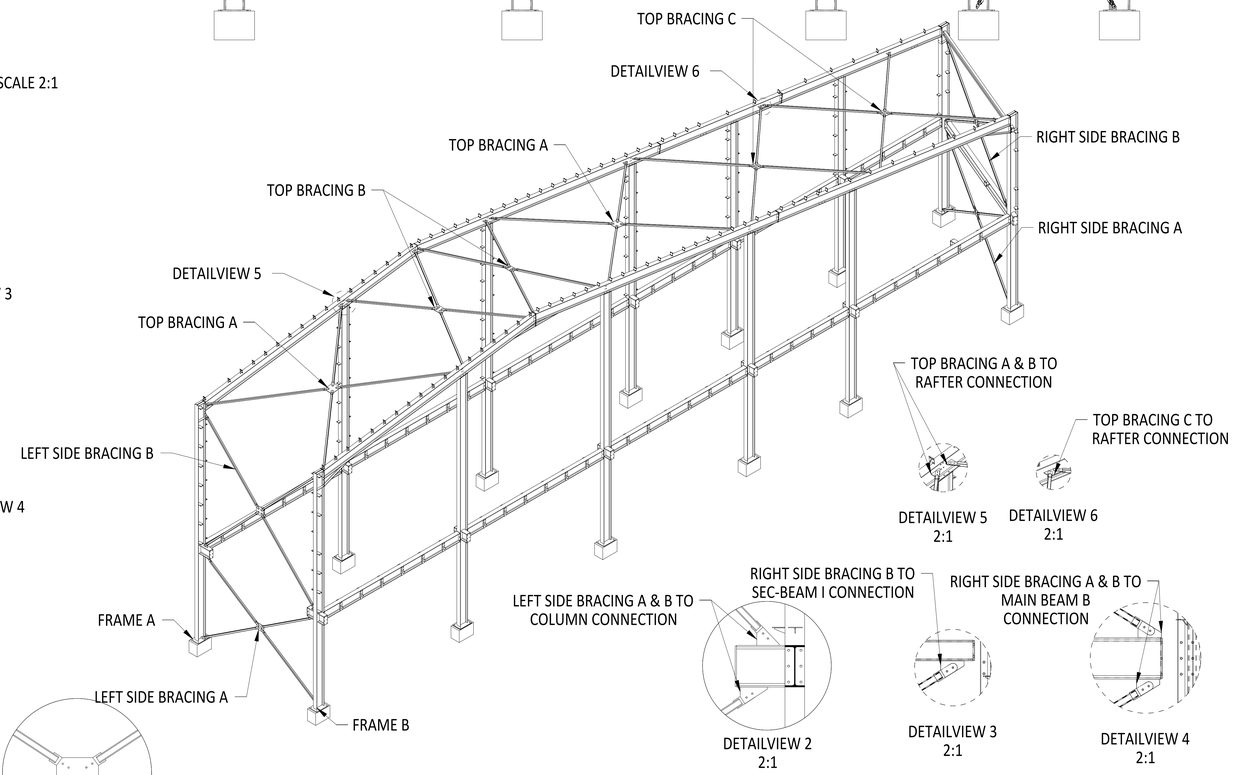

(FRAME-A & FRAME-B) BRACING ERECTION DETAILS

ASSEMBLY NO.		TITLE	HANGER FRAME-A & B ERECTION DETAILS		
PART NO.			SIZE	DWG NO	REV
DESIGNER			A0		00
APPROVED		SCALE AS SHOWN	RELEASE DATE 21/08/2025	WEIGHT Kg.	QTY.

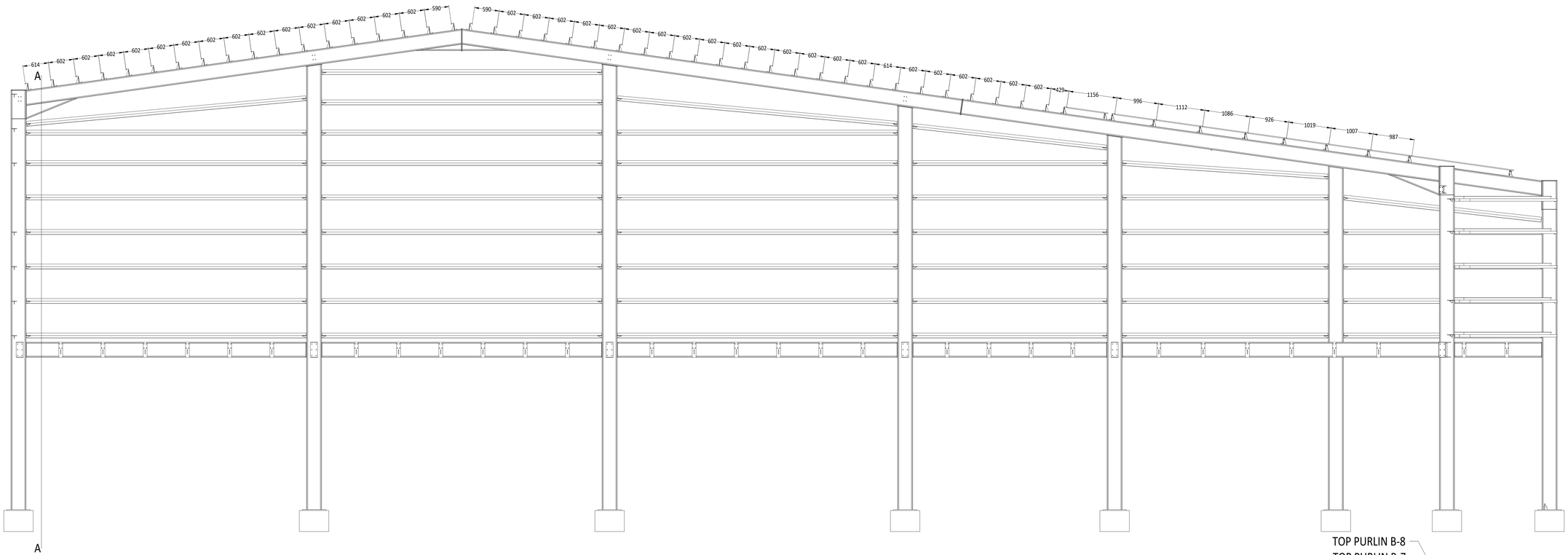

SCALE 2:1

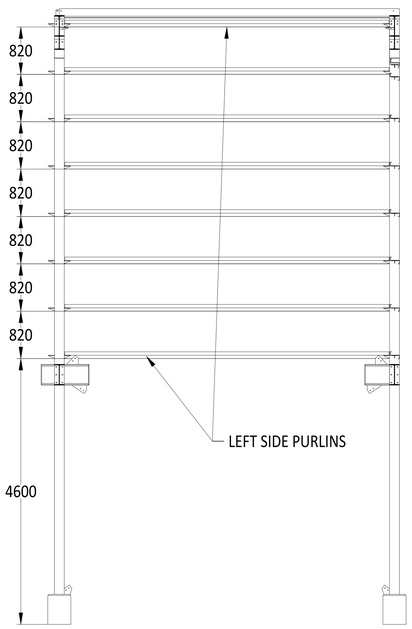

SECTION A-A
SCALE 2:1

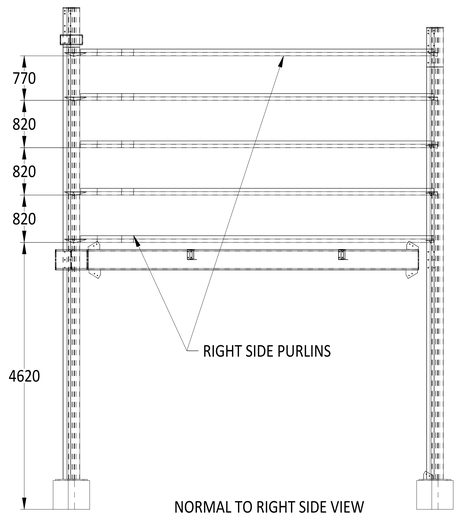

NORMAL TO RIGHT SIDE VIEW
PURLINS ERECTION DETAILS
SCALE 2:1

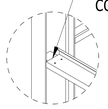

DETAILVIEW 1
4:1

DETAILVIEW 2
4:1

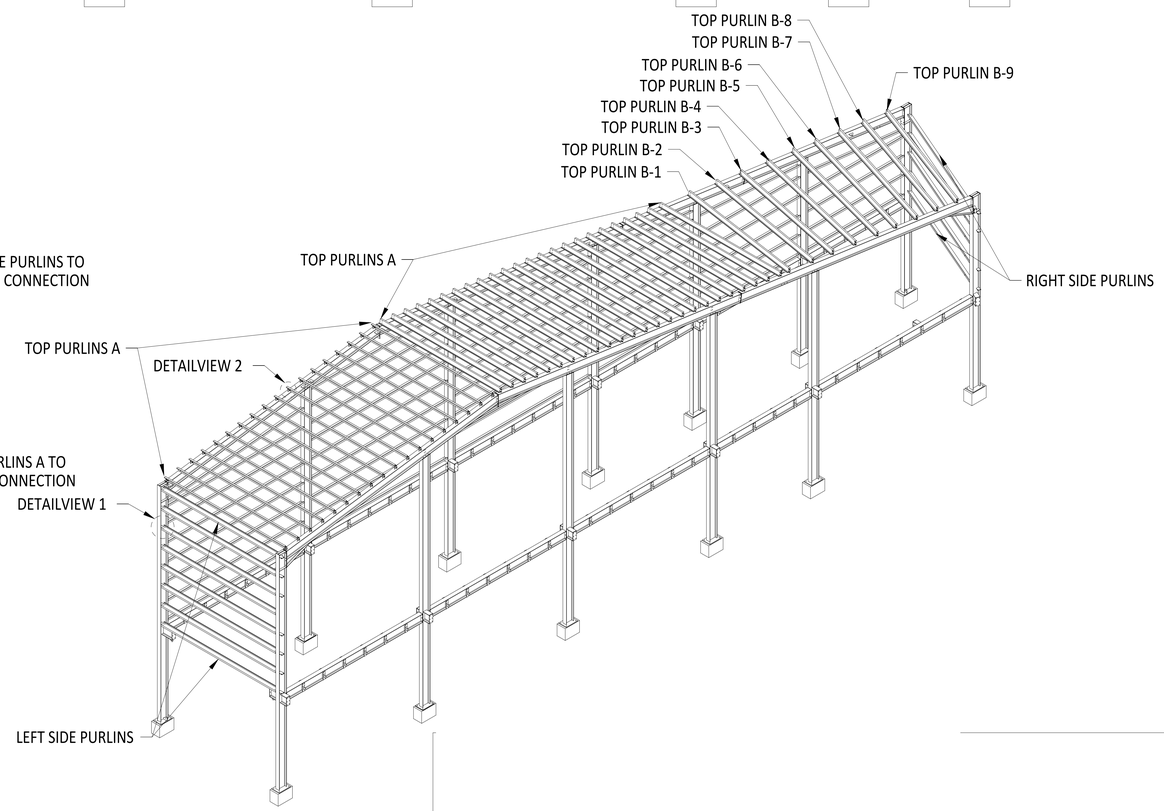

(FRAME-A & FRAME-B) PURLINS ERECTION DETAILS

ASSEMBLY NO.	TITLE HANGER FRAME-A & B ERECTION DETAILS				
PART NO.		SIZE A0	DWG NO		REV 00
DESIGNER					
APPROVED		SCALE AS SHOWN	RELEASE DATE 21/08/2025	WEIGHT Kg.	QTY.

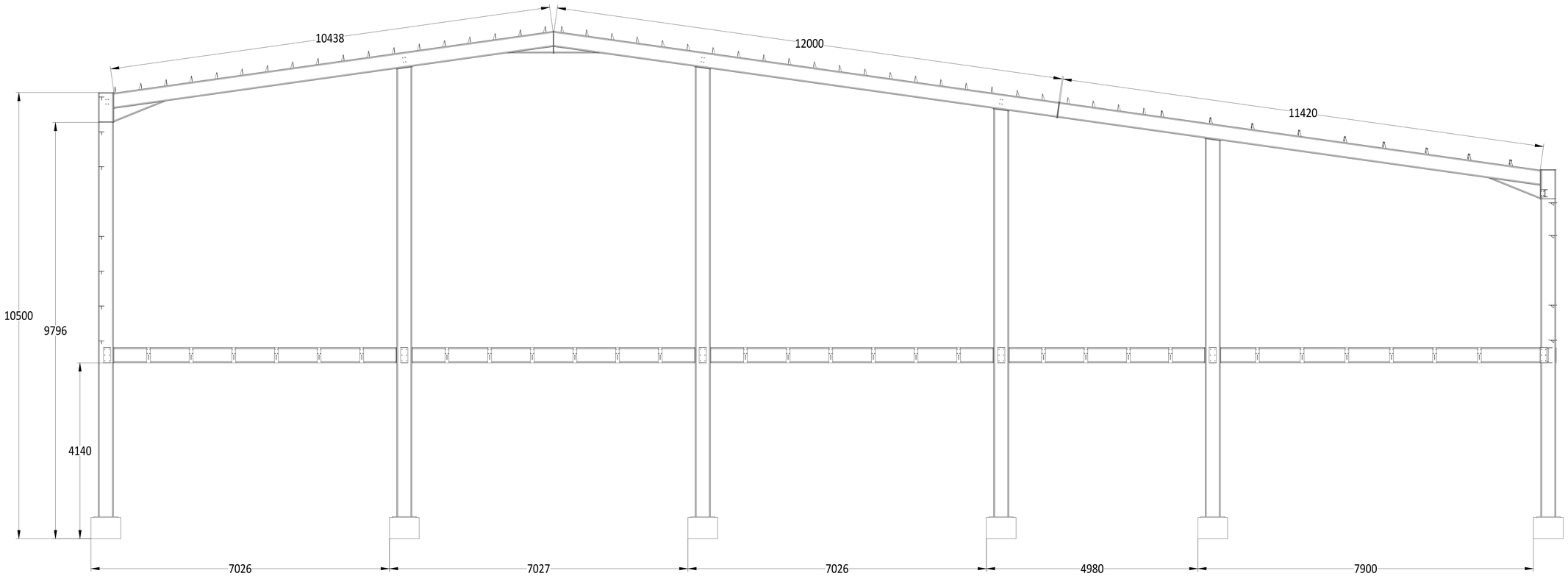

SCALE 2:1

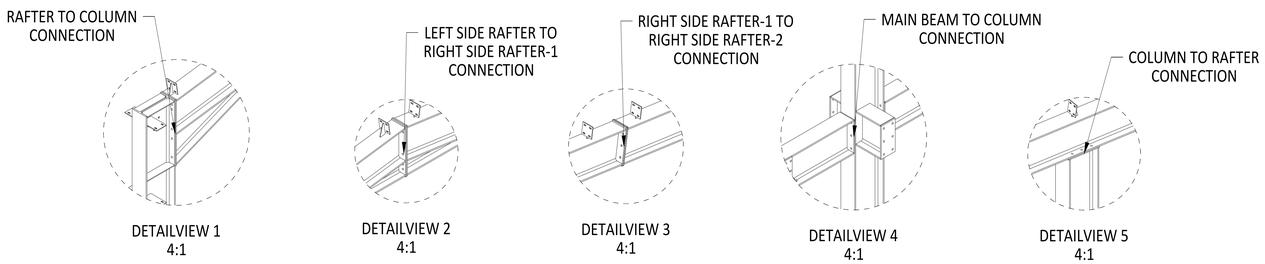

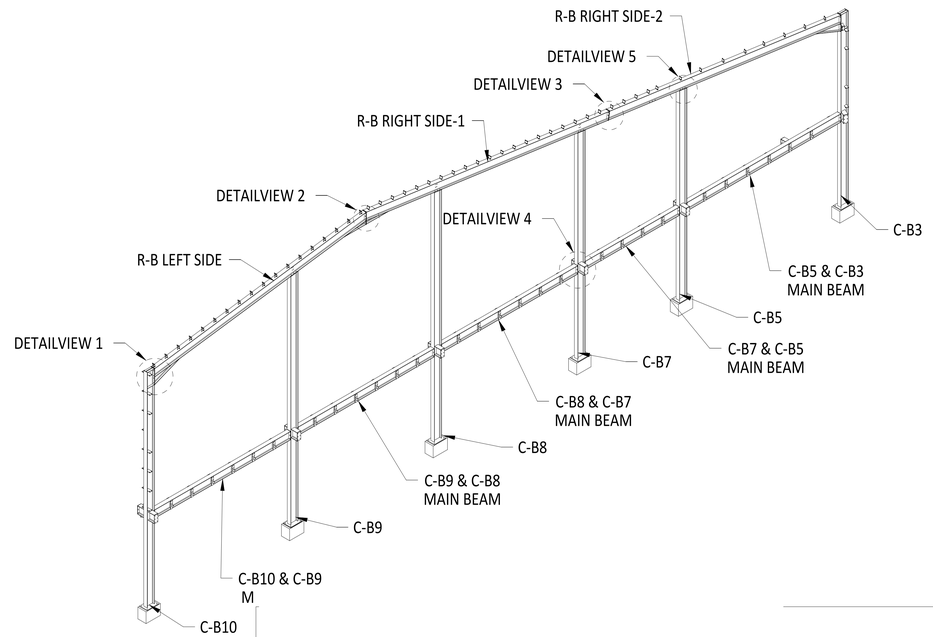

FRAME-B ERECTION DETAILS

ASSEMBLY NO.		TITLE HANGER FRAME B ERECTION DETAILS			
PART NO.			SIZE A0	DWG NO	REV 00
DESIGNER					
APPROVED		SCALE AS SHOWN	RELEASE DATE 21/08/2025	WEIGHT Kg.	QTY.

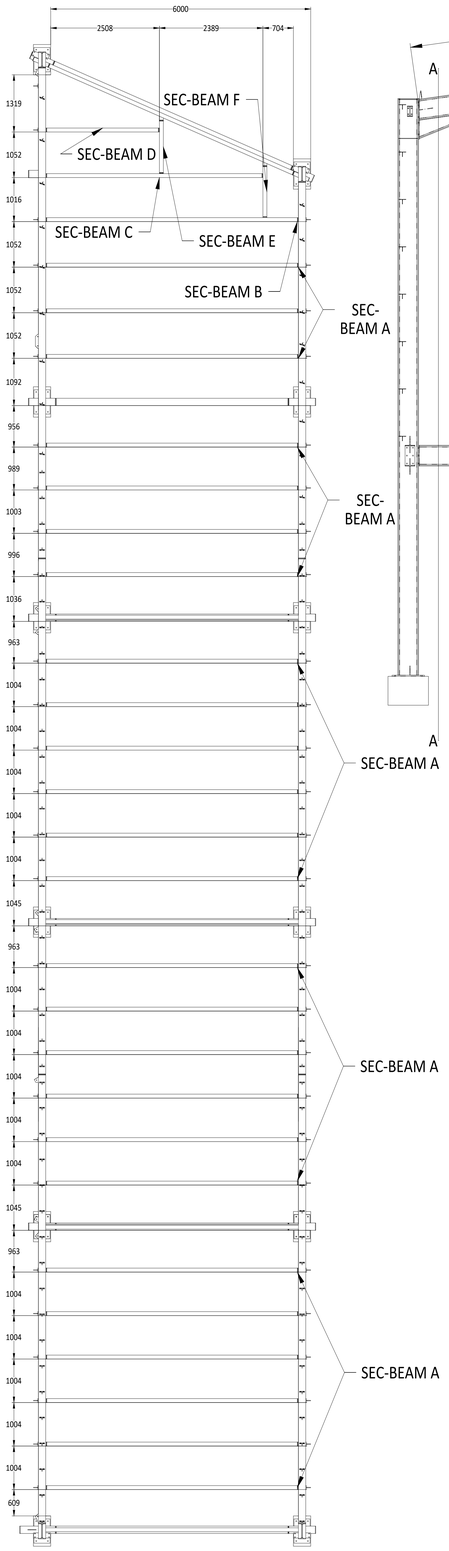

SCALE 2:1

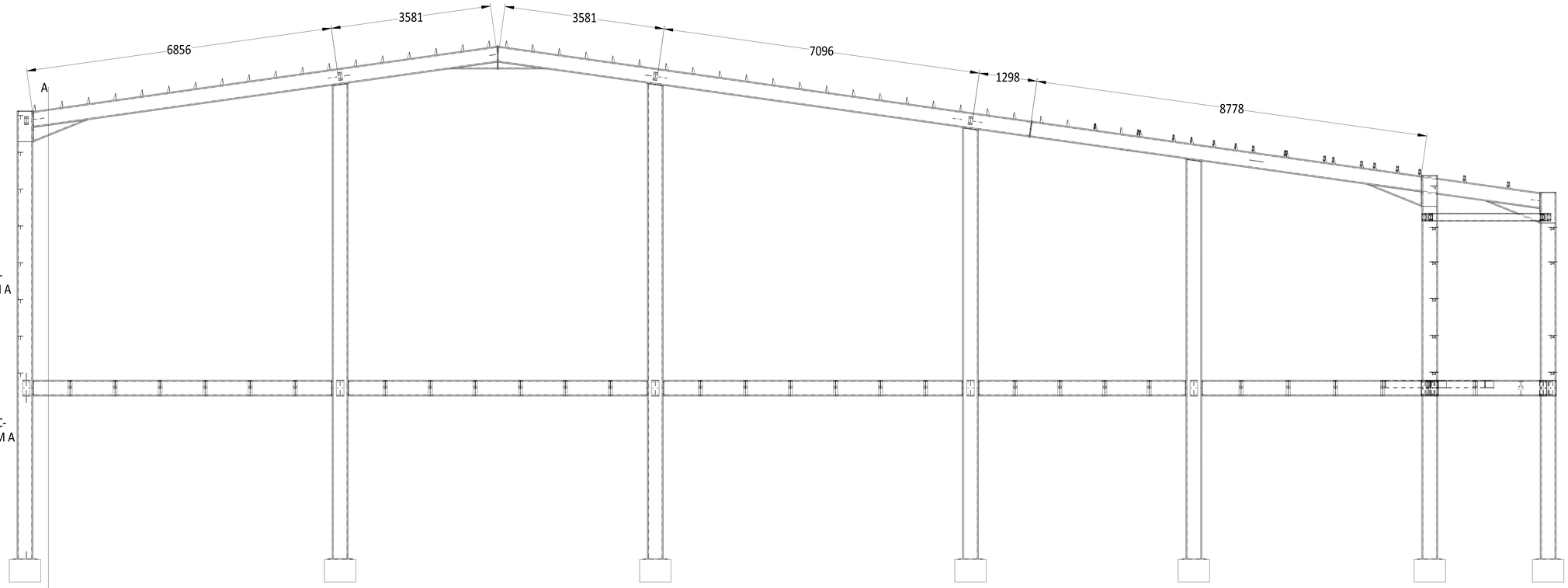

SCALE 2:1

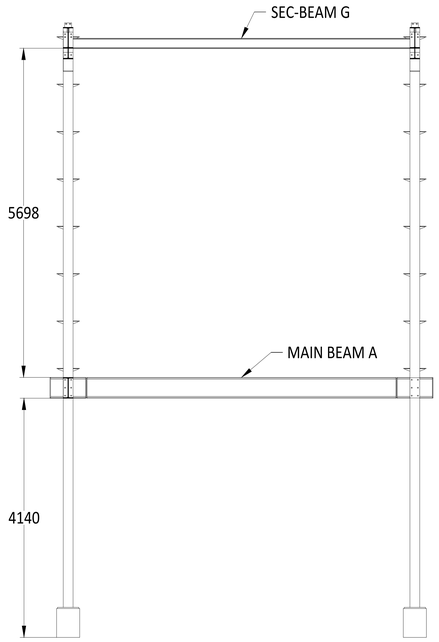

SECTION A-A
SCALE 2:1

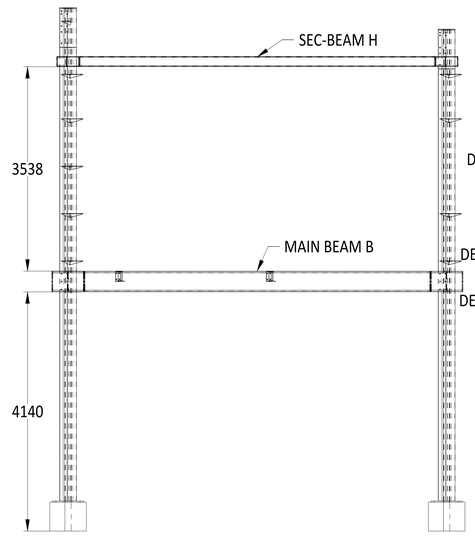

NORMAL TO RIGHT SIDE VIEW MAIN BEAMS
& SEC-BEAMS ERECTION DETAILS
SCALE 2:1

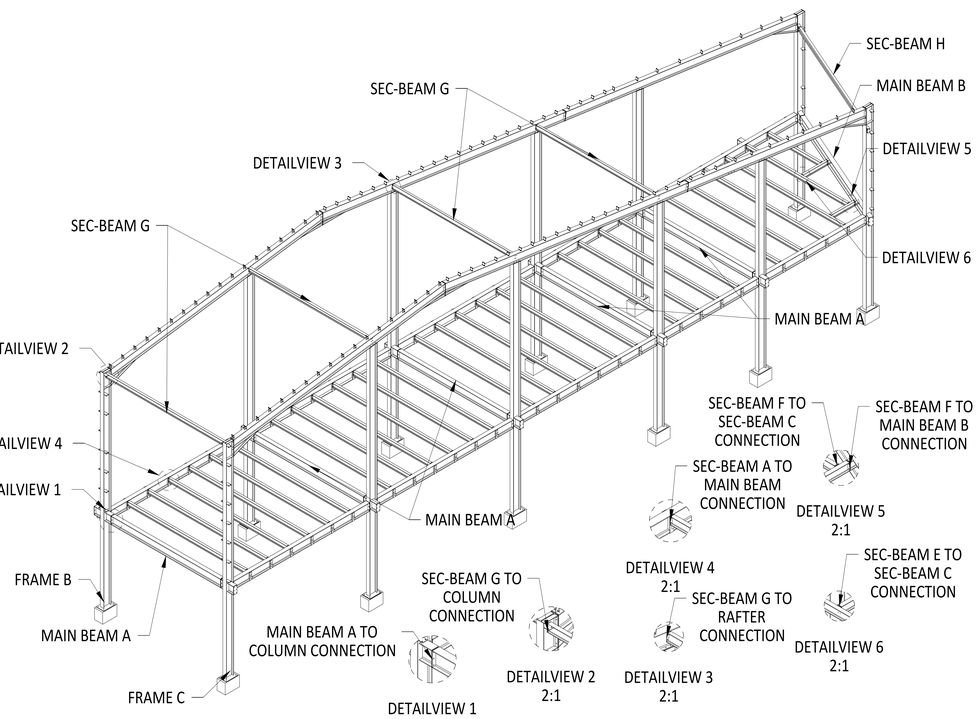

(FRAME-B & FRAME-C) MAIN BEAMS, SECONDARY BEAMS ERECTION DETAILS

ASSEMBLY NO.	TITLE HANGER FRAME B & C ERECTION DETAILS				
PART NO.		SIZE A0	DWG NO		REV 00
DESIGNER					
APPROVED		SCALE AS SHOWN	RELEASE DATE 21/08/2025	WEIGHT Kg.	QTY.

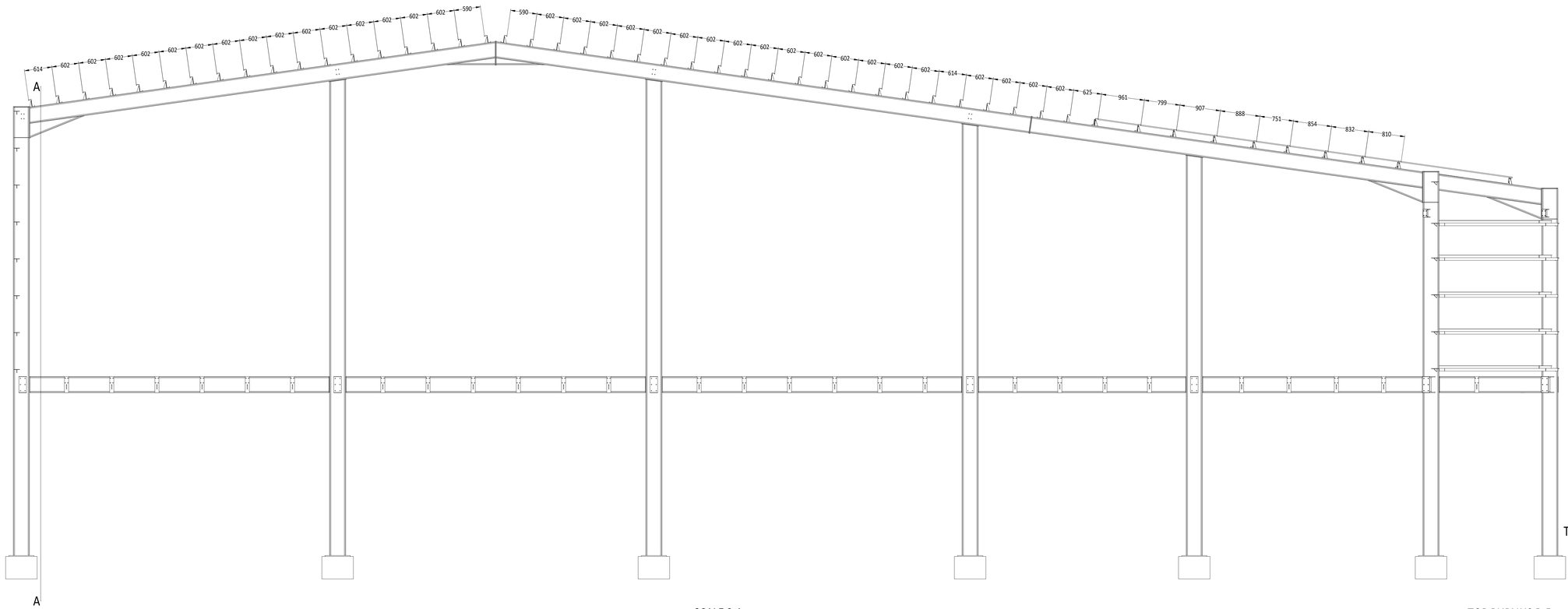

SCALE 2:1

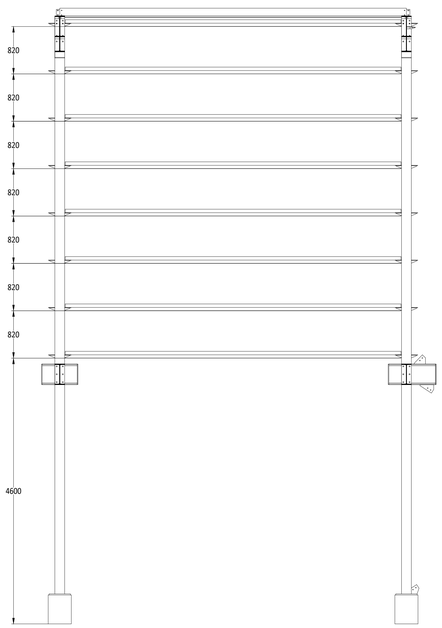

SECTION A-A

SCALE 2:1

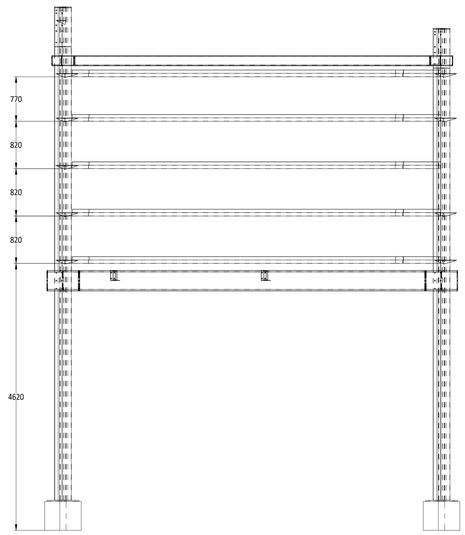

NORMAL TO RIGHT SIDE VIEW
PURLINS ERECTION DETAILS
SCALE 2:1

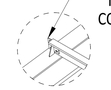

DETAILVIEW 1
4:1

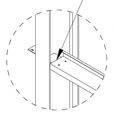

DETAILVIEW 2
4:1

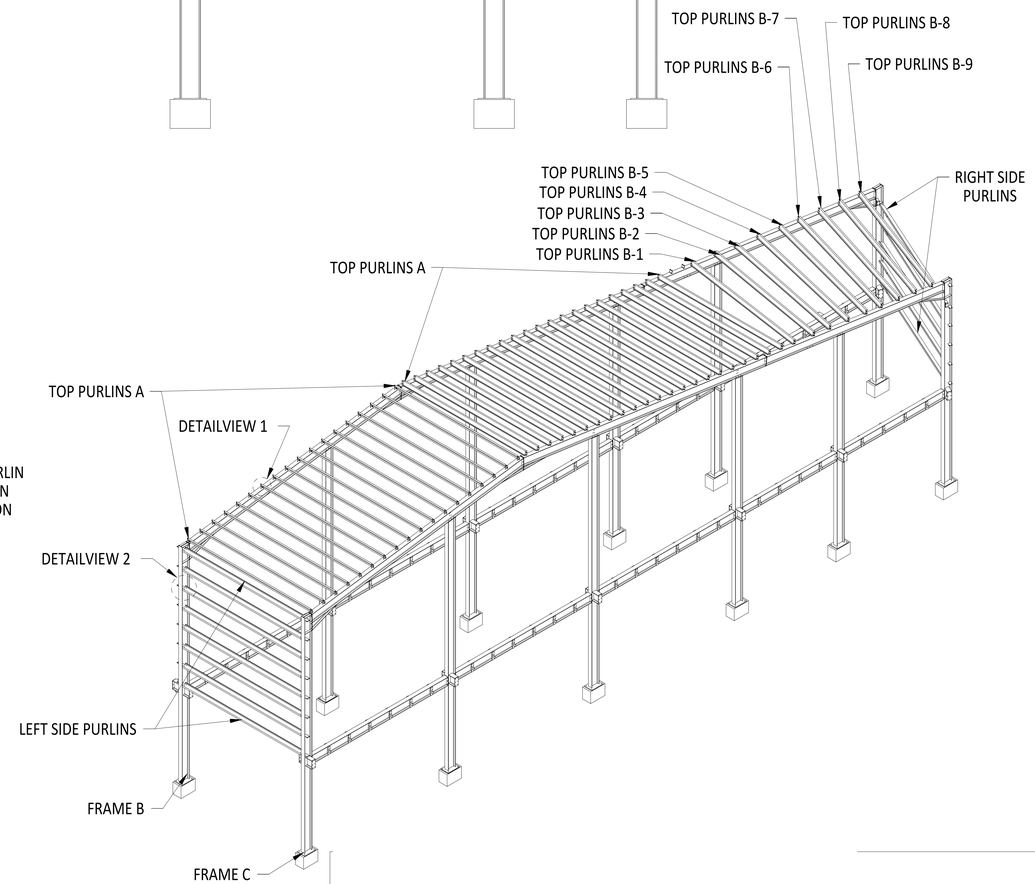

(FRAME-B & FRAME-C) PURLINS ERECTION DETAILS

ASSEMBLY NO.		TITLE HANGER FRAME B & C ERECTION DETAILS			
PART NO.			SIZE A0	DWG NO	REV 00
DESIGNER			RELEASE DATE 21/08/2025	WEIGHT Kg.	
APPROVED		SCALE AS SHOWN			QTY.

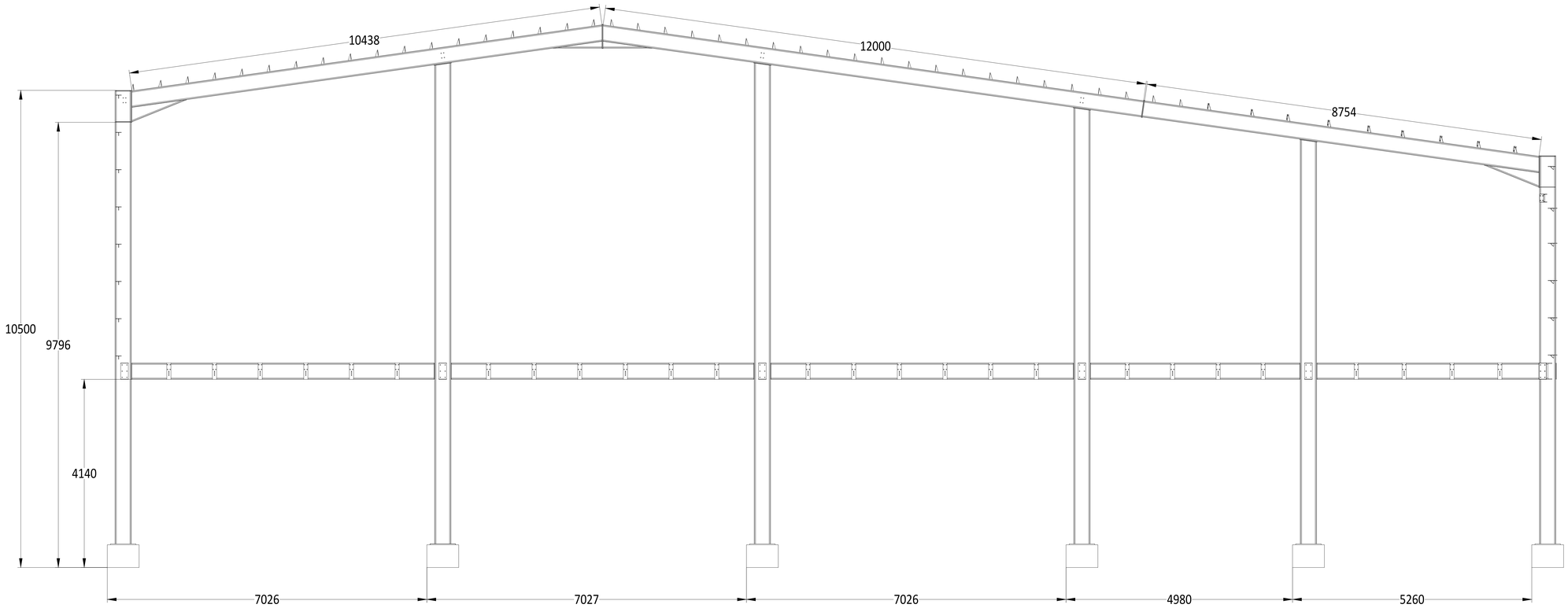

SCALE 2:1

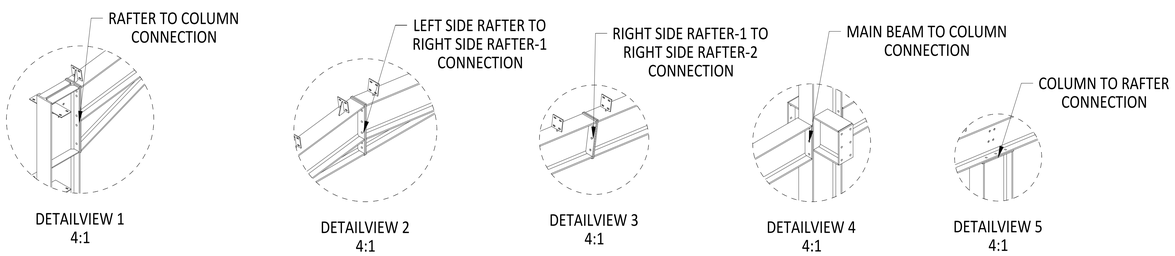

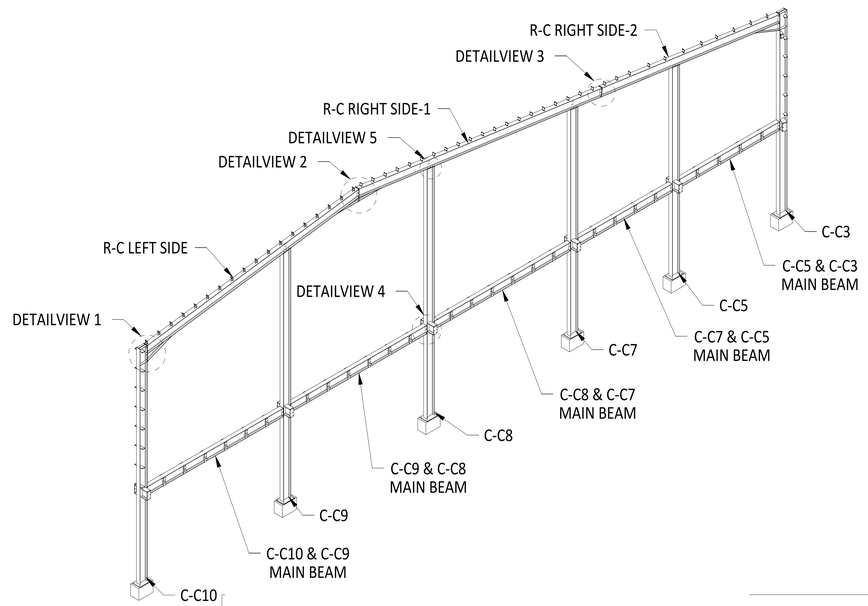

FRAME-C ERECTION DETAILS

ASSEMBLY NO.		TITLE HANGER FRAME C ERECTION DETAILS			
PART NO.			SIZE A0	DWG NO	REV 00
DESIGNER					
APPROVED		SCALE AS SHOWN	RELEASE DATE 21/08/2025	WEIGHT Kg.	QTY.

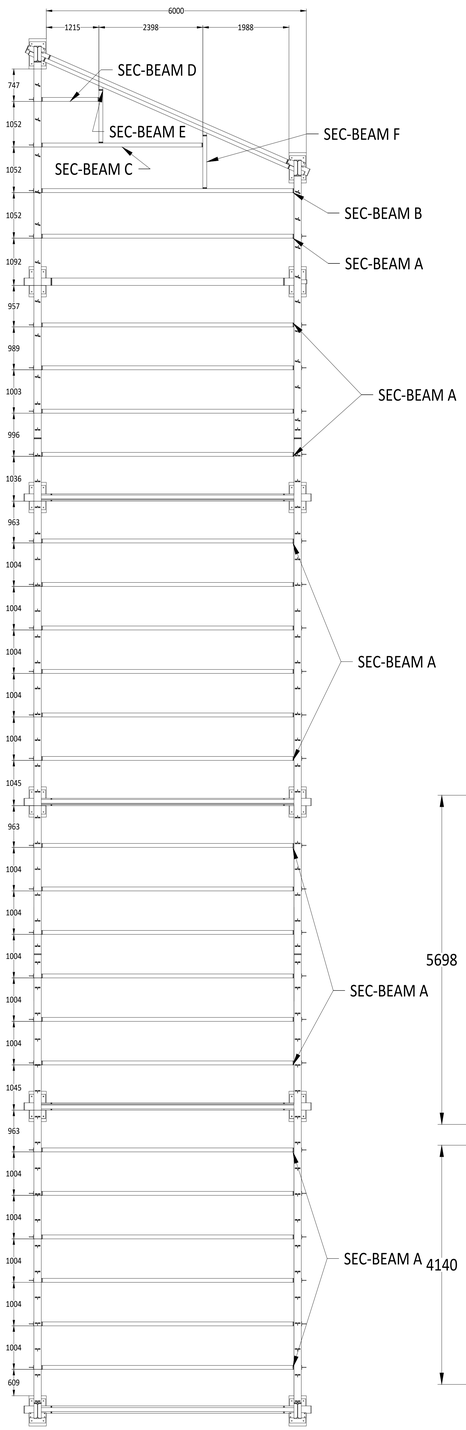

SCALE 2:1

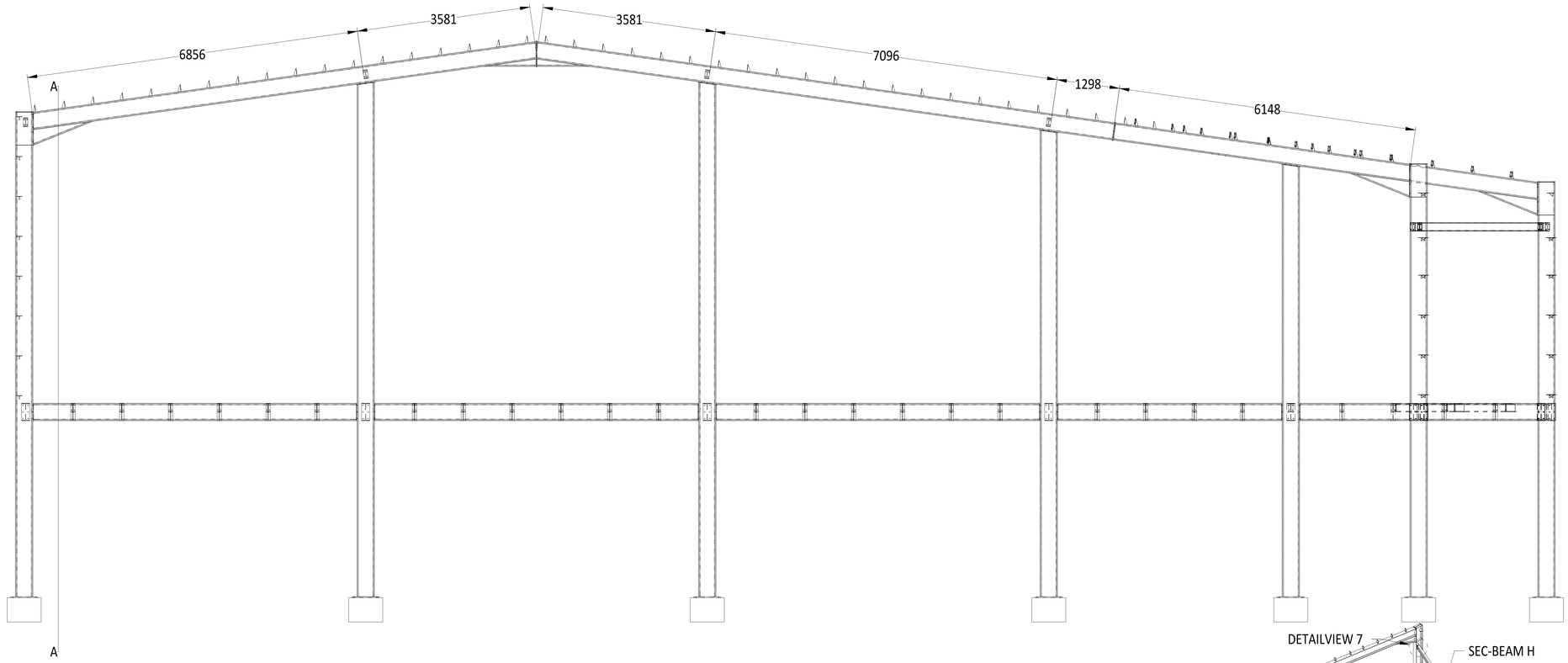

SCALE 2:1

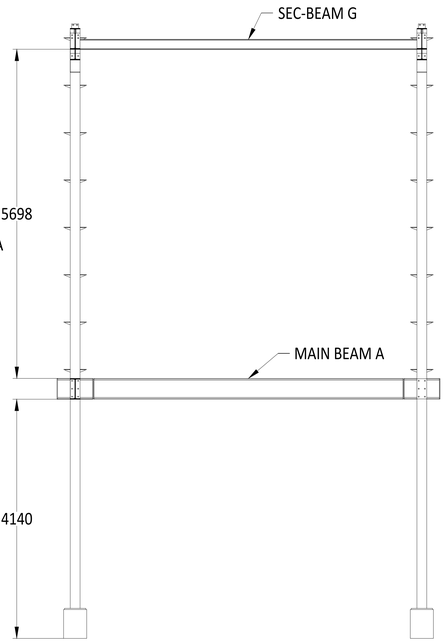

SECTION A-A
SCALE 2:1

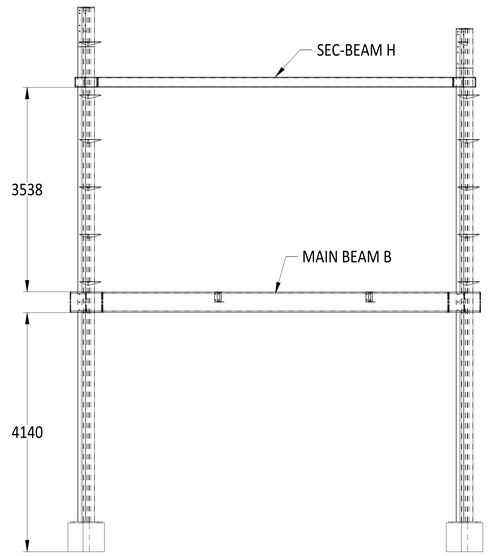

NORMAL TO RIGHT SIDE VIEW MAIN BEAMS
& SEC-BEAMS ERECTION DETAILS
SCALE 2:1

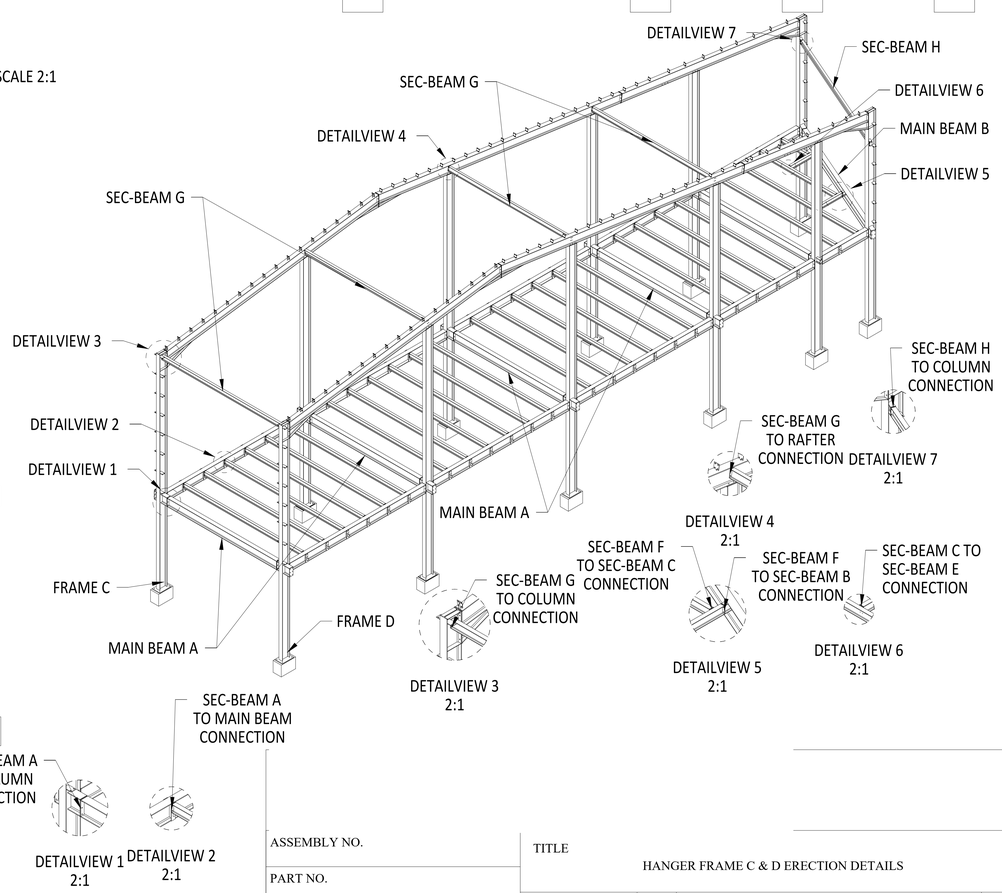

(FRAME-C & FRAME-D) MAIN BEAMS, SECONDARY BEAMS ERECTION DETAILS

ASSEMBLY NO.		TITLE	HANGER FRAME C & D ERECTION DETAILS		
PART NO.			SIZE A0	DWG NO	REV 00
DESIGNER			RELEASE DATE 21/08/2025	WEIGHT Kg.	
APPROVED		SCALE AS SHOWN			QTY.

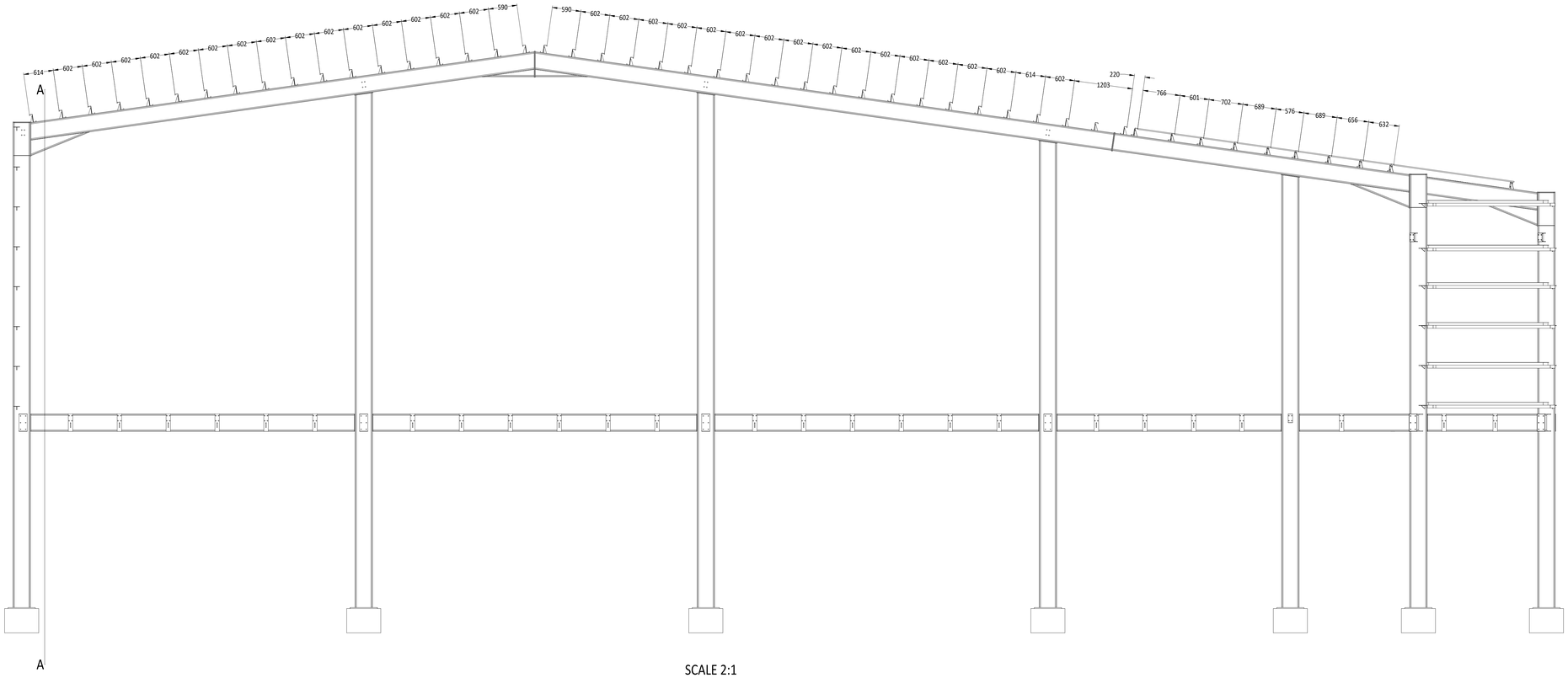

SCALE 2:1

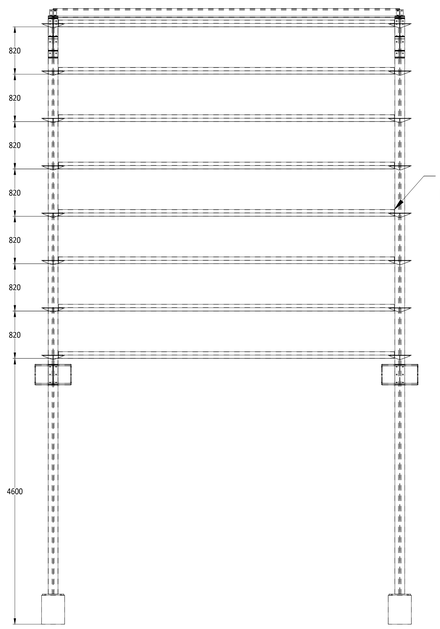

SECTION A-A
SCALE 2:1

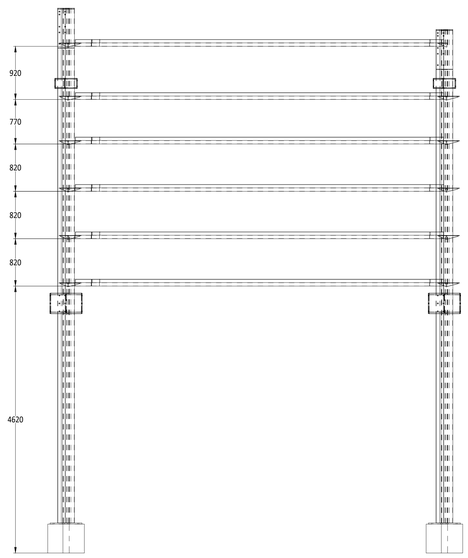

NORMAL TO RIGHT SIDE VIEW
PURLINS ERECTION DETAILS
SCALE 2:1

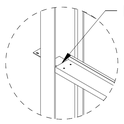

DETAILVIEW 1
4:1

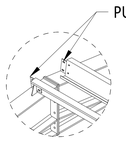

DETAILVIEW 2
4:1

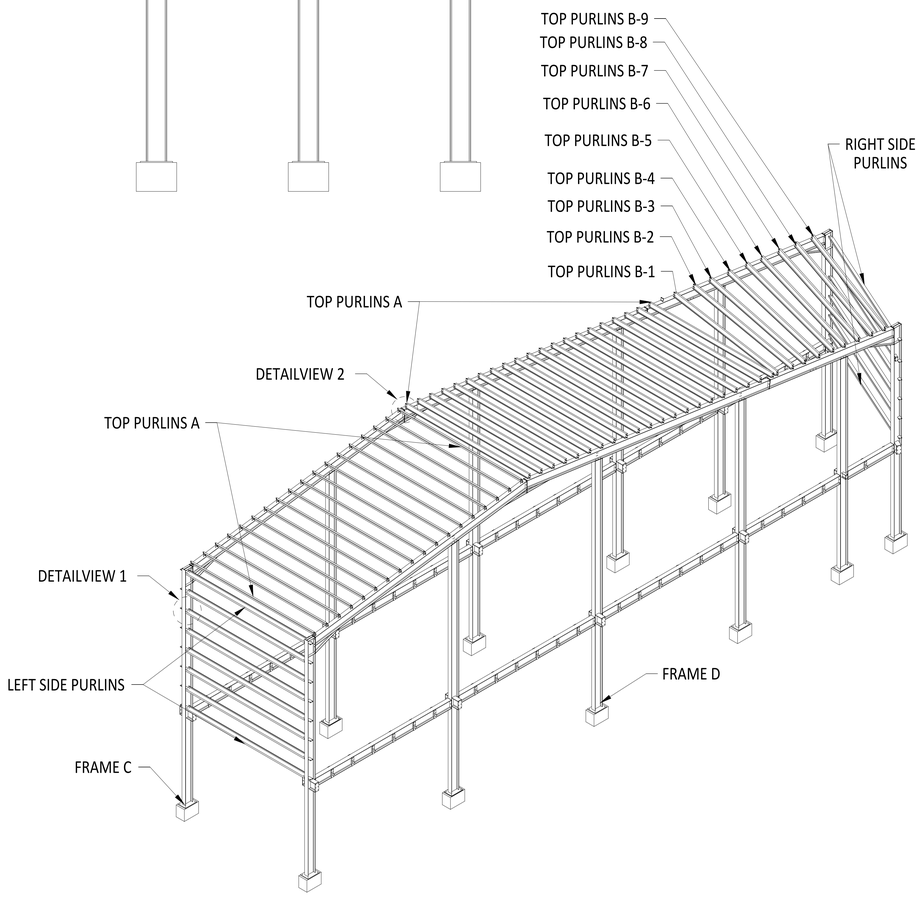

(FRAME-C & FRAME-D) PURLINS ERECTION DETAILS

ASSEMBLY NO.	TITLE HANGER FRAME C & D ERECTION DETAILS				
PART NO.		SIZE A0	DWG NO		REV 00
DESIGNER		SCALE AS SHOWN	RELEASE DATE 21/08/2025	WEIGHT Kg.	QTY.
APPROVED					

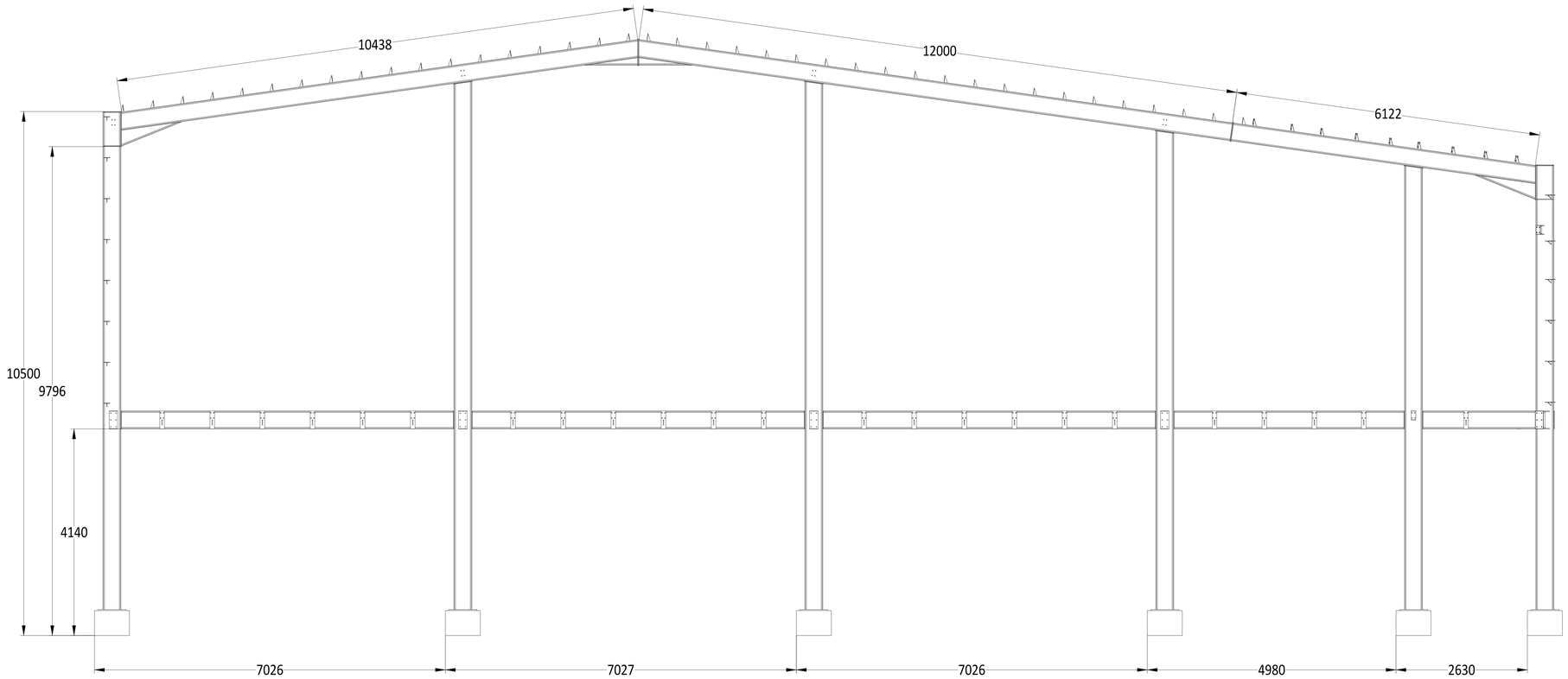

SCALE 2:1

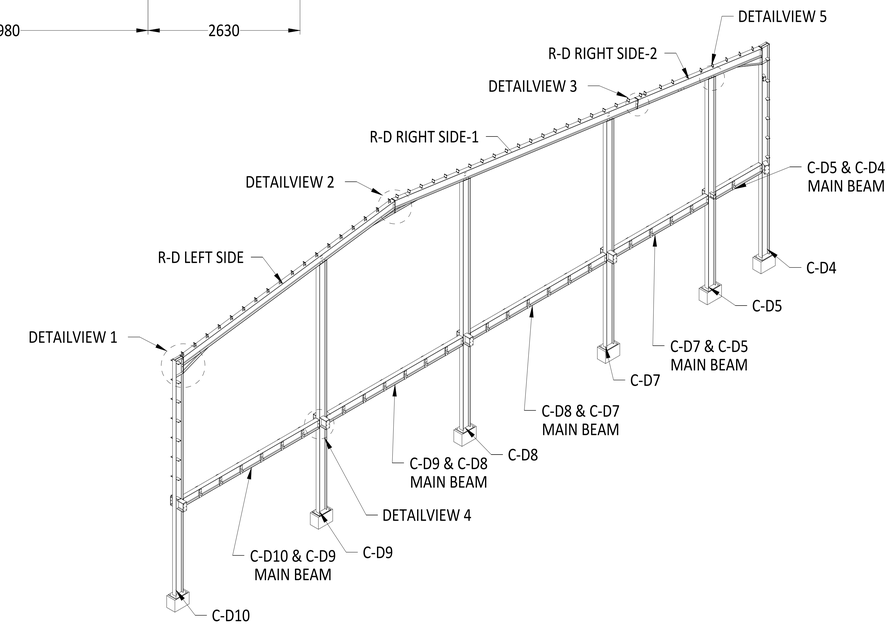

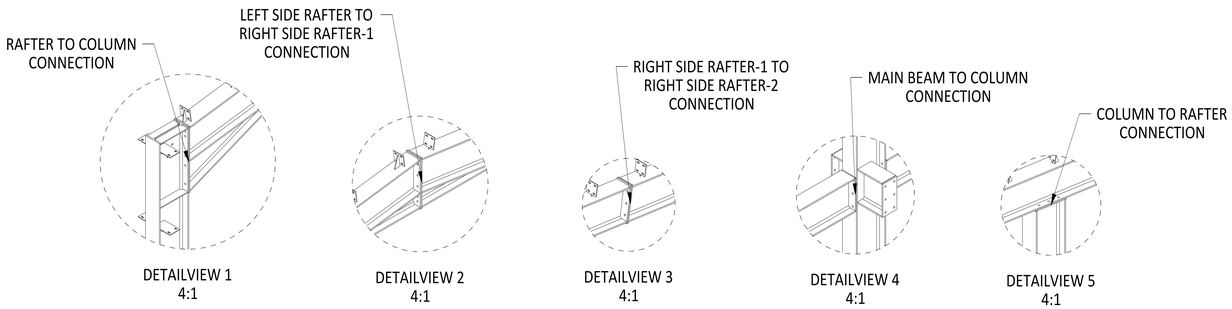

FRAME-D ERECTION DETAILS

ASSEMBLY NO.		TITLE	HANGER FRAME D ERECTION DETAILS		
PART NO.			SIZE A0	DWG NO	REV 00
DESIGNER					
APPROVED		SCALE AS SHOWN	RELEASE DATE 21/08/2025	WEIGHT Kg.	QTY.

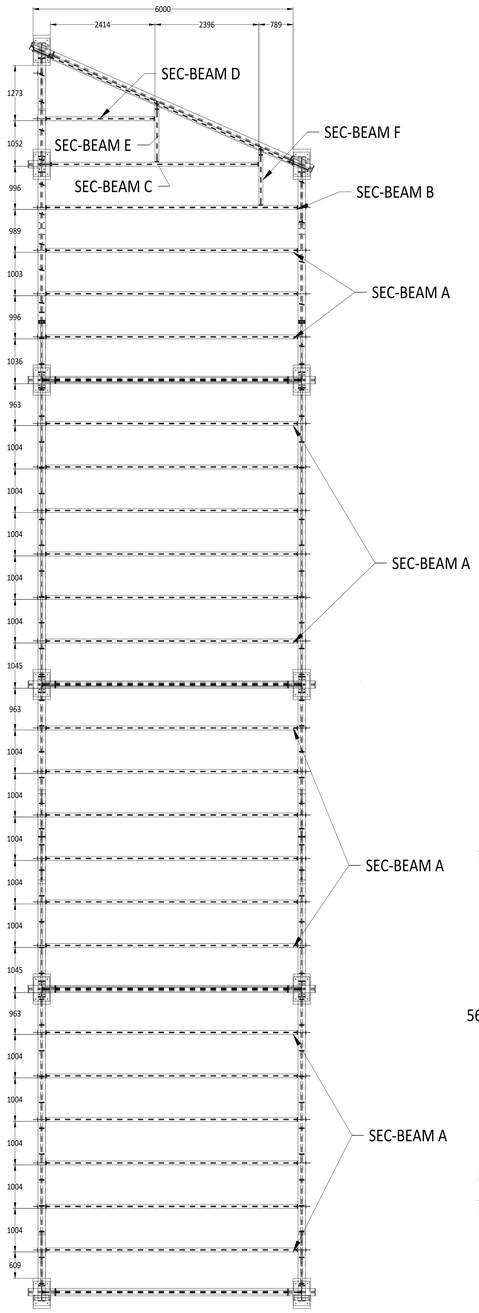

SCALE 1.5:1

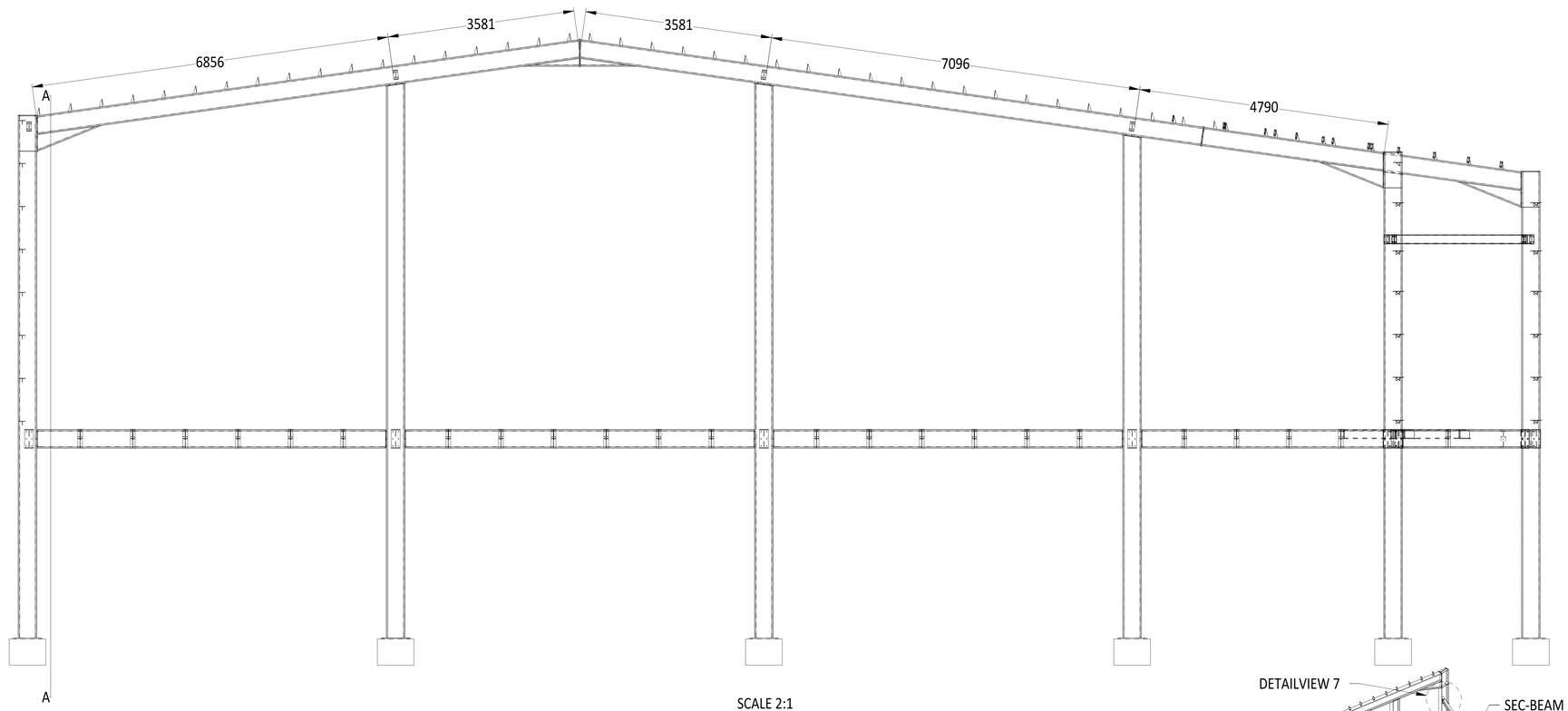

SCALE 2:1

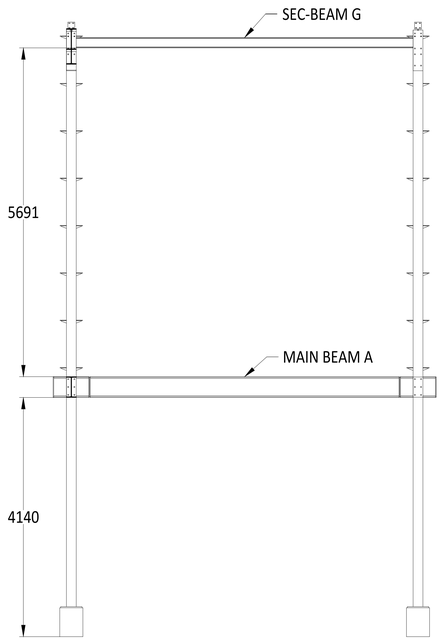

SECTION A-A
SCALE 2:1

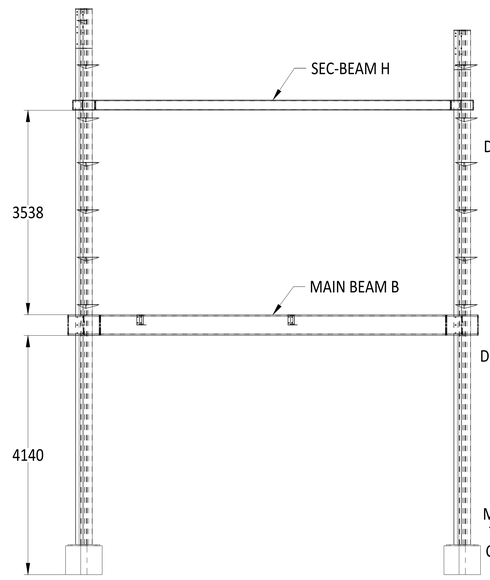

NORMAL TO RIGHT SIDE VIEW MAIN BEAMS
& SEC-BEAMS ERECTION DETAILS
SCALE 2:1

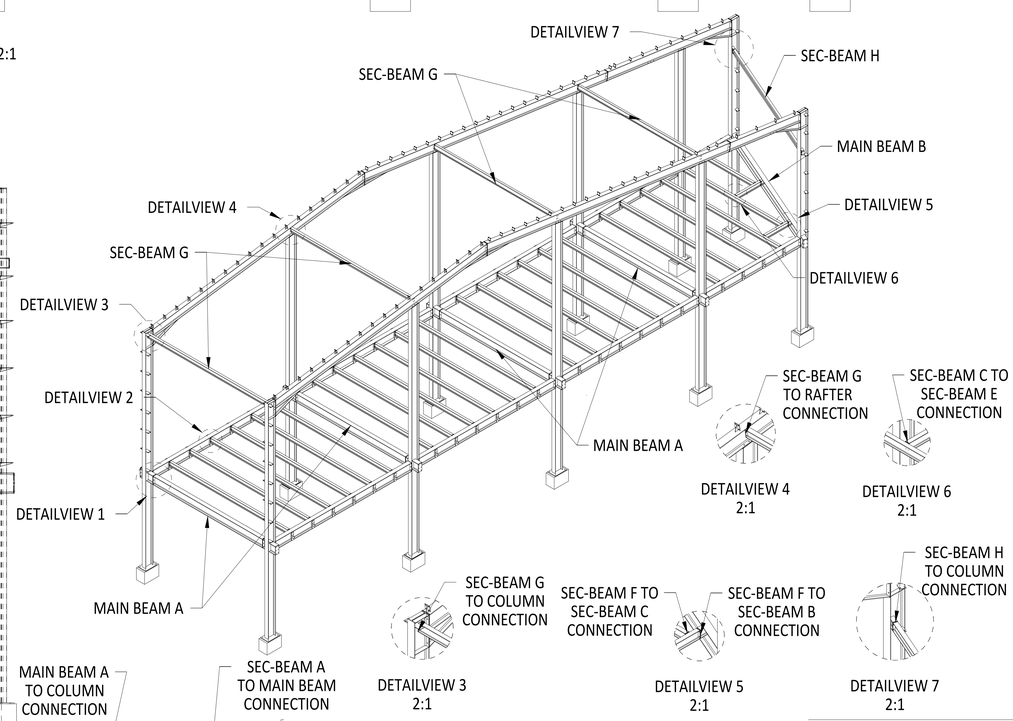

(FRAME-D & FRAME-E) MAIN BEAMS, SECONDARY BEAMS ERECTION DETAILS

ASSEMBLY NO.	TITLE HANGER FRAME D & E ERECTION DETAILS			
PART NO.		SIZE A0	DWG NO	REV 00
DESIGNER				
APPROVED		SCALE AS SHOWN	RELEASE DATE 21/08/2025	WEIGHT Kg. / QTY.

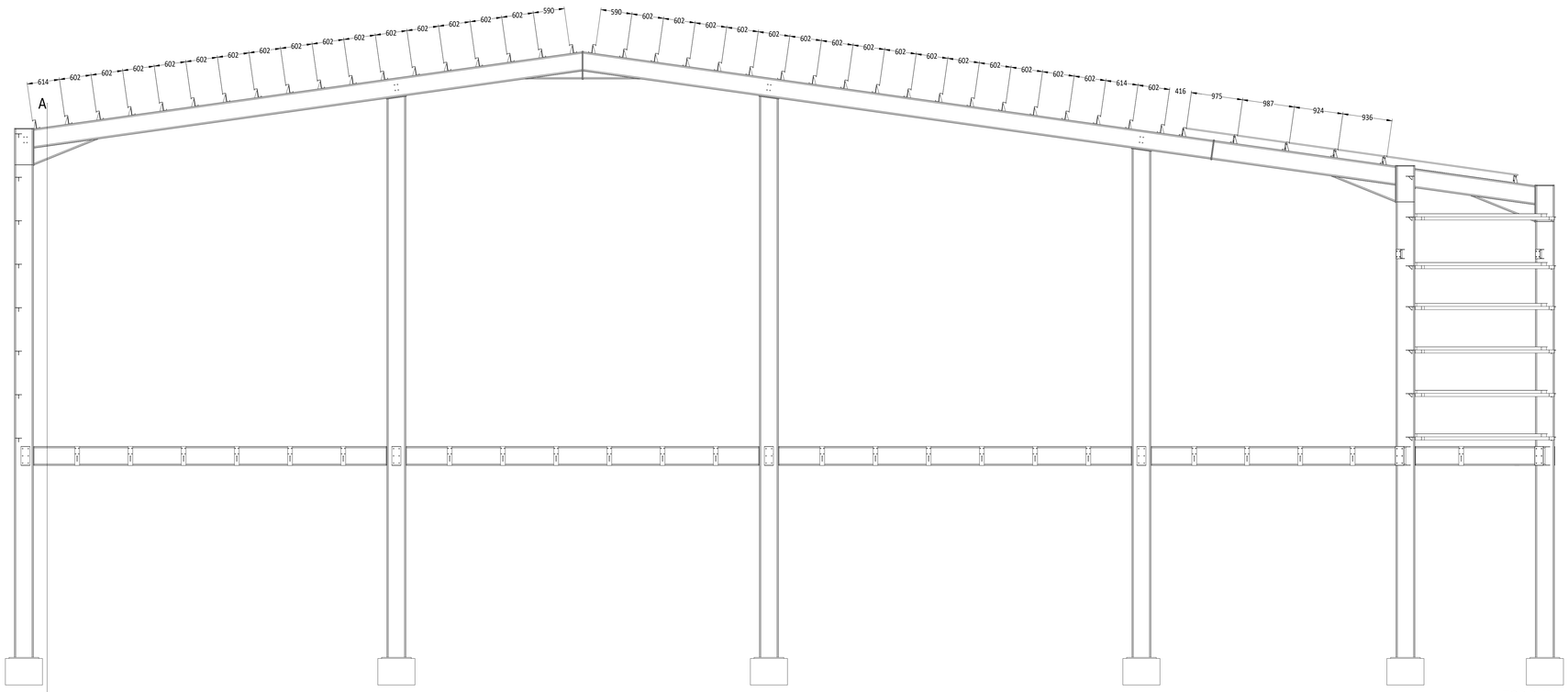

SCALE 2:1

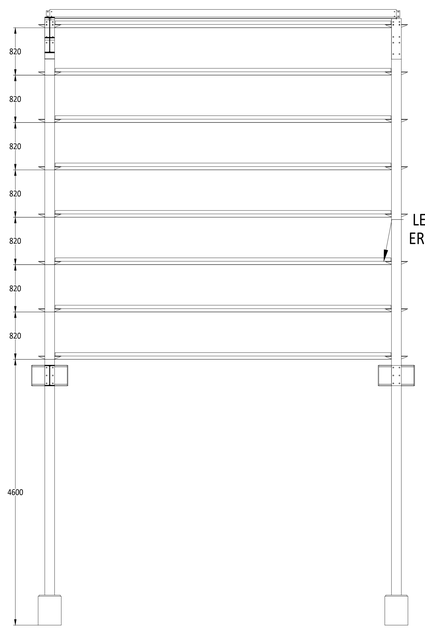

SECTION A-A

SCALE 2:1

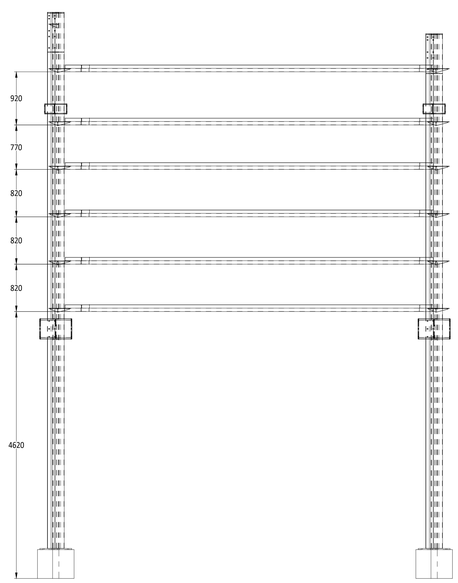

NORMAL TO RIGHT SIDE VIEW
PURLINS ERECTION DETAILS
SCALE 2:1

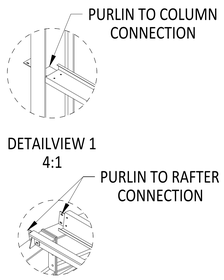

DETAILVIEW 1
4:1

DETAILVIEW 2
4:1

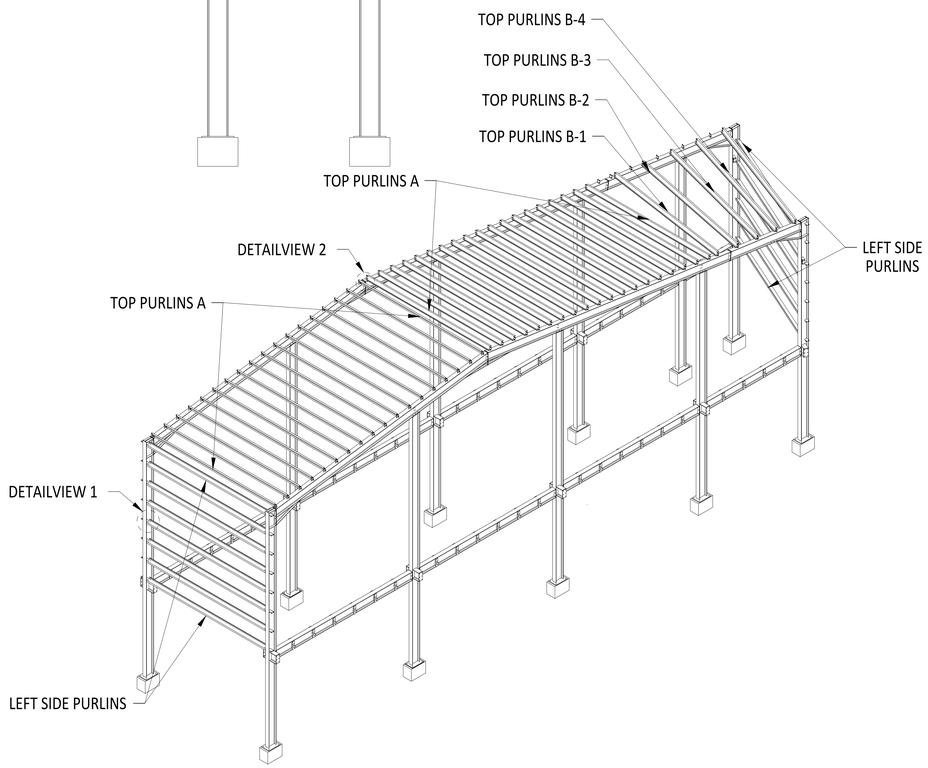

(FRAME-D & FRAME-E) PURLINS ERECTION DETAILS

ASSEMBLY NO.	TITLE HANGER FRAME D & E ERECTION DETAILS				
PART NO.		SIZE A0	DWG NO		REV 00
DESIGNER					
APPROVED		SCALE AS SHOWN	RELEASE DATE 21/08/2025	WEIGHT Kg.	QTY.

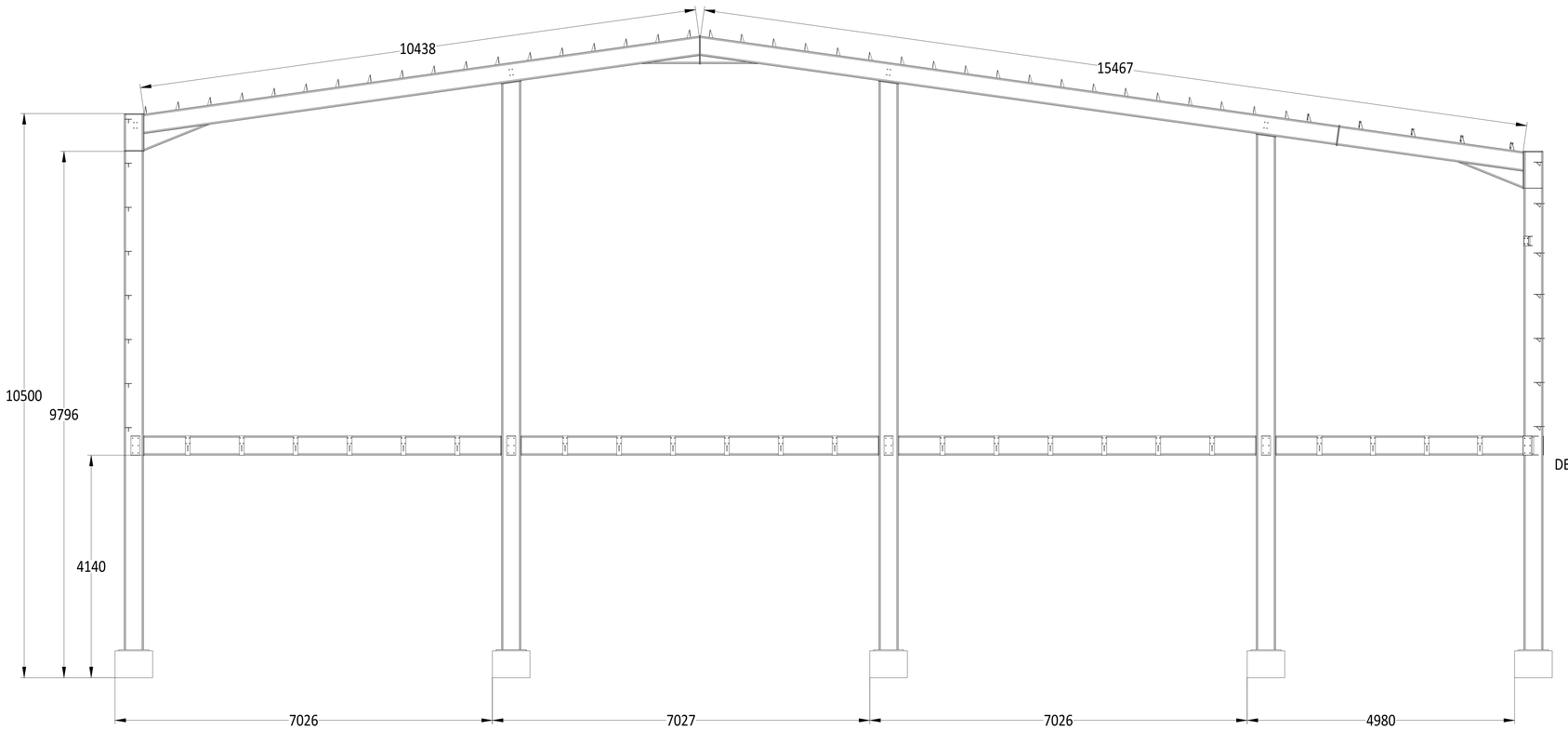

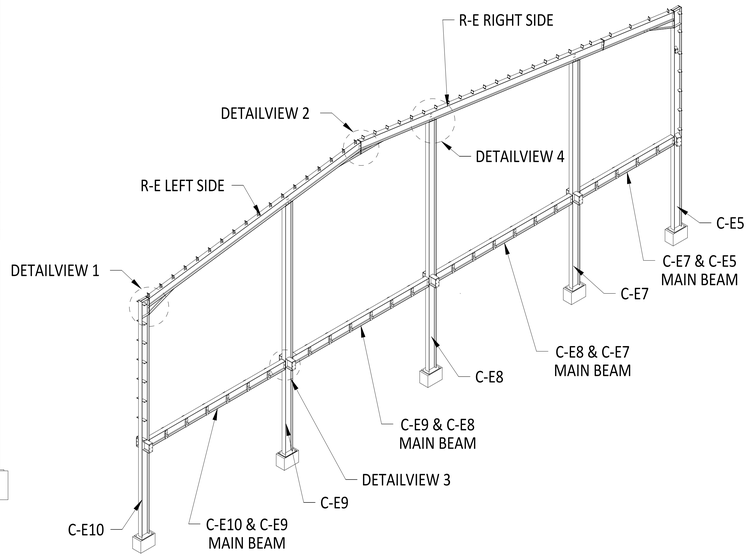

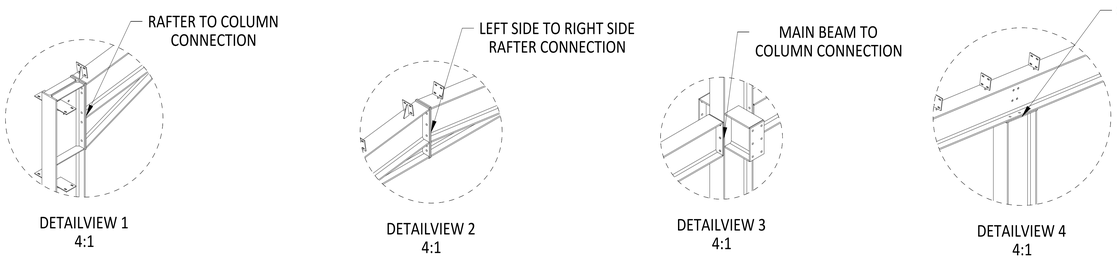

DETAILVIEW 1
4:1

DETAILVIEW 2
4:1

DETAILVIEW 3
4:1

DETAILVIEW 4
4:1

FRAME-E ERECTION DETAILS

ASSEMBLY NO.		TITLE HANGER FRAME E ERECTION DETAILS			
PART NO.			SIZE A0	DWG NO	REV 00
DESIGNER					
APPROVED		SCALE AS SHOWN	RELEASE DATE 21/08/2025	WEIGHT Kg.	QTY.

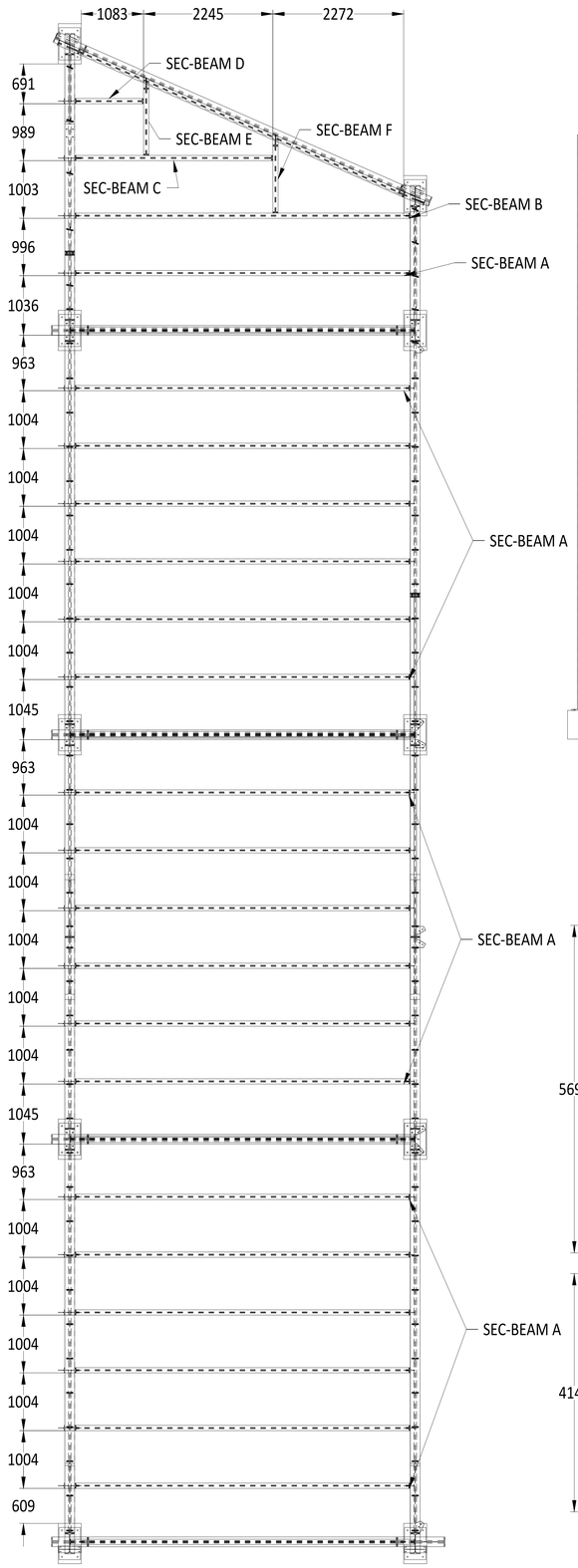

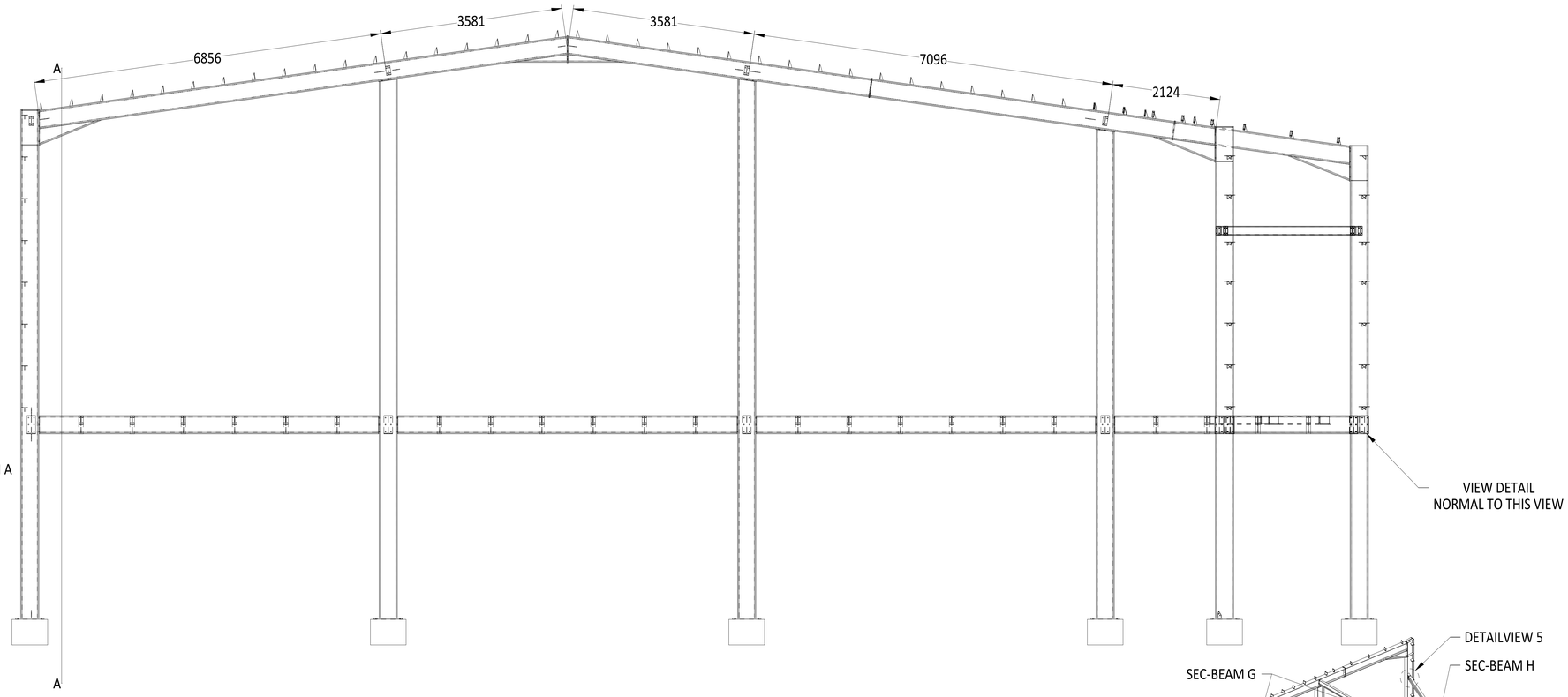

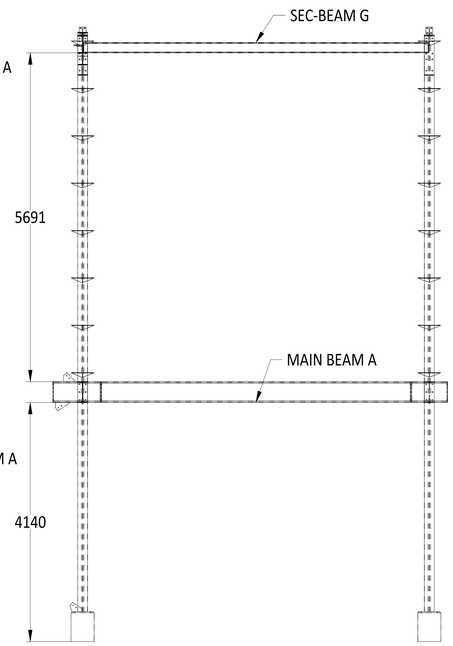

SECTION A-A
SCALE 2:1

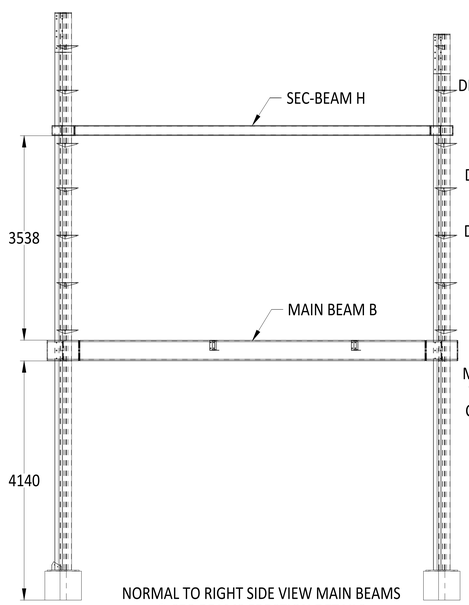

NORMAL TO RIGHT SIDE VIEW MAIN BEAMS
& SEC-BEAMS ERECTION DETAILS
SCALE 2:1

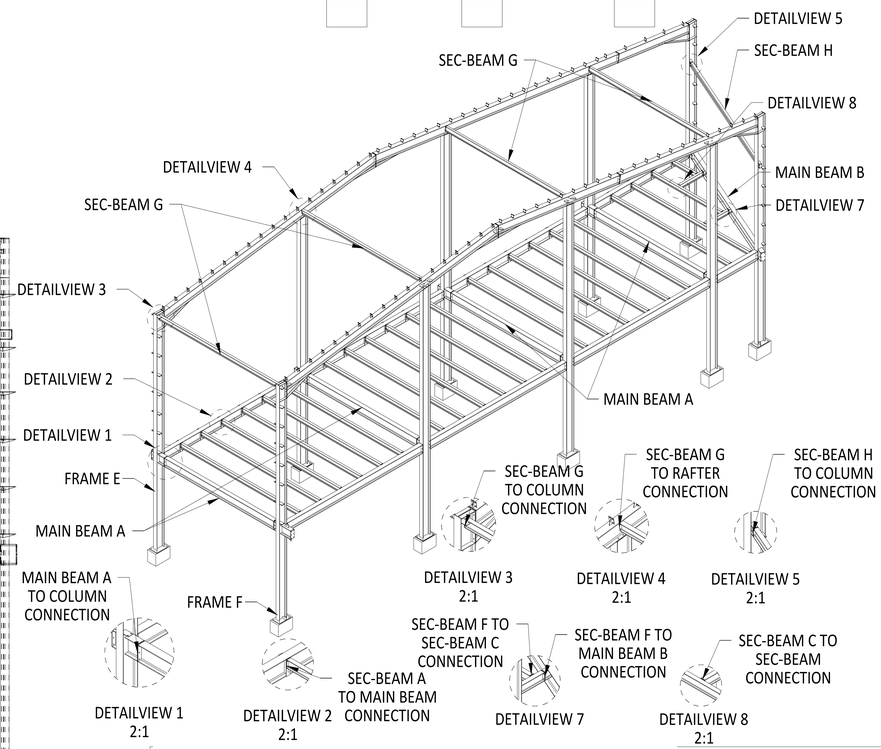

(FRAME-G & FRAME-F) MAIN BEAMS, SECONDARY BEAMS ERECTION DETAILS

ASSEMBLY NO.	TITLE				
PART NO.	HANGER FRAME E & F ERECTION DETAILS				
		SIZE	DWG NO		REV
DESIGNER		A0			00
APPROVED	SCALE AS SHOWN	RELEASE DATE	WEIGHT Kg.		QTY.
		21/08/2025			

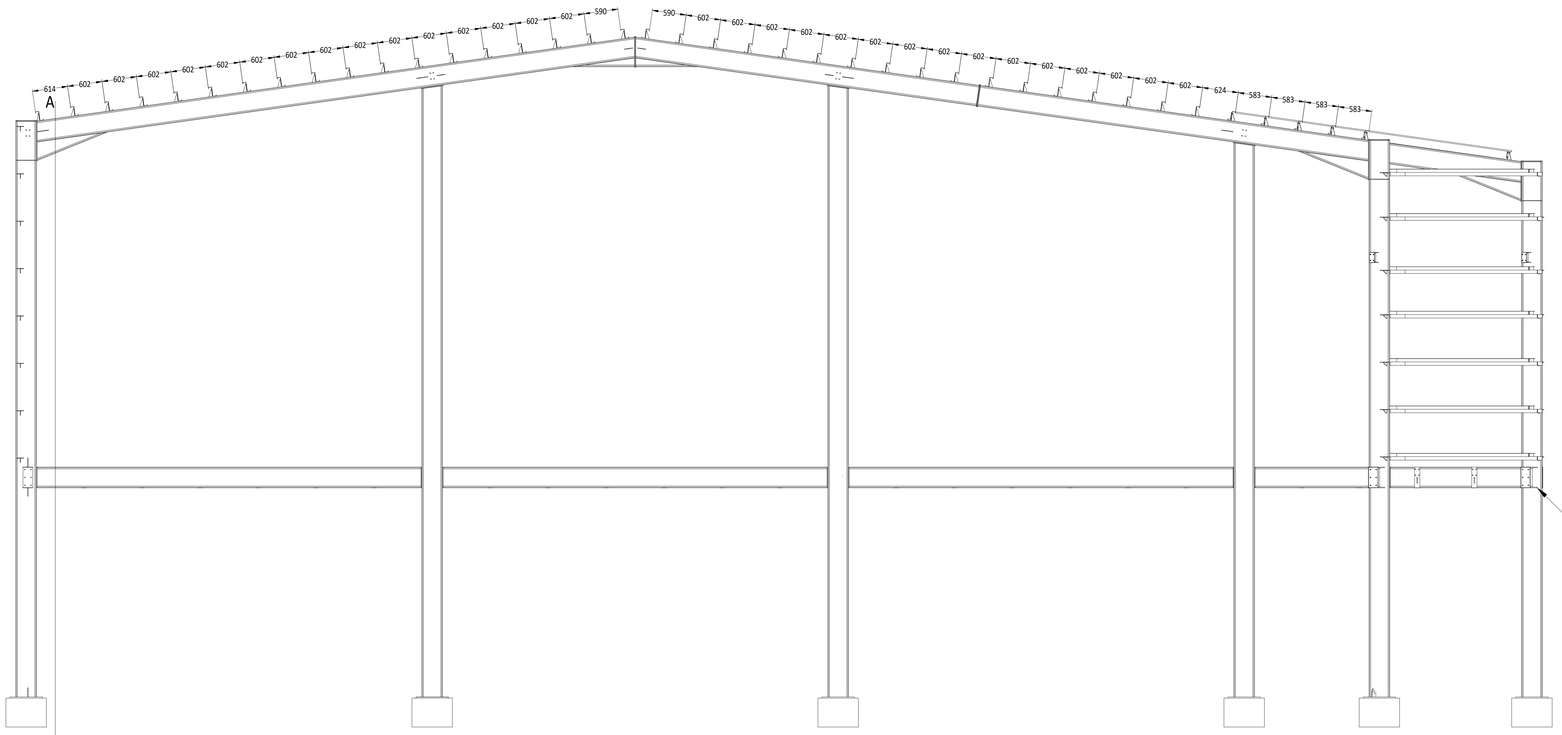

VIEW DETAIL
NORMAL TO THIS VIEW

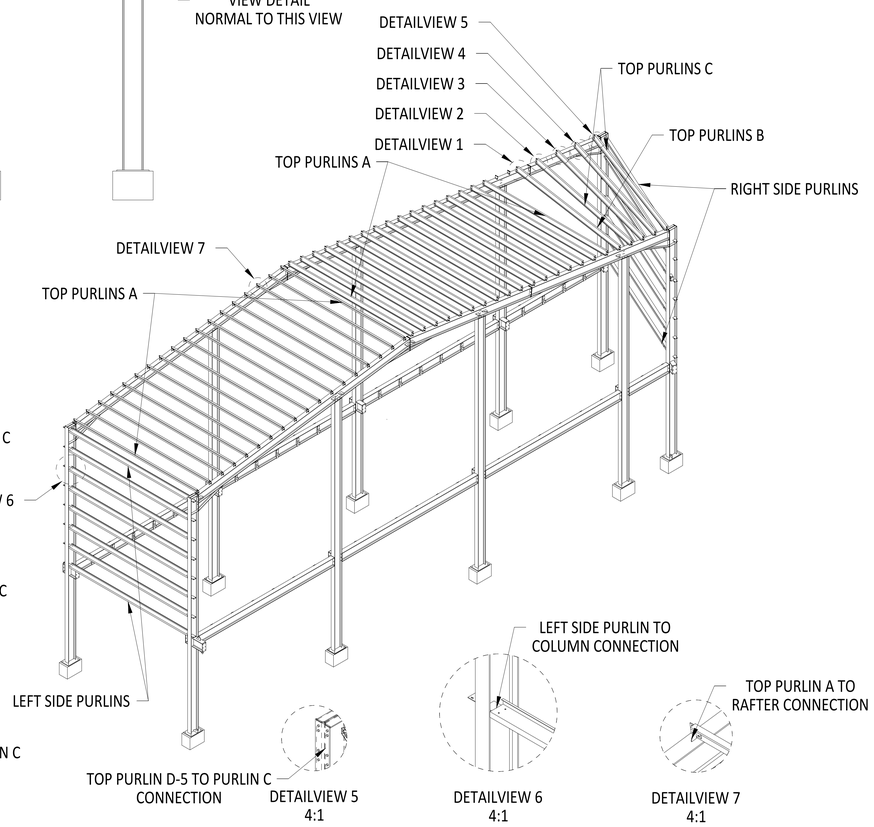

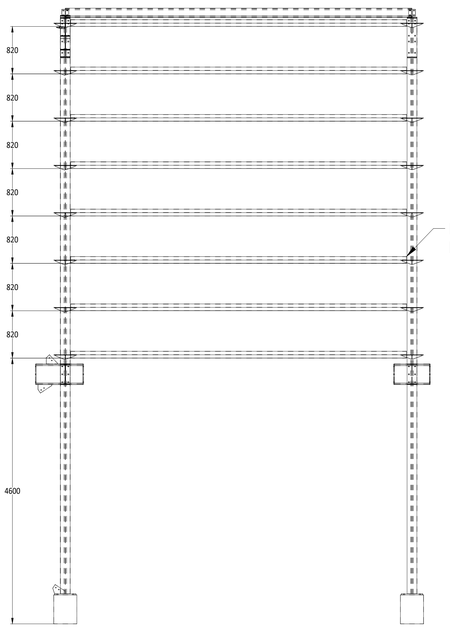

SECTION A-A
SCALE 2:1

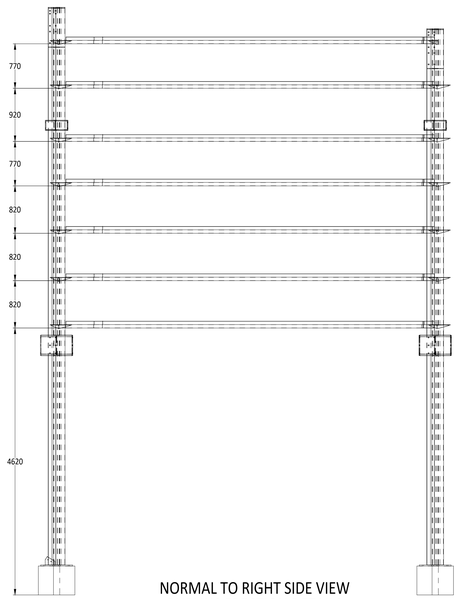

NORMAL TO RIGHT SIDE VIEW
PURLINS ERECTION DETAILS
SCALE 2:1

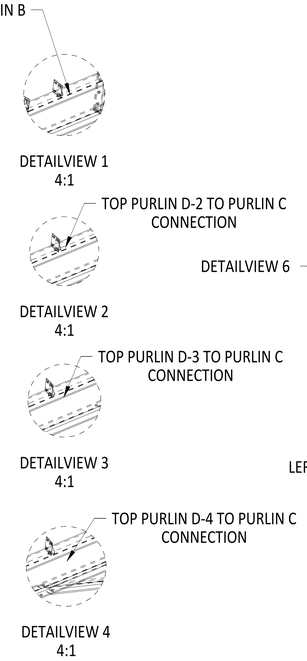

(FRAME-E & FRAME-F) PURLINS ERECTION DETAILS

ASSEMBLY NO.	TITLE HANGER FRAME E & F ERECTION DETAILS				
PART NO.		SIZE A0	DWG NO		REV 00
DESIGNER					
APPROVED		SCALE AS SHOWN	RELEASE DATE 21/08/2025	WEIGHT Kg.	QTY.

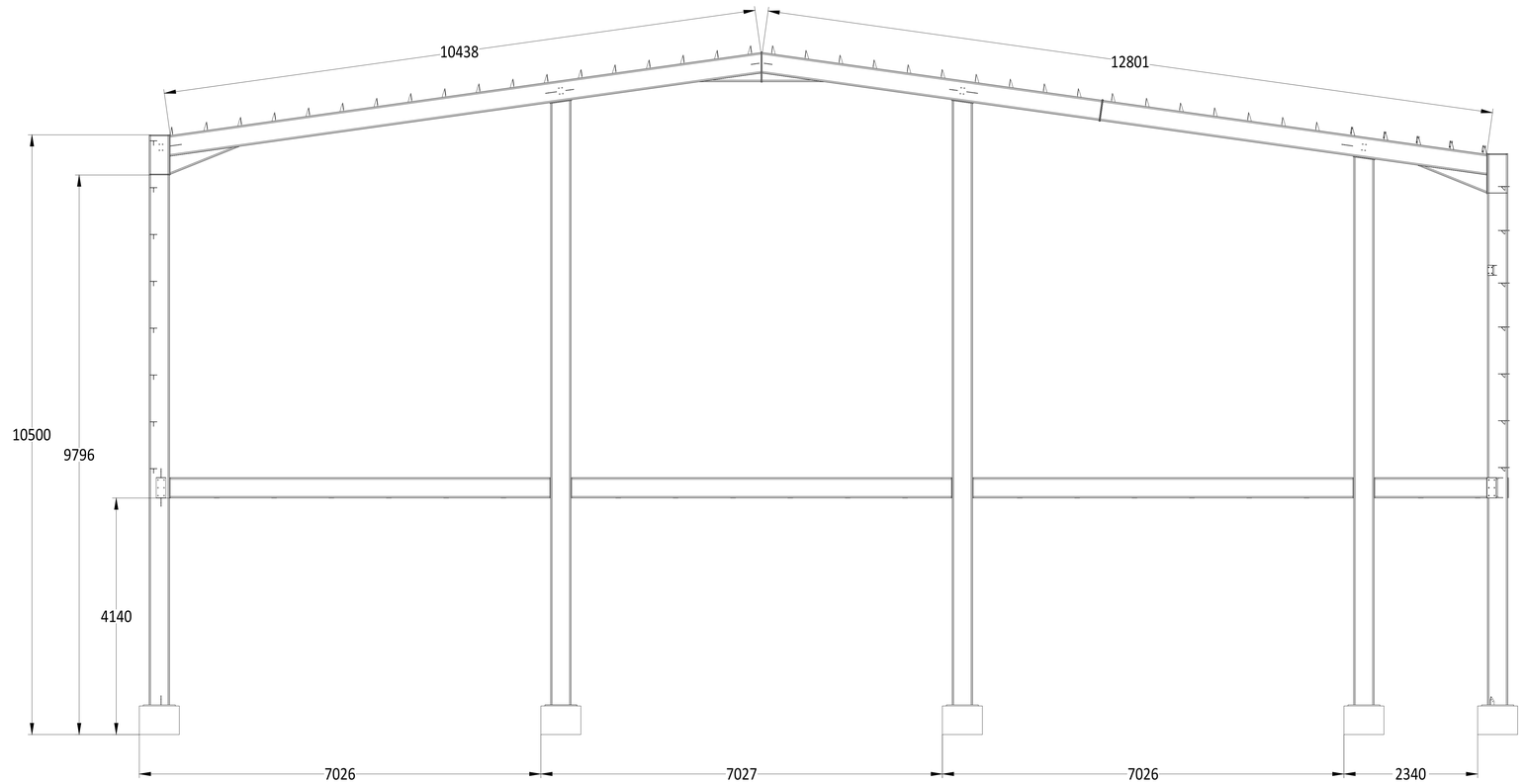

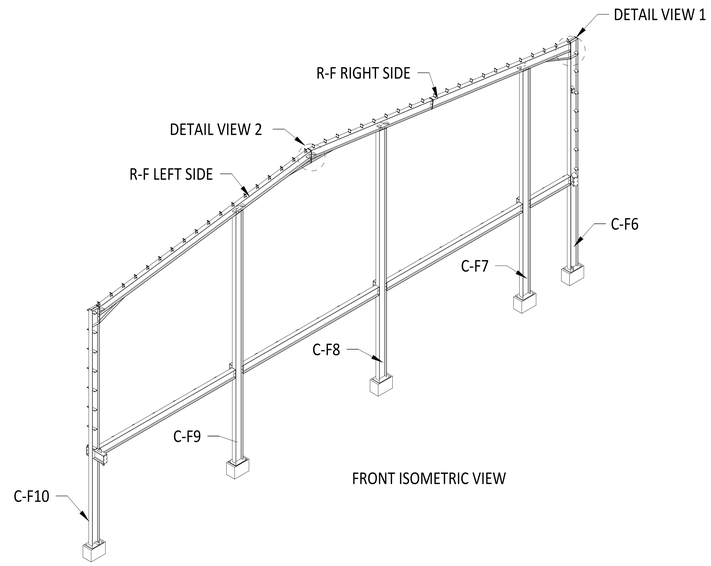

FRONT ISOMETRIC VIEW

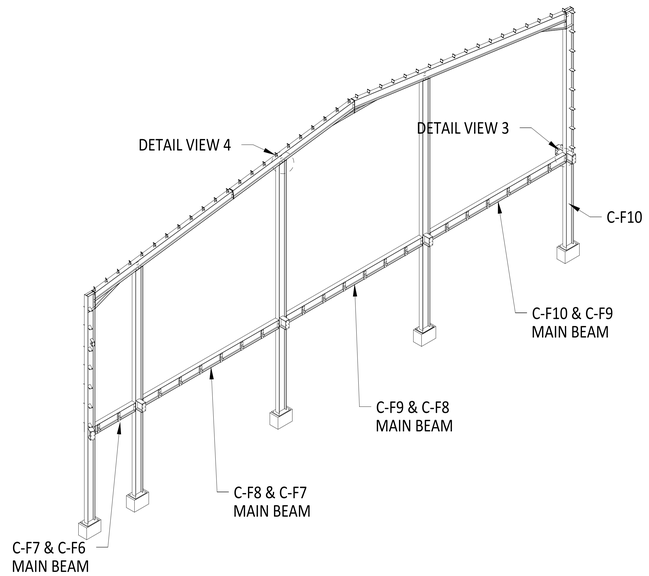

BACK ISOMETRIC VIEW

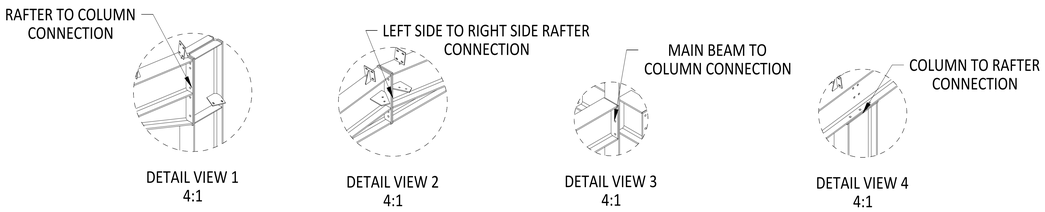

DETAIL VIEW 1
4:1

DETAIL VIEW 2
4:1

DETAIL VIEW 3
4:1

DETAIL VIEW 4
4:1

FRAME-F ERECTION DETAILS

ASSEMBLY NO.	TITLE HANGER FRAME F ERECTION DETAILS				
PART NO.		SIZE A0	DWG NO		REV 00
DESIGNER					
APPROVED		SCALE AS SHOWN	RELEASE DATE 21/08/2025	WEIGHT Kg.	QTY.

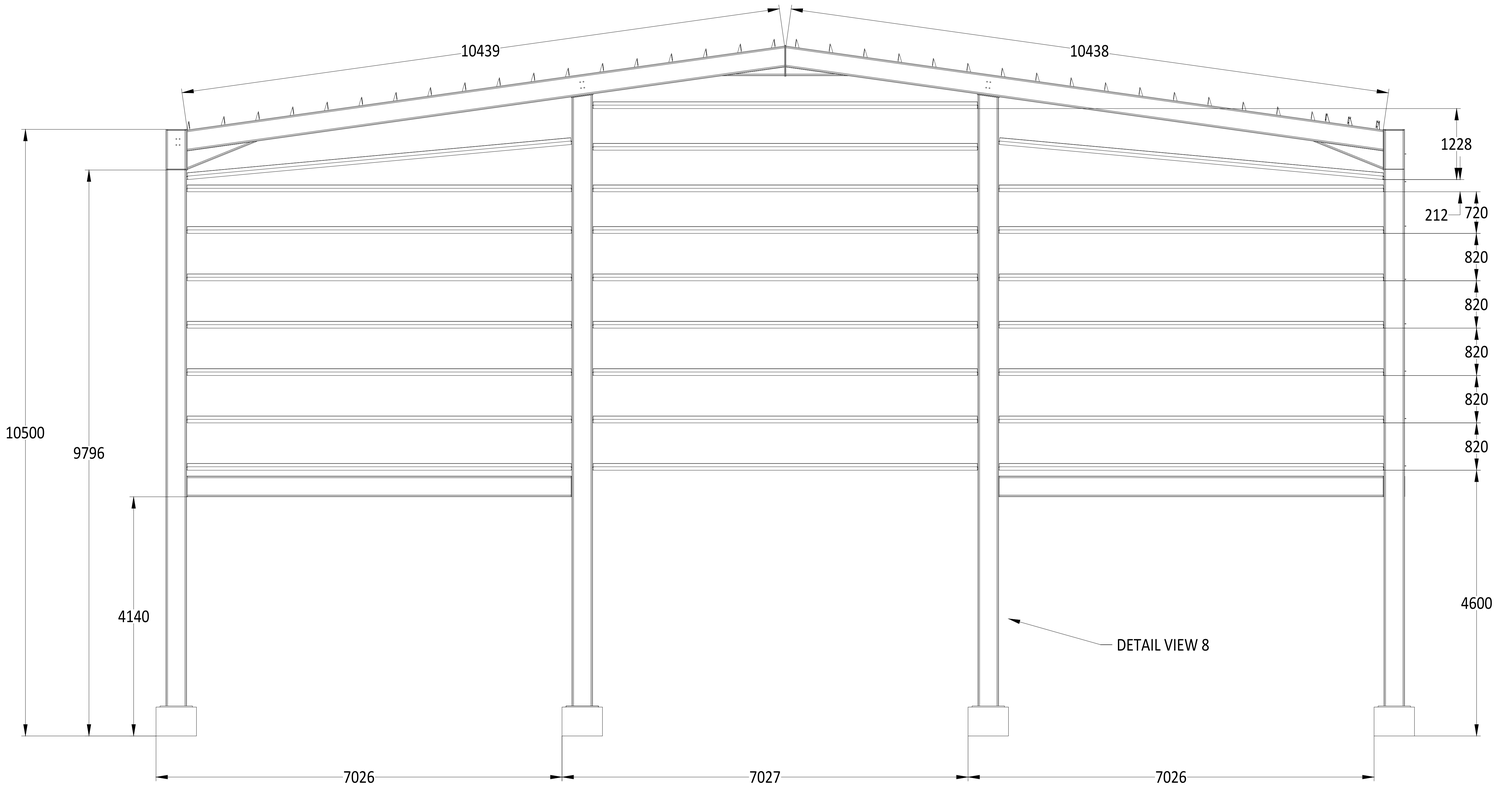

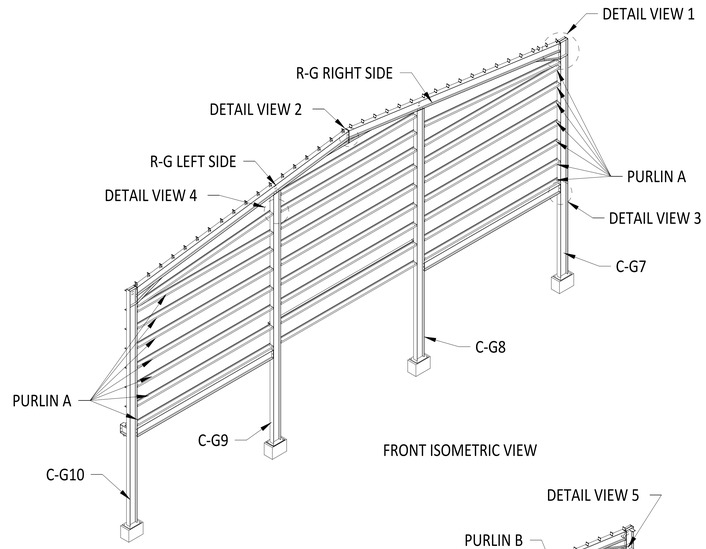

FRONT ISOMETRIC VIEW

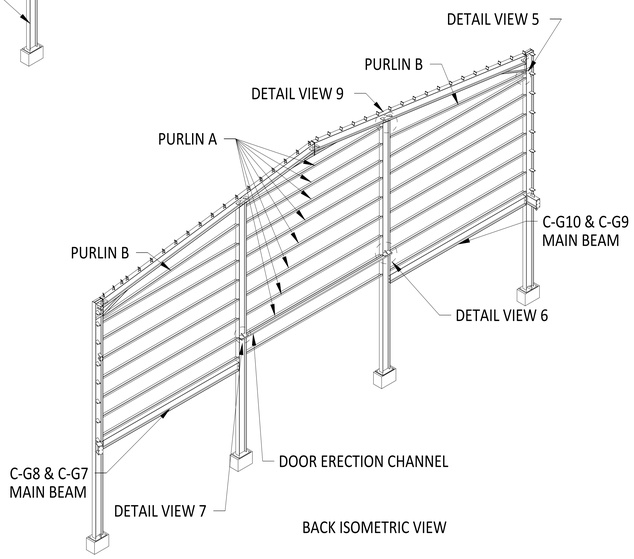

BACK ISOMETRIC VIEW

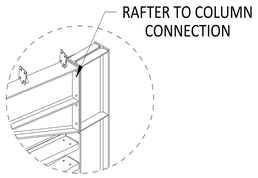

DETAIL VIEW 1
4:1

DETAIL VIEW 2
4:1

DETAIL VIEW 9
4:1

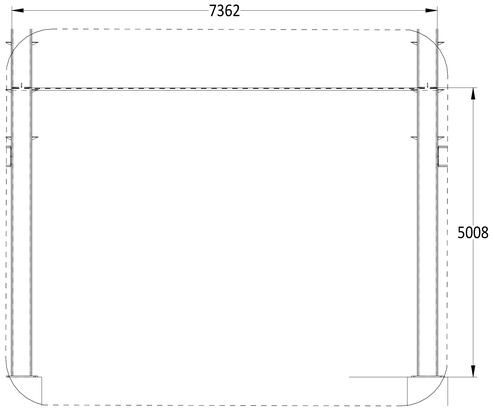

DETAIL VIEW 8
1:1

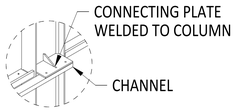

DETAIL VIEW 6
4:1

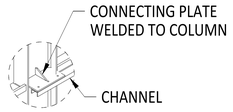

DETAIL VIEW 7
4:1

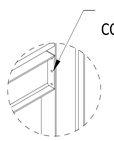

DETAIL VIEW 3
4:1

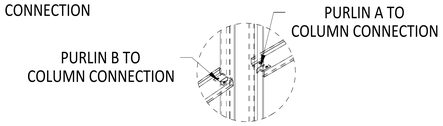

DETAIL VIEW 4
4:1

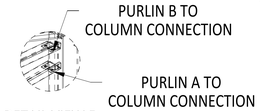

DETAIL VIEW 5
4:1

FRAME-G ERECTION DETAILS

ASSEMBLY NO.		TITLE	HANGER FRAME G ERECTION DETAILS		
PART NO.			SIZE A0	DWG NO	REV 00
DESIGNER					
APPROVED		SCALE AS SHOWN	RELEASE DATE 21/08/2025	WEIGHT Kg.	QTY.

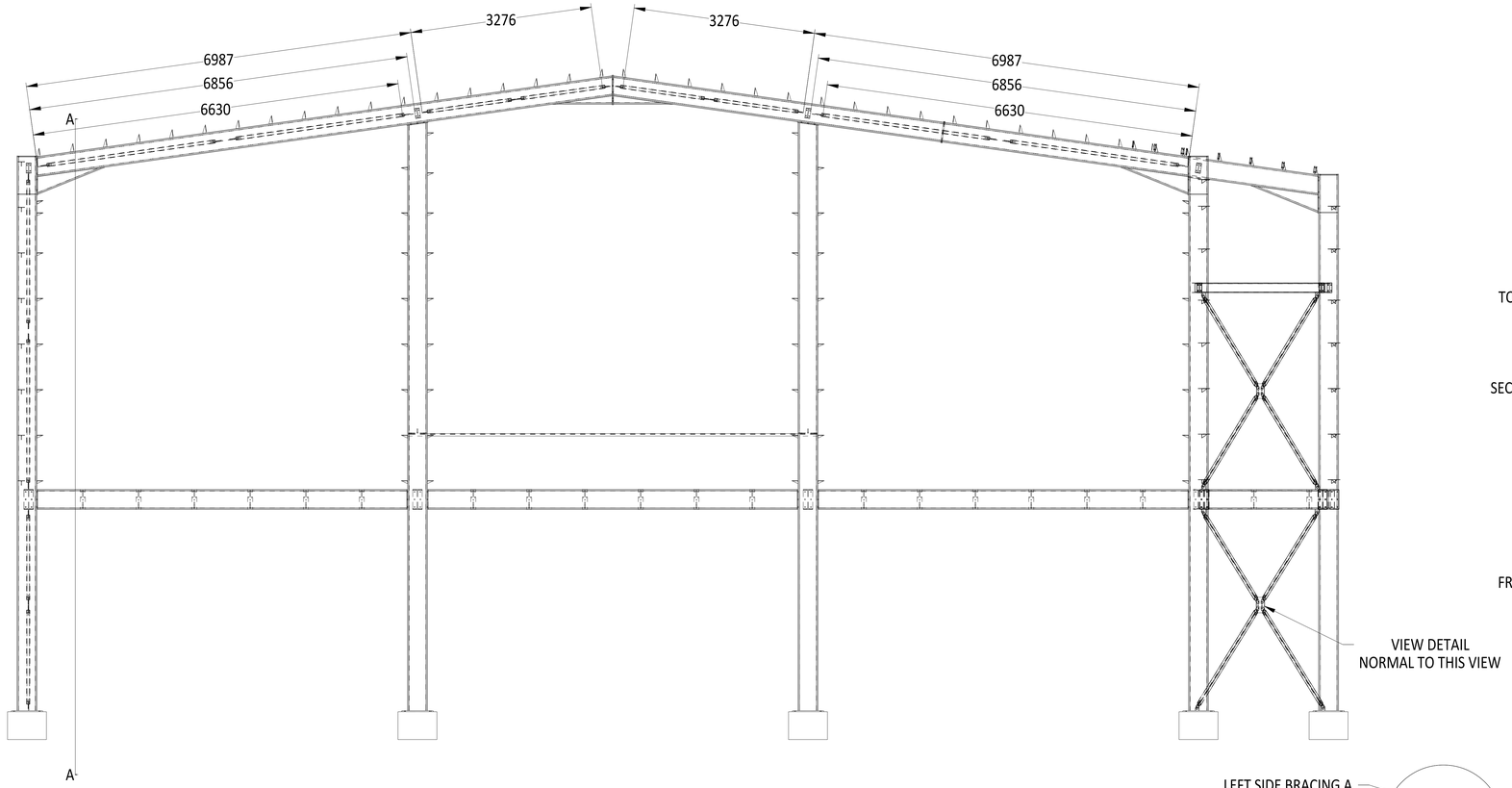

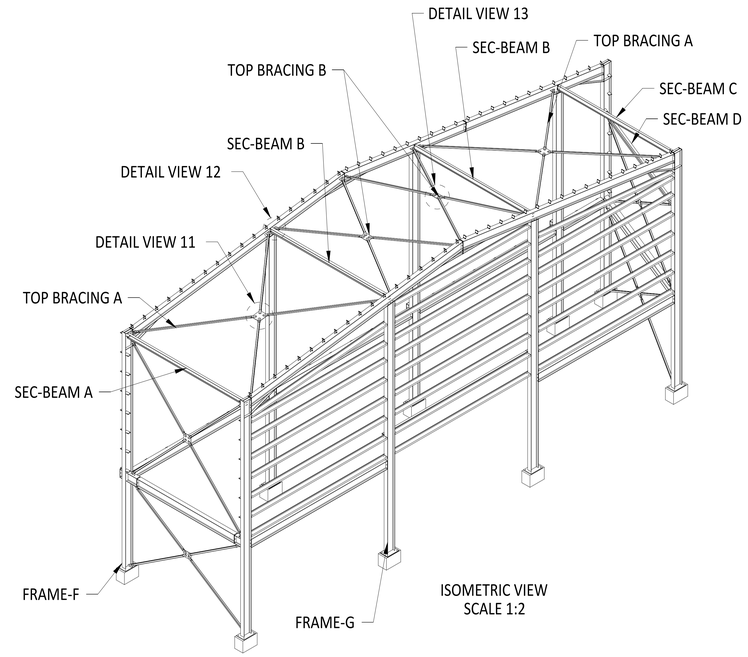

ISOMETRIC VIEW
SCALE 1:2

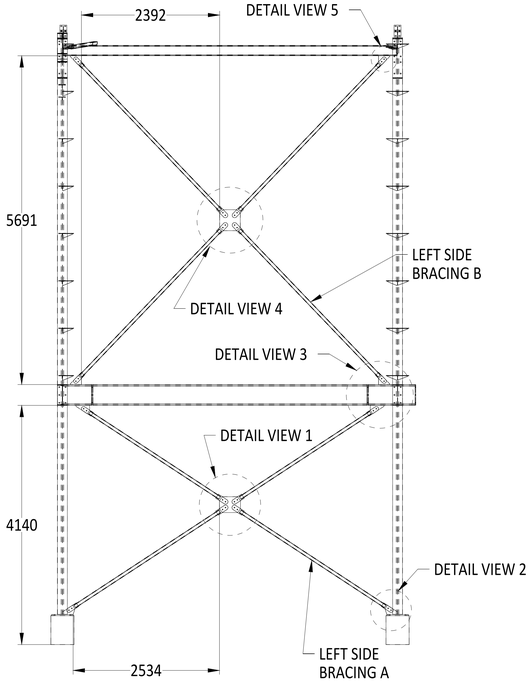

VIEW A-A
SCALE 2:1

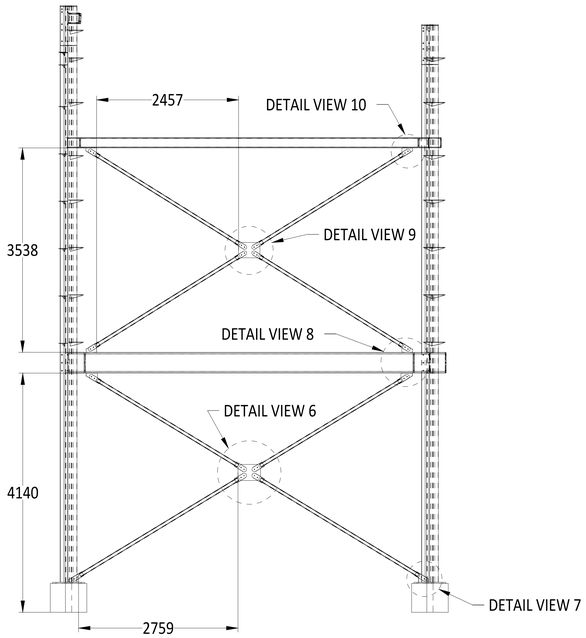

RIGHT SIDE BRACING ERECTION DETAILS
NORMAL VIEW

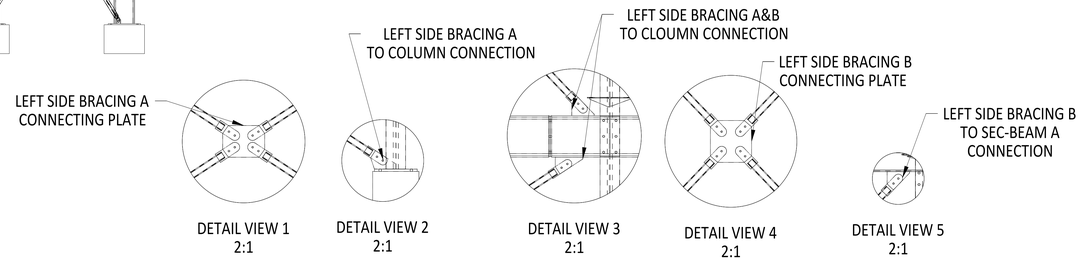

DETAIL VIEW 1
2:1

DETAIL VIEW 2
2:1

DETAIL VIEW 3
2:1

DETAIL VIEW 4
2:1

DETAIL VIEW 5
2:1

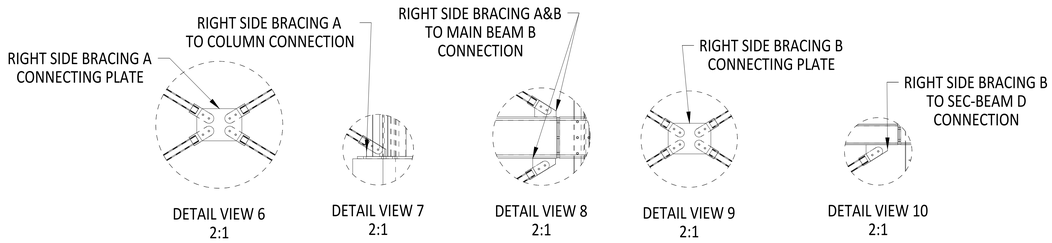

DETAIL VIEW 6
2:1

DETAIL VIEW 7
2:1

DETAIL VIEW 8
2:1

DETAIL VIEW 9
2:1

DETAIL VIEW 10
2:1

DETAIL VIEW 11
2:1

DETAIL VIEW 12
2:1

DETAIL VIEW 13
2:1

(FRAME-G & FRAME-F) MAIN BEAMS, SECONDARY BEAMS & BRACING ERECTION DETAILS

ASSEMBLY NO.	TITLE HANGER FRAME F & G ERECTION DETAILS			
PART NO.		SIZE A0	DWG NO	REV 00
DESIGNER		RELEASE DATE 21/08/2025	WEIGHT Kg.	
APPROVED		SCALE AS SHOWN		QTY.

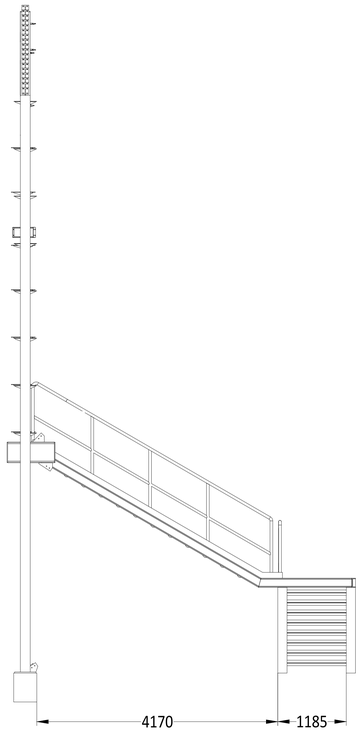

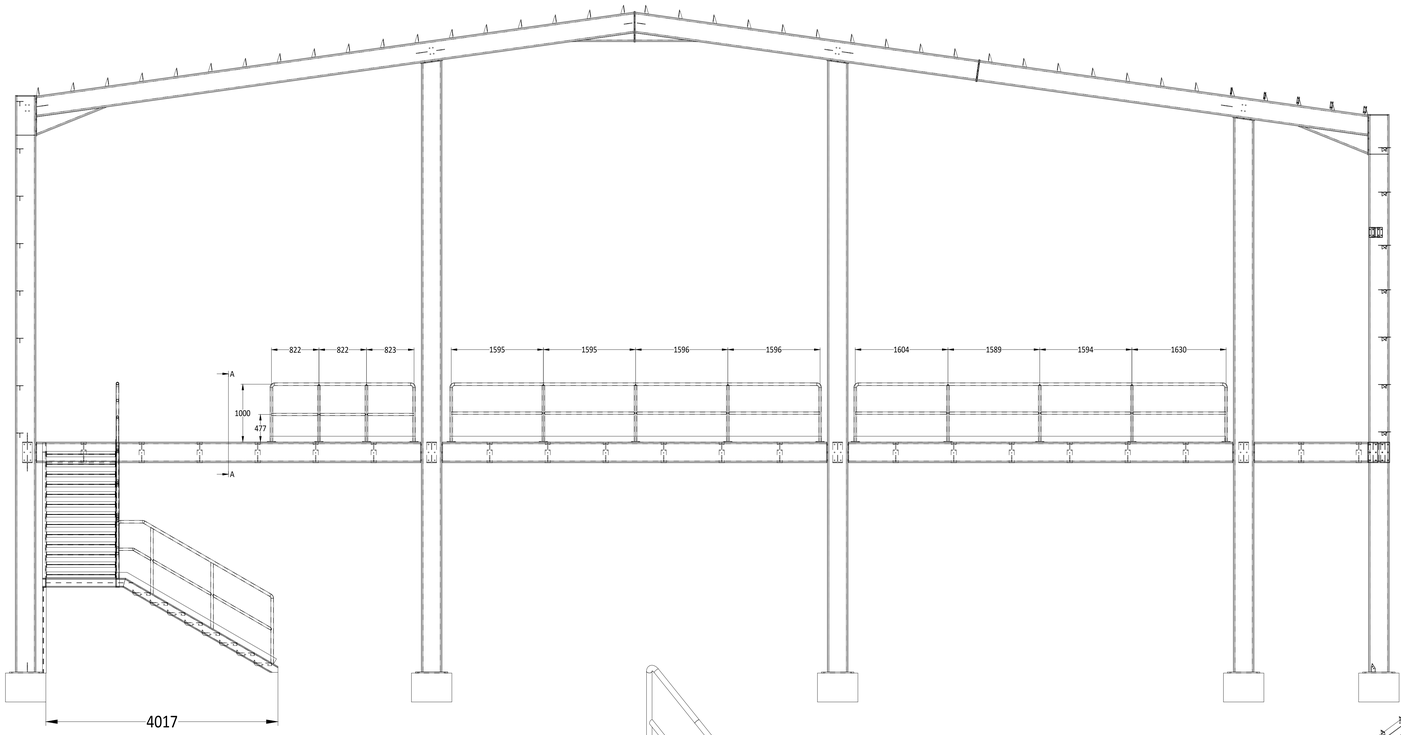

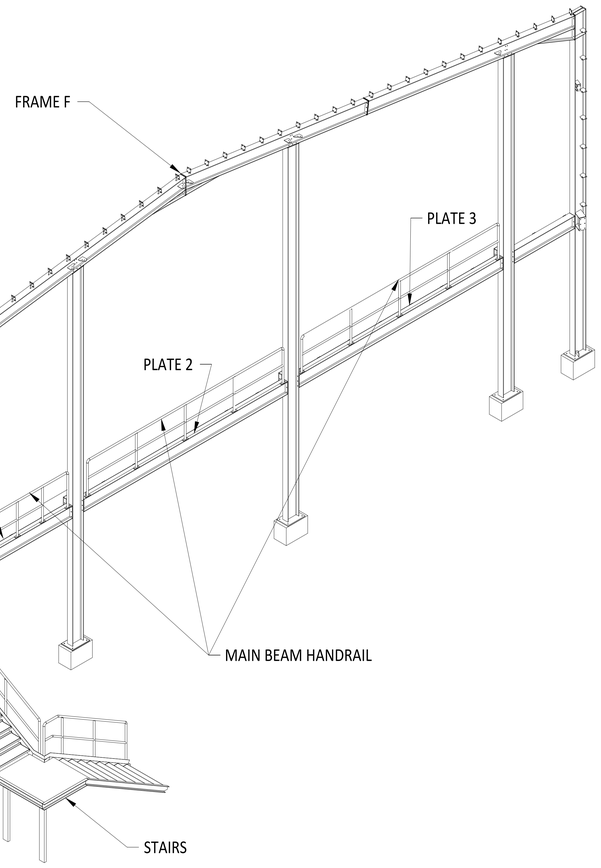

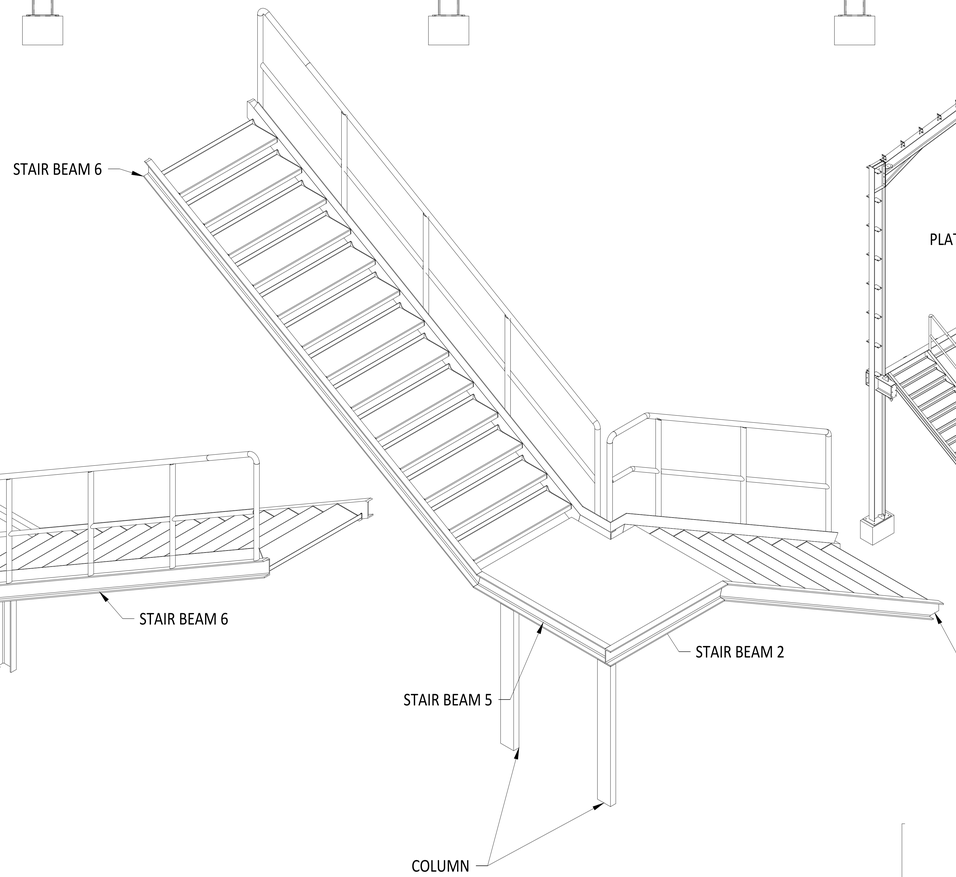

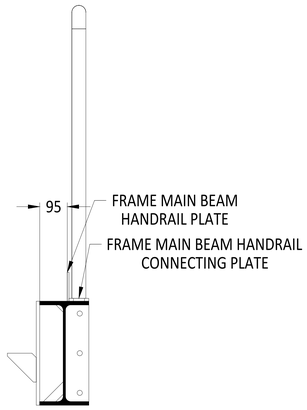

HANDRAIL LOCATION ON FRAME F
MAIN BEAM SECTION A-A
SCALE 10:1

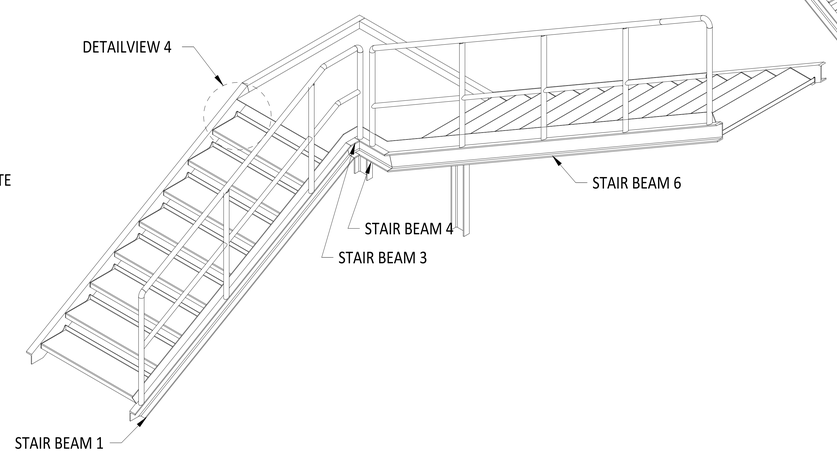

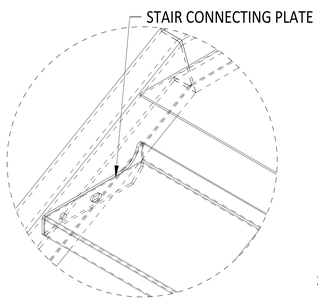

STAIR CONNECTING PLATE
DETAILVIEW 4
4:1

MAIN BEAM HANDRAILS & STAIR ERECTION DETAILS

ASSEMBLY NO.		TITLE	STAIRS & HANDRAIL ERECTION DETAILS		
PART NO.			SIZE	DWG NO	REV
DESIGNER			A0		00
APPROVED		SCALE AS SHOWN	RELEASE DATE 21/08/2025	WEIGHT Kg.	QTY.

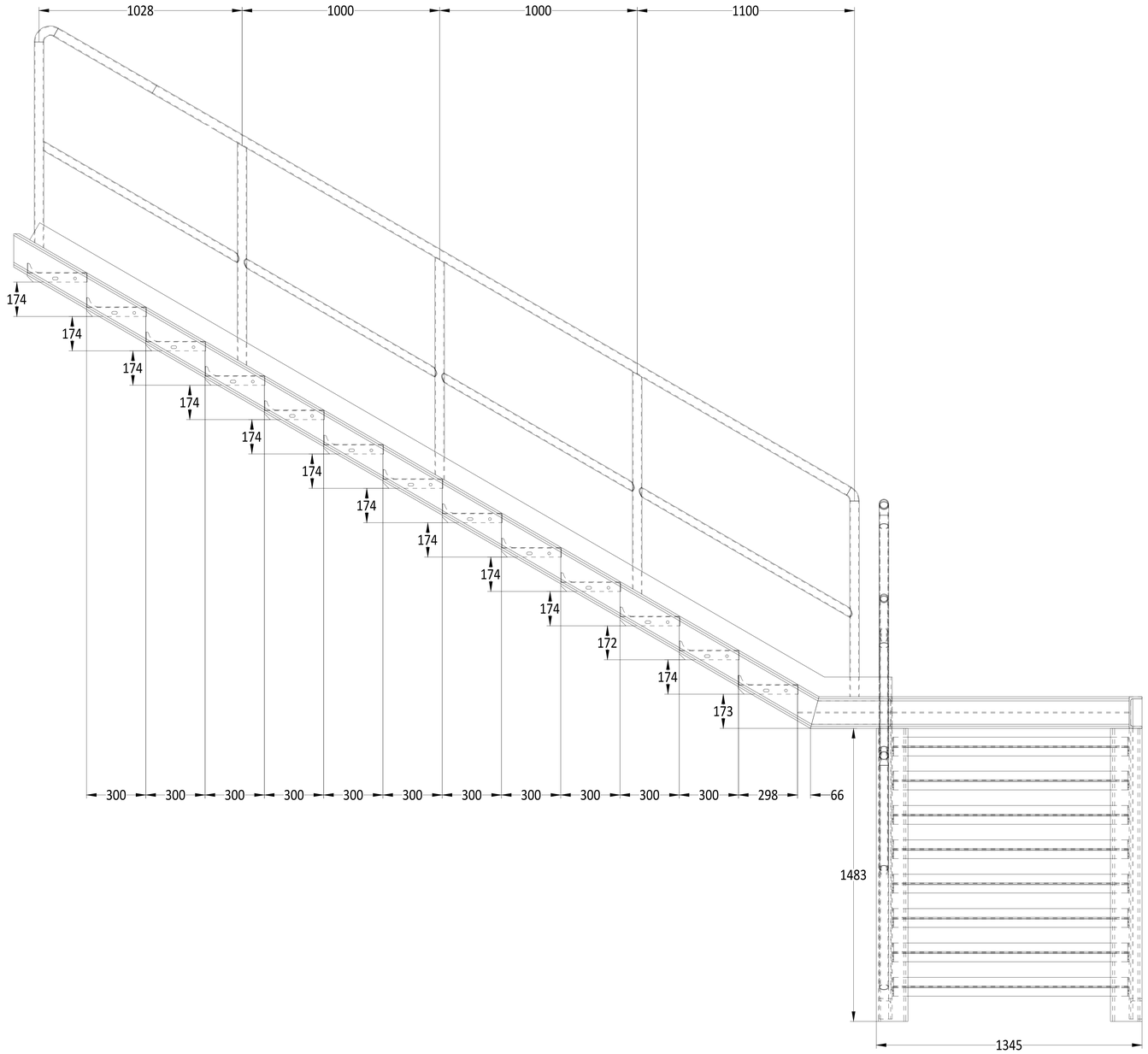

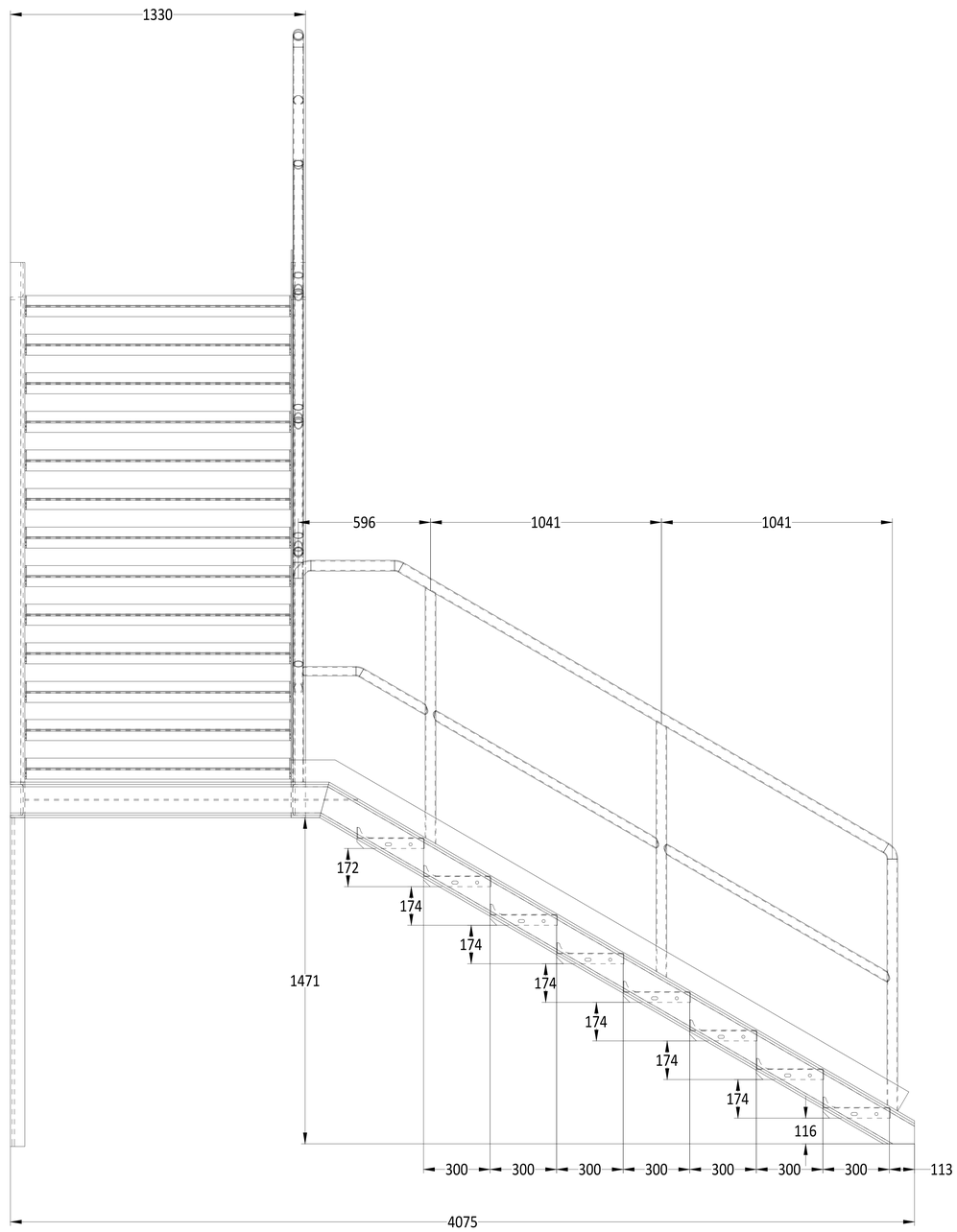

STAIRS ERECTION DEAILS

ASSEMBLY NO.	TITLE STAIRS ERECTION DETAILS				
PART NO.		SIZE A0	DWG NO		REV 00
DESIGNER					
APPROVED		SCALE AS SHOWN	RELEASE DATE 21/08/2025	WEIGHT Kg.	QTY.

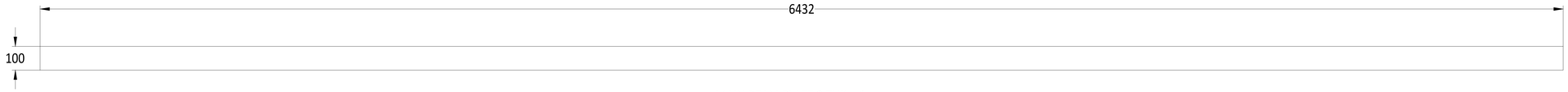

MAIN BEAM PLATE 3 THK = 6mm
FABRICATION DETAILS QTY = 1
SCALE 8:1

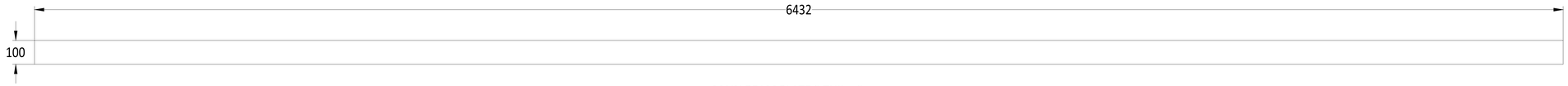

MAIN BEAM PLATE 2 THK = 6mm
FABRICATION DETAILS QTY = 1
SCALE 8:1

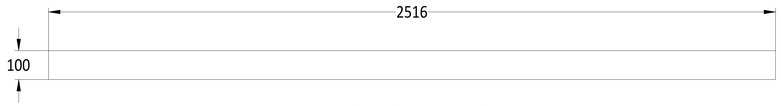

MAIN BEAM PLATE 1 THK = 6mm
FABRICATION DETAILS QTY = 1
SCALE 8:1

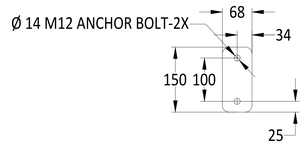

MAIN BEAM HANDRAIL CONNECTING PLATE THK = 10mm
FABRICATION DETAILS QTY = 14
SCALE 15:1

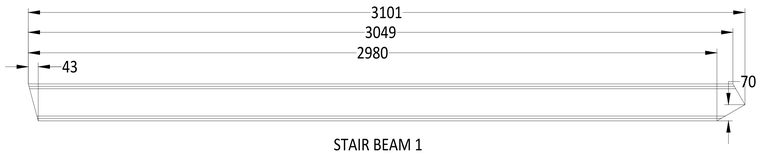

STAIR BEAM 1
FABRICATION DETAILS QTY = 2
SCALE 8:1

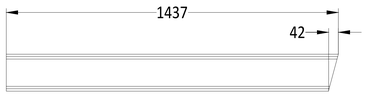

STAIR BEAM 2
FABRICATION DETAILS QTY = 1
SCALE 8:1

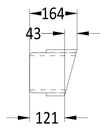

STAIR BEAM 3
FABRICATION DETAILS QTY = 1
SCALE 10:1

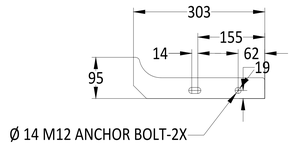

STAIR CONNECTING PLATE
FABRICATION DETAILS QTY = 42
SCALE 15:1

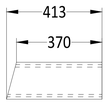

STAIR BEAM 4
FABRICATION DETAILS QTY = 1
SCALE 8:1

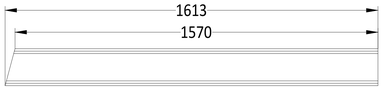

STAIR BEAM 5
FABRICATION DETAILS QTY = 1
SCALE 8:1

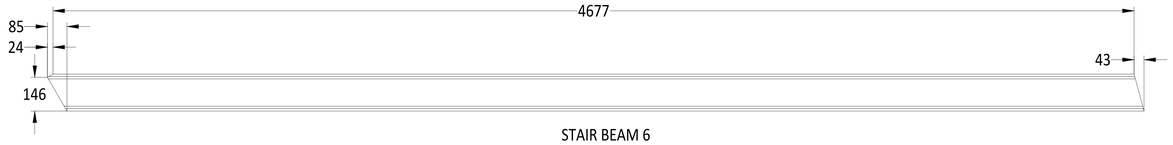

STAIR BEAM 6
FABRICATION DETAILS QTY = 2
SCALE 8:1

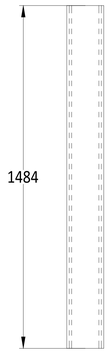

STAIR COLUMN
FABRICATION DETAILS QTY = 2
SCALE 8:1

STAIRS & HANDRAIL FABRICATION DETAILS

ASSEMBLY NO.	TITLE STAIRS & HANDRAIL ON FRAME FABRICATION DETAILS			
PART NO.		SIZE A0	DWG NO	REV 00
DESIGNER				
APPROVED		SCALE AS SHOWN	RELEASE DATE 21/08/2025	WEIGHT Kg. / QTY.

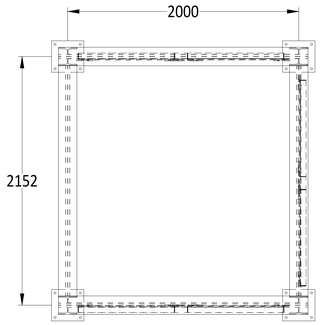

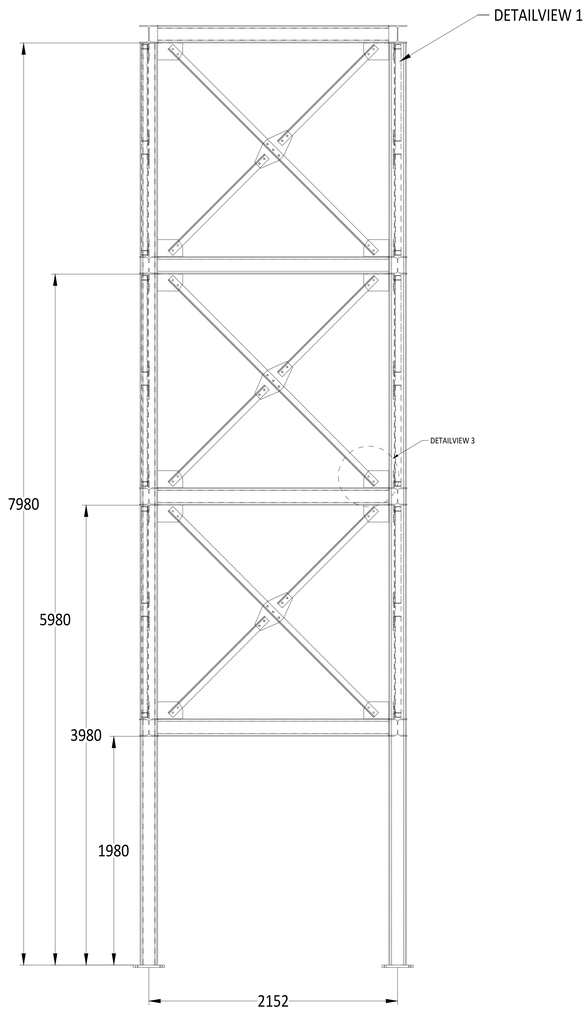

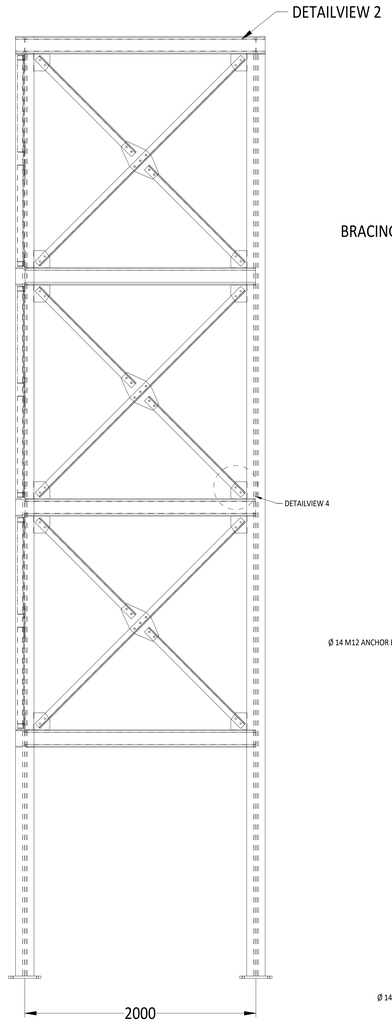

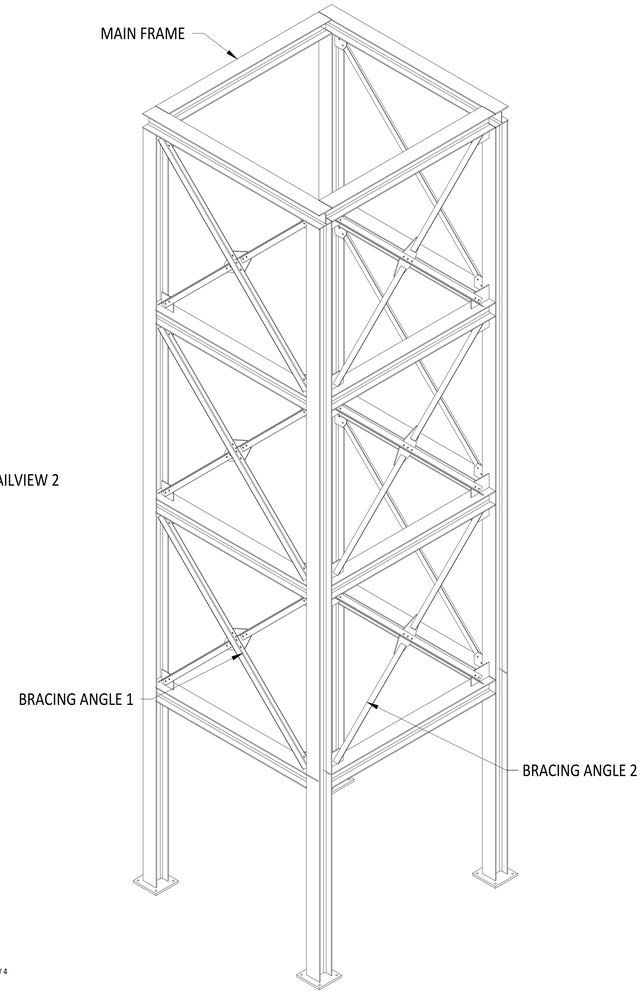

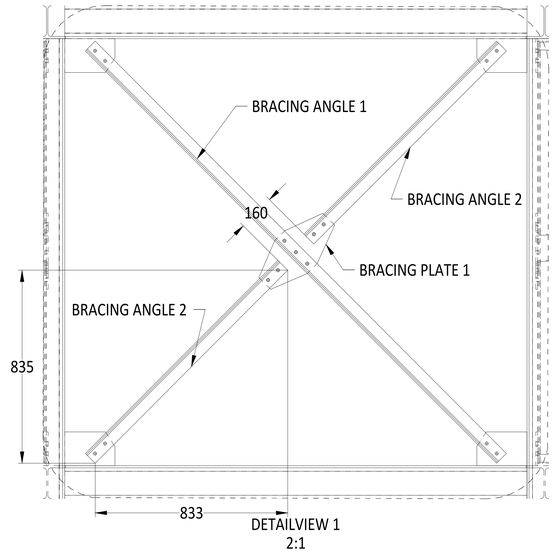

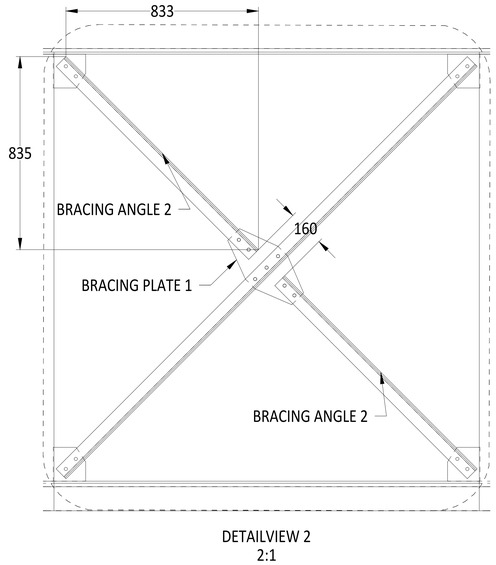

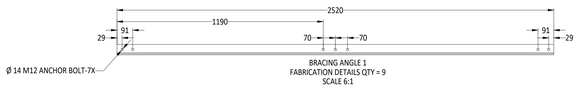

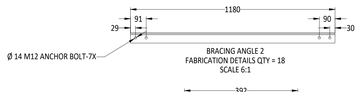

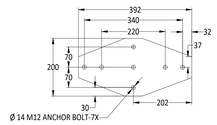

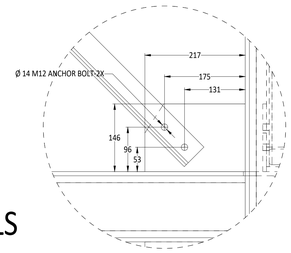

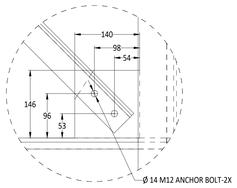

LIFTING FRAME ERECTION DETAILS & FABRICATION DETAILS

ASSEMBLY NO.	TITLE LIFTING FRAME ERECTION & FABRICATION DETAILS				
PART NO.		SIZE A0	DWG NO		REV 00
DESIGNER					
APPROVED		SCALE AS SHOWN	RELEASE DATE 21/08/2025	WEIGHT Kg.	QTY.

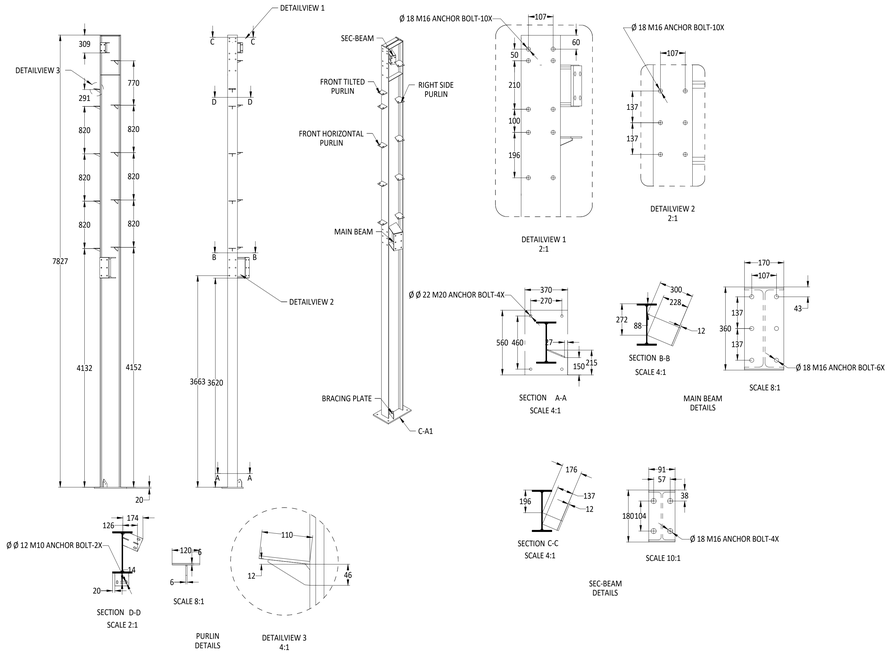

COLUMN C-A1 FABRICATION DETAILS

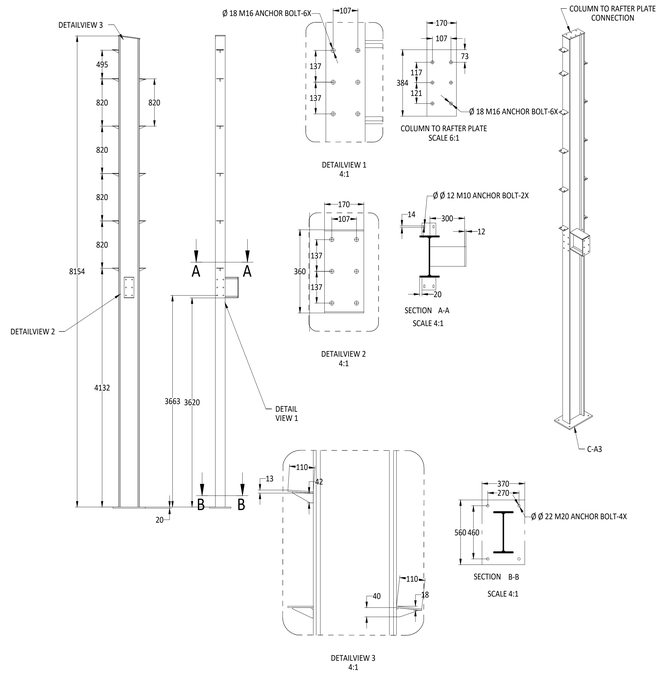

COLUMN C-A3 FABRICATION DETAILS

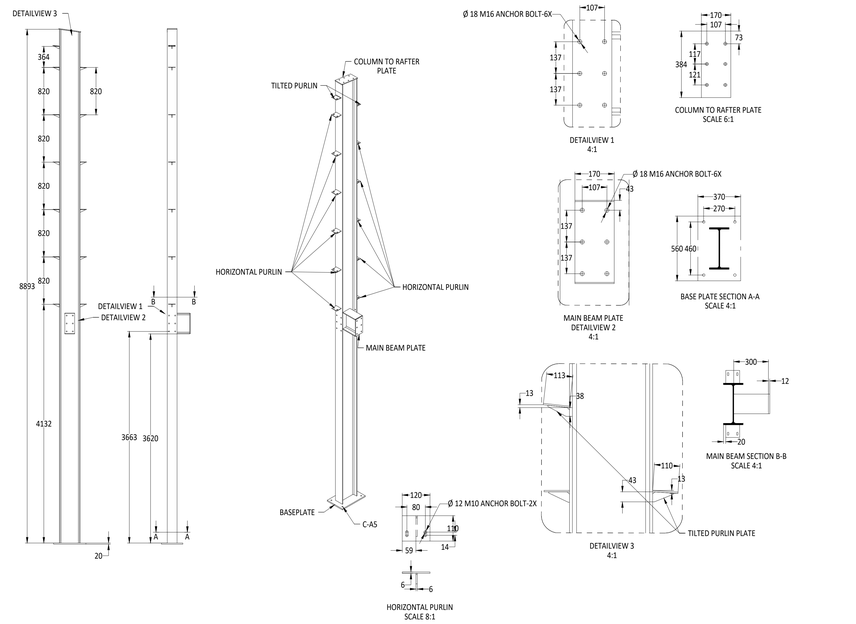

COLUMN C-A5 FABRICATION DETAILS

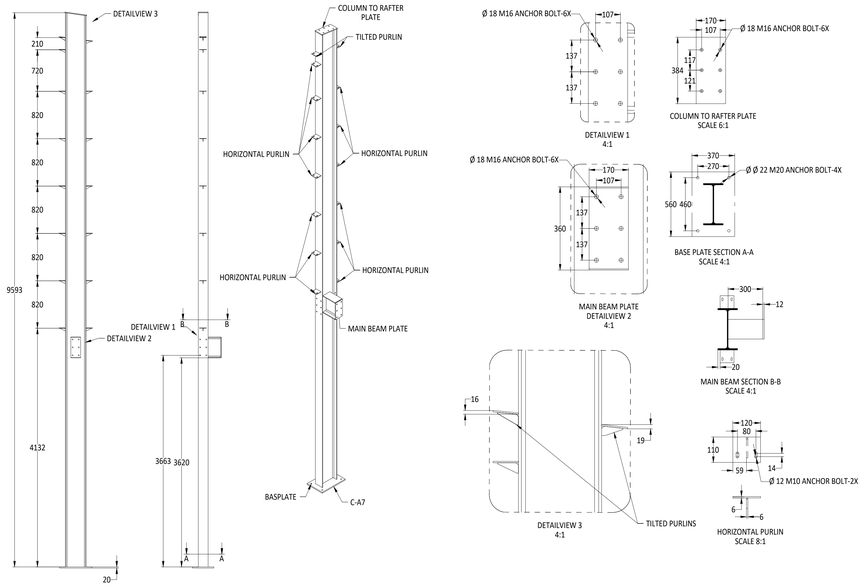

COLUMN C-A7 FABRICATION DETAILS

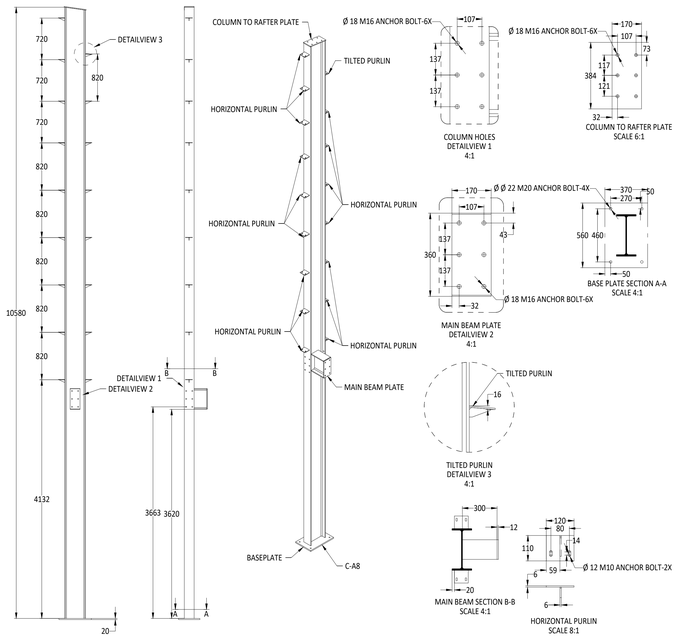

COLUMN C-A8 & C-A9 FABRICATION DETAILS

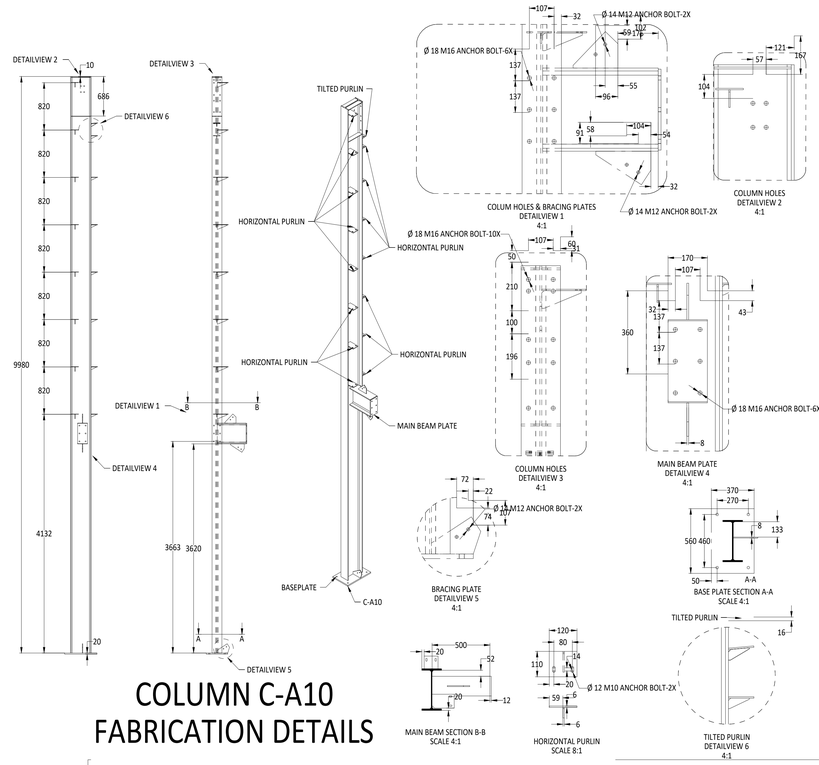

COLUMN C-A10 FABRICATION DETAILS

FRAME-A FABRICATION DETAILS

ASSEMBLY NO.	TITLE HANGER FRAME-A FABRICATION DETAILS			
PART NO.		SIZE A0	DWG NO	REV 00
DESIGNER				
APPROVED	SCALE AS SHOWN	RELEASE DATE 21/08/2025	WEIGHT Kg.	QTY.

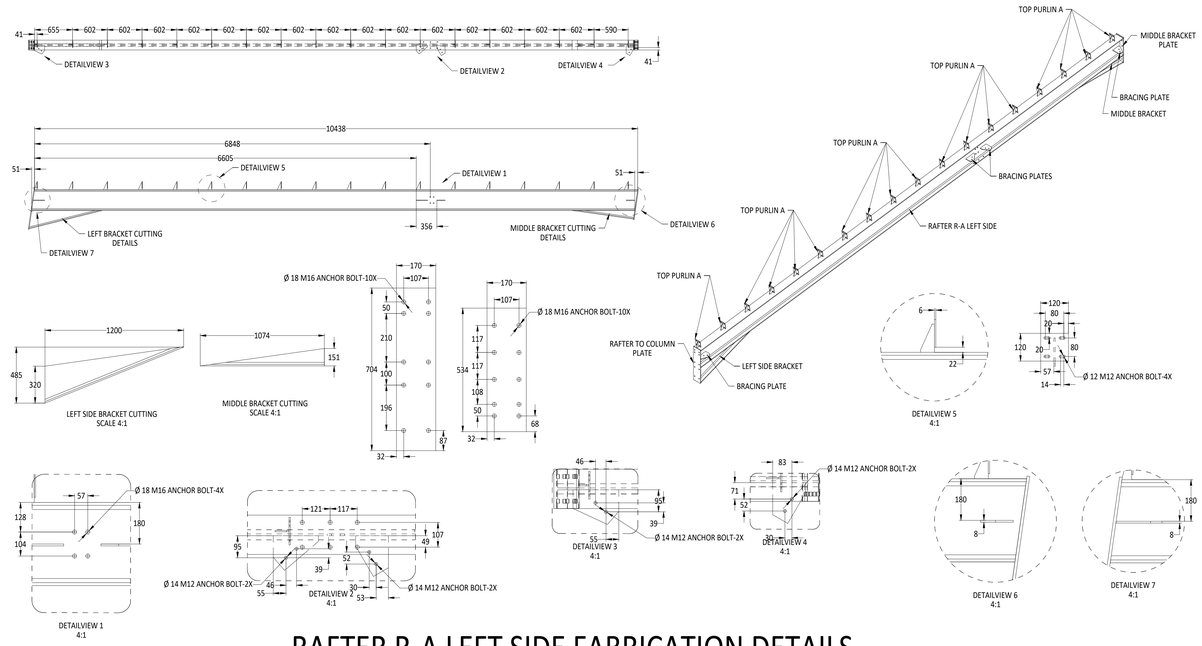

RAFTER R-A LEFT SIDE FABRICATION DETAILS

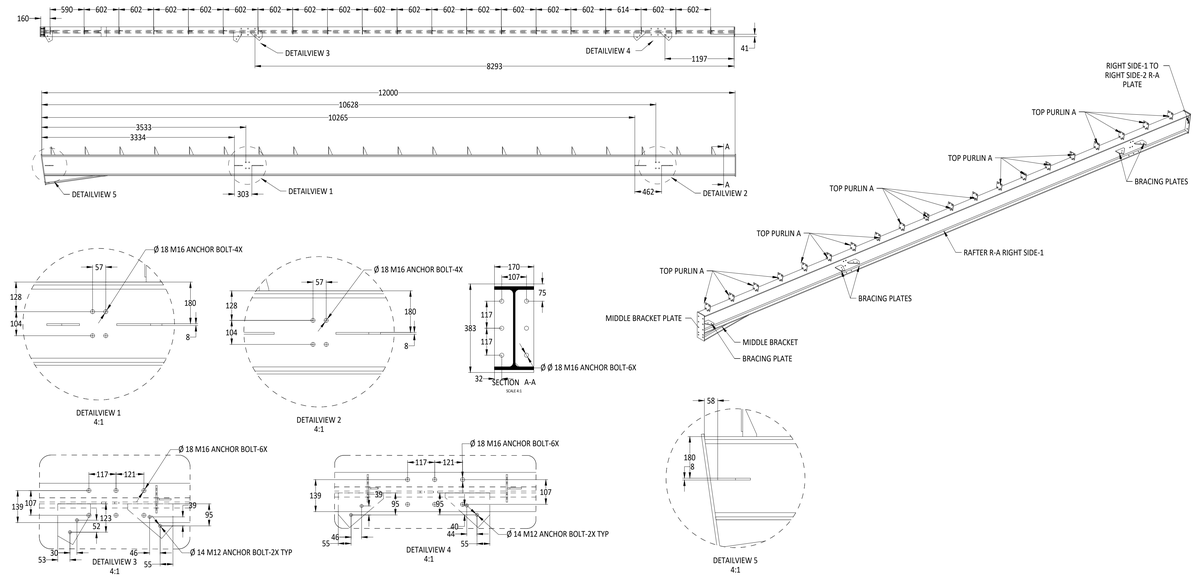

RAFTER R-A RIGHT SIDE-1 FABRICATION DETAILS

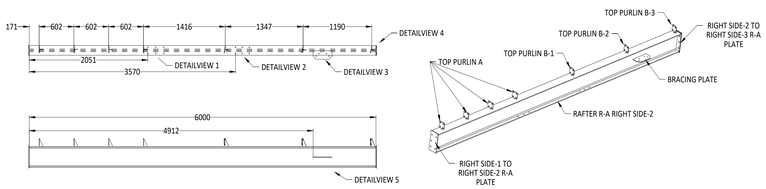

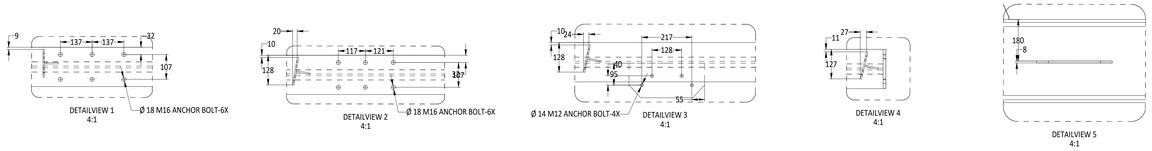

RAFTER R-A RIGHT SIDE-2 FABRICATION DETAILS

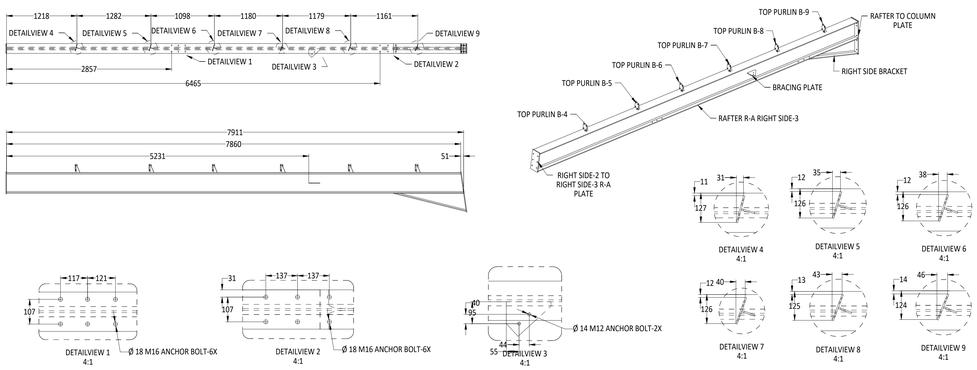

RAFTER R-A RIGHT SIDE-3 FABRICATION DETAILS

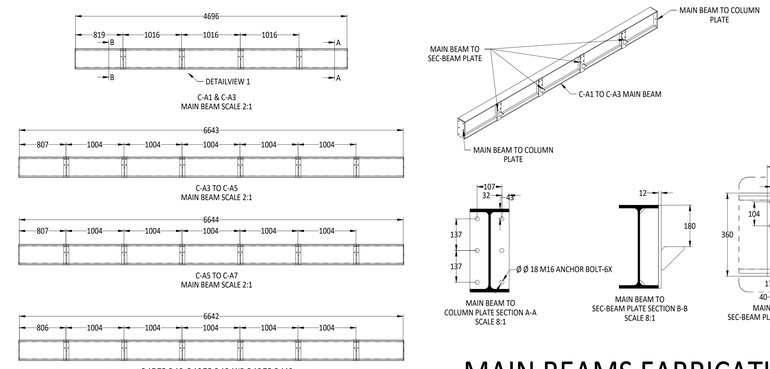

MAIN BEAMS FABRICATION DETAILS

FRONT PURLINS FABRICATION DETAILS

ASSEMBLY NO.	TITLE	HANGER FRAME-A FABRICATION DETAILS	
PART NO.	SIZE A0	DWG NO	REV 00
DESIGNER			
APPROVED	SCALE AS SHOWN	RELEASE DATE 21/08/2025	WEIGHT Kg. / QTY.

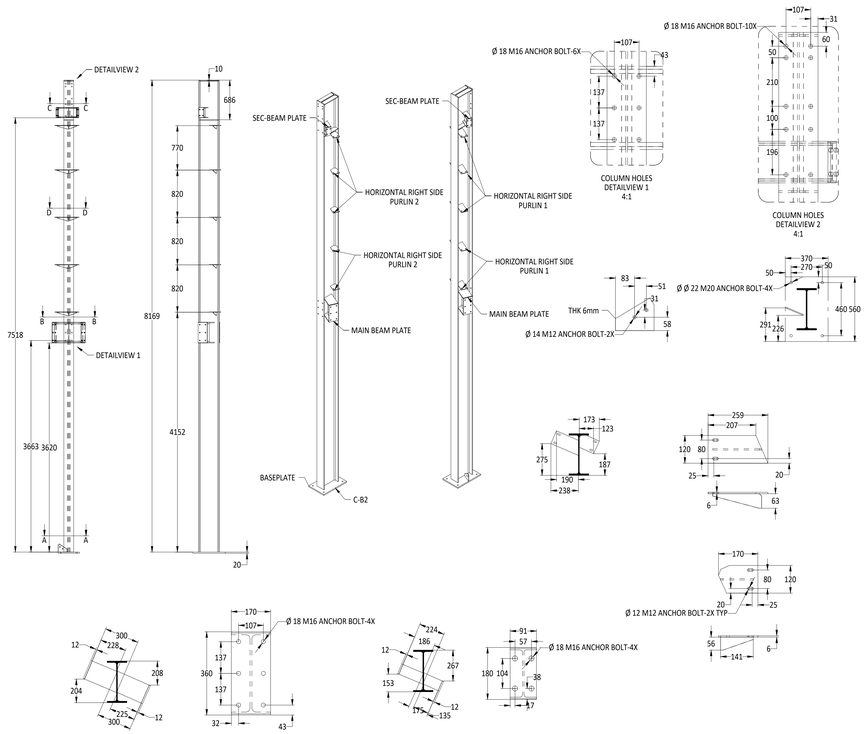

COLUMN C-B2 FABRICATION DETAILS

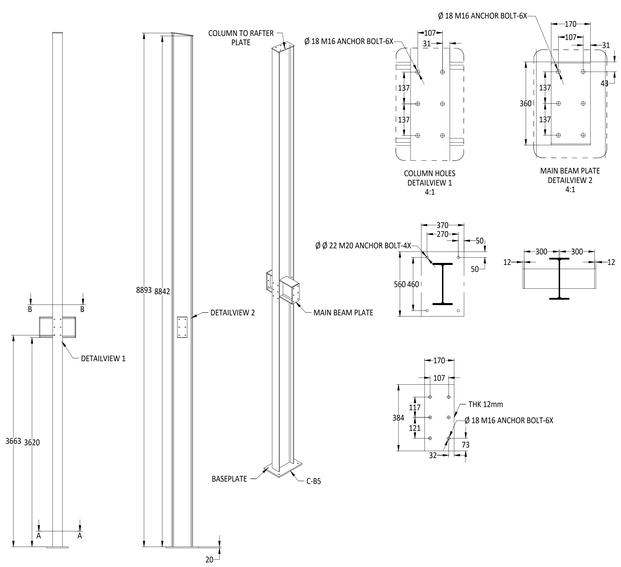

COLUMN C-B5 FABRICATION DETAILS

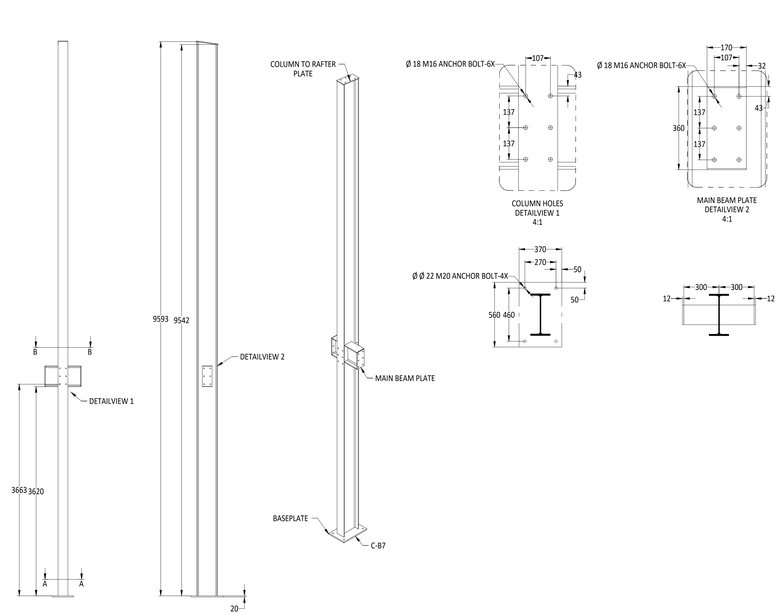

COLUMN C-B7 FABRICATION DETAILS

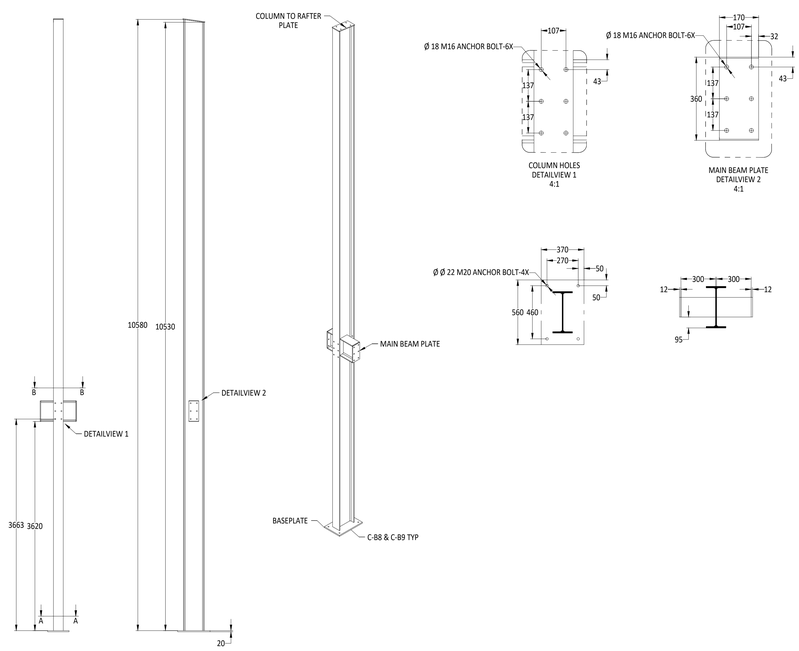

COLUMN C-B8 & C-B9 FABRICATION DETAILS

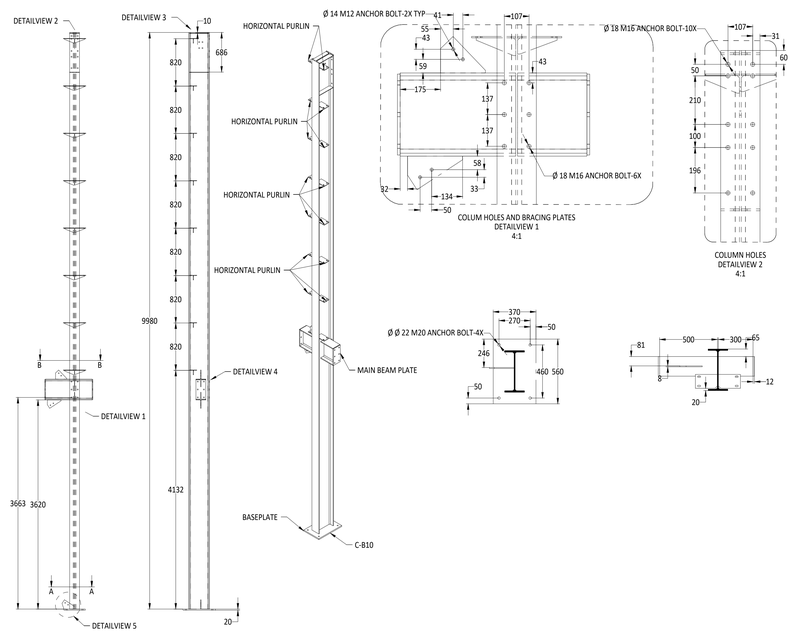

COLUMN C-B10 FABRICATION DETAILS

FRAME-B FABRICATION DETAILS

ASSEMBLY NO.	TITLE HANGER FRAME-B FABRICATION DETAILS			
PART NO.		SIZE A0	DWG NO	REV 00
DESIGNER				
APPROVED	SCALE AS SHOWN	RELEASE DATE 21/08/2025	WEIGHT Kg.	QTY.

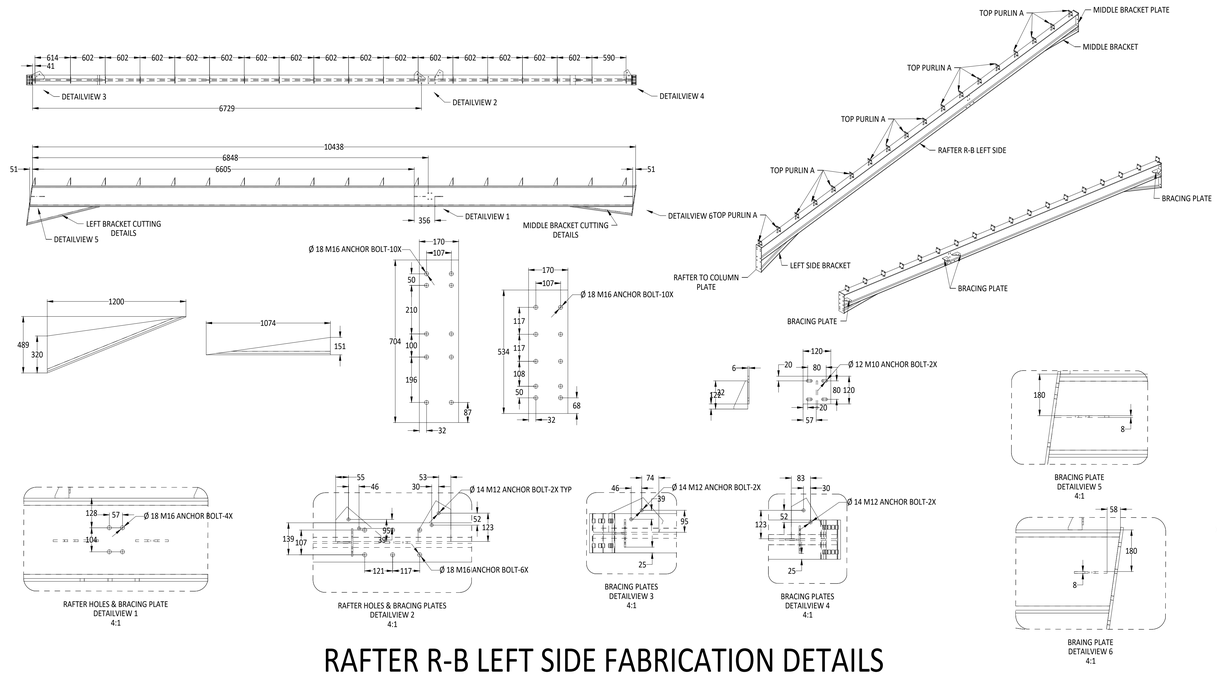

RAFTER R-B LEFT SIDE FABRICATION DETAILS

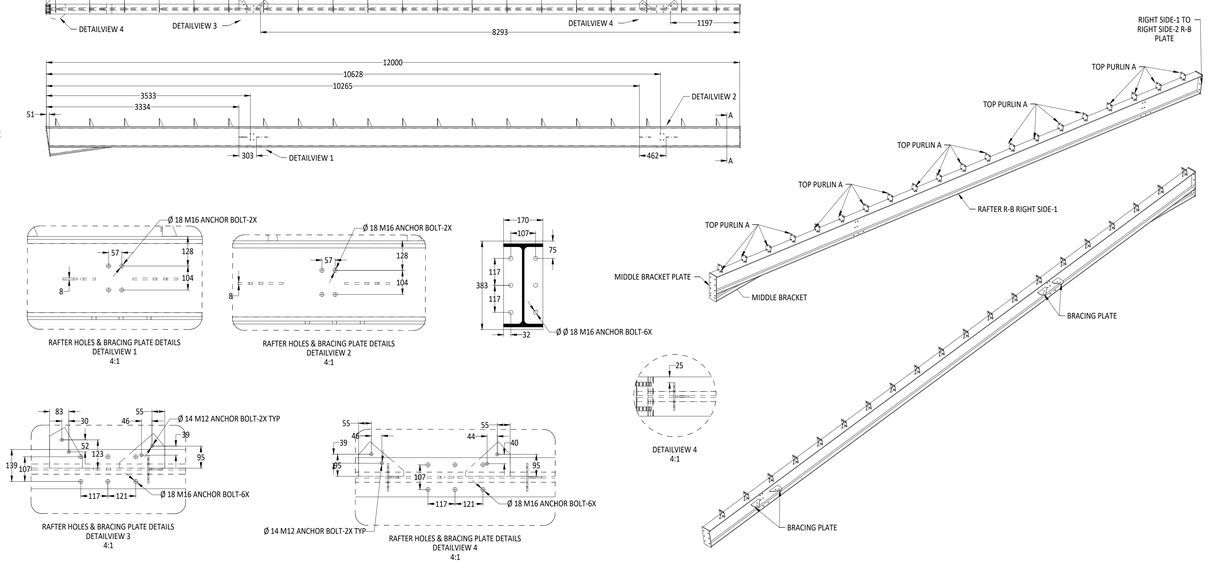

RAFTER R-B RIGHT SIDE-1 FABRICATION DETAILS

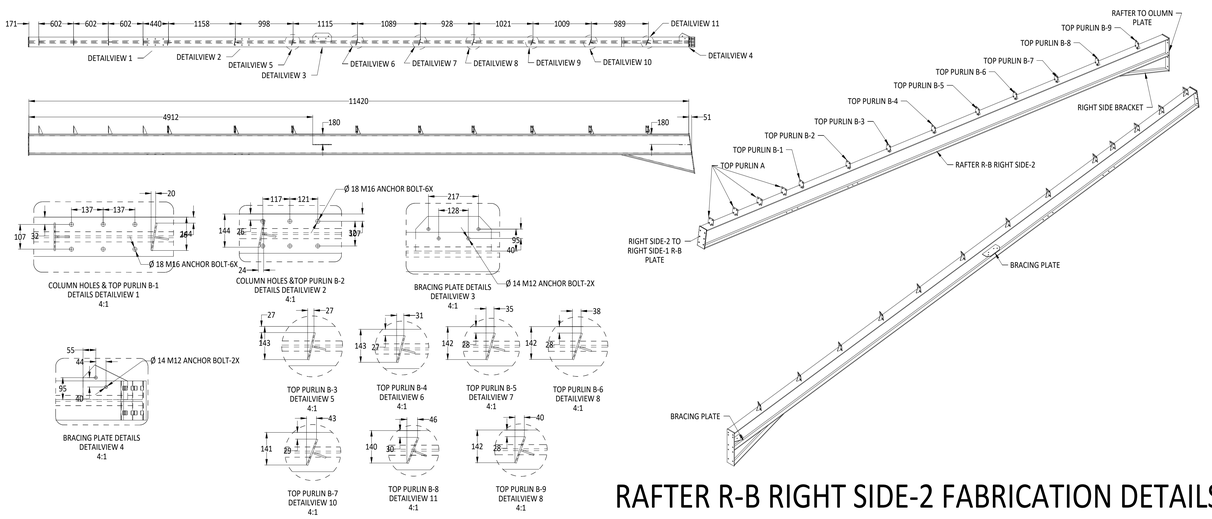

RAFTER R-B RIGHT SIDE-2 FABRICATION DETAILS

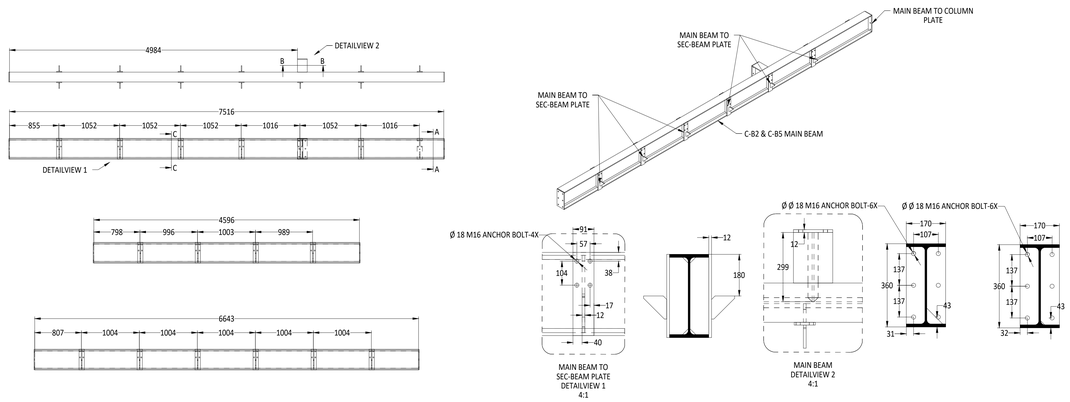

ASSEMBLY NO.	TITLE HANGER FRAME-B FABRICATION DETAILS		
PART NO.			
DESIGNER	SIZE A0	DWG NO	REV 00
APPROVED	SCALE AS SHOWN	RELEASE DATE 21/08/2025	WEIGHT Kg. / QTY.

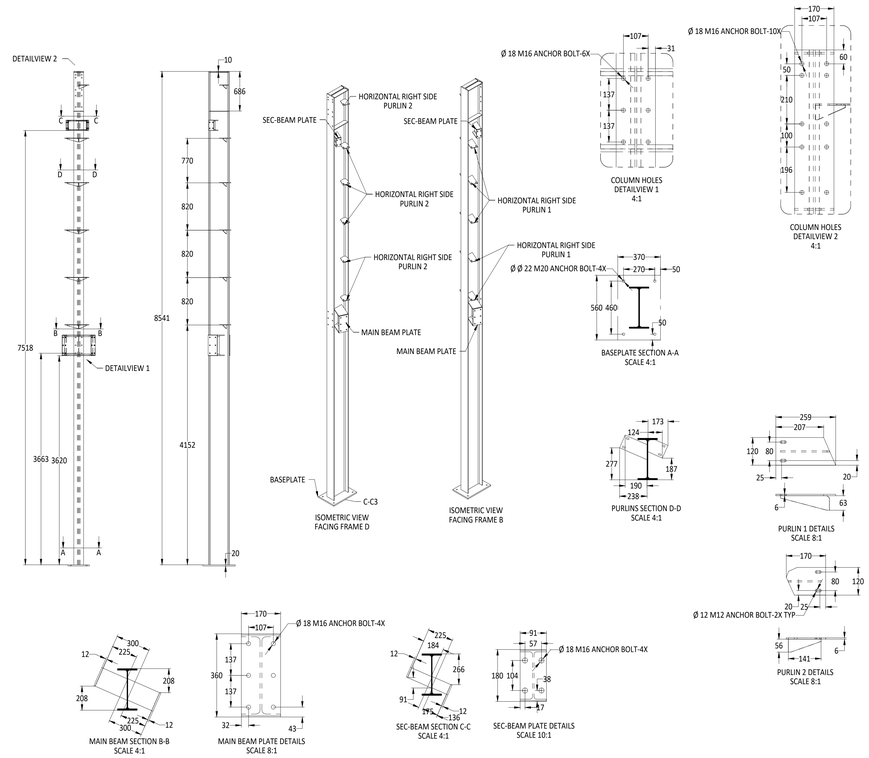

COLUMN C-C3 FABRICATION DETAILS

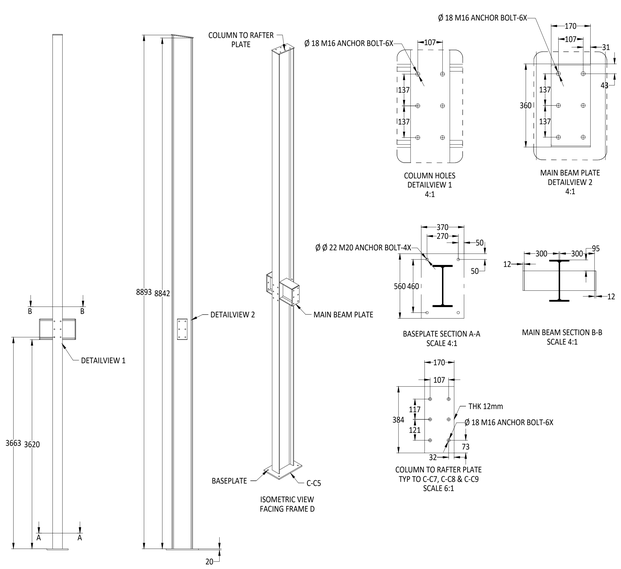

COLUMN C-C5 FABRICATION DETAILS

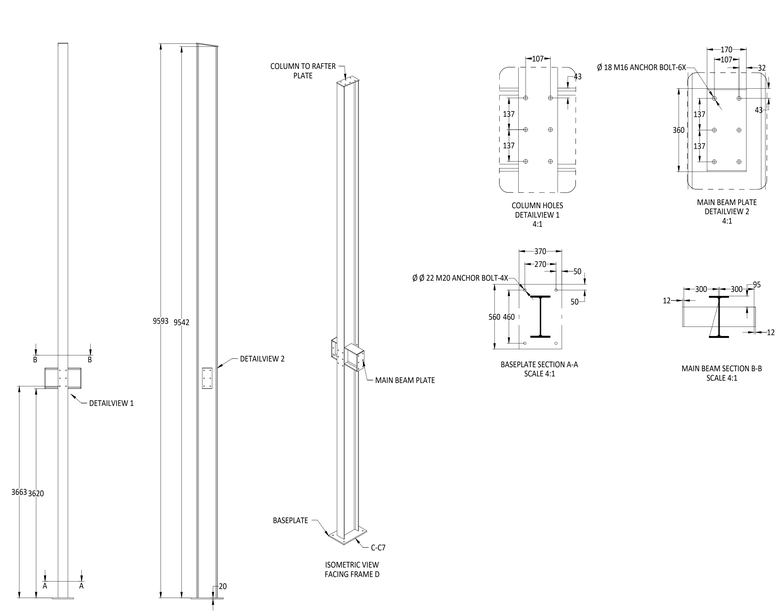

COLUMN C-C7 FABRICATION DETAILS

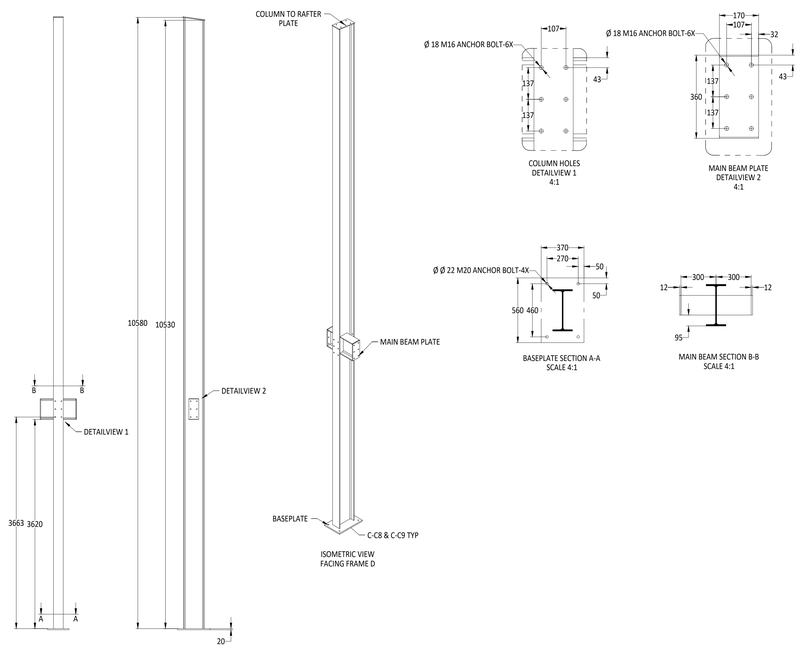

COLUMN C-C8 & C-C9 FABRICATION DETAILS

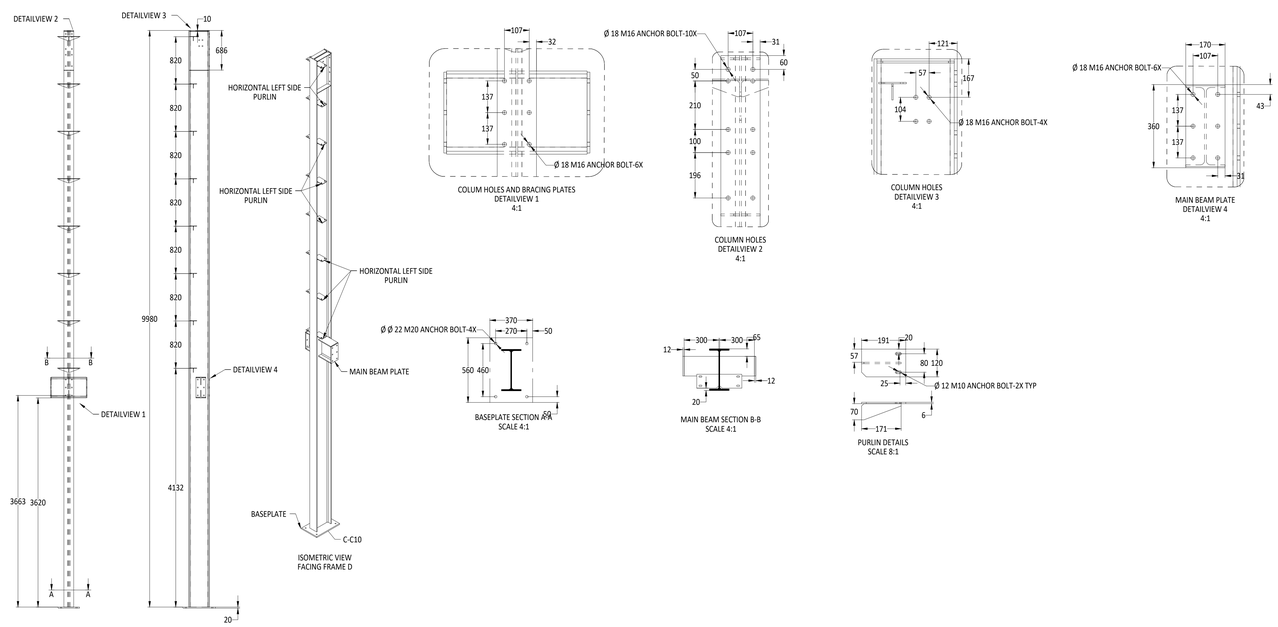

COLUMN C-C10 FABRICATION DETAILS

FRAME-B FABRICATION DETAILS

ASSEMBLY NO.	TITLE HANGER FRAME-C FABRICATION DETAILS		
PART NO.	SIZE A0	DWG NO	REV 00
DESIGNER			
APPROVED	SCALE AS SHOWN	RELEASE DATE 21/08/2025	WEIGHT Kg. / QTY.

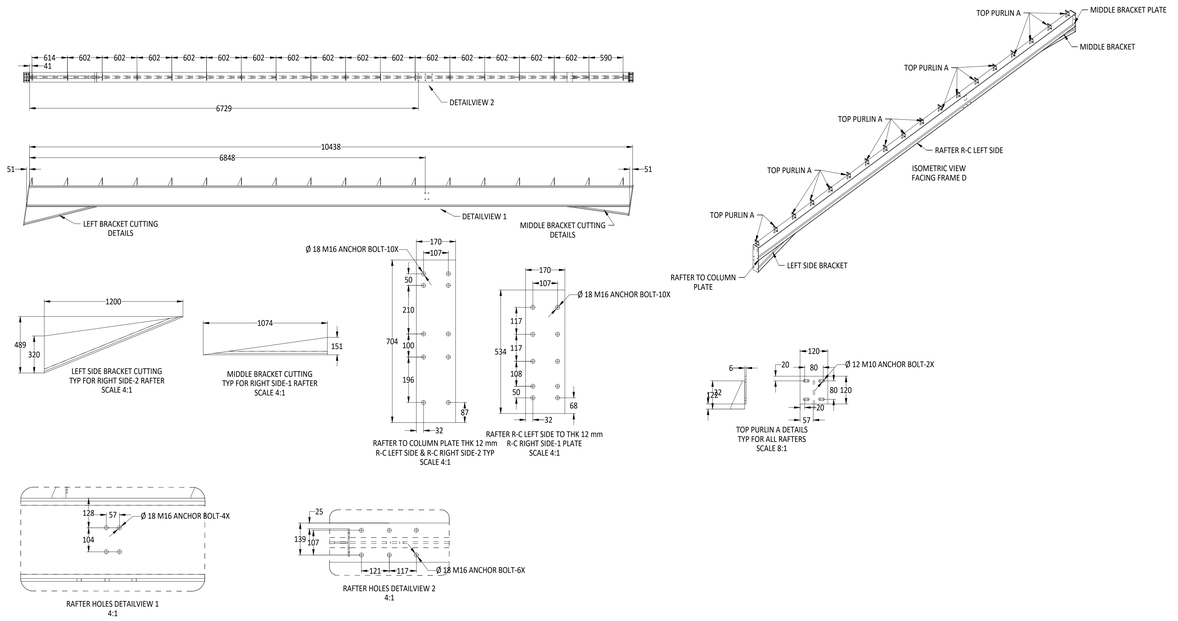

RAFTER R-C LEFT SIDE FABRICATION DETAILS

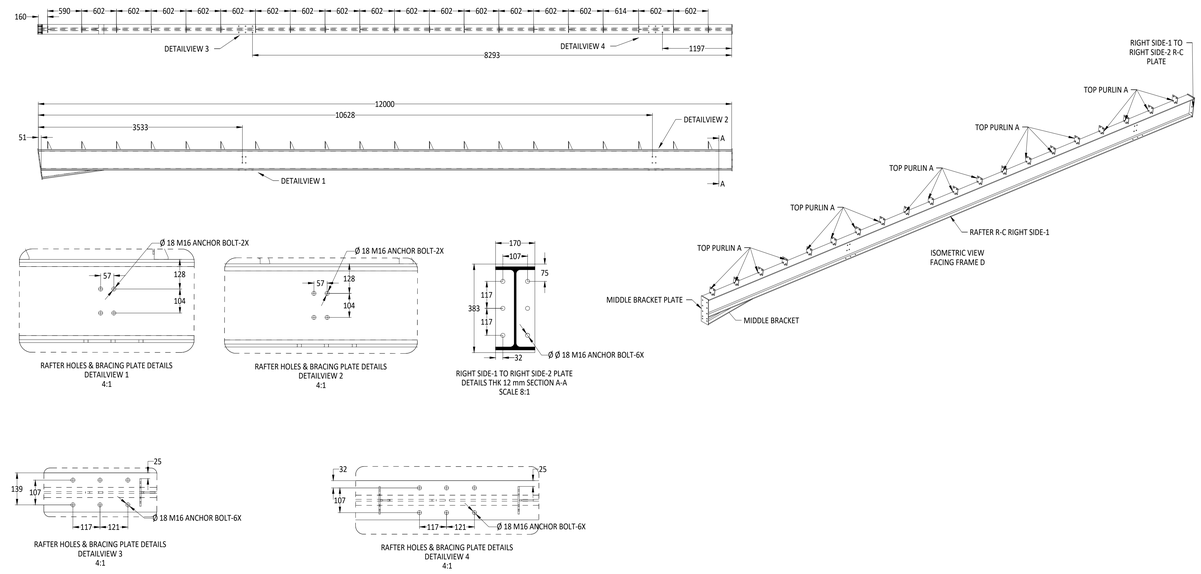

RAFTER R-C RIGHT SIDE-1 FABRICATION DETAILS

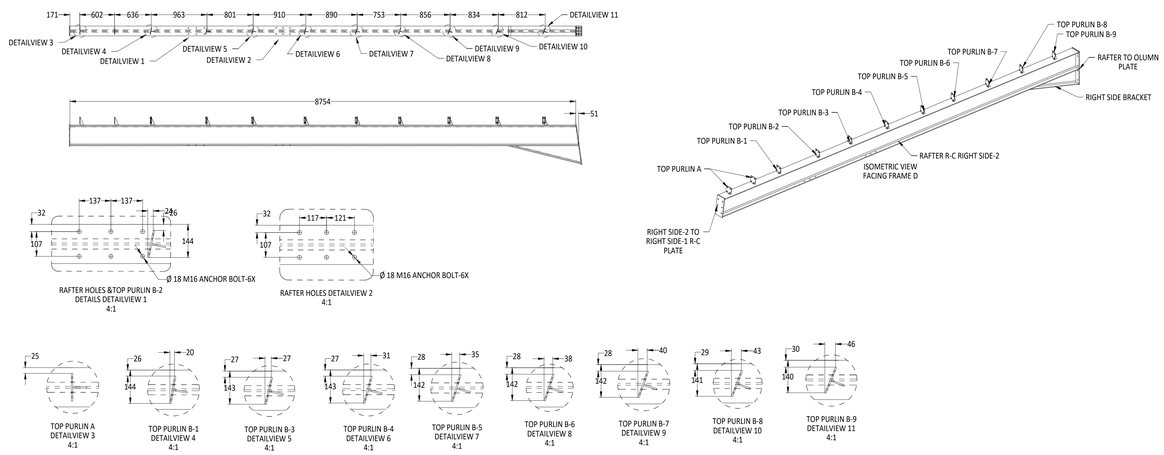

RAFTER R-C RIGHT SIDE-2 FABRICATION DETAILS

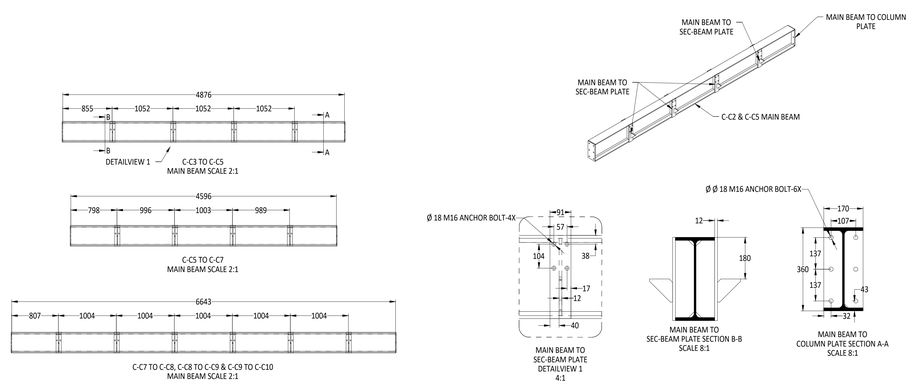

MAIN BEAMS FABRICATION DETAILS

ASSEMBLY NO.	TITLE HANGER FRAME-C FABRICATION DETAILS				
PART NO.		SIZE A0	DWG NO		REV 00
DESIGNER					
APPROVED		SCALE AS SHOWN	RELEASE DATE 21/08/2025	WEIGHT Kg.	QTY.

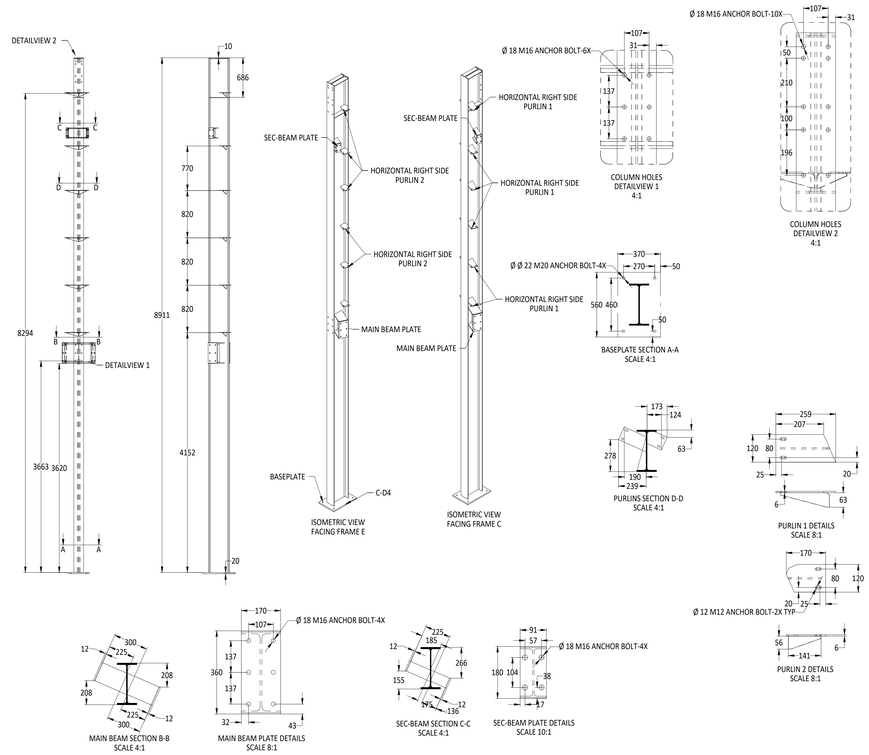

COLUMN C-D4 FABRICATION DETAILS

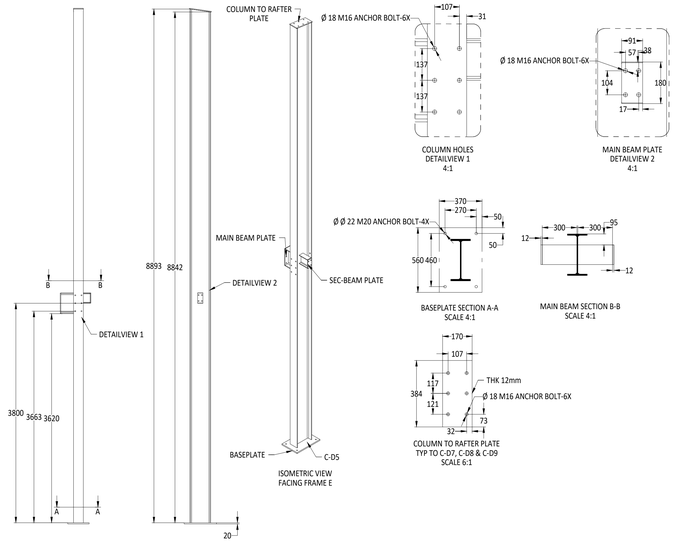

COLUMN C-D5 FABRICATION DETAILS

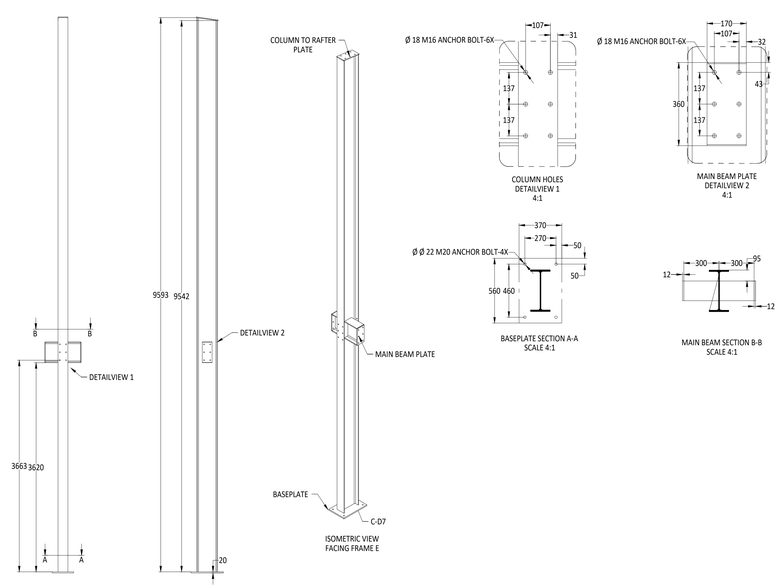

COLUMN C-D7 FABRICATION DETAILS

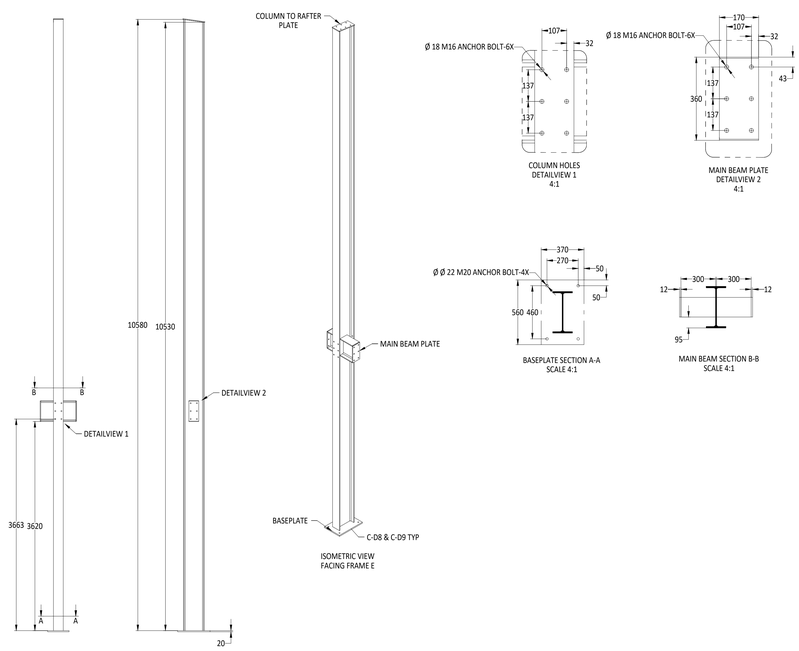

COLUMN C-D8 & C-D9 FABRICATION DETAILS

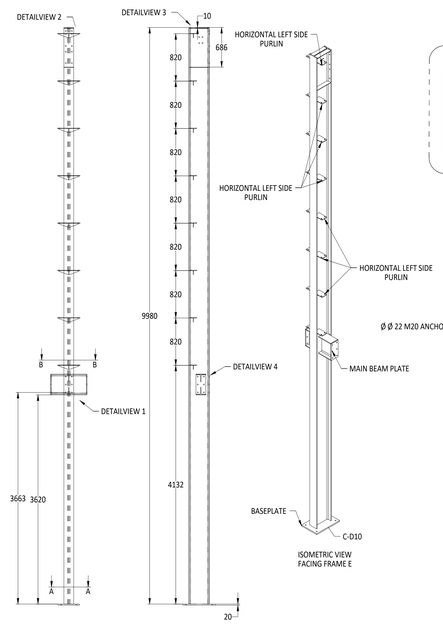

COLUMN C-D10 FABRICATION DETAILS

FRAME-D FABRICATION DETAILS

ASSEMBLY NO.		TITLE HANGER FRAME-D FABRICATION DETAILS			
PART NO.			SIZE A0	DWG NO	REV 00
DESIGNER					
APPROVED		SCALE AS SHOWN	RELEASE DATE 21/08/2025	WEIGHT Kg.	QTY.

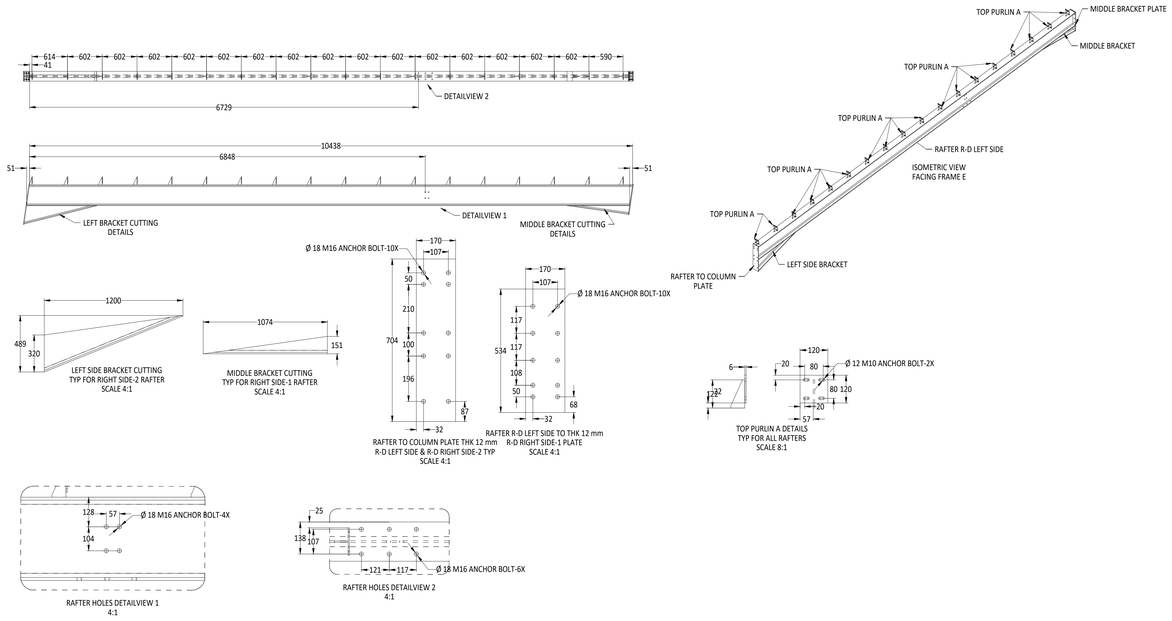

RAFTER R-D LEFT SIDE FABRICATION DETAILS

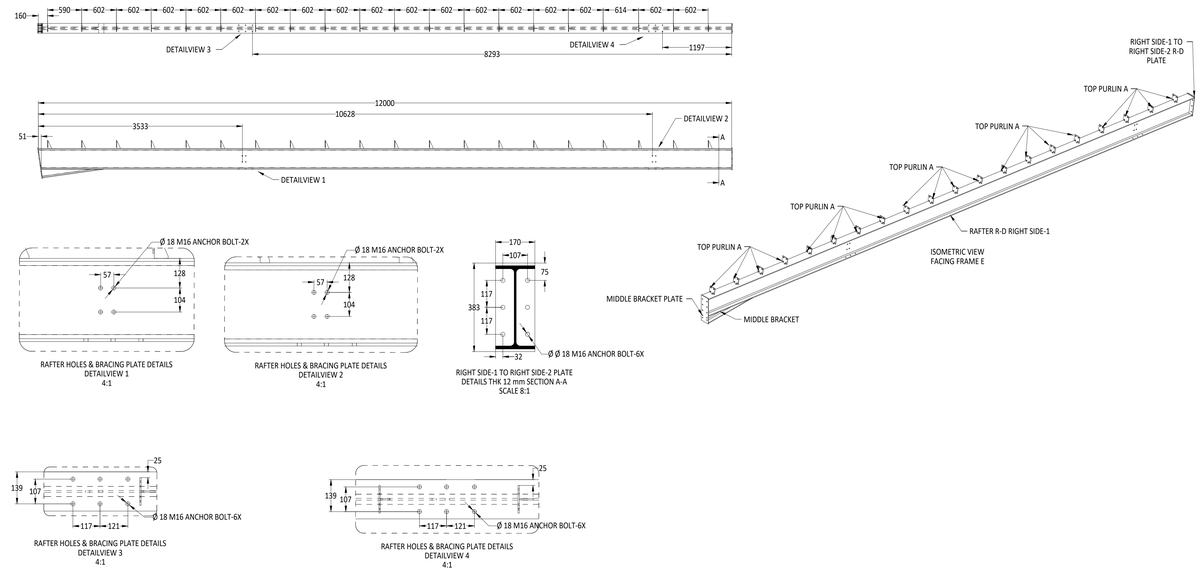

RAFTER R-D RIGHT SIDE-1 FABRICATION DETAILS

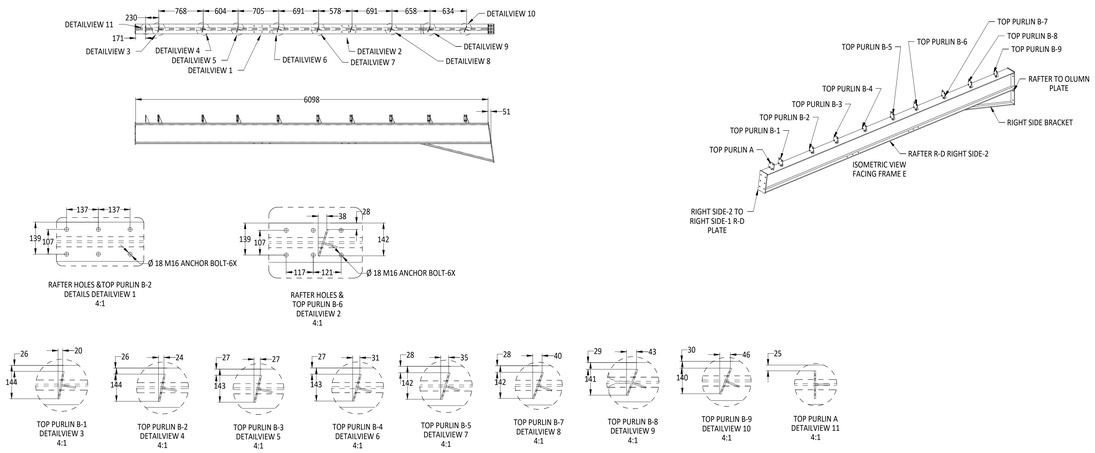

RAFTER R-D RIGHT SIDE-2 FABRICATION DETAILS

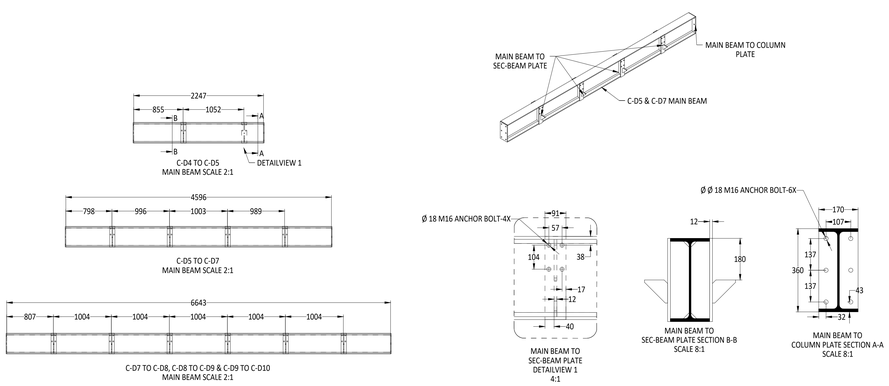

MAIN BEAMS FABRICATION DETAILS

ASSEMBLY NO.	TITLE HANGER FRAME-D FABRICATION DETAILS				
PART NO.		SIZE A0	DWG NO		REV 00
DESIGNER					
APPROVED		SCALE AS SHOWN	RELEASE DATE 21/08/2025	WEIGHT Kg.	QTY.

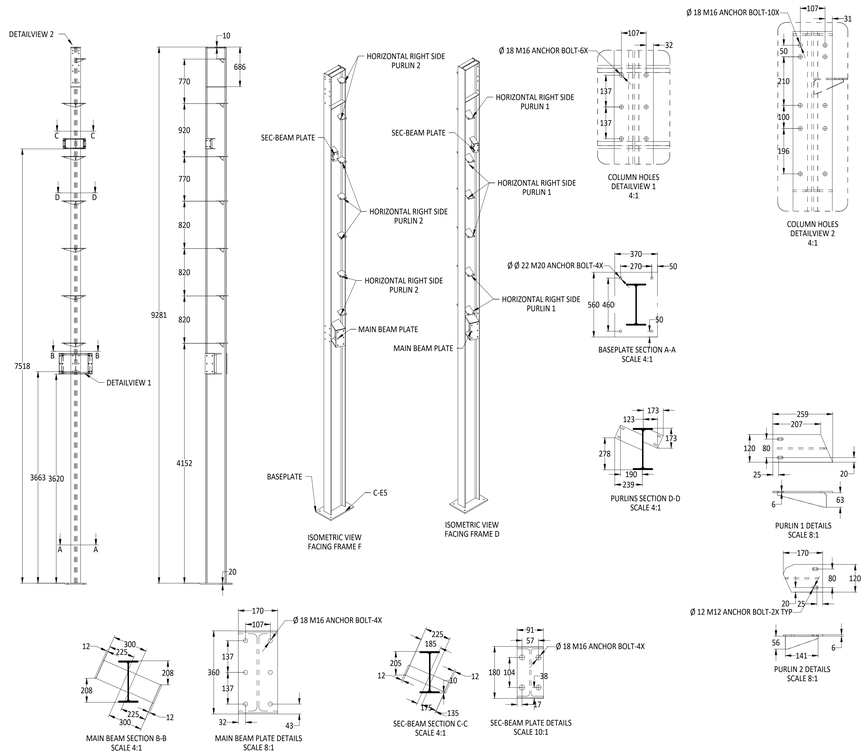

COLUMN C-E5 FABRICATION DETAILS

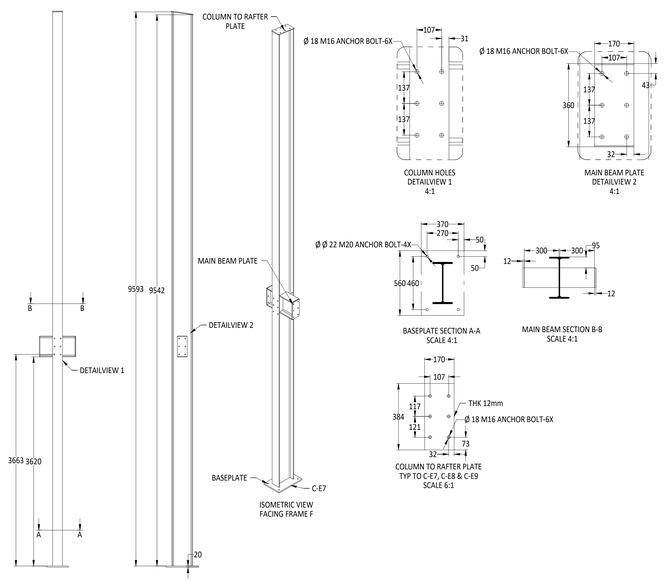

COLUMN C-E7 FABRICATION DETAILS

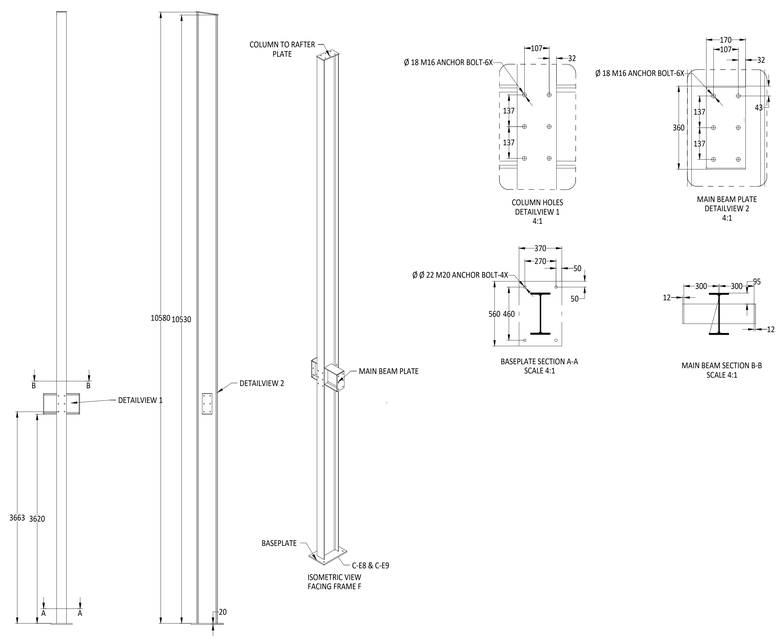

COLUMN C-E8 & C-E9 FABRICATION DETAILS

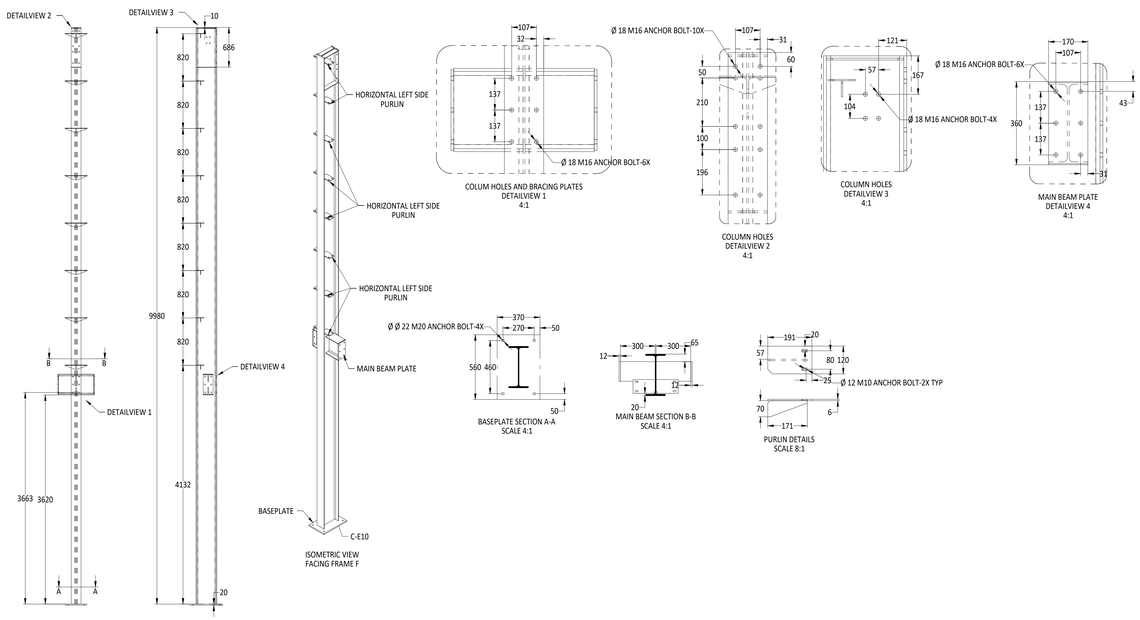

COLUMN C-E10 FABRICATION DETAILS

FRAME-E FABRICATION DETAILS

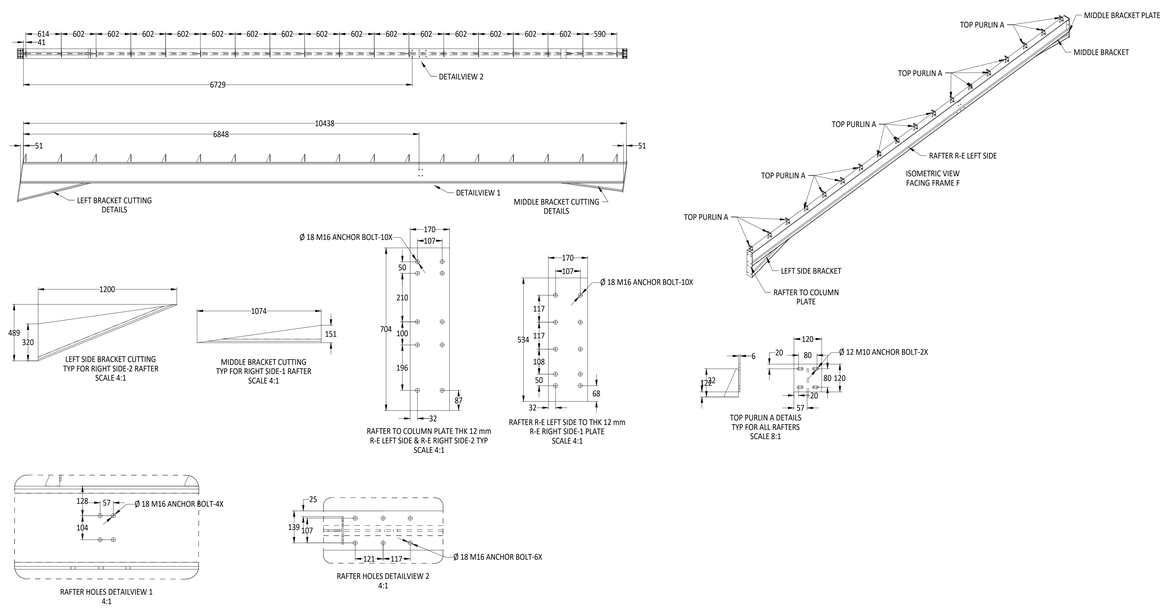

RAFTER R-E LEFT SIDE FABRICATION DETAILS

ASSEMBLY NO.	TITLE HANGER FRAME-E FABRICATION DETAILS			
PART NO.	SIZE A0	DWG NO		REV 00
DESIGNER				
APPROVED	SCALE AS SHOWN	RELEASE DATE 21/08/2025	WEIGHT Kg.	QTY.

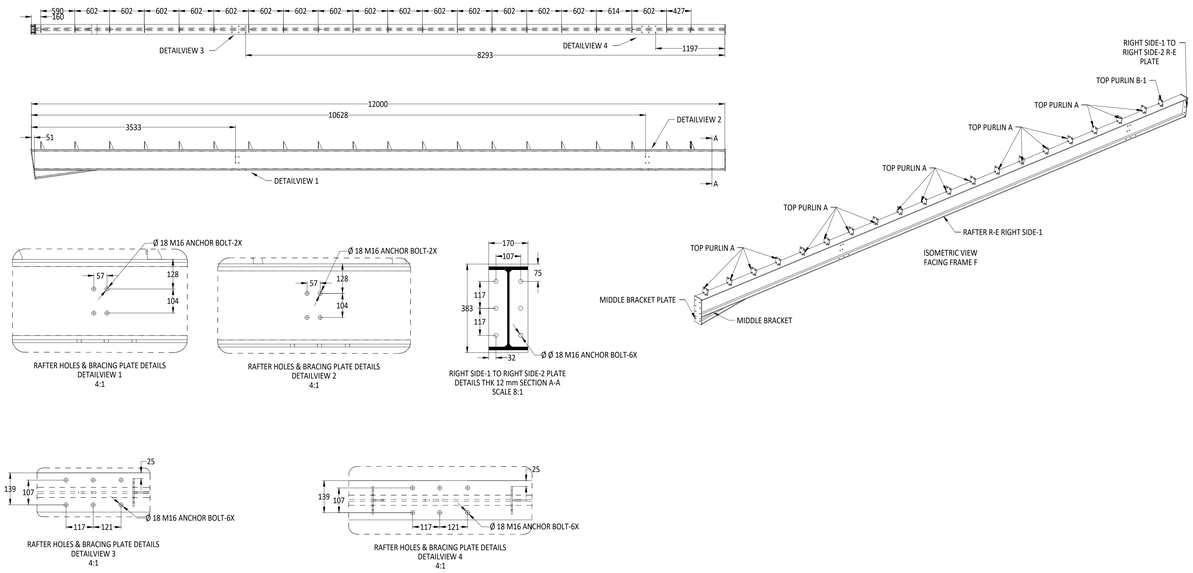

RAFTER R-E RIGHT SIDE-1 FABRICATION DETAILS

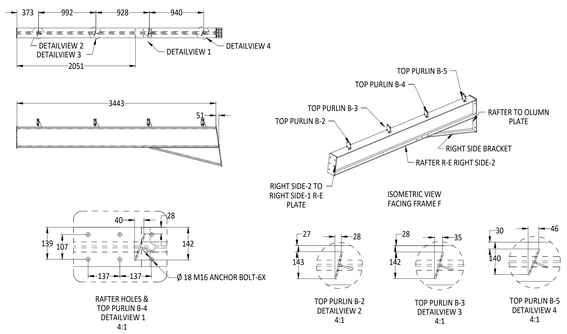

RAFTER R-E RIGHT SIDE-2 FABRICATION DETAILS

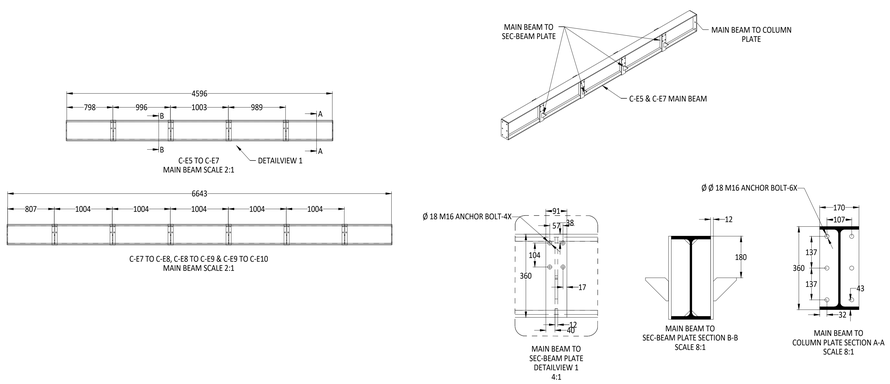

MAIN BEAMS FABRICATION DETAILS

ASSEMBLY NO.	TITLE HANGER FRAME-E FABRICATION DETAILS				
PART NO.		SIZE A0	DWG NO		REV 00
DESIGNER					
APPROVED		SCALE AS SHOWN	RELEASE DATE 21/08/2025	WEIGHT Kg.	QTY.

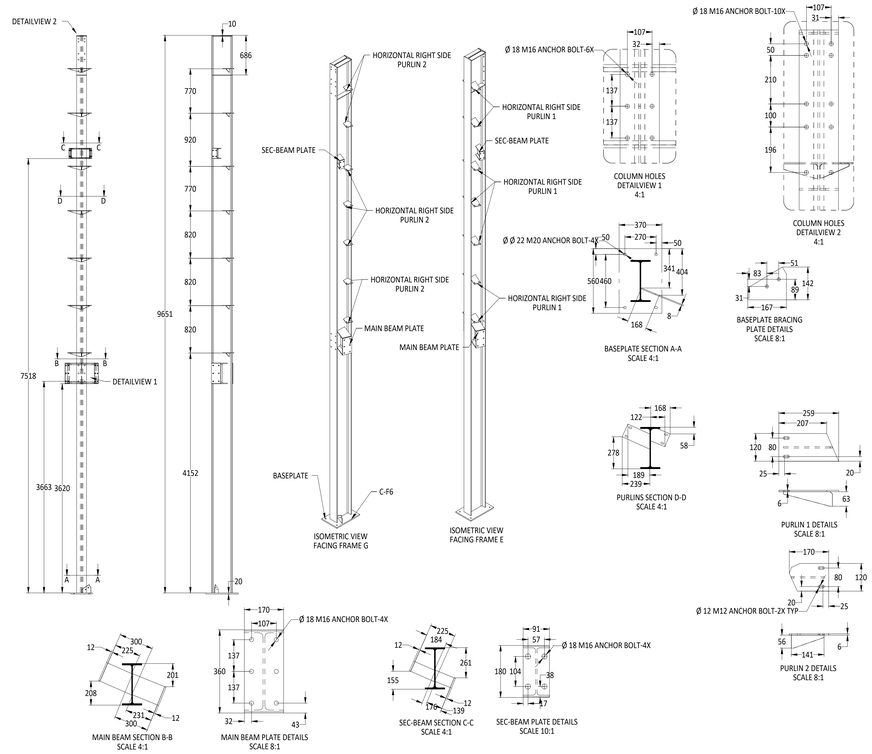

COLUMN C-F6 FABRICATION DETAILS

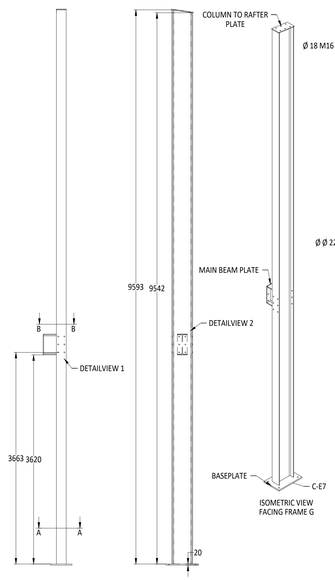

COLUMN C-F7 FABRICATION DETAILS

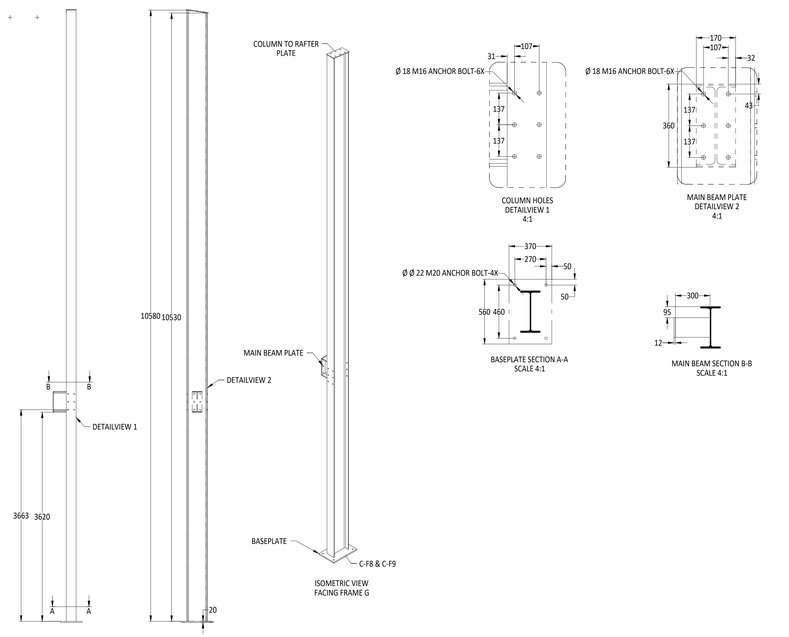

COLUMN C-F8 & C-F9 FABRICATION DETAILS

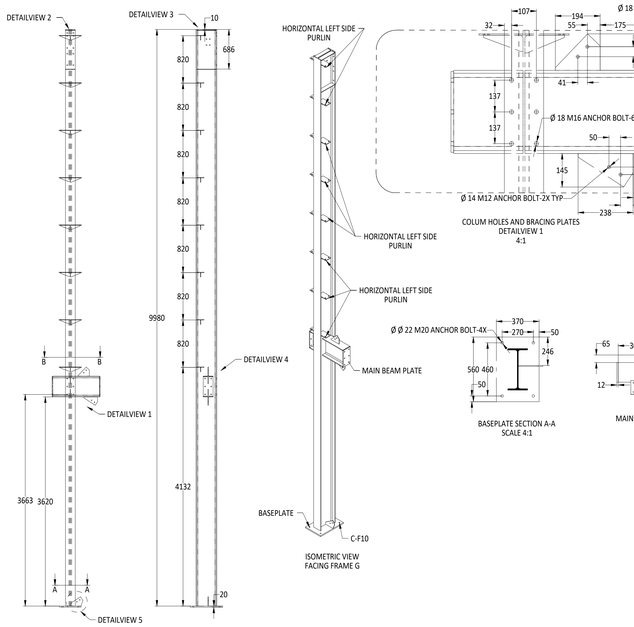

COLUMN C-F10 FABRICATION DETAILS

FRAME-F FABRICATION DETAILS

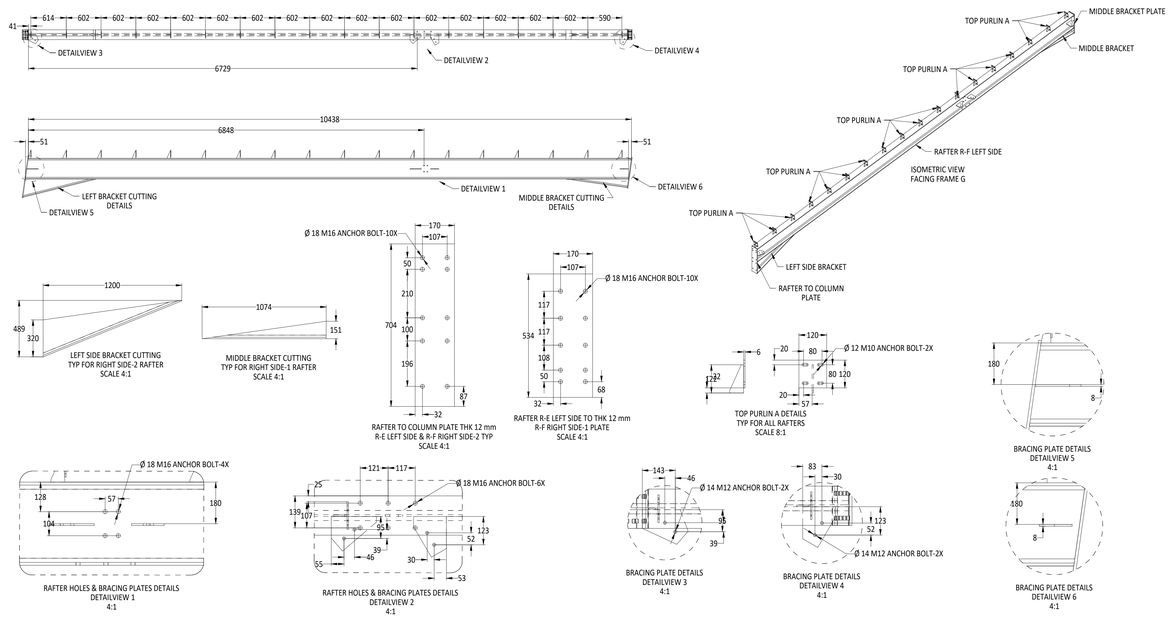

RAFTER R-F LEFT SIDE FABRICATION DETAILS

ASSEMBLY NO.	TITLE HANGER FRAME-F FABRICATION DETAILS		
PART NO.	SIZE A0	DWG NO	REV 00
DESIGNER			
APPROVED	SCALE AS SHOWN	RELEASE DATE 21/08/2025	WEIGHT Kg. / QTY.

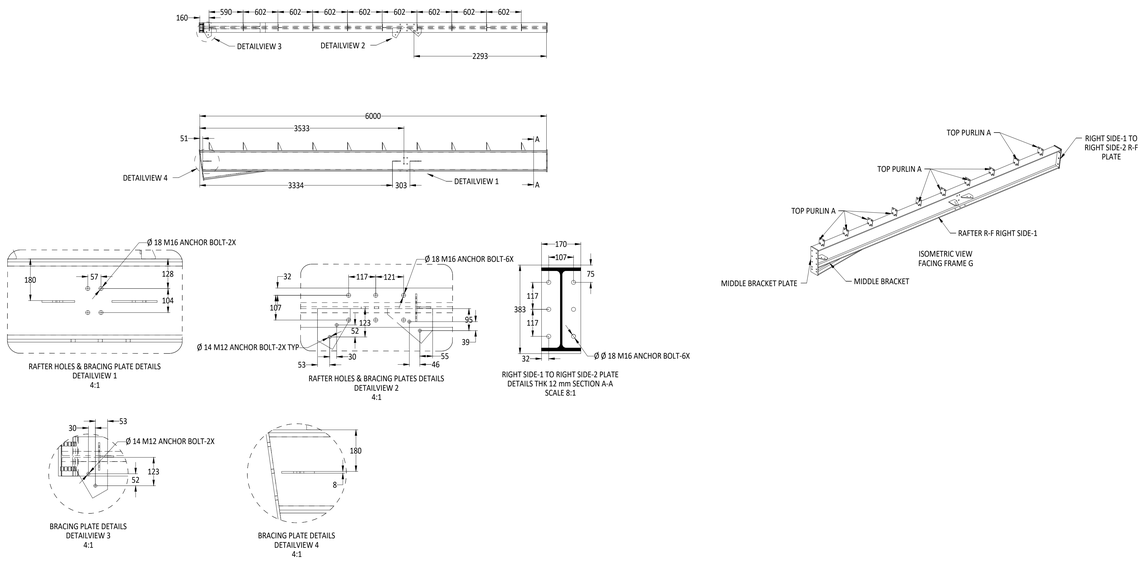

RAFTER R-F RIGHT SIDE-1 FABRICATION DETAILS

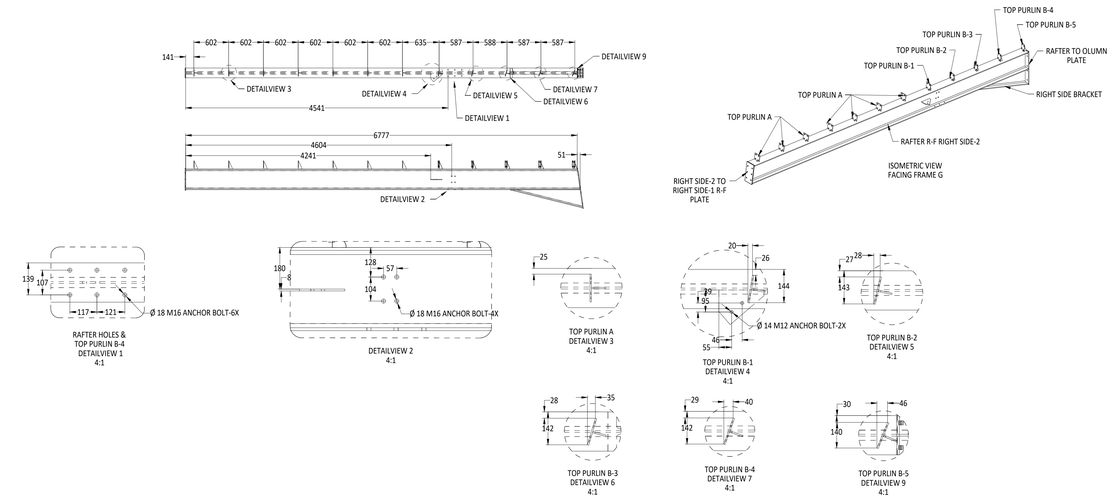

RAFTER R-F RIGHT SIDE-2 FABRICATION DETAILS

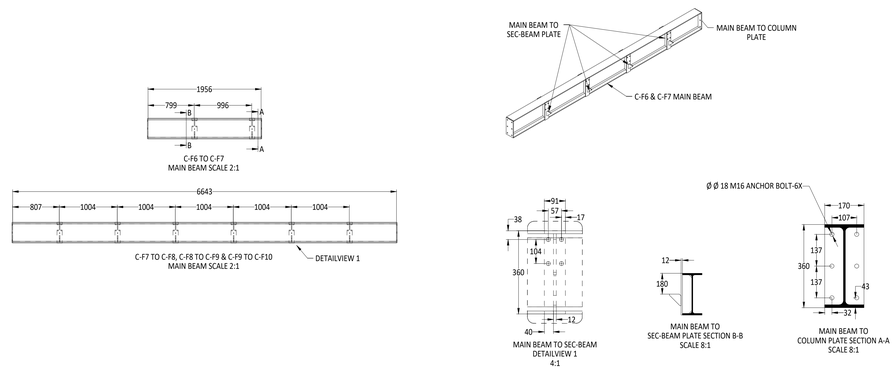

MAIN BEAMS FABRICATION DETAILS

ASSEMBLY NO.	TITLE HANGER FRAME-F FABRICATION DETAILS				
PART NO.		SIZE A0	DWG NO		REV 00
DESIGNER					
APPROVED		SCALE AS SHOWN	RELEASE DATE 21/08/2025	WEIGHT Kg.	QTY.

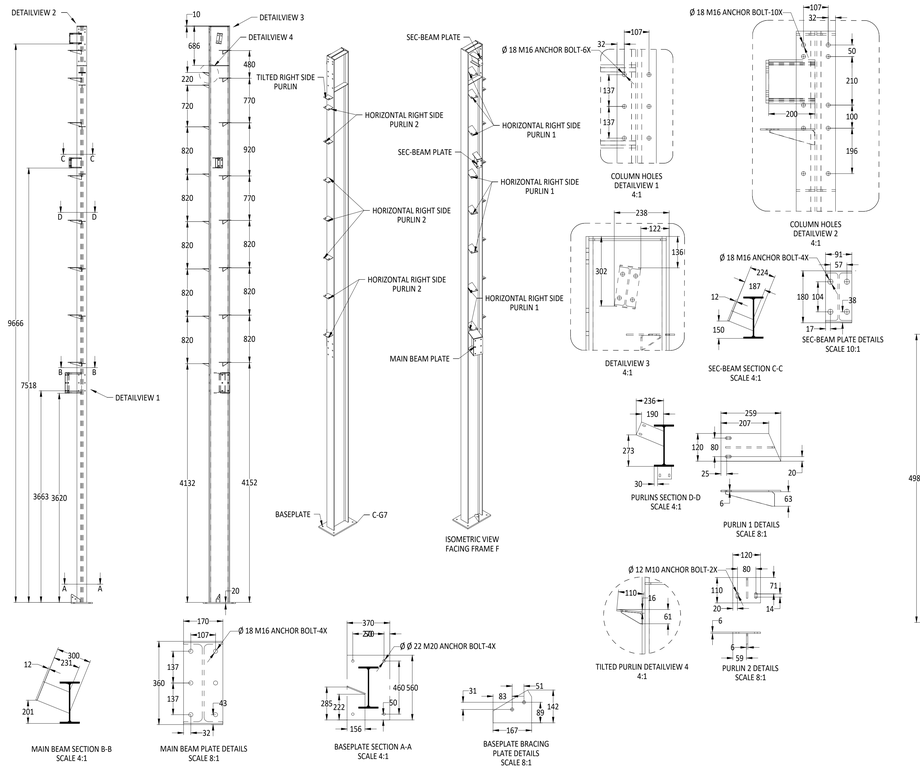

COLUMN C-G7 FABRICATION DETAILS

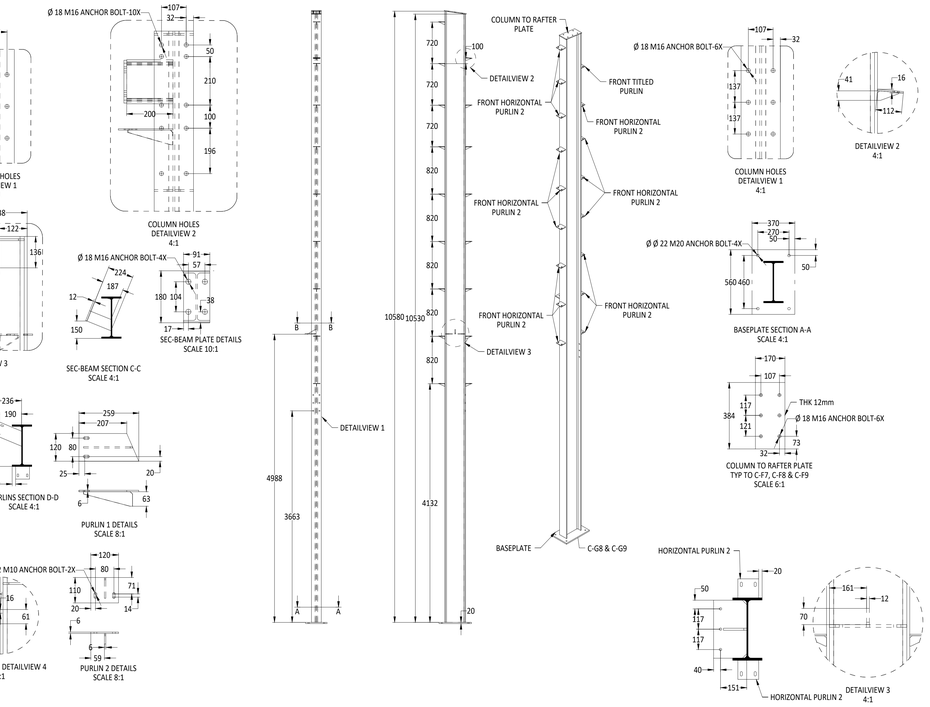

COLUMN C-G8 & C-G9 FABRICATION DETAILS

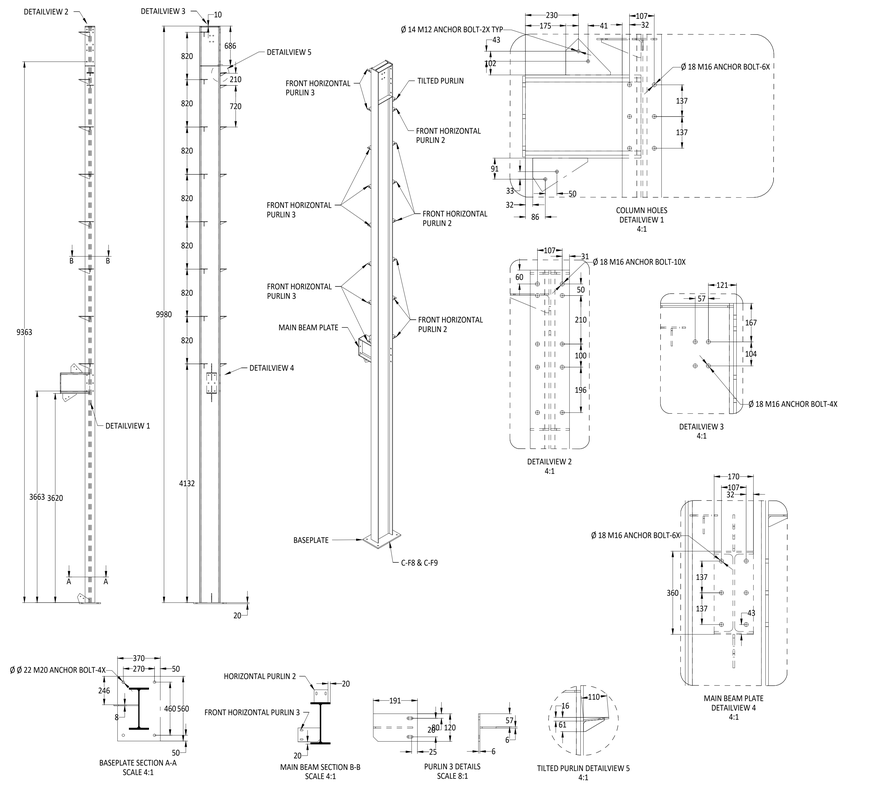

COLUMN C-G10 FABRICATION DETAILS

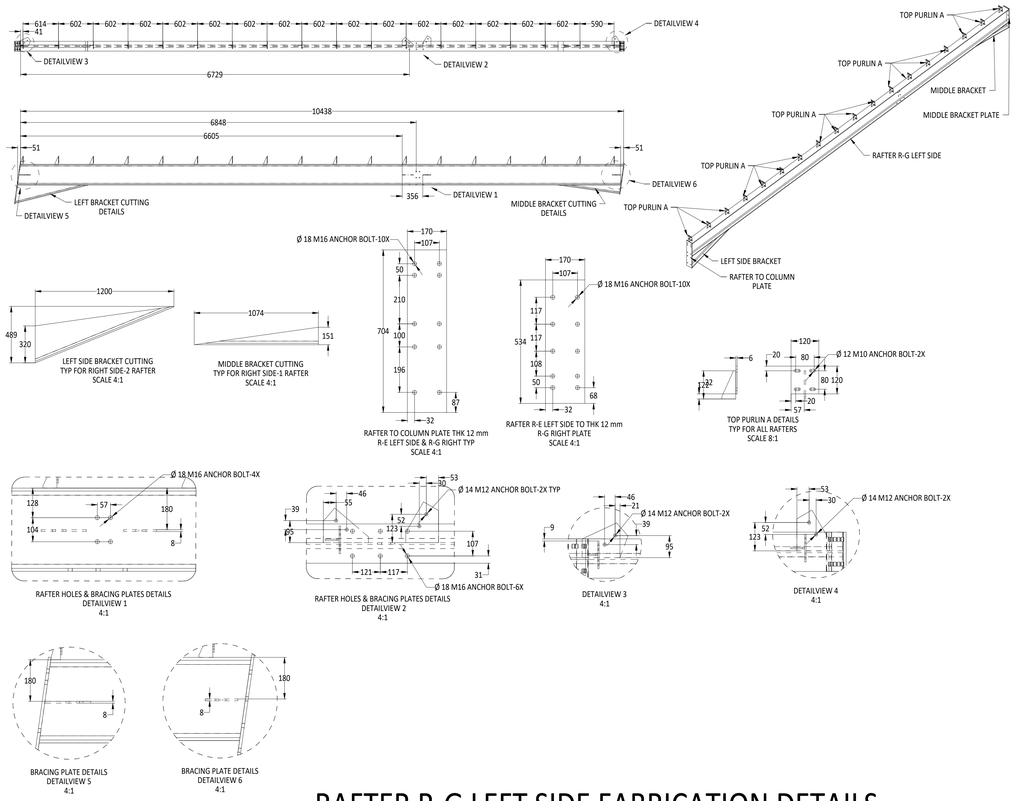

RAFTER R-G LEFT SIDE FABRICATION DETAILS

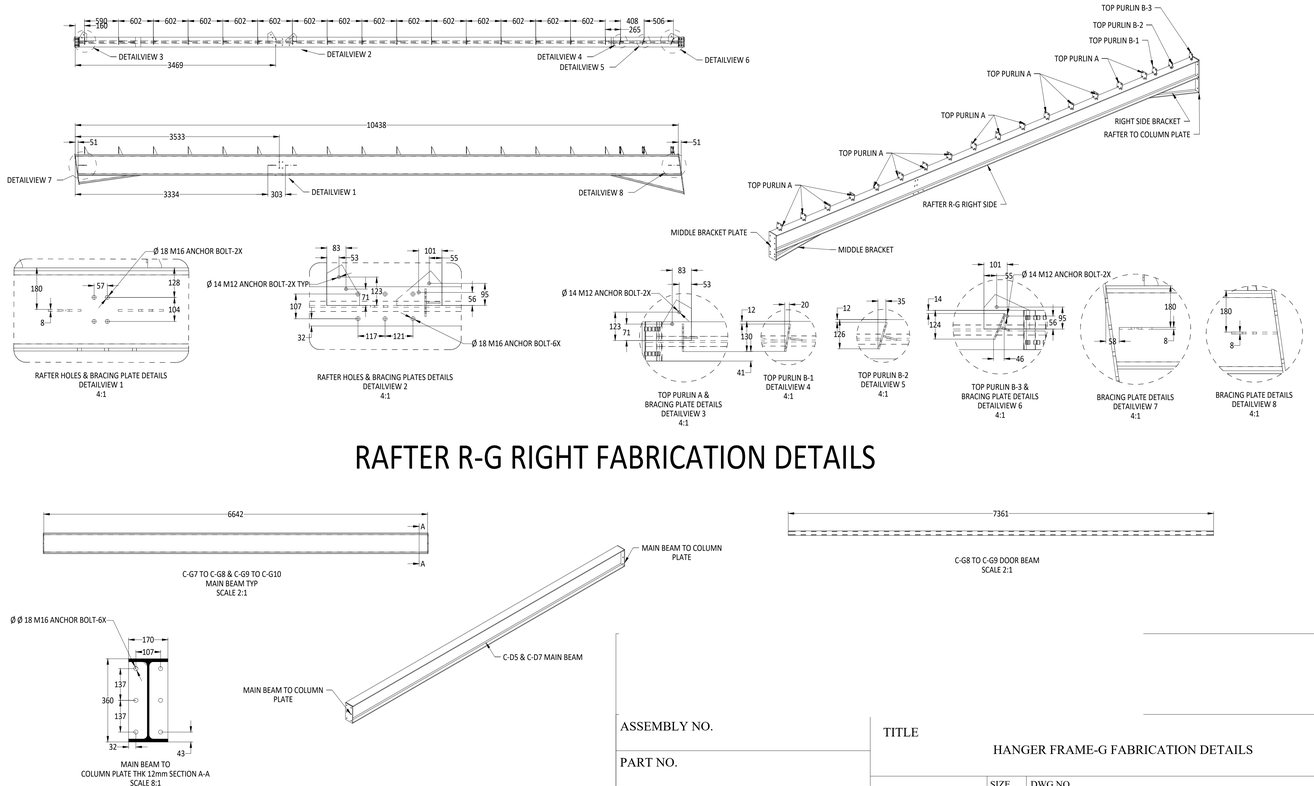

RAFTER R-G RIGHT FABRICATION DETAILS

MAIN BEAMS FABRICATION DETAILS

ASSEMBLY NO.	TITLE HANGER FRAME-G FABRICATION DETAILS			
PART NO.		SIZE A0	DWG NO	REV 00
DESIGNER				
APPROVED		SCALE AS SHOWN	RELEASE DATE 21/08/2025	WEIGHT Kg.	QTY.