مدينة زويل للعلوم والتكنولوجيا
Zewail City of Science and Technology

SPC 318: System Modeling and Linear Systems

Lecture 0

Course Presentation

Dr. Ahmed Khalifa

Adjunct Lecturer
Space and Communication Engineering
Zewail City of Science and Technology

Spring 2017

Agenda

- Course Description
- Course Objectives
- Course Intended Learning Outcomes
- Course Topics
- Course Assessment
- Course Project
- Course Policy
- Course Resources

Agenda

- **Course Description**
- Course Objectives
- Course Intended Learning Outcomes
- Course Topics
- Course Assessment
- Course Project
- Course Policy
- Course Resources

Course Description

- **Room Temperature (Objectives)**
  - **Accuracy:**
    - **Desired = Actual**
  - **Speed of response:**
    - **Time taken by the heater to reach desired**
  - **Protection:**
    - **From over temperature**

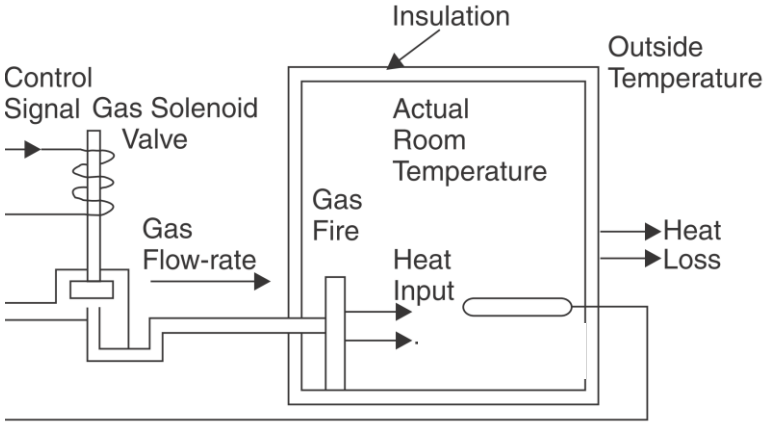

Oven

Open Loop

Impossible to achieve our objectives

Course Description

Solution: Use feedback

- **Room Temperature**
  - **Accuracy:**
    - **Desired = Actual**
  - **Speed of response:**
    - **Time taken by the heater to reach desired**
  - **Protection:**
    - **from over temperature**

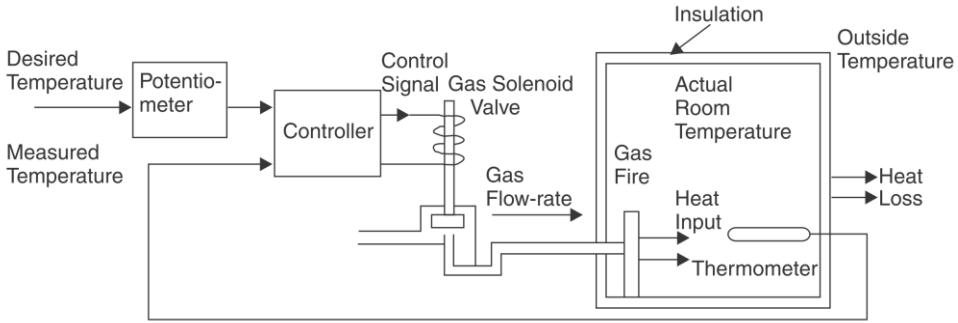

Oven

Feedback Controlled

Easy to achieve our objectives

Course Description

Main steps to design a control system

- **So, we need system model**
  - **To study relation btw input & output**
  - **To evaluate system performance (Our objectives)**
    - **Before control and after applying control technique**
    - **Before applying the control system in real time**
  - **Many control techniques are built based on system model**

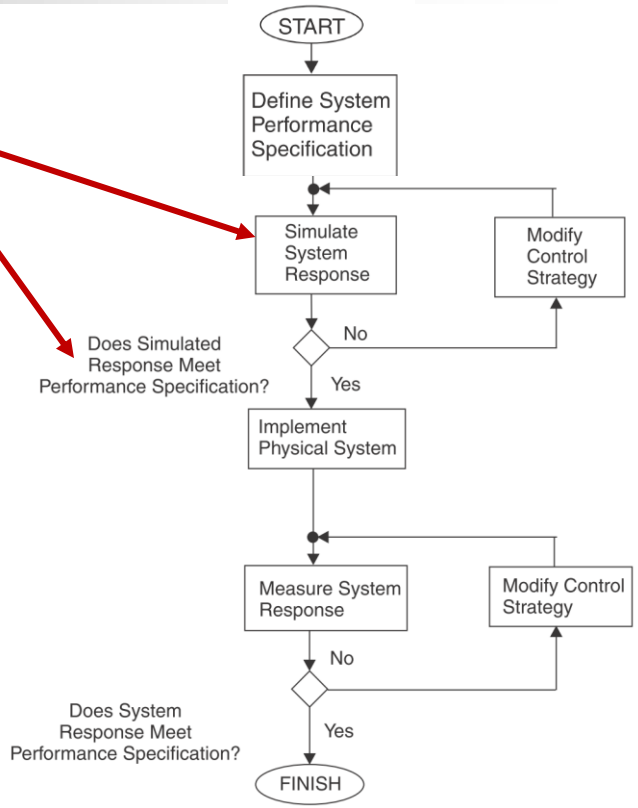

Modeling ➔ Analysis ➔ Design

Main Tasks required to Design a Control System

Modeling
- Describe system I/O relationship

Analysis
- Evaluate system performance either before or after control

Design
- Achieve target performance

Implement
- Real time application of designed and tested control algorithm

Agenda

- Course Description
- **Course Objectives**
- Course Intended Learning Outcomes
- Course Topics
- Course Assessment
- Course Project
- Course Policy
- Course Resources

Course Objectives

- System modeling and Control are integral parts of all aerospace applications, from aircraft and spacecraft to robots and process control systems.
- Learning how to linearize and construct mathematical models for dynamical systems will help you to
  - Evaluate the behavior of the proposed system, and
  - Optimize system performance via controller design.
- Learning how to design and implement a simple control algorithm will help you to
  - Achieve the target performance of the system to be controlled.

Agenda

- Course Description
- Course Objectives
- **Course Intended Learning Outcomes**
- Course Topics
- Course Assessment
- Course Project
- Course Policy
- Course Resources

Course Intended Learning Outcomes

- **Understand the construction and importance of feedback control systems.**
- **Model a system and represent it in the form of differential equations and transfer function**
- **Analyze system in the time domain and frequency domain**
- **Evaluate the behavior of LTI systems, both in the transient and steady-state regimes**
- **Study the system stability**
- **Design of a classical controller in the s-plane and frequency domain**
- **Understand and implement of a microprocessor-based control**
- **Analyze, design, simulate, implement, a control system in a modern computer language**
- **Coordinate working in a multifunctional team**
- **Prepare and present technical reports**

Agenda

- Course Description
- Course Objectives
- Course Intended Learning Outcomes
- **Course Topics**
- Course Assessment
- Course Project
- Course Policy
- Course Resources

Course Topics

- Introduction to Control Systems
- System Modeling
- Time Domain Analysis
- Closed Loop Control Systems
- Classical Design in the s-plane
- Classical Design in the Frequency Domain
- Discrete-Time Control Systems

Agenda

- Course Description
- Course Objectives
- Course Intended Learning Outcomes
- Course Topics
- **Course Assessment**
- Course Project
- Course Policy
- Course Resources

Assessment

Weight	Evaluation Method
30%	**Final** (you must score at least **50% in final to pass**)
20%	**Midterms** (2 midterms, **all counted**)
10%	**Pop quizzes** (5 to 10 randomly distributed – **all counted**)
40%	**Project** (Incl. 2 x 2.5% follow up reports + 5% paper)

Agenda

- Course Description
- Course Objectives
- Course Intended Learning Outcomes
- Course Topics
- Course Assessment
- **Course Project**
- Course Policy
- Course Resources

Course Project

Topics

- **The topics should include the modeling, analysis, control design, simulation, and experimental implementation of a physical system.**
- **The result of the course project will be a scientific paper (6 pages) along with part of the source code developed to solve a given problem.**
  - **IEEE Manuscript Template for conferences must be used.**

Course Project

Teams

- **The team should include four to eight students who will divide themselves into sub-teams working on the software and hardware developments.**
- **To register in a project, the team must submit a file with the following items to your course instructor's email address before March 1, 2017:**
  - **Names of team members, IDs, email address**
  - **Project title**
  - **Project introduction (motivation and objective)**

Agenda

- Course Description
- Course Objectives
- Course Intended Learning Outcomes
- Course Topics
- Course Assessment
- Course Project
- **Course Policy**
- Course Resources

Course Policy

- **Late Submission Policy:**
  - **Anything submitted after 11:59PM on the due date will be penalized by 50% for each 24 hours of lateness.**
- **Absence Policy:**
  - **Attendance in all academic activities is mandatory.**
  - **Students who are absent more than 25% of the time in the course should not be permitted to attend the final examination and should receive a W grade.**
- **No makeup exams should be offered for missed exams.**
- **Projects and all other assignments will be submitted in electronic format.**
- **No homework need to be submitted, they are just for personal practice and solutions will be provided to you.**

Agenda

- Course Description
- Course Objectives
- Course Intended Learning Outcomes
- Course Topics
- Course Assessment
- Course Project
- Course Policy
- **Course Resources**

Course Resources

- **Course Website:** Slack Page: https://zc-spc318-spring2017.slack.com/
  - Course material - Course announcements – Discussions - etc. . .
  - Desktop/Mobile app:
    - https://zc-spc318-spring2017.slack.com/downloads/windows

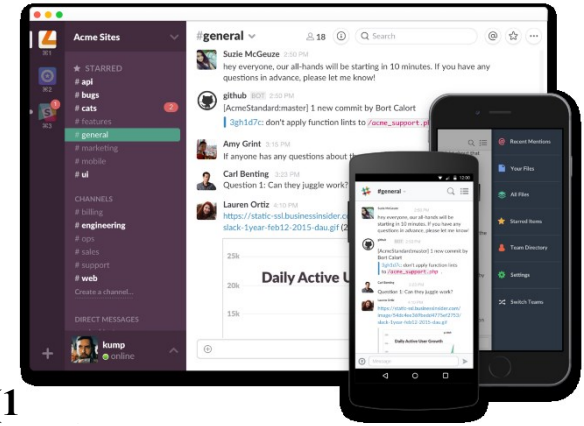

- **Textbook:**
  - Dorf, Richard C., and Robert H. Bishop. "Modern control systems." (1
- **References:**
  - Ogata K, Yang Y. Modern control engineering.
  - Burns, Roland. Advanced control engineering. Butterworth-Heinemann, 2001.
  - Ibrahim, Dogan. Microcontroller based applied digital control. John Wiley, 2006.

Course Resources

- **Course Instructor**
  - **Dr. Ahmed Khalifa**
  - **Email:** ahmed.khalifa0687@gmail.com
  - **Office:** Adjunct Professors Room
  - **Office hours:** 2 hrs. after lecture
- **Course TAs**
  - **Eng. Salah Morsi**
    - **Email:** smorsi@zewailcity.edu.eg
    - **Office: 158**
    - **Office hours: TBD**
  - **Eng. Ahmed Khairy**
    - **Email:** akhairy@zewailcity.edu.eg
    - **Office: 158**
    - **Office hours: TBD**

Lecture End

Questions?

ahmed.khalifa0687@gmail.com

ahmed.khalifa@el-eng.menofia.edu.eg