Solid Mechanics 2 Tutorial Sheets

Tutorial Sheets and Answers for DE2's Enjoyment

Tutorial Sheet 2: Planar Kinematics with Acceleration Answers

Topics covered are

- Acceleration in 2D
- Relative accelerations

Tips

- The questions start tp get quite wordy. Drawing it all out helps!
- Because we are dealing with 2D planar motion, it does not matter which relative acceleration formula we use - the one using $\omega \times \omega$ or ω^2. When expanding to 3D, only $\omega \times \omega$ works, but for the moment ω^2 is faster.

Question 1

The rigid body rotates about the z axis with counterclockwise angular velocity ω = 4 rad/s and counterclockwise angular acceleration α = 2 rad/s ^{2}. The distance $r_{A/B}$ = 0.6m.

(a) What are the rigid body's angular velocity and angular acceleration vectors?
(b) Determine the acceleration of point A relative to point B.

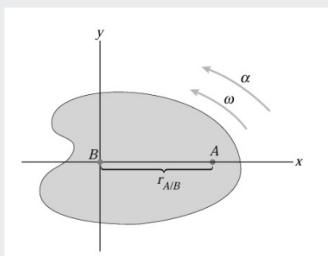

Answer

(a) Using the thumb rule, both are positive hence

$$\omega = 4k$$
$$\alpha = 6k$$

(b)

$$a_{A/B} = a_B + \alpha \times r_{A/B} + \omega \times (\omega \times r_{A/B})$$
$$a_{A/B} = 0 + 2k \times 0.6i + 4k \times (4k \times 0.6i)$$
$$a_{A/B} = -9.6i + 1.2j \text{ m/s}^2$$

or

$$a_{A/B} = a_B + \alpha \times r_{A/B} - \omega^2 r_{A/B}$$
$$a_{A/B} = 0 + 2k \times 0.6i - 4^2.0.6i$$
$$a_{A/B} = -9.6i + 1.2j \text{ m/s}^2$$

Question 2

The helicopter is in planar motion in the xy plane. At the instant shown, the position of its center of mass G is x=2 m, y=2.5 m, its velocity is v_G = 12i + 4j m/s, and its acceleration is a_G = 2i + 3j m/s ^{2}. The position of point T where the tail rotor is mounted is x=-3.5 m, y=4.5 m. The helicopter's angular velocity is 0.2 rad/s clockwise, and its angular acceleration is 0.1 rad/s ^{2} counter-clockwise.

What is the acceleration of point T?

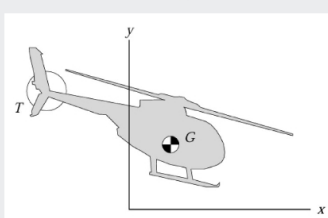

Answer

Draw it out

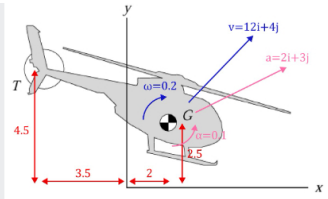

It then follows

$$a_T = a_G + \alpha \times r_{T/G} - \omega^2 r_{T/G}$$

$$a_T = 2i + 3j + \begin{vmatrix} i & j & k \\ 0 & 0 & 0.1 \\ -5.5 & 2 & 0 \end{vmatrix} - 0.2^2(-5.5i + 2j)$$

$$a_T = 2.02i + 2.37j \text{ m/s}^2$$

Question 3

The bar rotates with a counterclockwise angular velocity of 5 rad/s and a counterclockwise angular acceleration of 30 rad/s ^{2}. Determine the acceleration of A using $a_A = a_B + \alpha \times r_{A/B} + \omega \times (\omega \times r_{A/B})$.

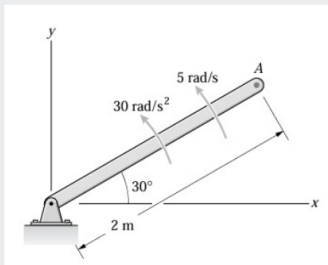

Answer

For this question, you use the full expansion version of the equation meaning a lot of cross products!

Assuming B as the axis of rotation

$$a_A = a_B + \alpha \times r_{A/B} + \omega \times (\omega \times r_{A/B})$$

$$a_A = \begin{vmatrix} i & j & k \\ 0 & 0 & 30 \\ 2\cos(30) & 2\sin(30) & 0 \end{vmatrix} + 5k \times \begin{vmatrix} i & j & k \\ 0 & 0 & 5 \\ 2\cos(30) & 2\sin(30) & 0 \end{vmatrix}$$

$$= -30i + 52j + \begin{vmatrix} i & j & k \\ 0 & 0 & 5 \\ -5 & 8.66 & 0 \end{vmatrix}$$

$$= -73.3i + 27j \text{ m/s}^2$$

Question 4

If ω_{AB}=2rad/s, α_{AB}=2rad/s ^{2}, ω_{BC}=−1rad/s, and α_{BC}=−4rad/s ^{2}, what is the acceleration of point C where the scoop of the excavator is attached?

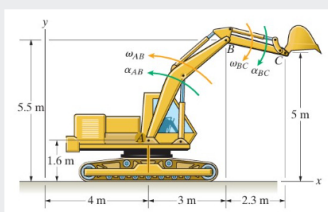

Answer

The acceleration of B is

$$a_B = a_A + \alpha_{AB} \times r_{B/A} - \omega_{AB}^2 r_{B/A}$$

$$0 + \begin{vmatrix} i & j & k \\ 0 & 0 & 2 \\ 3 & 3.9 & 0 \end{vmatrix} - 2^(3i + 3.9j)$$

$$= -19.8i - 9.6j \text{ m/s}^2$$

$$a_C = a_B + \alpha_{BC} \times r_{C/B} - \omega_{BC}^2 r_{C/B}$$

$$-19.8i - 9.6j + \begin{vmatrix} i & j & k \\ 0 & 0 & -4 \\ 2.3 & -0.5 & 0 \end{vmatrix} - 1^2(2.3i - 0.5j)$$

$$= -24.1i - 18.3j \text{ m/s}^2$$

Question 5

The length of the bar is L = 4 m and the angle θ = 30°. The bar's angular velocity is ω = 1.8 rad/s and its angular acceleration is α = 6 rad/s ^{2}. The endpoints of the bar slide on the plane surfaces. Determine the acceleration of the midpoint G.

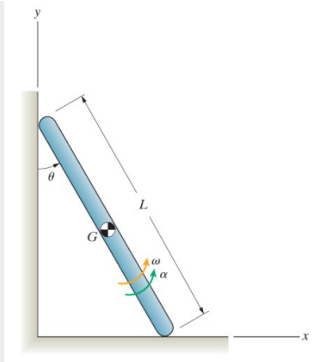

Answer

Drawing and labelling the situation calling the top point A and bottom B

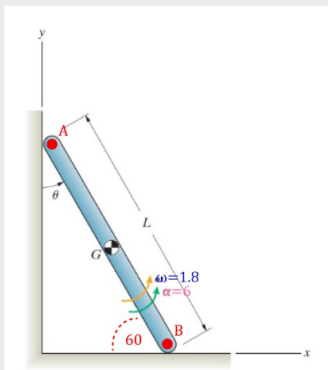

Solve, taking into account the constraints of the movements imparted by the walls and floor

$$a_A = a_B + \alpha \times r_{A/B} - \omega^2 r_{A/B}$$

$$= a_B + \begin{vmatrix} i & j & k \\ 0 & 0 & 6 \\ -4\cos(60) & 4\sin(60) & 0 \end{vmatrix} - 1.8^2(-4\cos(60)i + 4\sin(60)j)$$

$$a_A j = a_B i - 14.28i - 23.21j$$

Equating components

$$(i)0 = a_B - 14.28 \rightarrow a_B = 14.28 \text{ m/s}^2$$

$$(j)a_A = -23.21 \rightarrow a_A = -23.21 \text{ m/s}^2$$

Now we can use either points to work out G

$$a_G = a_A + \alpha \times r_{G/A} - \omega^2 r_{G/A}$$

$$a_G = -23.21j + \begin{vmatrix} i & j & k \\ 0 & 0 & 6 \\ 2\cos(60) & -2\sin(60) & 0 \end{vmatrix} - 1.8^2(2\cos(60)i - 2\sin(60)j)$$

$$a_G = 7.15i - 11.6 \text{ m/s}^2$$

Question 6

The angular velocity's magnitude ω_{AB} = 6 rad/s. If the acceleration of the slider C is zero at the instant shown, what is the angular acceleration α_{AB}?

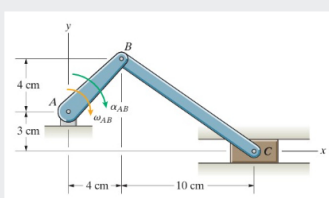

Answer

To find the acceleration, we need to know all angular velocities

$$v_B = v_A + \omega_{AB} \times r_{B/A}$$
$$= 0 + -6k \times (0.04i + 0.04j)$$
$$= 0.24i - 0.24j$$

$$v_C = v_B + \omega_{BC} \times r_{C/B}$$
$$= 0.24i - 0.24j + \omega_{BC}k \times (0.1i - 0.07j)$$
$$= (0.24 + 0.07\omega_{BC})i + (0.24 + 0.1\omega_{BC})j$$

Component analysis (remember C cannot move in i)

$$(j)0 = 0.24 + 0.1\omega_{BC} \rightarrow \omega_{BC} = -2.4 \text{ m/s}$$

From here we can find the acceleration by finding two different expressions for the movement of B; note becuase of the diagram we have put α_{AB} as negative

$$a_B = a_A + \alpha_{AB} \times r_{B/A} - \omega_{AB}^2 r_{B/A}$$
$$= 0 - \alpha_{AB} k \times (0.04i + 0.04j) - 6^2(0.04i + 0.04j)$$
$$a_B = (0.04\alpha_{AB} - 1.44)i + (-0.04\alpha_{AB} - 1.44)j$$

$$a_B = a_C + \alpha_{BC} \times r_{B/C} - \omega_{BC}^2 r_{B/C}$$
$$= 0 - \alpha_{BC} k \times (-0.1i + 0.07j) - (-2.4)^2(-0.1 + 0.07j)$$
$$a_B = (-0.07\alpha_{BC} + 0.576)i + (-0.1\alpha_{BC} - 0.4)j$$

Set components equal

$$(i) 0.04\alpha_{AB} - 1.44 = -0.07\alpha_{BC} + 0.576$$
$$0.04\alpha_{AB} + 0.07\alpha_{BC} = 2.016$$
$$(j) - 0.04\alpha_{AB} - 1.44 = -0.1\alpha_{BC} - 0.4$$
$$-0.04\alpha_{AB} + 0.1\alpha_{BC} = 1.037$$

Via simultaneous equations

$$\alpha_{AB} = 19 \text{ m/s}^2 \text{ clockwise}$$

Question 7

At the instant shown, the piston's velocity and acceleration are v_C =−14i m/s and a_C = −2200i m/s ^{2}. What is the angular acceleration of the crank AB?

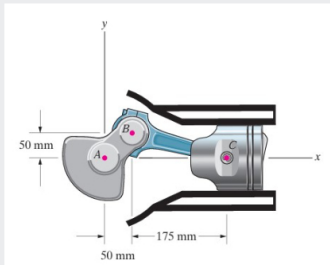

Answer

Similar to the last question, we can use the fact C can only move in i and that we need to solve for ω first

$$v_B = v_A + \omega_{AB} \times r_{B/A}$$
$$0 + \omega_{AB} k \times (0.05i + 0.05j)$$
$$= -0.05\omega_{AB} i + 0.05\omega_{AB} j$$

$$v_B = v_C + \omega_{BC} \times r_{B/C}$$
$$-14i + \omega_{BC} k \times (0.175i - 0.05j)$$
$$= -14i - 0.05\omega_{BC} i - 0.175\omega_{BC} j$$

Then analyse looking at each component of velocity

$$(i) - 0.05\omega_{AB} + 0.05\omega_{BC} = -14$$
$$(j) 0.05\omega_{AB} = -0.175\omega_{BC}$$

And using simultaneous equations

$$\omega_{AB} = 218 \text{ rad/s}, \omega_{BC} = -62.2 \text{ rad/s}$$

This time I will solve it in a slightly different way, instead of finding two expressions for a_B, finding a_B and using it as the reference point to find a_C. Both ways work so use whichever is most intuitive to you!

$$a_B = a_A + \alpha_{AB} \times r_{B/A} - \omega_{AB}^2 r_{B/A}$$
$$= 0 + \alpha_{AB} k \times (0.05i + 0.05j) - 218^2(0.05i + 0.05j)$$
$$= (-0.05\alpha_{AB} - 2376)i + (0.05\alpha_{AB} - 2376)j$$

Then using this as the reference point to find C

$$a_C = a_B + \alpha_{BC} \times r_{C/B} - \omega_{BC}^2 r_{C/B}$$
$$-2200i = (-0.05\alpha_{AB} - 2376)i + (0.05\alpha_{AB} - 2376)j + \alpha_{BC} k \times (0.175i - 0.05j) - (-62.2)^2(0.175i - 0.05j)$$
$$-2200i = (-0.05\alpha_{AB} - 2376 + 0.05\alpha_{BC} - 678)i + (0.05\alpha_{AB} - 2376 + 0.175\alpha_{BC} + 193)j$$

Equating components

$$(i) - 2200 = -0.05\alpha_{AB} + 0.05\alpha_{BC} - 3054$$
$$(j) 0 = 0.05\alpha_{AB} + 0.175\alpha_{BC} - 2183$$

Solving we find

$$\alpha_{AB} = -3580 \text{ rad/s}^2$$

Hence AB rotates 3580 rad/s ^{2} clockwise.

Question 8

If arm AB has a constant clockwise angular velocity of 0.8 rad/s, arm BC has a constant angular velocity of 0.2 rad/s, and arm CD remains vertical, what is the acceleration of part D?

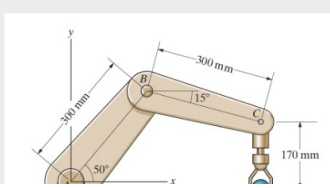

Answer

Because both AB and BC have constant angular velocity, $\alpha = 0$ for both.

Acceleration of B can be expressed as

$$\begin{aligned} a_B &= a_A + \alpha_{AB} \times r_{B/A} - \omega_{AB}^2 r_{B/A} \\ &= 0 + 0 \times (0.3\cos(50)i + 0.3\sin(50)) - 0.8^2(0.3\cos(50)i + 0.3\sin(50)j) \\ &= 0.123i - 0.147j \end{aligned}$$

Acceleration of C can be expressed as

$$\begin{aligned} a_C &= a_B + \alpha_{BC} \times r_{C/B} - \omega_{BC}^2 r_{C/B} \\ &= 0.123i - 0.147j + 0 \times (0.3\cos(15)i + 0.3\sin(15)) - 0.8^2(0.3\cos(15)i + 0.3\sin(15)j) \\ &= -0.135i - 0.144j \end{aligned}$$

Given CD remains vertical, it is just translating the same as point D

$$\alpha_C = \alpha_D = -0.135i - 0.144j \text{ m/s}^2$$

Question 9

Point A of the rolling disk is moving toward the right and accelerating toward the right. The magnitude of the velocity of point C is 2 m/s, and the magnitude of the acceleration of point C is 14 m/s ^{2}. Determine the angular acceleration of the disk.

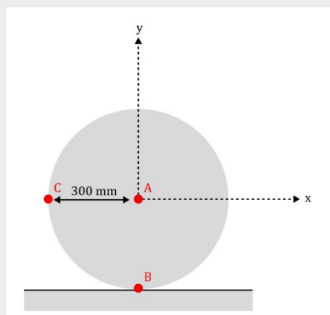

Answer

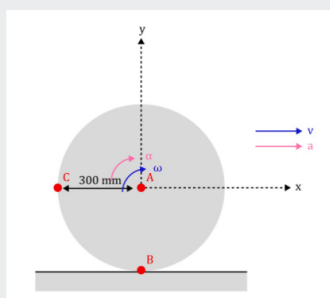

First find the velocity of the centre of the disk. because it is rolling, it only has i component, hence

$$v_a = r\omega i$$

Next find velocity of C. Intruitivley this must only have j velocity component meaning the velocity must be

$$v_C = r\omega i + r\omega j$$

But we can prove it mathematically with

$$\begin{aligned} v_C &= v_A + r \times \omega \\ &= r\omega i + \begin{vmatrix} i & j & k \\ 0 & 0 & -\omega \\ -0.3 & 0 & 0 \end{vmatrix} = r\omega i + r\omega j \end{aligned}$$

From here, we know the magnitude of velocity of C is 2 so we can calculate the angular velocity using basic absolute value vector calculations

$$\begin{aligned} 2 &= \sqrt{(r\omega)^2 + (r\omega)^2} \\ 4 &= r^2\omega^2 + r^2\omega^2 \\ 4 &= 2r^2\omega^2 \\ 4 &= 0.18\omega^2 \\ \omega &= 4.71 \text{ rad/s} \end{aligned}$$

Then use a similar method to find angular acceleration

$$\begin{aligned} a_C &= a_A + \alpha \times r_{C/A} - \omega^2 r_{C/A} \\ a_C &= 0.3\alpha i + \begin{vmatrix} i & j & k \\ 0 & 0 & -\alpha \end{vmatrix} - |4.71|^2(-0.3) \end{aligned}$$

$$|-0.3 \quad 0 \quad 0|$$
$$a_C = 0.3\alpha i + 6.66i + 0.3\alpha j$$

Now for the magnitude

$$14 = \sqrt{(0.3\alpha + 6.6)^2 + 0.3\alpha^2}$$

Expanding and solving the equation

$$\alpha = 20 \text{ m/s}^2 \text{ in the negative direction}$$

Question 10

The disk rolls on the circular surface with a constant clockwise angular velocity of 1 rad/s. What are the accelerations of points A and B?

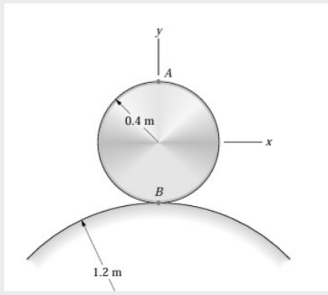

Answer

First find the acceleration of the center of the disk (call it O). There is an instantaneous center where the circle meets the ground so

$$v_B = 0$$
$$v_0 = v_B + \omega k \times r_{O/B} = -1k \times 0.4j$$
$$v_O = 0.4i$$

The speed of the disk along the circular path is not changing. Remember O is moving on a circular path with radius 1.6 m total. We can use the normal acceleration formula from the centre of the system.

$$a_O = \frac{v_O^2}{r} = \frac{-0.16}{0.4 + 1.2}$$
$$= -0.1 \text{ m/s}^2 \text{ in the j direction}$$

We don't use $a_n = r\omega$ in this situation as this is used for calculating normal acceleration at the rim due to a disk's angular velocity (essentially projecting a different frame and center) whereas we are finding simply the linear velocity along a circular path.

Then A can be found with

$$a_A = a_O + \alpha \times r_{A/O} - \omega^2 r_{A/O}$$
$$a_A = -0.1j + 0 - 1^2(0.4j)$$
$$a_A = -0.5j \text{ m/s}^2$$

And B

$$a_B = a_O + \alpha \times r_{B/O} - \omega^2 r_{B/O}$$
$$a_A = -0.1j + 0 - 1^2(-0.4j)$$
$$a_A = 0.3j \text{ m/s}^2$$