Study Questions for Lectures on Inheritance

This study guide provides examples for the types of questions that you might see on the first term from the lectures over DNA, Mendelian inheritance, and complex inheritance. This is NOT an exhaustive list of all content that might be covered on the exam. Use your notes from lecture and the lecture slides and audio on Canvas to know what all topics have been covered.

1. A diploid cell of yeast has 32 chromosomes. How many chromosomes are in each of its haploid spores?
    a. 32
    b. 16
    c. 8
    d. 64

2. A human female has _____ chromosomes in each skin cell and _____ chromosomes in each egg.
    a. 46; 46
    b. 23; 46
    c. 46; 23
    d. 23;23
    e. 92; 46

3. What is the final product of gene expression?
    a. A DNA molecule
    b. An RNA molecule
    c. A protein
    d. A ribosome
    e. An amino acid

4. What is the product of transcription?
    a. A gene
    b. A protein
    c. RNA
    d. A chromosome
    e. RNA polymerase

5. A woman is heterozygous for a gene with two alleles, *A* and *a*. Assuming that meiosis occurs normally, which of the following represent eggs that she can produce? *Select all that apply*
    a. A
    b. a
    c. Aa
    d. AA
    e. aa

First letter	Second letter: U	Second letter: C	Second letter: A	Second letter: G	Third letter
U	UUU, UUC: Phenylalanine (Phe) UUA, UUG: Leucine (Leu)	UCU, UCC, UCA, UCG: Serine (Ser)	UAU, UAC: Tyrosine (Tyr) UAA, UAG: Stop codon, Stop codon	UGU, UGC: Cysteine (Cys) UGA: Stop codon UGG: Tryptophan (Trp)	U C A G
C	CUU, CUC, CUA, CUG: Leucine (Leu)	CCU, CCC, CCA, CCG: Proline (Pro)	CAU, CAC: Histidine (His) CAA, CAG: Glutamine (Gln)	CGU, CGC, CGA, CGG: Arginine (Arg)	U C A G
A	AUU, AUC, AUA: Isoleucine (Iso) AUG: Methionine (Met); start codon	ACU, ACC, ACA, ACG: Threonine (Thr)	AAU, AAC: Asparagine (Asn) AAA, AAG: Lysine (Lys)	AGU, AGC: Serine (Ser) AGA, AGG: Arginine (Arg)	U C A G
G	GUU, GUC, GUA, GUG: Valine (Val)	GCU, GCC, GCA, GCG: Alanine (Ala)	GAU, GAC: Aspartic acid (Asp) GAA, GAG: Glutamic acid (Glu)	GGU, GGC, GGA, GGG: Glycine (Gly)	U C A G

6. Use the table above to determine which of the 20 amino acids fall into each category. "Wobble" pairings occur when multiple codons produce the same amino acid. For example, UUU and UUC both code for Phenylalanine, so we would say these codons have wobble pairing in the third codon position (the third position can 'wobble' between U and C and produce the same amino acid).
   a. Which amino acids are coded for by only one codon?

   b. Which amino acids have wobble pairings in the third codon position?

   c. Which amino acids have wobble pairings in the second codon position?

   d. Which amino acids have wobble pairings in the first codon position?

   e. Which amino acid could have substitution mutations in all three positions of the codon and still produce the same amino acid?

   f. It is hypothesized that wobble evolved in order to protect the DNA from harmful effects of mutations. If that hypothesis is correct, which codon position (1st, 2nd, or 3rd) would you predict has the highest rate of mutation?

7. For each gene below, use the codon table to determine the amino acid chain that will be produced by transcription and translation

GENE 1

DNA sense strand **ATG TCA CAT TTT GAC TGG CGT CTC GAA TAG**
DNA anti-sense strand **TAC AGT GTA AAA CTG ACC GCA GAG CTT ATC**

mRNA strand

amino acid chain

GENE 2

DNA sense strand **ATG AAA CCC GGG TTT ATT CTT AAC AGA CGT CCG ATA TAA**
DNA anti-sense strand **TAC TTT GGG CCC AAA TAA GAA TTG TCT GCA GGC TAT ATT**

mRNA strand

amino acid chain

GENE 3

DNA sense strand **ATG GTT ATT GAG ACT TTG CAG CGA CGT AGA TAC AAT TGA**
DNA anti-sense strand **TAC CAA TAA CTC TGA AAC GTC GCT GCA TCT ATG TTA ACT**

mRNA strand

amino acid chain

8. For the following questions, refer to Gene 3 in the question above.

   a. What substitution mutation in Gene 3 above would produce the following amino acid chain?

      Met, Val, Iso, Glu, Thr, Trp, Gln, Arg, Arg, Arg, Tyr, Asn, (stop)

   b. What substitution mutation in Gene 3 above would produce the following amino acid chain? What frameshift mutation would have the same effect?

      Met, Val, Iso, (stop)

9. Which of the following would **not** be likely to produce phenotypic variation? *select all that apply*
    a. Differences in the amount of mRNA transcription for a pigment gene in birds
    b. A synonymous mutation in the gene controlling horn formation in horned beetles
    c. A mutation that changes the folding pattern for a protein important to immune function in wasps
    d. A deletion causing the removal of several whole genes in a population of grasses
    e. In a human population, a mutation in a region of the genome that does not contain any genes

10. You are interested in two genes in seahorses. The first determines whether there is a spotting pattern, where individuals with the dominant R allele are spotted and rr individuals are plain. The second gene determines color, where individuals with the dominant G allele are bright green and gg individuals are dull green. You breed two heterozygous individuals expecting to get all possible combinations of color and pattern. Out of 1000 offspring, nearly all are bright green with spots (R_G_) or dull green and plain (rrgg). Only 2% of offspring are bright green plain (R_gg) or dull green spotted (rrG_). Which of the following is a likely explanation for this phenomenon:
    a. The two genes are on different chromosomes
    b. The two genes are very close together on the same chromosome
    c. The two genes are very far apart on the same chromosome
    d. The traits are not actually genetic

11. Match each scenario with the type of inheritance it describes. Options are codominance, incomplete dominance, simple dominance, pleiotropy, environmental effects on phenotype, polygenic inheritance, and epistasis.
    a. At a gene in horses, homozygous dominant individuals are brown, homozygous recessive individuals are white, and heterozygous individuals have brown and white spots
    b. At a gene in bison, homozygous dominant individuals have straight beards, homozygous recessive individuals have curly beards, and heterozygous individuals have wavy beards
    c. At a gene in geckos, homozygous dominant and heterozygous individuals have red splotches on their back, homozygous recessive individuals have blue splotches on their back
    d. At a gene in butterflies, homozygous recessive individuals have shorter antennae and fewer spots on their wings than heterozygous or homozygous dominant individuals
    e. In bunnies, coat color is controlled by a single gene that produces a black pigment. This pigment degrades at temperatures near the bunny's average body temperature and so most of the bunny is white. Parts of the bunny's body that are cooler (the tips of the ears, toes, tail, and nose) accumulate some pigment and are gray.
    f. In humans, eye color is controlled by several genes; more dominant alleles across all the genes produce darker eye colors and fewer dominant alleles produce lighter eye colors.
    g. At a gene in fescue grass, homozygous dominant and heterozygous individuals produce brown seed pods, while homozygous recessive individuals produce black seed pods, so long as their genotype at a second gene is also homozygous dominant or heterozygous. If the genotype at the second gene is homozygous recessive, however, no pigment is produced and the seed pods are white.

12. What is the difference between genotype and phenotype?

13. What is the difference between heterozygous and homozygous?

    a. If you know purple flower color is dominant over white flower color, is a white flower heterozygous or homozygous? Explain your answer.

    b. If you know purple flower color is dominant over white flower color, is a purple flower heterozygous or homozygous? Explain your answer.

14. How do each of the following contribute to genetic diversity in a population? Why is genetic diversity important?
    a. Sexual reproduction
    b. Independent assortment
    c. Recombination

15. In squash, white flower color (allele *R*) is dominant over yellow flower color (allele *r*). Draw a Punnett Square demonstrating each cross. Include the **genotype and phenotype** of the offspring. Note: the x in each line stands for 'crossed with'
    a. *RR* x *rr* b. *Rr* x *rr* c. *Rr* x *Rr*

16. For each example below, complete a Punnett Square for the cross described. If letters denoting the allele are not provided, choose your own letters to represent each allele. All traits show complete dominance. Make sure to provide the **genotypes and phenotypes** of the offspring.
    a. A tall plant (*TT*) is crossed with a short plant (*tt*)

    b. A green pea (*Gg*) is crossed with a yellow pea (*gg*)

    c. A homozygous recessive tan mouse is crossed with a homozygous dominant brown mouse

    d. Two heterozygous white rabbits mate (brown is the recessive color).

17. Many animals and plants bear recessive alleles for albinism, a condition in which homozygous individuals completely lack any pigments. If two normally-pigmented persons heterozygous for the albinism allele mate, what percentage of their offspring would you expect to be albino?

18. You cross a plant with red flowers and a plant with white flowers, expecting to get some red-flowered plants and some white-flowered plants. Instead, you get all pink-flowered plants. What happened? What were the genotypes of the initial plants?

19. In tomatoes, the texture of the skin may be smooth or 'hairy' (like a peach). You cross a hairy-fruited plant with a smooth-fruited plant and produce an F1 generation of all smooth-fruited plants. A cross between these F1 offspring produces an F2 generation of 174 hairy fruited plants and 520 smooth fruited plants. Which phenotype is dominant? What were the genotypes of the initial parents?

20. A brown mink is crossed with a silverblue mink, and all the offspring are brown. When these F_1 brown minks mate, they produce 47 brown offspring and 15 silverblue offspring. Determine the genotypes of the original brown and silverblue mink, the genotypes of the F_1 generation and the genotypes of the F_2 generation. What fraction of the F_2 individuals would you expect to be homozygous?

21. In pea plants, tall stems are dominant to short stems, and purple flower color is dominant to white flower color.

    a. If a homozygous tall, white plant is crossed with a homozygous short, purple plant, what will be the phenotype of the F_1 generation?
    b. If an F_1 plant from this cross is then crossed with to a homozygous tall white plant, what will be the possible phenotypes of the offspring, and in what expected proportions?

22. Two plants that are heterozygous for seed color (yellow is dominant, green is recessive) and seed texture (smooth is dominant, wrinkled is recessive) are crossed. (*Hint: this is called a dihybrid cross, you will need a large Punnett Square, refer to Fig 12.4 in the textbook for assistance*).

    a. What percentage of the offspring would you expect to have smooth green seeds?
    b. What percentage of the offspring would you expect to have wrinkled yellow seeds?
    c. What percentage of their offspring would you expect to be heterozygous for both traits?

23. In a certain type of flower, the dominant color is blue (*B*) and the recessive color is red (*b*). Two heterozygote blue flowers are crossed.

    a. What are the potential **genotypes** of this cross?
    b. What are the potential **phenotypes** of this cross if this trait exhibits simple dominance?
    c. What are the potential **phenotypes** of this cross if this trait exhibits co-dominance?
    d. What are the potential **phenotypes** of this cross if this trait exhibits intermediate dominance?

24. Flower color in the blue-eyed Mary (*Collinsia parviflora*) is controlled by two separate genes. The first controls the color of pigment and is called the 'blue' gene. The dominant allele (*B*) produces blue flowers, while recessive alleles (*b*) produces magenta flowers. This trait exhibits simple dominance, so heterozygote plants (*Bb*) also have blue flowers. The second gene, called the 'white' gene, produces a compound that is required for the pigment of the *B* gene to be produced correctly. This trait also exhibits simple dominance, so flowers with genotype *FF* or *Ff* will exhibit whatever flower color is indicated by the blue gene. Plants that are homozygous recessive (*ff*), however, will exhibit no pigmentation in their petals and will produce only white flowers regardless of their genotype at the blue gene.

    What flower color will each genotype listed below produce?

    a. *BBFF*
    b. *Bbff*
    c. *BbFf*
    d. *bbFf*
    e. You own a white flowered-plant and a magenta-flowered plant. Crosses between your two plants always produce blue-flowered plants. What are the genotypes of the parent plants? What are the genotypes of the offspring?

25. Blood type in humans is controlled by two genes, one which controls 'type' (A, B, or O) and the other which controls Rh factor (positive or negative). At the first gene, the A and B alleles exhibit complete dominance over the O allele, and the A and B alleles exhibit codominance with each other. At the second gene, the Rh-positive allele (+) exhibits complete dominance over the Rh-negative allele (-). In the table below, fill in the phenotype (blood type) for each genotype. **For example**, the genotype BO+/- has a B allele and an O allele at the first gene; an Rh-positive allele and an Rh-negative allele at the second gene, which results in the blood type B-positive.

Genotype	**AA+/+**	**AB+/-**	**AB+/+**	**OO-/-**	**AO+/-**	**BO-/-**	**BB+/-**	**AB-/-**
Phenotype								

26. Two parents believe their baby was switched at the hospital with someone else's child. The parents have blood types A-positive and B-positive, and the baby has blood type O-negative. Do the blood types indicate this baby does not belong to these parents?

<u>Sex-Linked Inheritance</u>

27. In humans, a single gene found on the X chromosome controls for the disease hemophilia. Individuals with hemophilia lack a protein required for clotting blood. When injured, hemophiliacs bleed excessively, and may even bleed to death after relatively minor cuts or bruises. The hemophilia gene has two alleles, *H* and *h*. The trait exhibits simple dominance, with the dominant phenotype of normal protein production (X^H) and the recessive phenotype of hemophilia (X^h). In the table below, indicate the sex of each patient, and whether he or she is healthy, a carrier (carries the hemophiliac gene, but does not suffer from the disease), or a hemophiliac.

Genotype	**Sex**	**Disease Status** (healthy, carrier, or hemophiliac)
X^HX^H		
X^HY		
X^hX^h		
X^hY		
X^HX^h		

28. Show the cross of a man who has hemophilia and a woman who is a carrier. What is the probability that their children will have the disease? How does that probability change with the sex of the child?

29. A woman who is a carrier of hemophilia has children with a non-hemophilliac man. Show the cross and determine the probability that their children will have hemophilia. What sex will any hemophiliac children be?

30. A woman who has hemophilia has children with a non-hemophiliac man. Show the cross and determine how many of their children you would expect to have hemophilia and what the sex of the hemophiliac children will be.

31. Why are X-linked recessive diseases more common in men than women?

32. If a man has an X-linked disease, what proportion of his sons would you expect to inherit that disease from him? Explain your answer

33. In fruit flies, eye color is a sex linked trait. Red (X^R) is dominant to white (X^r)

    a. What are the sexes and eye colors of flies with the following genotypes:

$X^R X^r$ _____ $X^R Y$ _____

$X^R X^R$ _____ $X^r Y$ _____

    b. What are the genotypes of the following fly phenotypes (*NOTE: there may be more than one possible genotype*):

white eyed, male _____ red eyed female _____

white eyed, female _____ red eyed, male _____

34. Draw the potential results of a cross between a white eyed female fly with a red-eyed male.
    a. What percentage of the male offspring would you expect to have red eyes? Explain your answer
    b. What percentage of the female offspring would you expect to have white eyes? Explain your answer.

<u>Pedigrees</u>

35. The pedigree below shows the passing on of straight thumbs (recessive) and Hitchhiker's thumb (dominant). Shaded shapes mean the person has a straight thumb. Hitchhiker's thumb is **<u>NOT</u>** an X-linked trait

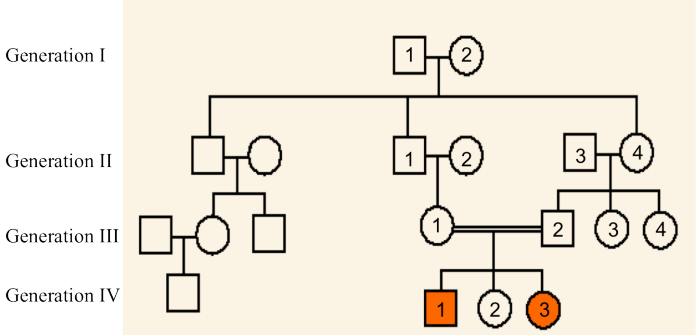

    a. Is individual IV-2 heterozygous or homozygous for this trait? Explain your answer.
    b. Why is there a double line (as opposed to a single line) between individuals III-1 and III-2? (*Hint: what is different about this pairing than the other matings shown on the pedigree, represented by a single line)*
    c. In this pedigree, straight thumbs is not a very common phenotype. Propose an explanation for why the only individuals on this pedigree that have the recessive phenotype are the offspring of III-1 and III-2 and not any of the other matings shown on the pedigree

36. Domestication of animals frequently results in predictable changes in physical traits that are not directly being selected; examples include floppy ears, short/curly tails, white face markings, curly hair, etc. Describe two genetic mechanisms that might explain why these traits are consistently more common in domesticated animals than their wild relatives.

37. The pedigree below shows the inheritance of alkaptonuria, a biochemical disorder. This is NOT an X-linked trait. Males are shown with boxes and females with circles, purple shapes represent individuals with alkaptonuria.

    a. Is this condition caused by a dominant allele or a recessive allele? Provide evidence from the pedigree to support your answer.
    b. Which individuals' genotypes can be deduced from this pedigree? Label all the persons whose genotype can be determined. Which individuals' genotypes cannot be determined?

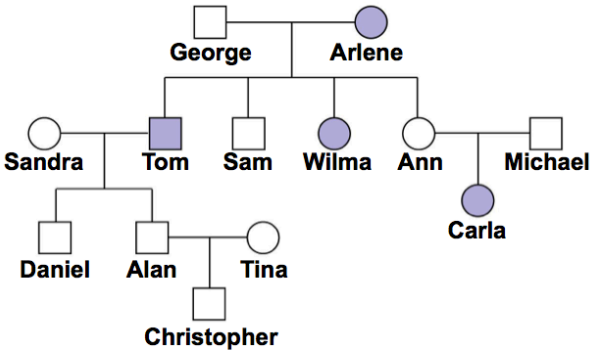

Linkage Mapping

38. You have isolated three new recessive mutations in Drosophila: green-eye (g), fuzzball (f), and crooked wing (c). You cross homozygous parents to create several heterozygous F1s with genotype GgFf, GgCc, and GgFfCc. A GgFf x ggff cross reveals the following gamete frequencies: 39% GF, 11% Gf, 9% gF, and 41% gf. A GgCc x ggcc cross reveals gamete frequencies of 49% GC, 2% Gc, 2% gC, and 47% gc.

    Do these crosses suggest that the F and C genes are linked? Explain your answer

39. You are studying four recessive mutations in Drosophila: little wing (l), maroon body pigment (m), giant antennae (g), and big eye (b). You cross homozygous parents to create several heterozygous F1s with genotype LlMm, LlGg and MmGg. Crosses between the F1 individuals and homozygous recessive individuals (ex: LlMm x llmm) indicate gamete production in the following frequencies:

Gamete	Freq
LM	0.37
lm	0.36
lM	0.13
Lm	0.14

Gamete	Freq
LG	0.26
lg	0.24
lG	0.27
Lg	0.23

Gamete	Freq
GB	0.47
gb	0.45
gB	0.03
Gb	0.05

    a. Which of the four genes you are studying are linked?

    b. Of the genes that are linked, which are closest together on the chromosome?

    c. Given these gamete frequencies, what would you predict to be the frequency of offspring that are *GgBb*?

    d. Given these gamete frequencies, what would you predict to be the frequency of offspring that have normal antennae (not giant) and normal eyes (not big)?