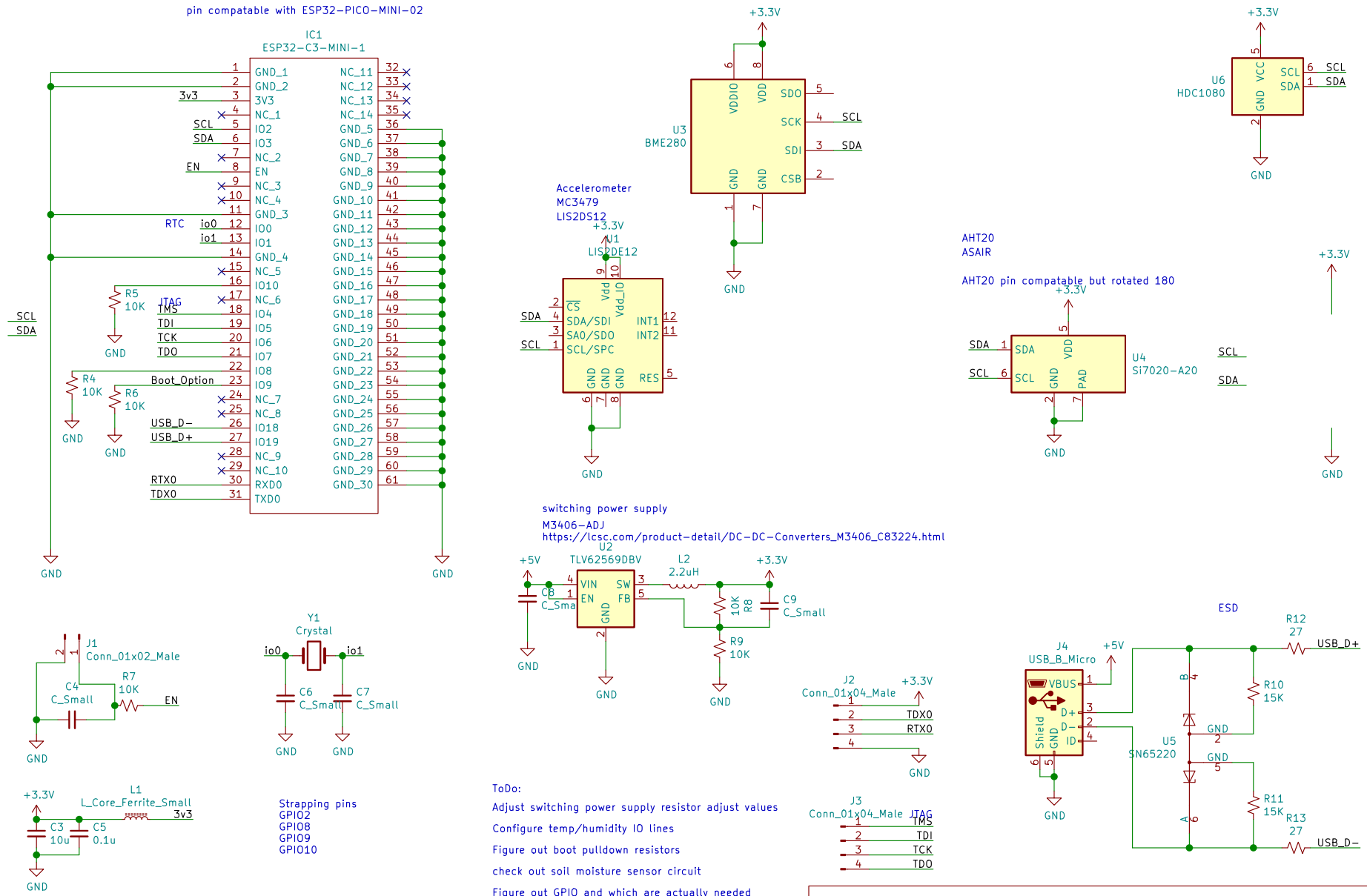

Juniper Garden

Sheet: /

File: temp sensor.sch

Title: Soil Moisture Temp Humidity Pressure IMU

Size: A	Date: 2021-04-24	**Rev: 0.1**
KiCad E.D.A. kicad (5.1.6)-1		Id: 1/1