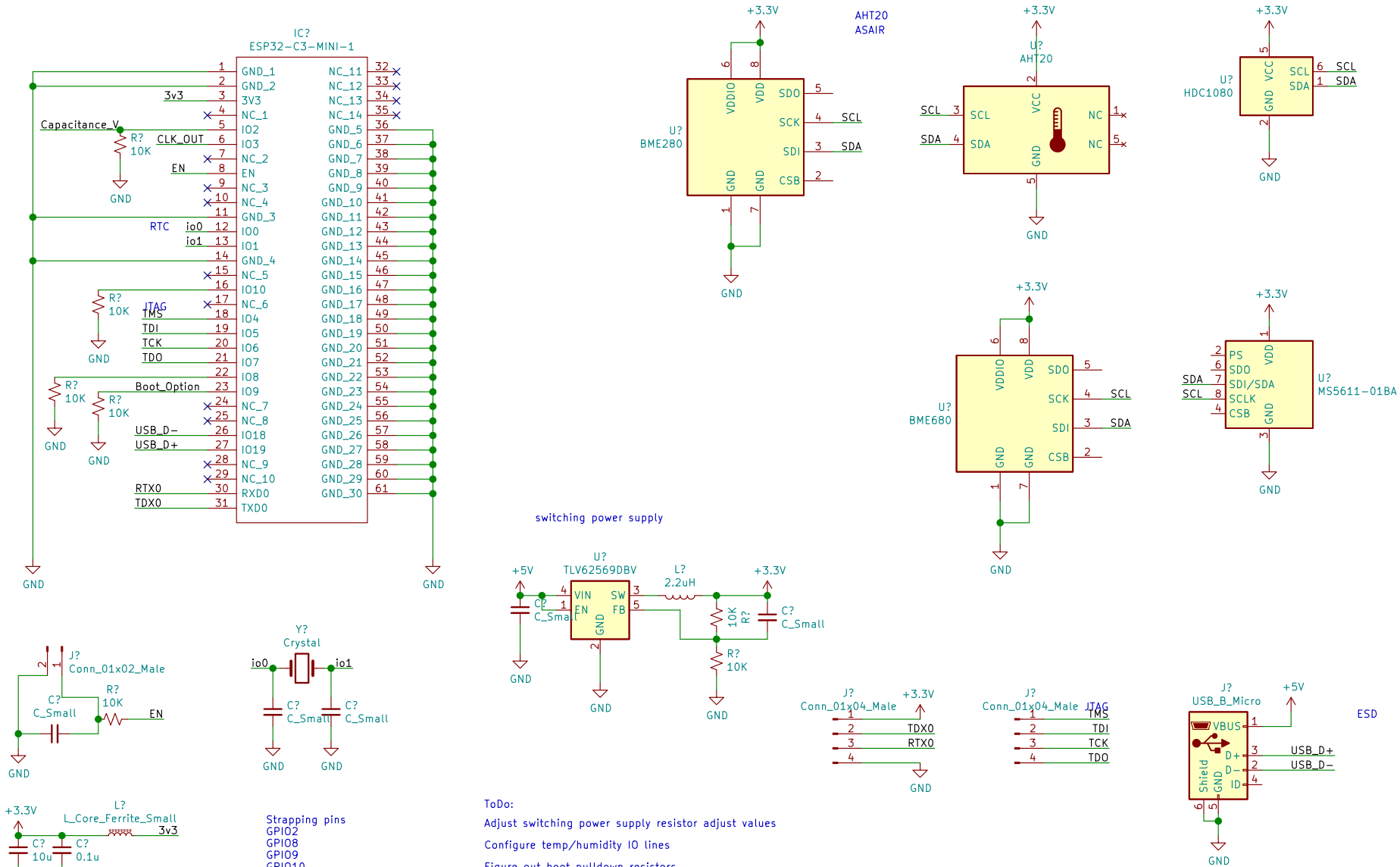
IC?
ESP32-C3-MINI-1
GND_1 1
GND_2 2
3V3 3
NC_1 4
IO2 5
IO3 6
NC_2 7
EN 8
NC_3 9
NC_4 10
GND_3 11
IO0 12
IO1 13
GND_4 14
NC_5 15
IO10 16
NC_6 17
IO4 18
IO5 19
IO6 20
IO7 21
IO8 22
IO9 23
NC_7 24
NC_8 25
IO18 26
IO19 27
NC_9 28
NC_10 29
RXD0 30
TXD0 31
NC_11 32
NC_12 33
NC_13 34
NC_14 35
GND_5 36
GND_6 37
GND_7 38
GND_8 39
GND_9 40
GND_10 41
GND_11 42
GND_12 43
GND_13 44
GND_14 45
GND_15 46
GND_16 47
GND_17 48
GND_18 49
GND_19 50
GND_20 51
GND_21 52
GND_22 53
GND_23 54
GND_24 55
GND_25 56
GND_26 57
GND_27 58
GND_28 59
GND_29 60
GND_30 61
Capacitance_V
R? 10K
CLK_OUT
EN
RTC
io0
io1
JTAG
TMS
TDI
TCK
TDO
Boot_Option
USB_D-
USB_D+
RTX0
TDX0
GND
+3.3V
AHT20
ASAIR
U? BME280
VDDIO
VDD
SDO
SCK
SDI
CSB
SCL
SDA
U? AHT20
VCC
NC
U? HDC1080
U? BME680
U? MS5611-01BA
PS
SDO/SDA
SCLK
switching power supply
+5V
U? TLV62569DBV
VIN
EN
SW
FB
L? 2.2uH
C? C_Small
J? Conn_01x02_Male
Y? Crystal
L? L_Core_Ferrite_Small
3v3
C? 10u
C? 0.1u
Strapping pins
GPIO2
GPIO8
GPIO9
GPIO10
D? D
R? 510K
C? 1u
C? sensor track
J? Conn_01x04_Male
J? USB_B_Micro
VBUS
D+
D-
ID
Shield
ESD
ToDo:
Adjust switching power supply resistor adjust values
Configure temp/humidity IO lines
Figure out boot pulldown resistors
check out soil moisture sensor circuit
Figure out GPIO and which are actually needed
Prototype USB interface, confirm it works
Juniper Garden
Sheet: /
File: temp sensor.sch
Title: Soil Moisture Temp Humidity Pressure IMU
Size: A
Date: 2021-04-24
Rev: 0.1
KiCad E.D.A. eeschema (5.1.6)-1
Id: 1/1