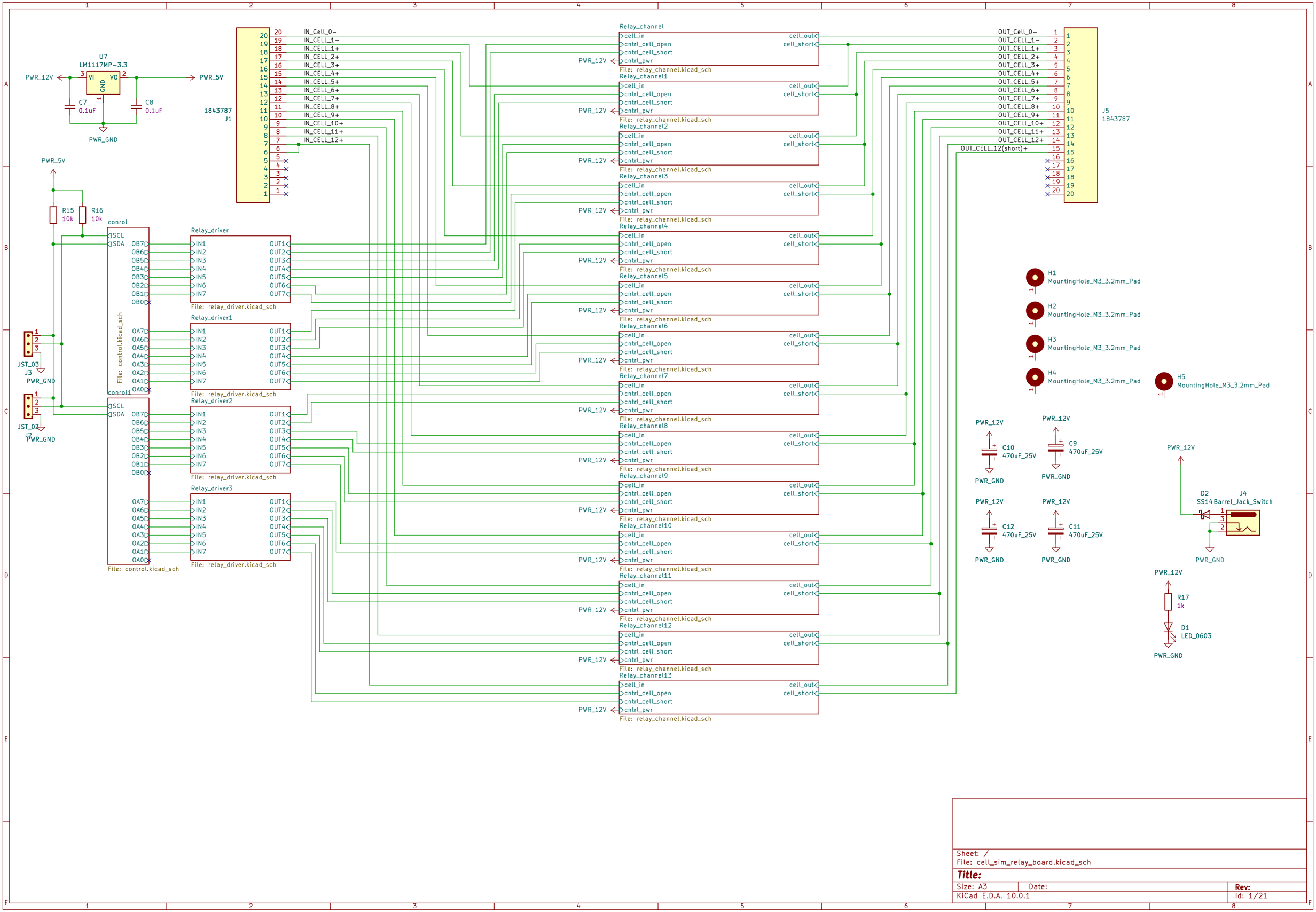

Sheet: /
File: cell_sim_relay_board.kicad_sch

Title:

Size: A3	Date:	Rev:
KiCad E.D.A. 10.0.1		Id: 1/21

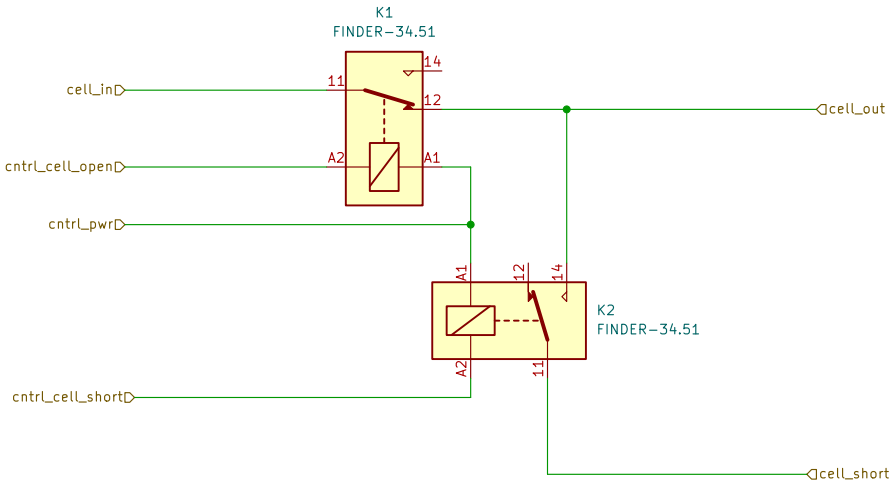

Sheet: /Relay_channel/
File: relay_channel.kicad_sch

Title:

Size: A4	Date:	Rev:
KiCad E.D.A. 10.0.1		Id: 2/21

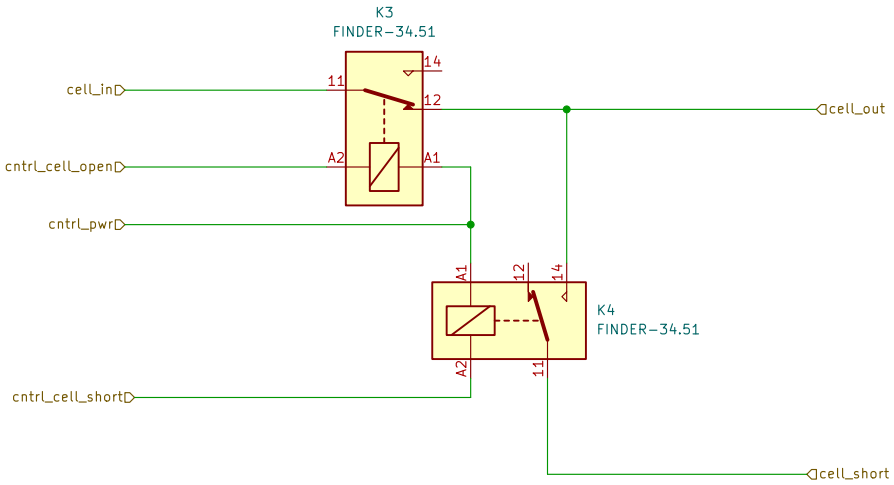

Sheet: /Relay_channel1/
File: relay_channel.kicad_sch

Title:

Size: A4	Date:	**Rev:**
KiCad E.D.A. 10.0.1		Id: 3/21

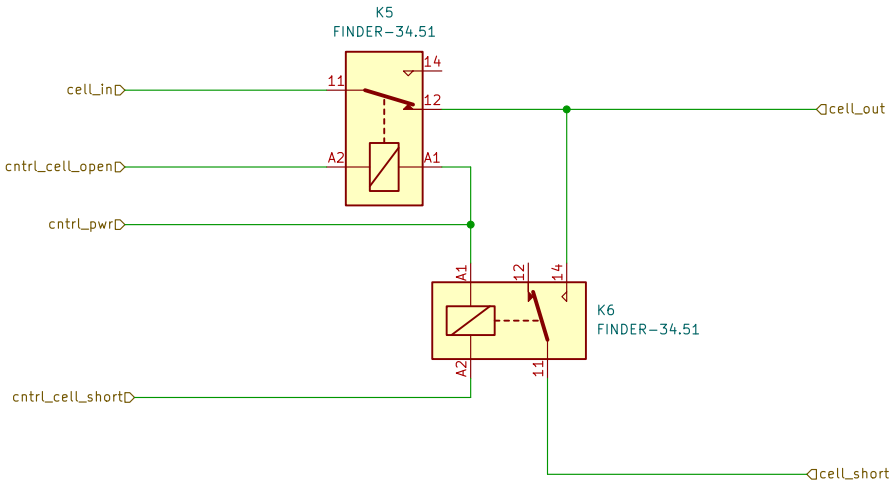

Sheet: /Relay_channel2/
File: relay_channel.kicad_sch

Title:

Size: A4	Date:	Rev:
KiCad E.D.A. 10.0.1		Id: 4/21

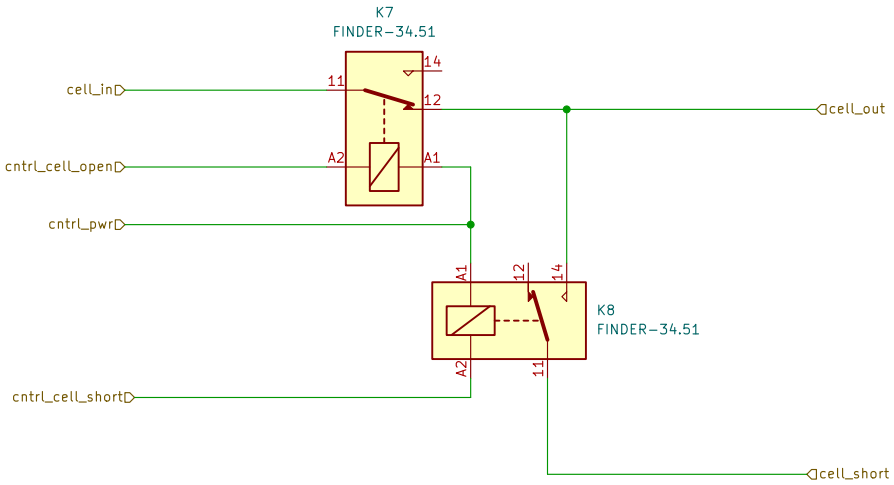

Sheet: /Relay_channel3/
File: relay_channel.kicad_sch

Title:

Size: A4	Date:	**Rev:**
KiCad E.D.A. 10.0.1		Id: 5/21

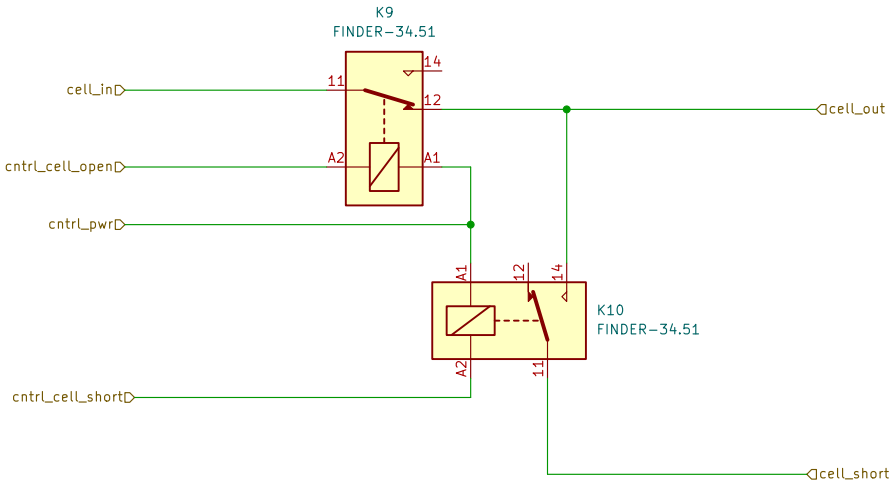

Sheet: /Relay_channel4/
File: relay_channel.kicad_sch

Title:

Size: A4	Date:	**Rev:**
KiCad E.D.A. 10.0.1		Id: 6/21

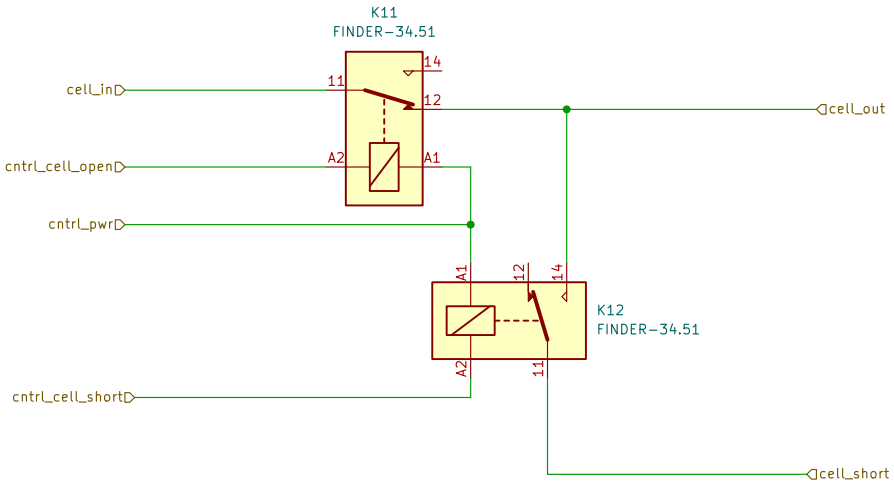

Sheet: /Relay_channel5/
File: relay_channel.kicad_sch

Title:

Size: A4	Date:	**Rev:**
KiCad E.D.A. 10.0.1		Id: 7/21

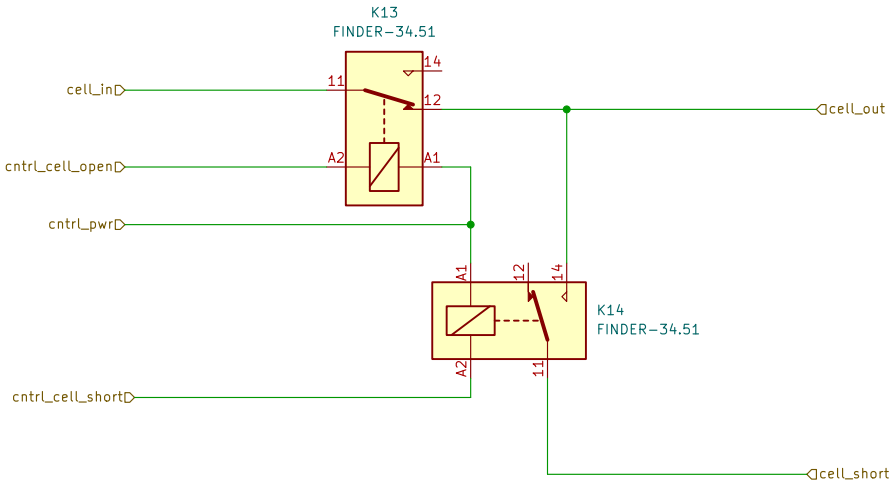

Sheet: /Relay_channel6/
File: relay_channel.kicad_sch

Title:

Size: A4	Date:	**Rev:**
KiCad E.D.A. 10.0.1		Id: 8/21

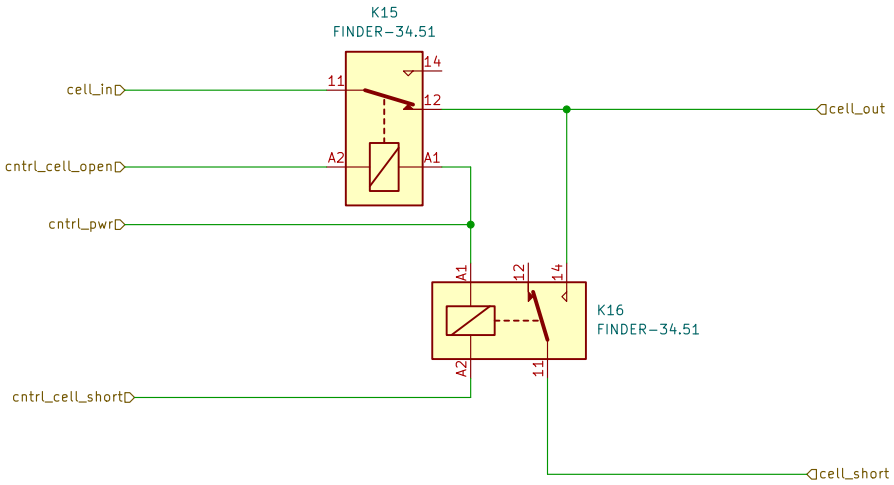

Sheet: /Relay_channel7/
File: relay_channel.kicad_sch

Title:

Size: A4	Date:	**Rev:**
KiCad E.D.A. 10.0.1		Id: 9/21

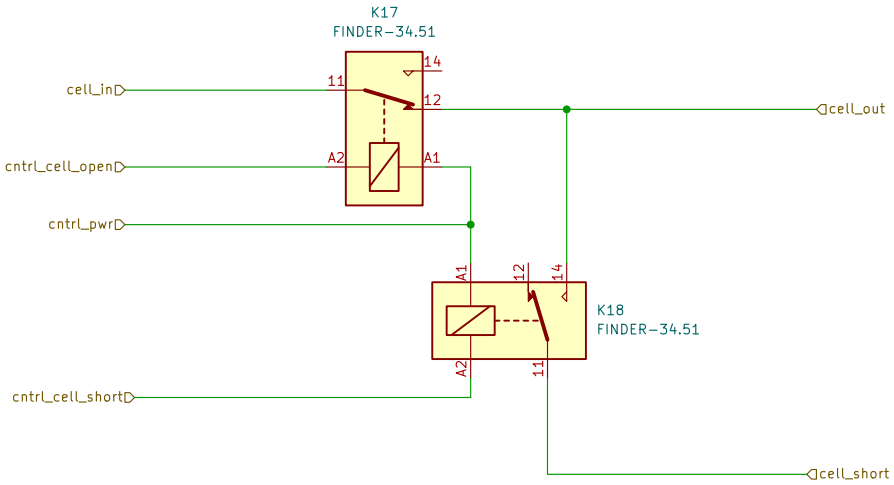

Sheet: /Relay_channel8/
File: relay_channel.kicad_sch

Title:

Size: A4	Date:	**Rev:**
KiCad E.D.A. 10.0.1		Id: 10/21

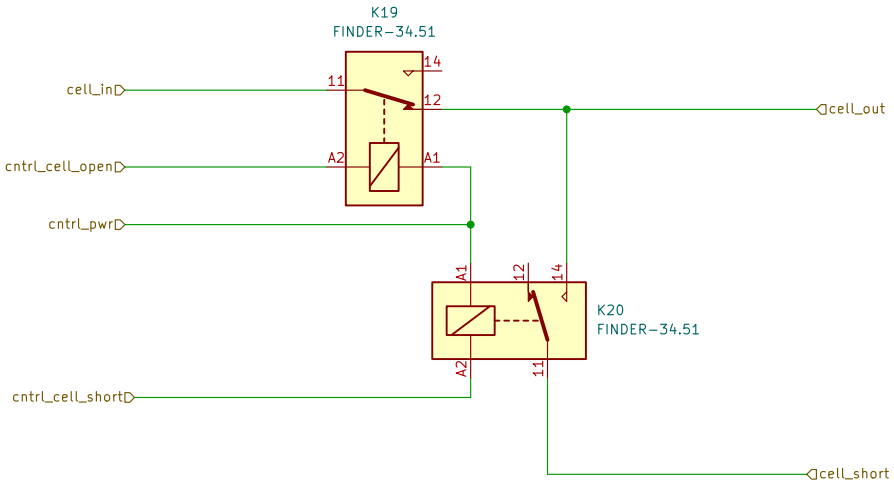

Sheet: /Relay_channel9/
File: relay_channel.kicad_sch

Title:

Size: A4	Date:	**Rev:**
KiCad E.D.A. 10.0.1		Id: 11/21

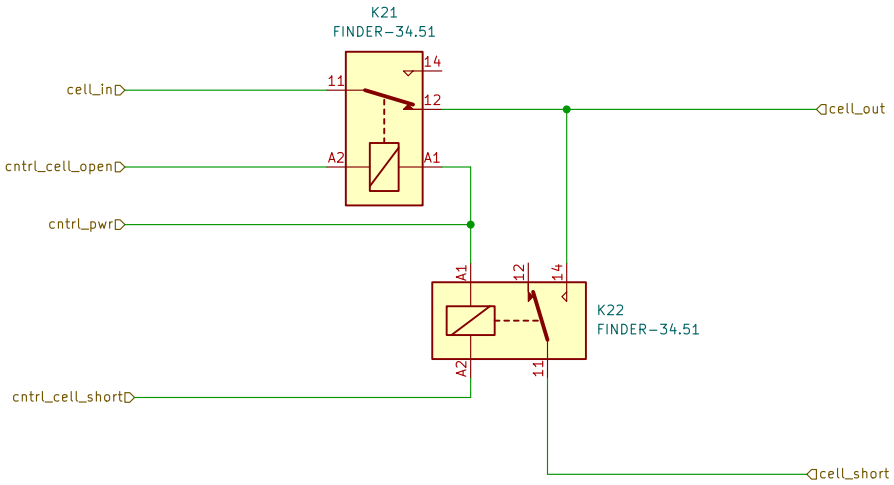

Sheet: /Relay_channel10/
File: relay_channel.kicad_sch

Title:

Size: A4	Date:	**Rev:**
KiCad E.D.A. 10.0.1		Id: 12/21

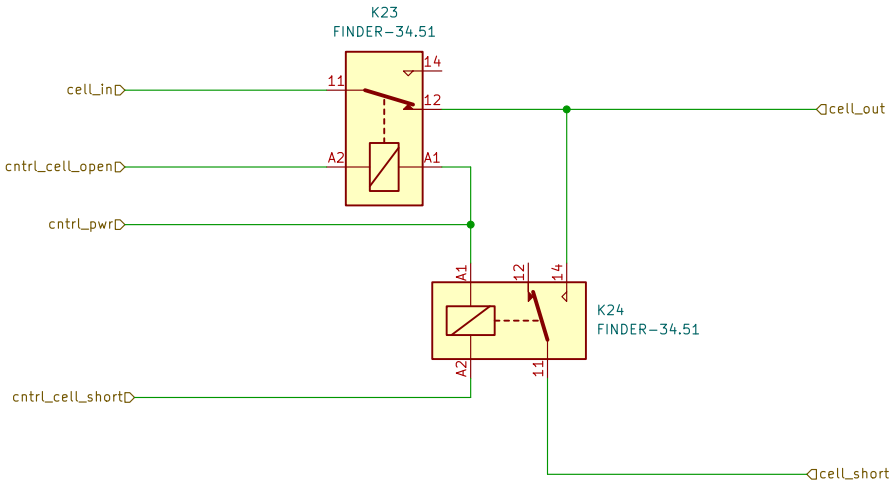

Sheet: /Relay_channel11/
File: relay_channel.kicad_sch

Title:

Size: A4	Date:	**Rev:**
KiCad E.D.A. 10.0.1		Id: 13/21

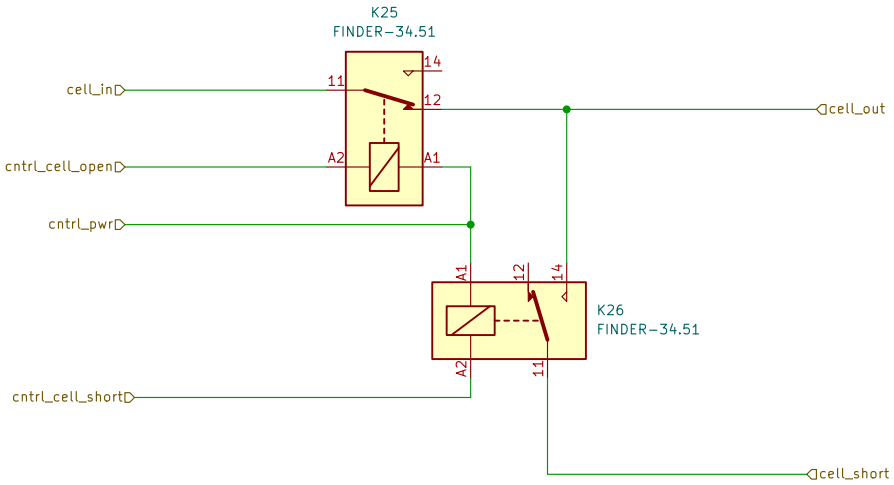

Sheet: /Relay_channel12/
File: relay_channel.kicad_sch

Title:

Size: A4	Date:	**Rev:**
KiCad E.D.A. 10.0.1		Id: 14/21

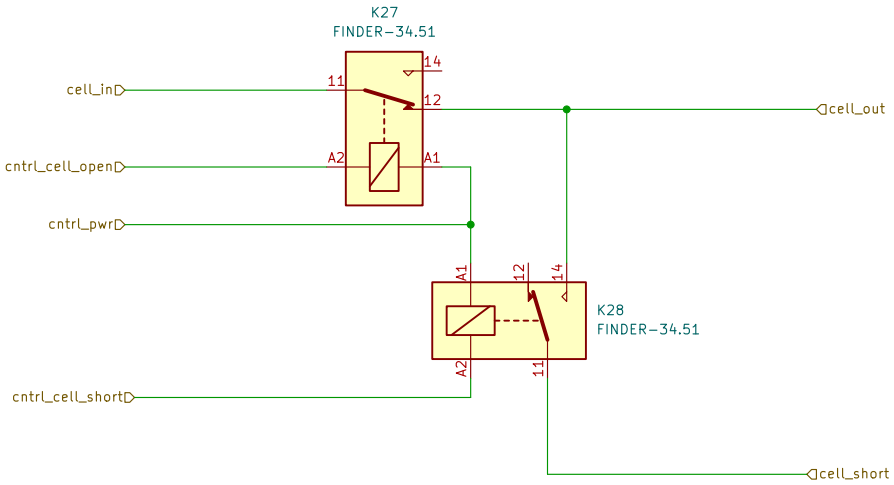

Sheet: /Relay_channel13/
File: relay_channel.kicad_sch

Title:

Size: A4	Date:	**Rev:**
KiCad E.D.A. 10.0.1		Id: 15/21

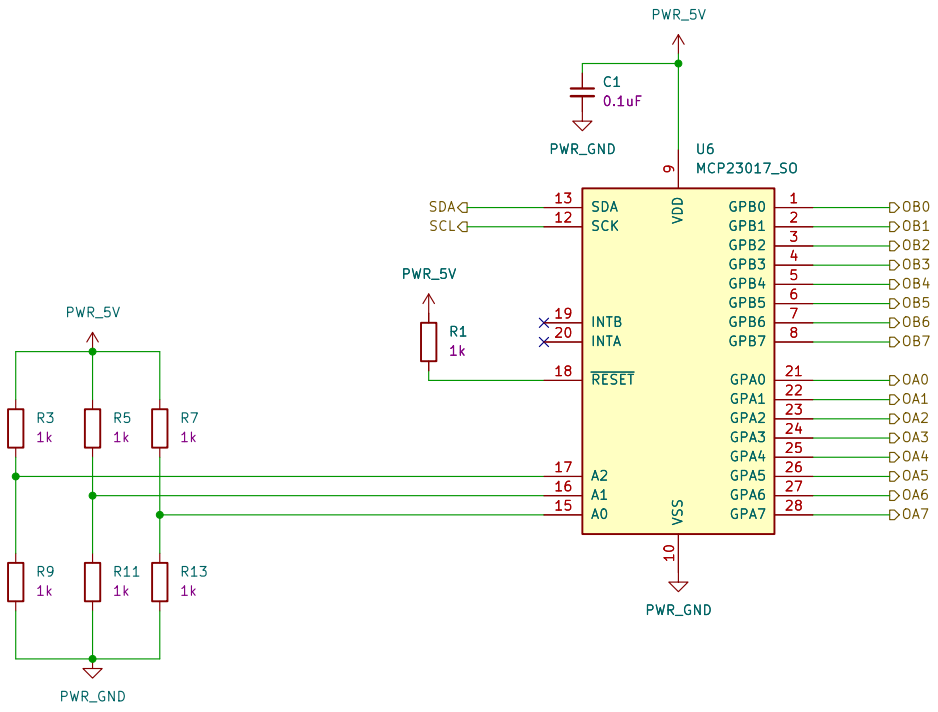

Sheet: /conrol1/
File: control.kicad_sch

Title:

Size: A4	Date:	**Rev:**
KiCad E.D.A. 10.0.1		Id: 16/21

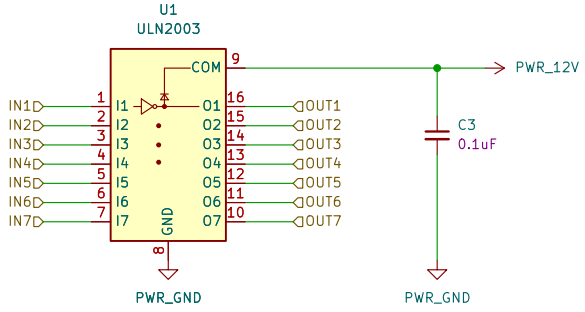

Sheet: /Relay_driver/
File: relay_driver.kicad_sch

Title:

Size: A4	Date:	**Rev:**
KiCad E.D.A. 10.0.1		Id: 17/21

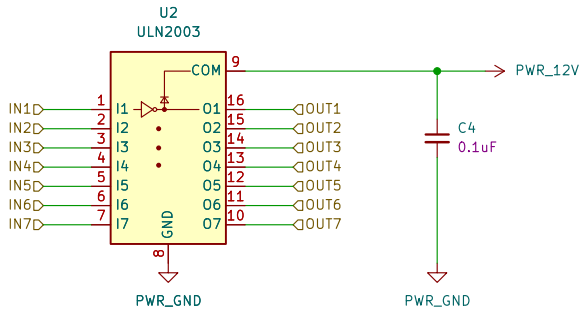

Sheet: /Relay_driver1/
File: relay_driver.kicad_sch

Title:

Size: A4	Date:	Rev:
KiCad E.D.A. 10.0.1		Id: 18/21

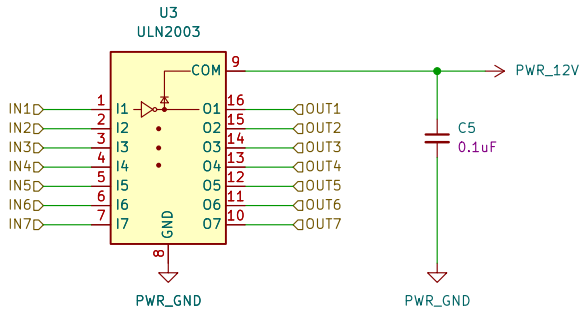

Sheet: /Relay_driver2/
File: relay_driver.kicad_sch

Title:

Size: A4	Date:	**Rev:**
KiCad E.D.A. 10.0.1		Id: 19/21

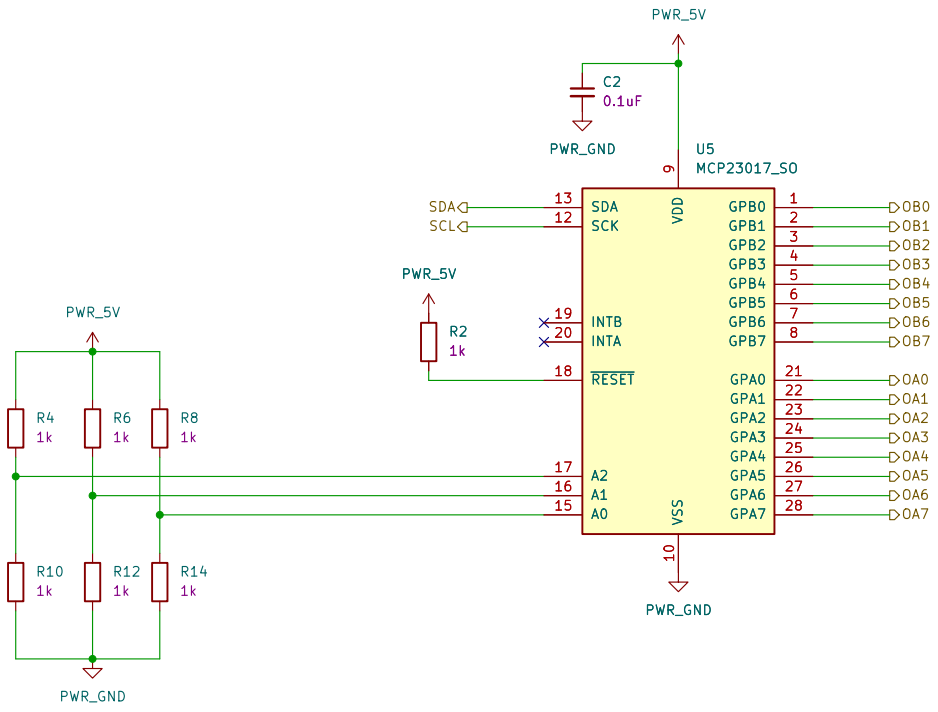

Sheet: /conrol/
File: control.kicad_sch

Title:

Size: A4	Date:	**Rev:**
KiCad E.D.A. 10.0.1		Id: 20/21

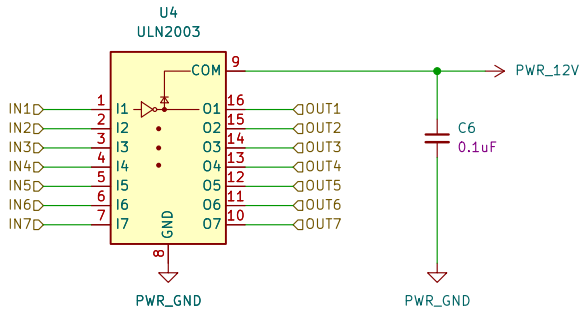

Sheet: /Relay_driver3/
File: relay_driver.kicad_sch

Title:

Size: A4	Date:	Rev:
KiCad E.D.A. 10.0.1		Id: 20/21