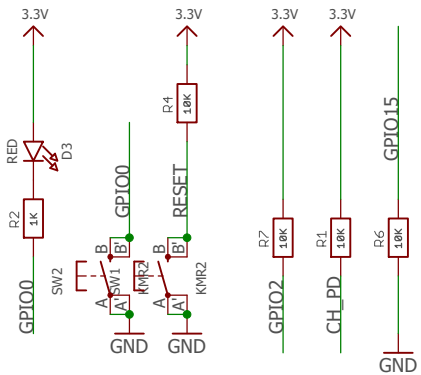

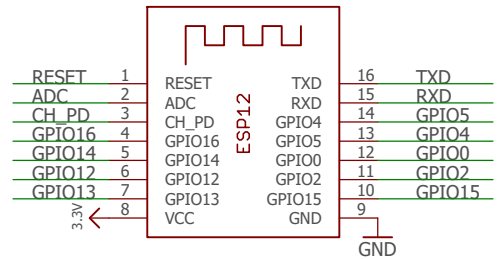

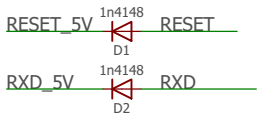

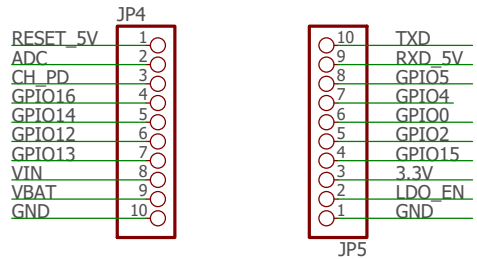

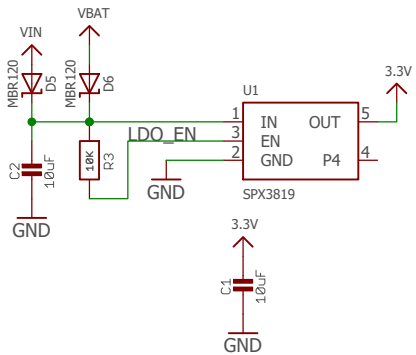

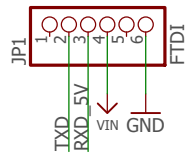

Adafruit ESP8266 Basic	
5/26/2015 11:25 AM	Sheet: 1/1
Drawing: >AUTHOR	Adafruit Industries