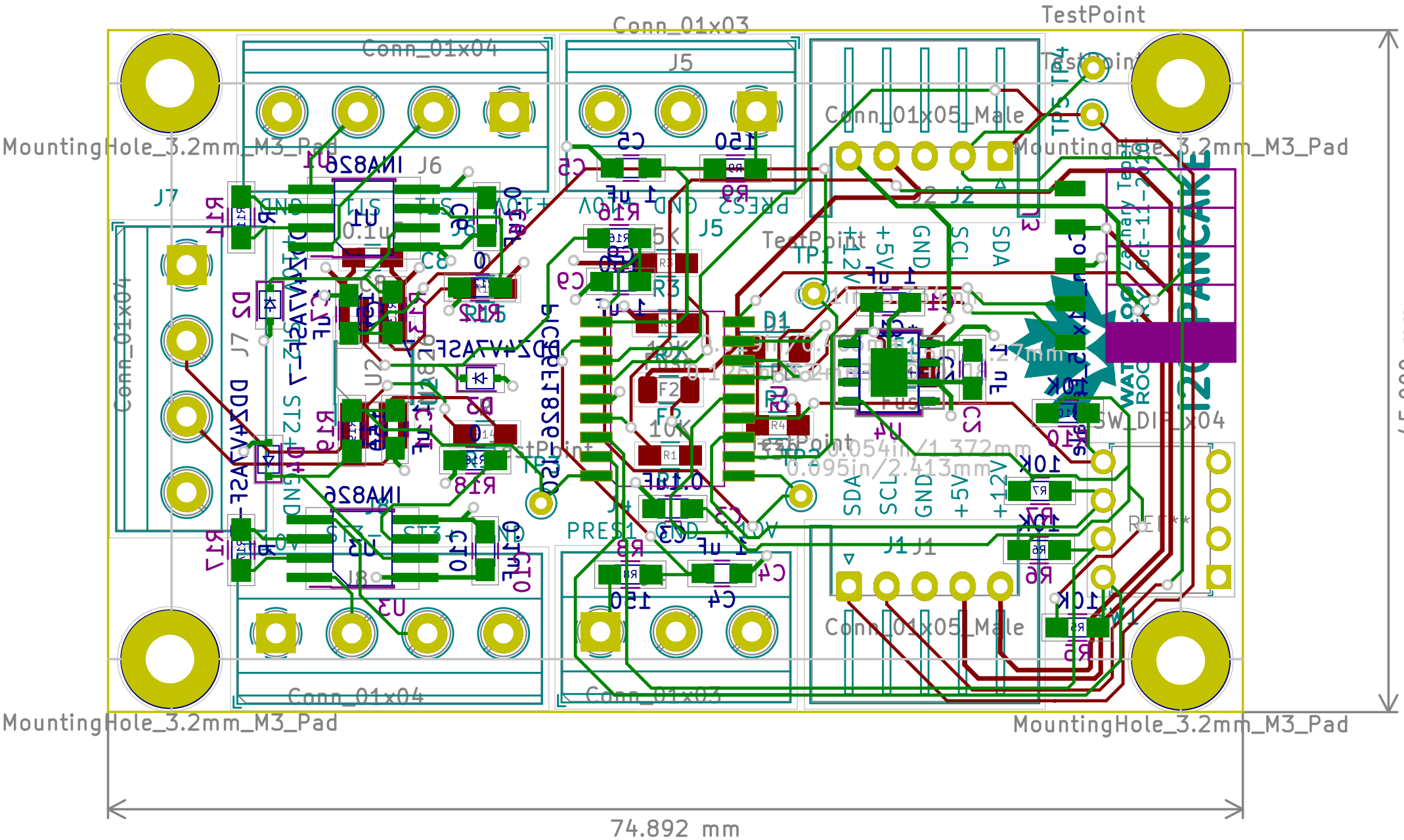
Conn_01x04
Conn_01x03
TestPoint
Conn_01x05_Male
MountingHole_3.2mm_M3_Pad
J7
J6
J5
J2
J1
J4
J8
U1
U2
U3
INA826
PRES2
PRES1
GND
+12V
SDA
SCL
+5V
SW_DIP_x04
REF**
45.000 mm
74.892 mm