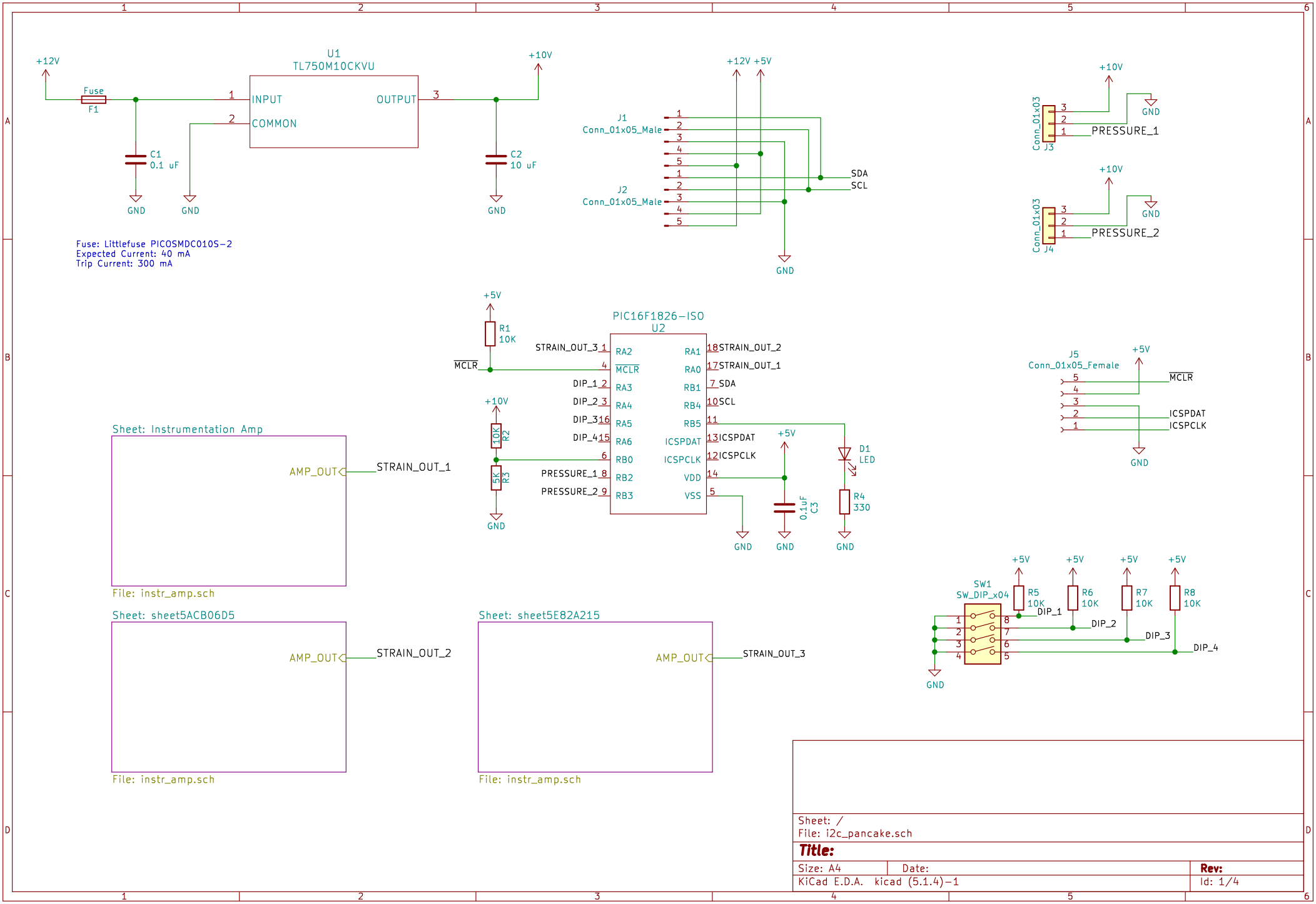
+12V
Fuse
F1
U1
TL750M10CKVU
INPUT
COMMON
OUTPUT
+10V
C1
0.1 uF
C2
10 uF
GND
Fuse: Littlefuse PICOSMDC010S-2
Expected Current: 40 mA
Trip Current: 300 mA
+12V +5V
J1
Conn_01x05_Male
J2
Conn_01x05_Male
SDA
SCL
Conn_01x03
J3
PRESSURE_1
J4
PRESSURE_2
+5V
R1
10K
MCLR
PIC16F1826-ISO
U2
STRAIN_OUT_3
DIP_1
DIP_2
DIP_3
DIP_4
RA2
RA3
RA4
RA5
RA6
RB0
RB2
RB3
RA1
RA0
RB1
RB4
RB5
ICSPDAT
ICSPCLK
VDD
VSS
STRAIN_OUT_2
STRAIN_OUT_1
R2
10K
R3
5K
PRESSURE_1
PRESSURE_2
D1
LED
R4
330
C3
0.1uF
J5
Conn_01x05_Female
Sheet: Instrumentation Amp
AMP_OUT
File: instr_amp.sch
Sheet: sheet5ACB06D5
Sheet: sheet5E82A215
SW1
SW_DIP_x04
R5
10K
R6
10K
R7
10K
R8
10K
DIP_1
DIP_2
DIP_3
DIP_4
Sheet: /
File: i2c_pancake.sch
Title:
Size: A4
Date:
Rev:
KiCad E.D.A. kicad (5.1.4)-1
Id: 1/4

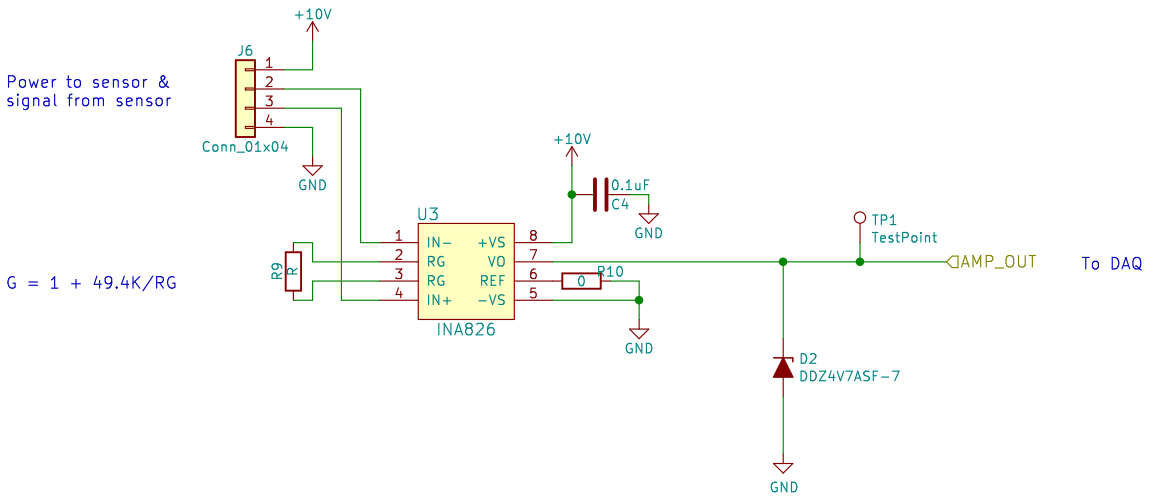

Sheet: /Instrumentation Amp/
File: instr_amp.sch

Title:

Size: A4	Date:	Rev:
KiCad E.D.A. kicad (5.1.4)−1		Id: 2/4

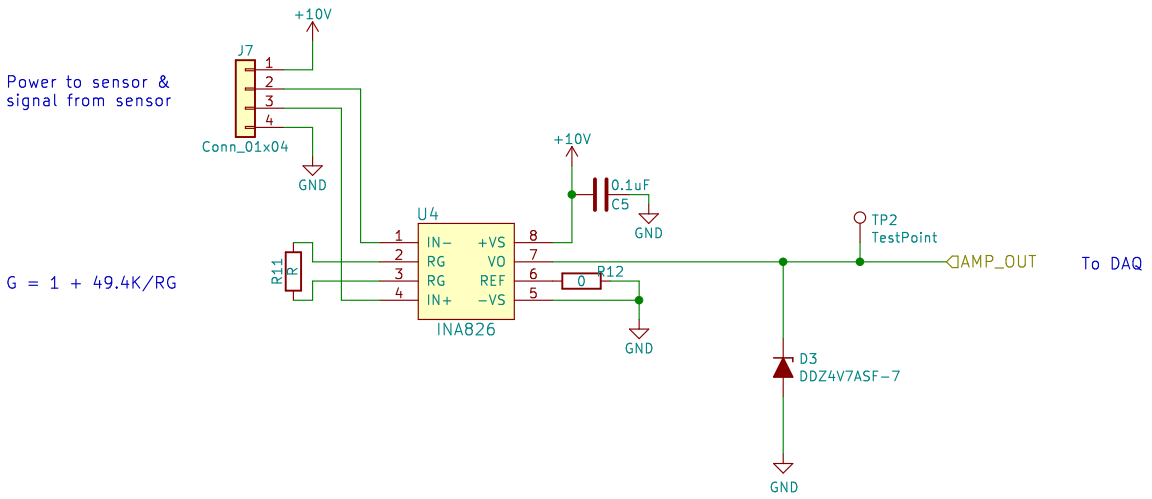

Sheet: /sheet5ACB06D5/
File: instr_amp.sch

Title:

Size: A4	Date:	Rev:
KiCad E.D.A. kicad (5.1.4)−1		Id: 3/4

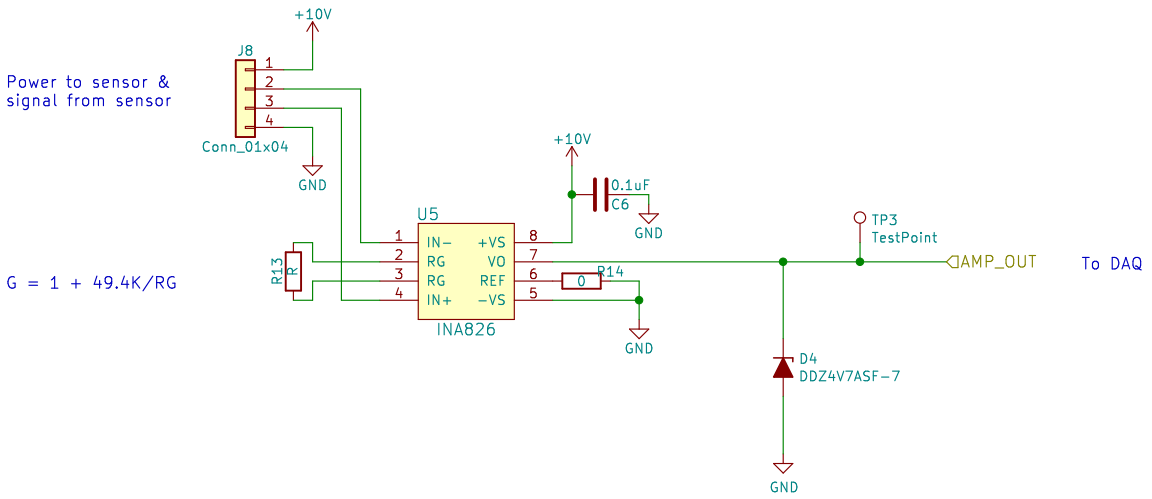

Sheet: /sheet5E82A215/
File: instr_amp.sch

Title:

Size: A4	Date:	Rev:
KiCad E.D.A. kicad (5.1.4)−1		Id: 4/4