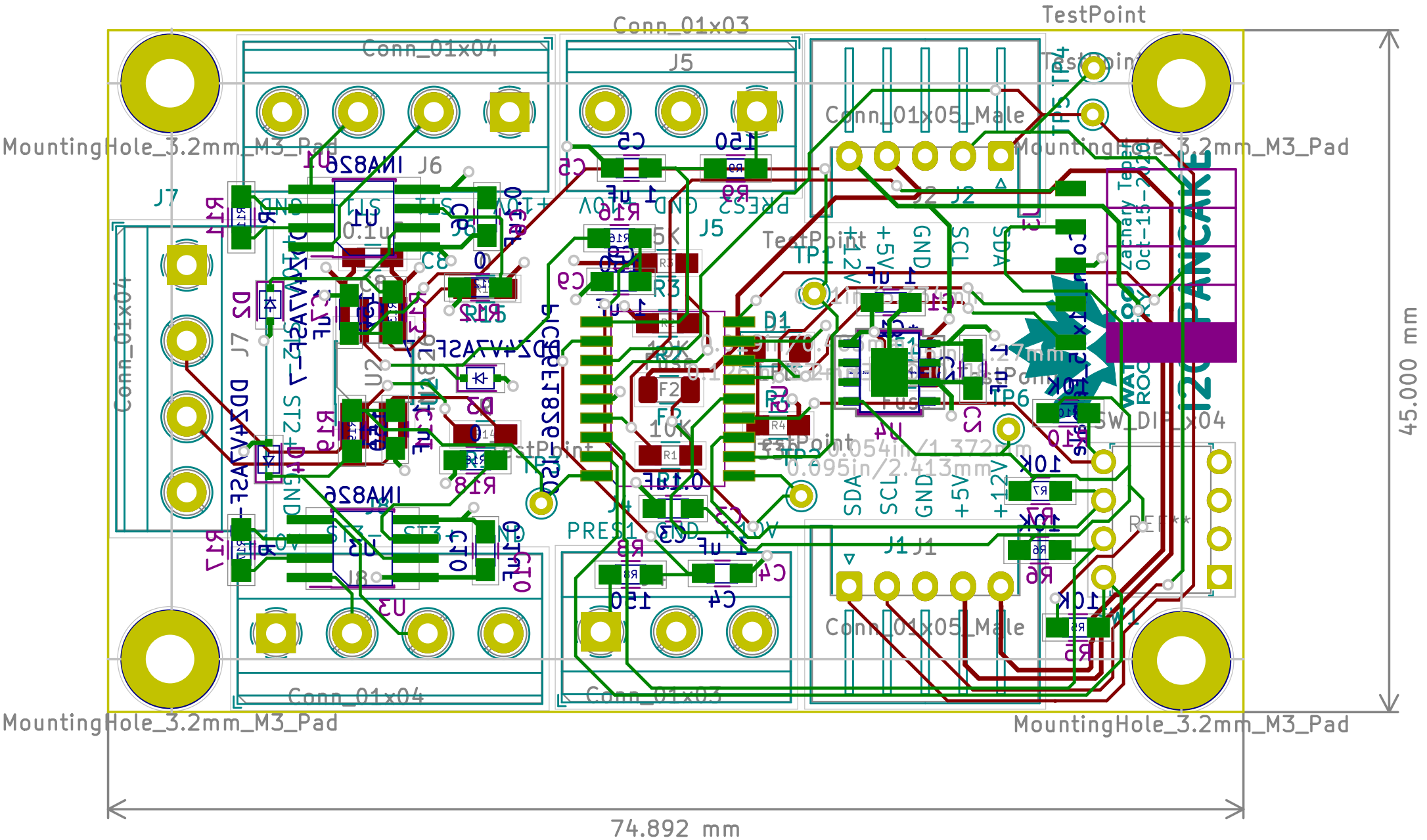
Conn_01x04
Conn_01x03
TestPoint
Conn_01x05_Male
MountingHole_3.2mm_M3_Pad
MountingHole_3.2mm_M3_Pad
MountingHole_3.2mm_M3_Pad
MountingHole_3.2mm_M3_Pad
Conn_01x04
Conn_01x03
Conn_01x05_Male
SW_DIP_x04
45.000 mm
74.892 mm