Wardriving Drone

CSE Senior Design

Yep, A., Kimeu, G., Smith, C., De Sa, G.

Executive Summary

The wardriving drone's goal was to create an autonomous network exploiting drone with an emphasis on usability and ease of use. Off-the-shelf retrofitting of drones for wardriving was an important goal. It establishes a system for monitoring Wi-Fi networks around the drone's active location. The drone has safety built-in but focuses on residential areas with low-rise buildings. A user can operate the drone at a considerable distance as it uses cellular connections and MQTT servers to connect with its command center. The biggest constraint is the battery. Users could exploit access points on the same flight if a drone is fitted with a larger battery. Our software can be downloaded and run on any operating system and added to any drone with an onboard Linux computer. Creating a network of drones that work together to wardrive at the user's discretion.

Background

- The idea of a wardriving drone is not a novel one. Most instances of wardriving, whether a drone or ground vehicle, utilizes a machine that can run the software, such as a laptop or even a Raspberry Pi, a detector that can read radio frequencies, and a GPS to map out the data collected. These materials are relatively cheap and available commercially off the shelf.
- Wardriving drones are lightweight and mobile and would leave no trace of physical evidence, making them ideal for espionage and reconnaissance.
- The main purpose for COTS wardriving is usually for white hat hacking or testing how vulnerable local network systems are [1]. However, there is a case where wardriving has been shown to illustrate geographical and socio-economic statuses among urban to rural areas in the wardriving path [2].
- As the Internet of Things expands, more intelligent devices connecting to networks also arise. Therefore, there is even more potential for networks to have vulnerabilities that can be exploited than ever before.

Experimental Setup

- The system shall be able to receive commands to start and stop access point discovery remotely.
- The system shall be able to use a cellular connection to output telemetry to the command center.
- The system shall be able to identify and locate access points, then map the access points to the command center for the user to view.
- The system shall be able to complete one mapping mission per battery cycle.

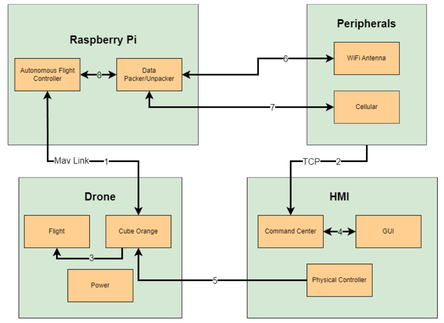

Figure 1. Wardriving Drone data flow diagram

Experimental Test Plan

- The Raspberry Pi shares the same power source as the Cube Orange that is mounted to the drone•
- The Raspberry Pi has a start-up program that runs upon powering up the drone, allowing the Pi to connect to the command center automatically
- The Command Center is equipped with a button that will manually start-up kismet [3] on the Pi for the user
- The Command Center uses Leaflet to plot Wi-Fi Access Points on the map
- SixFab [4] is used to communicate over a cellular connection between the Raspberry Pi and the Command Center
- MQTT is a server that we used as a medium to communicate needed information between the Command Center and the Raspberry Pi

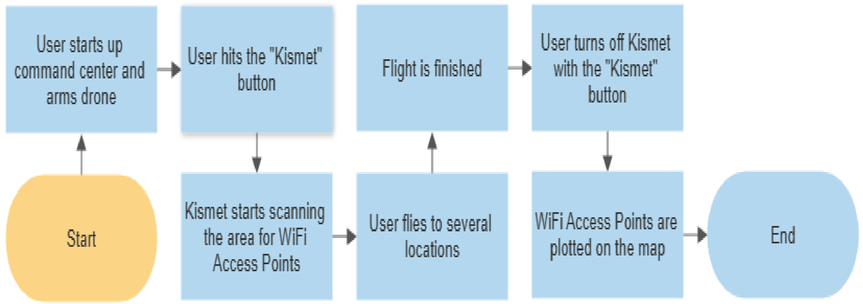

Figure 2. Wardriving drone flow chart

Experimental Results

- Drone operation time is 5 minutes.
- Command center does map the Wi-Fi access points for the drone to attack the navigation mission.
- We recommend two missions with this drone, a Navigation mission, and an Attack mission.
- Switching out batteries between missions is advised.
- Command center needs to be started up before the drone is plugged into power.

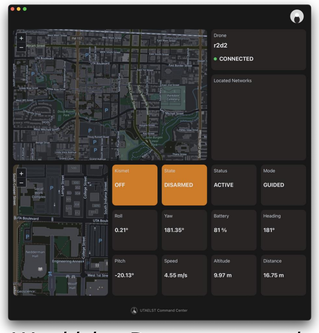

Figure 3. Wardriving Drone command center

Figure 4. Wardriving Drone

Conclusions

In conclusion, the Wardriving Drone project was successful because the requirements given by our client, Elbit Systems of America, were met. We accomplished a navigation mission that mapped out the Wi-Fi Access Points on a map with the Command Center we developed. We were met with constraints for our project, such as flight time, cellular costs, and the Raspberry Pi's processing power. The drone's flight time is shorter than expected; we could improve this by using a bigger battery. The cellular connection we use to send information back and forth was more costly than anticipated. We could change Kismet or the Raspberry Pi to filter out some data to address this. The Raspberry Pi's processing power causes increased battery consumption and possibly performance issues. Perhaps we could leave the more intensive work to the Command Center. The drone and Command Center we implemented are unique as it is custom to the specific tasks the client wanted to accomplish. The next goal is expanding the wardriving system to allow hacking into the Wi-Fi Access Points and flying autonomously. We want to thank Elbit Systems for the funding of this project.

References

1. Victor Ojong Etta, Arif Sari, Agbotiname Lucky Imoize, Piyush Kumar Shukla, and Musah Alhassan. Assessment and test-case study of wi-fi security through the wardriving technique. Mobile Information Systems, 2022, 2022.
2. Fabian Santos, Pablo Pesantes, and Santiago Bonilla-Bedoya. Exploring wardriving potential in the ecuadorian amazon for indirect data collection. IOP Conference Series: Earth and Environmental Science, 690, 3 2021.
3. Sadmin, Sharma, A., Kin, K., Mr.Kite, Taylor, J., Losungen, B., Tapia, J., Hansen, V., Svinin, A., G, G., Bo, L., & Pennytester, A. (2017, June 22). *How to wardrive with the kali raspberry pi to map wi-fi devices*. WonderHowTo. Retrieved September 22, 2022, from https://null-byte.wonderhowto.com/how-to/wardrive-with-kali-raspberry-pi-map-wi-fi-devices-0176558/
4. Sixfab. (n.d.). *Getting started: RASPBERRY PI 4G/LTE CELLULAR MODEM KIT*. Sixfab Docs. Retrieved January 23, 2023, from https://docs.sixfab.com/docs/raspberry-pi-4g-lte-cellular-modem-kit-getting-started
5. ArduPilot Documentation — ArduPilot documentation. (n.d.). Ardupilot.org. https://ardupilot.org/ardupilot/