Loyola Marymount University

Safe and Reactive Robotic Arm for Ball Interception and Obstacle Avoidance

Makari Green, Arye Mindell, Daniel Childs

Senior Capstone 2025-2026

LMU Department of Electrical and Computer Engineering

Meet the team

Makari Green

Lead on GPU integration and ball tracking. Responsible for sensor data handling, feature extraction, and trajectory computation.

Arye Mindell

Lead on ROS control and motion planning. Develops motion trajectories, synchronization with ROS, and actuator control logic.

Daniel Childs

Lead on system testing and safety integration. Implements obstacle detection algorithms, safe-abort logic, and test data collection. Assists with ROS implementation and final performance evaluation.

Problem

Safely catch a ball, avoiding static obstacles.

Importance

Robots for dynamic work and life, safely interact in real time

Motivation

Exploring high-speed perception and safe motion control.

Interactive demonstrations for students.

Loyola Marymount University

https://brand.lmu.edu/templatesanddownloads/printstationery/

Sustainability

Supports the United Nations Sustainable Development Goals (SDGs):

- **SDG 3**: Good Health and Well-Being
  - Our system enhances human safety through LiDAR monitoring, automatic safe-abort behavior, and smooth, predictable robot motion that reduces injury risk. [1]
- **SDG 9**: Industry, Innovation, & Infrastructure
  - We advance robotics innovation by developing a modular, GPU-accelerated sensing and motion-planning system that is efficient, scalable, and reusable for industrial applications. [1]

Image Source: https://www.arenasolutions.com/resources/glossary/sustainable-development-goals/
Accessed: October 15, 2025

Requirements

	Functional Requirements		Justification
R1	Toss Type	Underhand	Most consistent and predictable trajectory
R2	Ball Speed	up to 3 m/s groundspeed	Gives a minimum of 1 second reaction time for ball tracking and motion planning if thrown from 3m away
R3	Ball Size	~5 cm	Size of baseball or lacrosse ball
R4	Ball Color	Bright color	Easy to identify with CV methods
R5	Catch Volume	95% of robot reach –> front 50%	intercept solutions attainable by the robot
R6	Release Lane	3m – 5m away, 5m high, angle of 25° from robot center	Balls always remain within view of tracking camera
R7	Catch Success Rate	90% -> with no obstacles 50% with obstacles	Main project objective
R8	Lighting	Favorable, Indoor	Simplify CV algorithms
R9	Obstacle Size/Shape	30mm dia. x 500 mm len	Size of typical child forearm
R10	Obstacle Zone	Outer 50% of Catch Volume (ring)	Prevents joint singularities when avoiding obstacles (gives robot space to move)
R11	Obstacle React Time	3 seconds	slower than real time ("Static" obstacles)
R12	Obstacle Avoid Rate	90%	Main project objective (ISO 10218 / ISO 15066, Collaborative Robot Safety)
R13	Smoothness	Joint speeds 3.14 rads/s, accel 20 rads/s^2	Achieve max speed in reasonable time while maintaining reasonable smoothness (IEC 61508, Functional Safety)
R14	Cost	<$8700	Budget allocated for project

Engineering Requirements

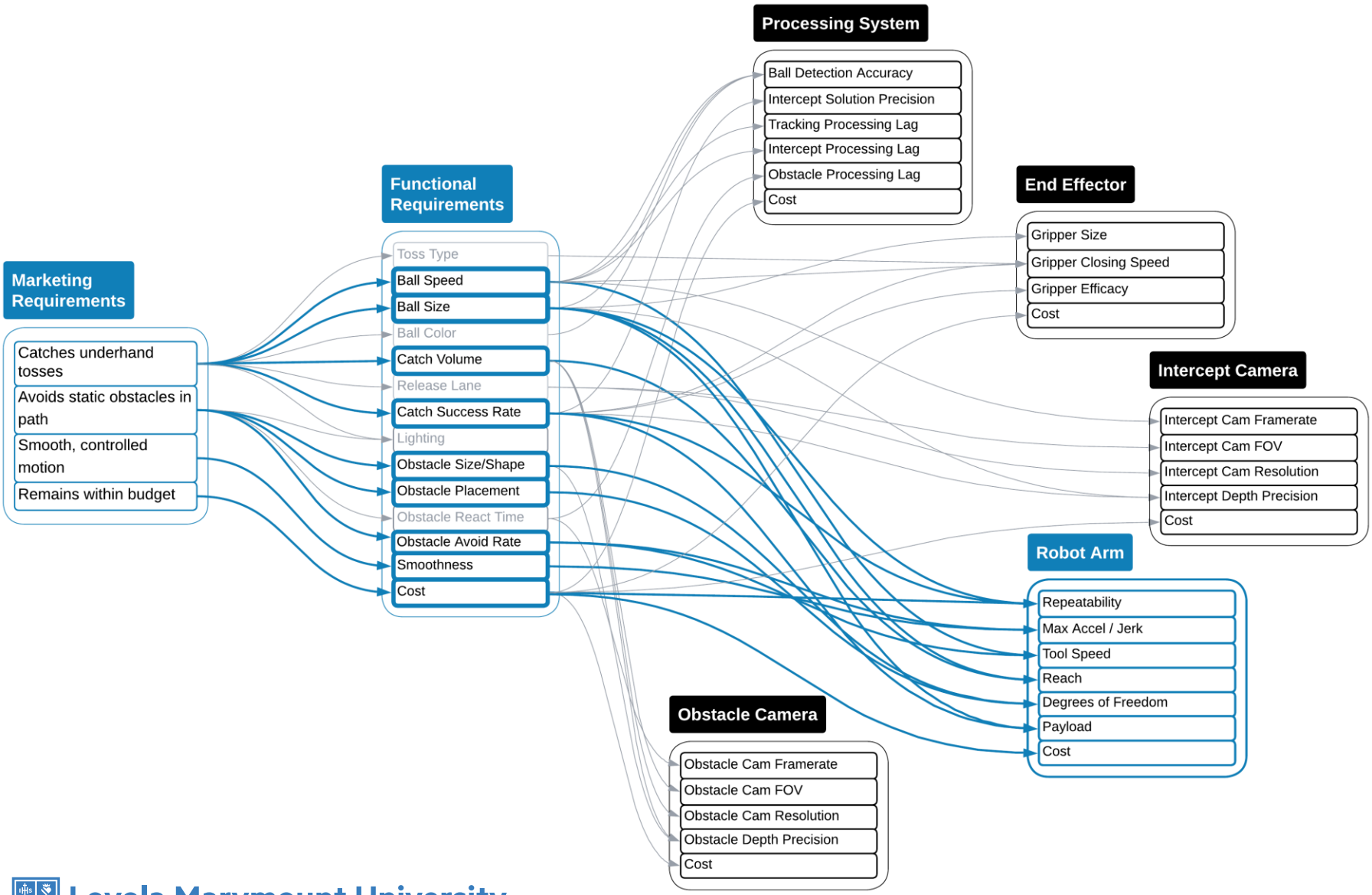

Decision Matrices

Legend

Worst **Best**

End Effector

	Weight	3D Printed Basket	Gripper	Miniature Basketball Net
Grip Strength	25%	0.26	0.43	0.30
Versatility	35%	0.35	0.25	0.40
Cost	15%	0.48	0.19	0.33
Durability	15%	0.44	0.25	0.31
Ease of Integration	7%	0.32	0.26	0.42
Development Time	3%	0.45	0.23	0.32
Weighted Score		0.36	0.29	0.35

Processing

	Weight	GPU (4070)	FPGA + GPU	Jetson Orin	CPU
Latency	35%	0.47	0.39	0.12	0.02
Throughput	31%	0.47	0.46	0.08	0.04
Integration	15%	0.31	0.08	0.38	0.23
Power	8%	0.11	0.10	0.47	0.33
Cost	7%	0.27	0.27	0.09	0.37
Dev Complexity	4%	0.23	0.09	0.23	0.45
Weighted Score		**0.39**	**0.32**	**0.18**	**0.13**

Ball Tracking Cam

	Weight	FLIR Blackfly	Triton RGB	Triton EVS
Framerate	37%	0.36	0.18	0.45
Resolution	18%	0.42	0.42	0.17
Consistency	22%	0.42	0.42	0.17
Cost	16%	0.39	0.35	0.26
Ease of Integration	7%	0.23	0.38	0.38
Weighted Score		**0.38**	**0.318**	**0.303**

System Design

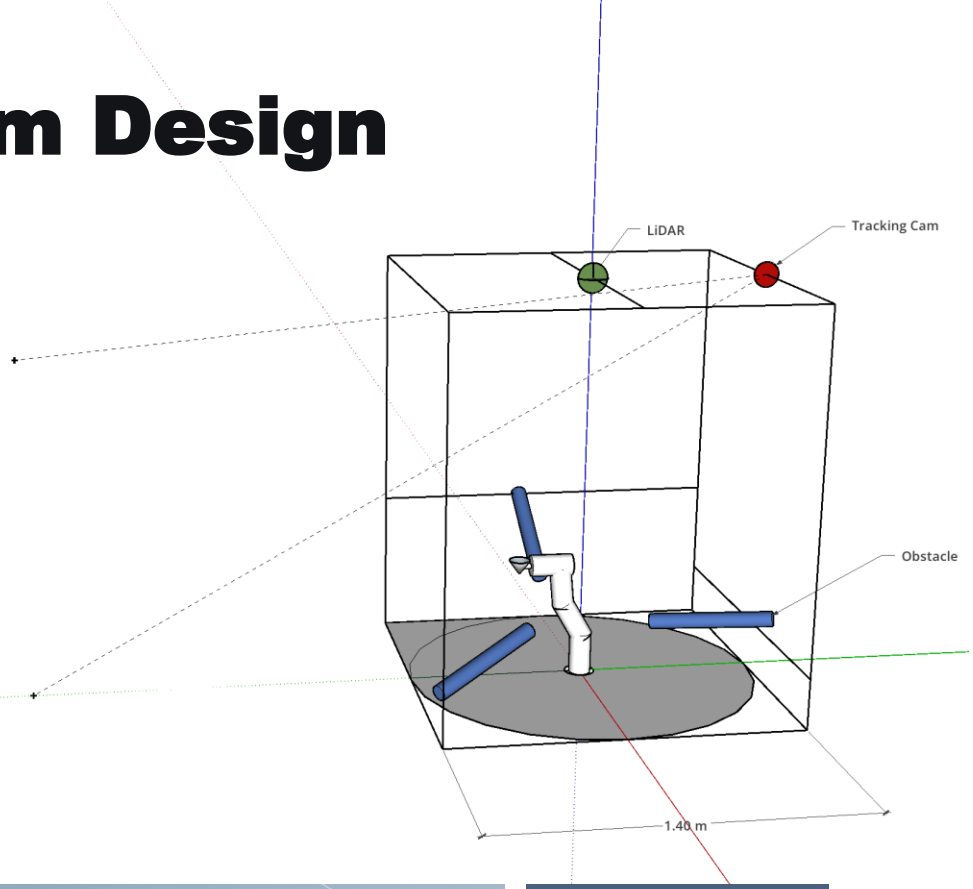

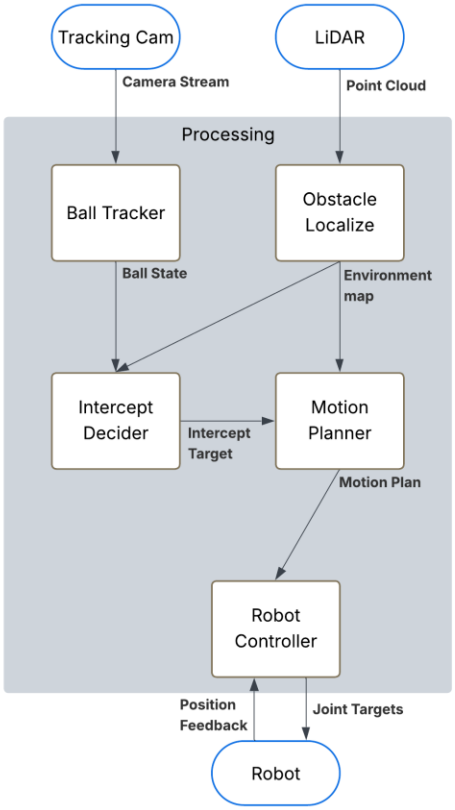

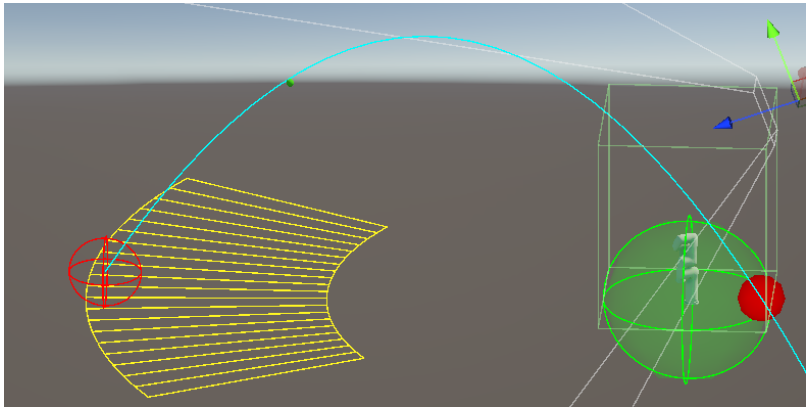

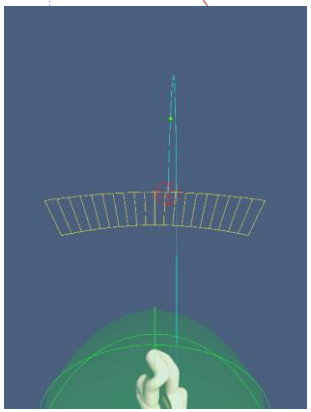

Project Cost

Cost Table

Item	Cost ($)	Need to Purchase?
Robotic Arm	$6000	Purchased
LiDAR Depth Camera	$0	No
Tracking Camera (FLIR Blackfly)	$370 - 500	Purchased
GPU (Tensor Core)	$500 - 600	Yes
Testing Equipment	$400 - 700	Yes
Total Cost	$7270 - $7800	

Obstacle Localization

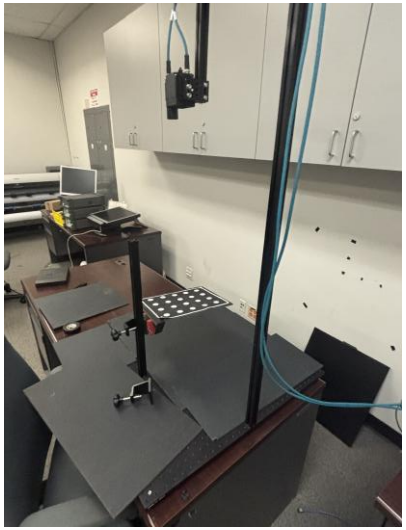

Current Subsystem Progress

- Helios 2+ Integrated and tested
- 3D Point cloud generation
- Begin ROS2 Framework Integration

Next Steps

- 3D Voxelization for ROS2 Topic
- Obstacle Detection / Pose Estimation?
- Add obstacles to Robot URDF

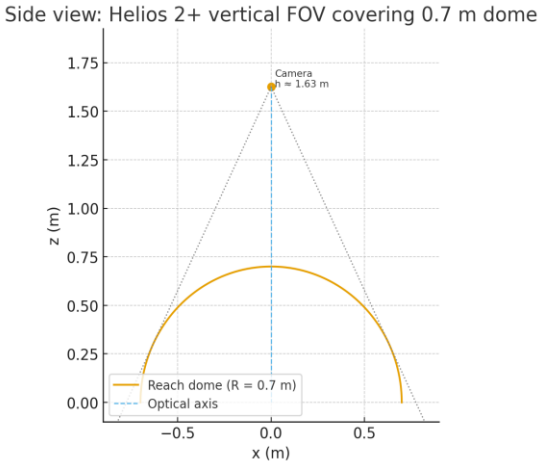

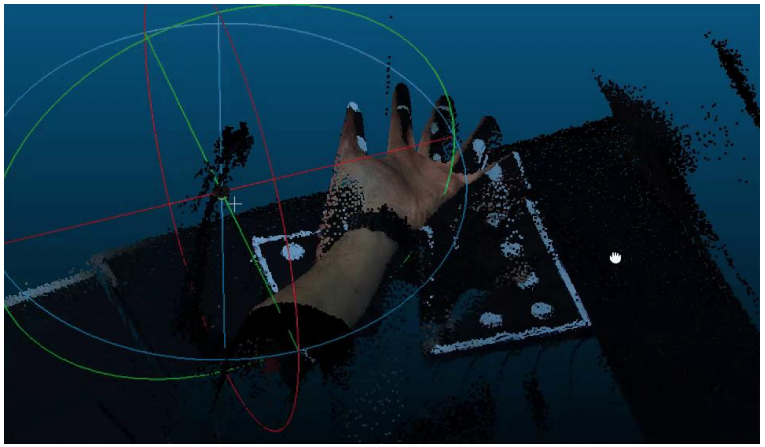

Ball Tracking / Intercept

Current Subsystem Progress

- Kalman Filter tracker achieving 13-16px landing prediction accuracy
- Front facing detection system with depth estimation validated across 3m throw distance.
- Conducted comparative analysis of three prediction algorithms (Basic Least Squares, Enhanced with Weights, Kalman)

Next Steps

- Integrate tracker with ROS2 for real-time arm control communication
- Implement coordinate transformation pipeline from camera pixel space to robot base frame

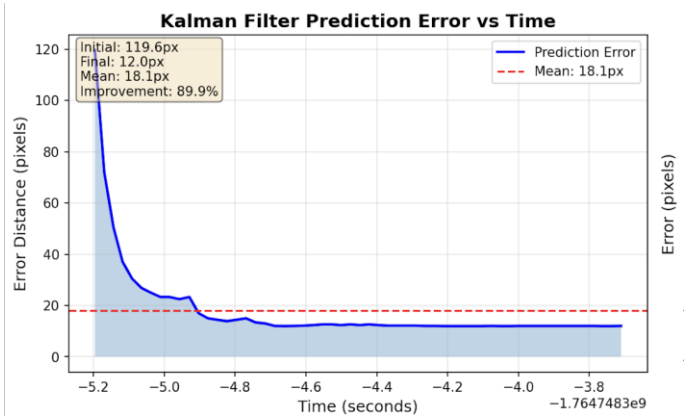

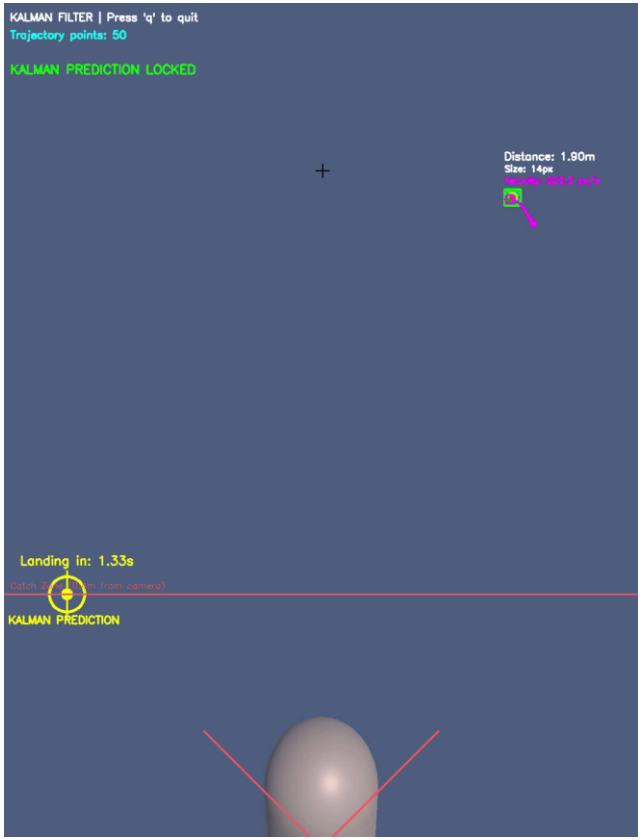

End Effector / Gripper

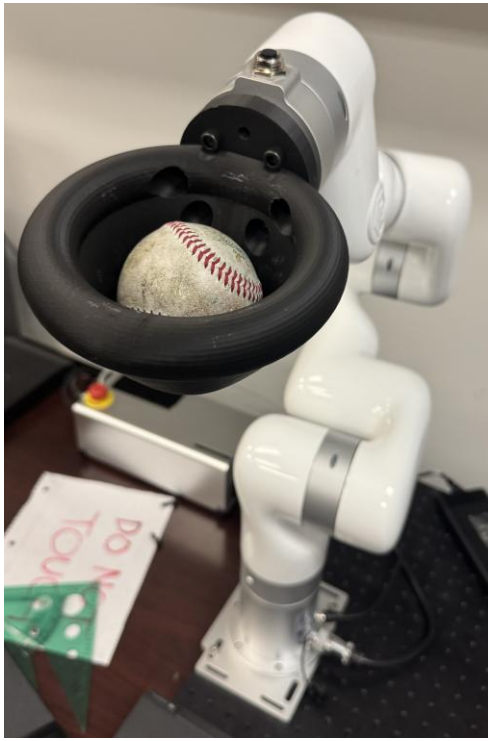

Current Subsystem Progress

- First end effector design has been modeled and printed
- The current design has been mounted
- Durability and catchability testing has begun

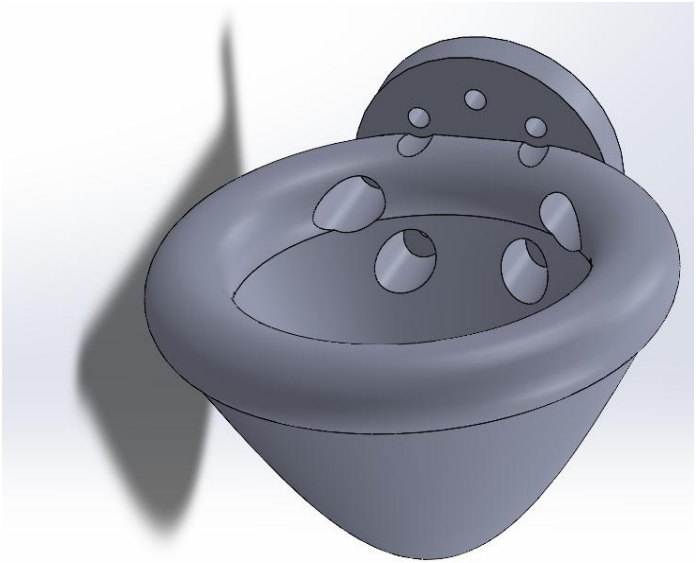

Next Steps

- Look into new end effector designs
- Establish controlled quantifiable testing to compare the accuracies of the different iterations made

Robot / Motion Planning

Current Subsystem Progress

- Arm purchased and mounted in test setup
- Max joint speeds tested
- ROS2 Simulation environment and nodes set up

Next Steps

- Test motion control with MoveIt and ROS2 nodes/topics
- Explore solutions for motion planning

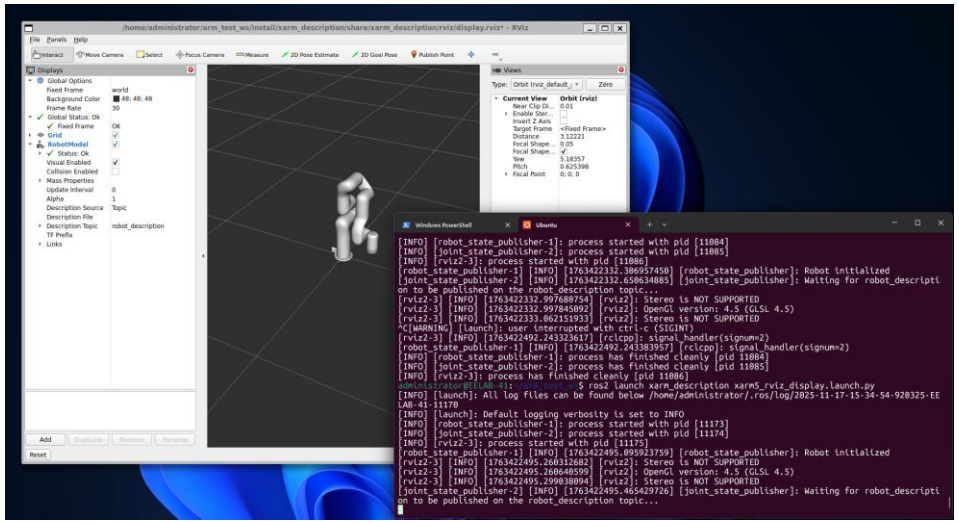

Ethics and Standards

- IEEE 1228 – Software Safety Plans [2]
  Our real-time GPU planning software follows IEEE 1228 by defining hazards (unsafe arm motion, missed detections) and implementing formal mitigation procedures such as clearance enforcement and emergency-stop states.
- IEEE 1028 – Software Reviews and Audits [3]
  We use version-controlled code reviews and simulation-based validation to ensure traceability, correctness, and compliance with 1028 review guidelines.
- IEEE 1872.2 – Autonomous Robotics Ontologies [4]
  Our perception and planning modules maintain clear semantic separation (sensing → prediction → control), aligning with structured robotic decision-making defined by IEEE 1872.2.
- ISO 10218 / ISO 15066 – Collaborative robot safety [5]
  Our robot operates with enforced speed limits, restricted workspaces, safe-abort logic, and LiDAR-based human intrusion detection consistent with collaborative robotics safety requirements.
- IEC 61508 – Functional Safety of Electrical/Electronic/Programmable Electronic Systems [6]
  Our emergency-stop behavior, safe-abort logic, LiDAR intrusion detection, and speed/jerk limits follow functional safety principles defined in IEC 61508 for reducing hazardous system states.

IEEE, *IEEE Std 1228-1994: IEEE Standard for Software Safety Plans*. New York, NY, USA: IEEE, 1994. (Antpedia)

Milestones / Timeline

- Subsystem Prototypes – F25
- Preliminary Obstacle Detection and Control Algorithms– F25
- Tracking and Intercept Algorithm – SP26
- System Integration, Refinement, and Testing – SP26
- Final demo and report – SP26

Thank You!

Sources

[1] United Nations, “THE 17 GOALS,” Sustainable Development Goals. [Online]. Available: https://sdgs.un.org/goals. Accessed: Oct. 27, 2025. (Sustainable Development Goals)

[2] IEEE, *IEEE Std 1228-1994: IEEE Standard for Software Safety Plans*. New York, NY, USA: IEEE, 1994. (Antpedia)

[4] IEEE, IEEE Std 1872.2-2021: IEEE Standard Ontologies for Robotics and Automation—Part 2: Autonomous Robotics (AuR) Ontology. New York, NY, USA: IEEE, 2021. (IEEE Xplore)

[3] IEEE, *IEEE Std 1028-2008: IEEE Standard for Software Reviews and Audits*. New York, NY, USA: IEEE, 2008. (ANSI Webstore)

[5] ISO, *ISO 10218-1:2025—Robotics—Safety requirements—Part 1: Industrial robots*. Geneva, Switzerland: ISO, 2025. (ISO)

[5] ISO, *ISO 10218-2:2025—Robotics—Safety requirements—Part 2: Industrial robot applications and robot cells*. Geneva, Switzerland: ISO, 2025. (ISO)

[6] IEC, IEC 61508:2010—Functional safety of electrical/electronic/programmable electronic safety-related systems. Geneva, Switzerland: International Electrotechnical Commission (IEC), 2010. (IEC)