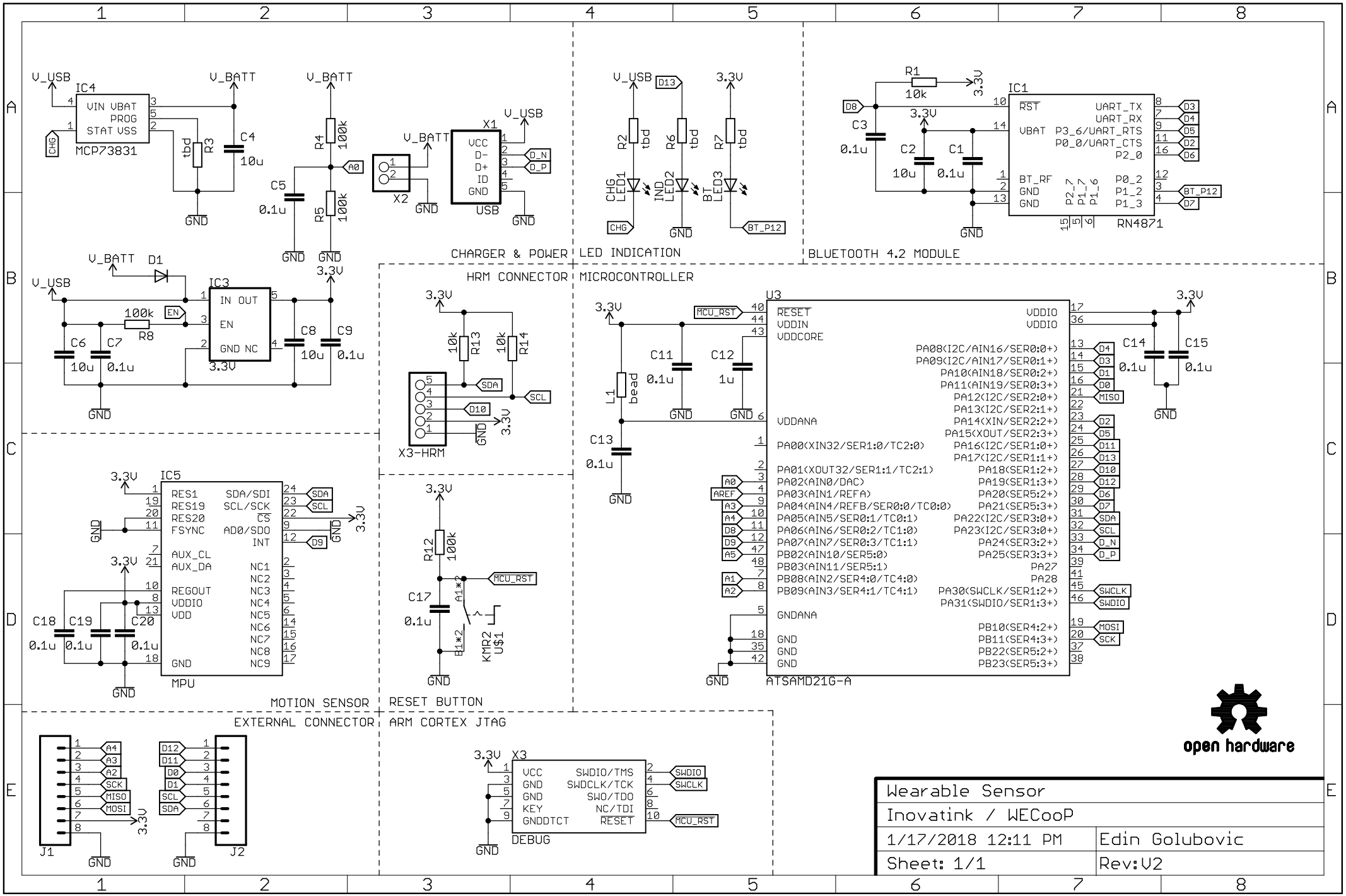
CHARGER & POWER
LED INDICATION
BLUETOOTH 4.2 MODULE
HRM CONNECTOR
MICROCONTROLLER
MOTION SENSOR
RESET BUTTON
EXTERNAL CONNECTOR
ARM CORTEX JTAG
IC4 MCP73831
IC1 RN4871
IC3
IC5 MPU
U3 ATSAMD21G-A
X1 USB
X2
X3-HRM
X3 DEBUG
J1
J2
KMR2 U$1
open hardware
Wearable Sensor
Inovatink / WECooP
1/17/2018 12:11 PM
Edin Golubovic
Sheet: 1/1
Rev:V2