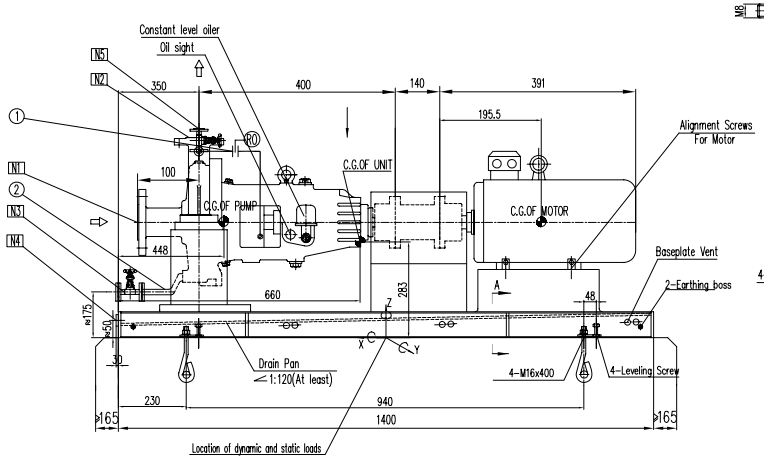

EARTHING BOSS

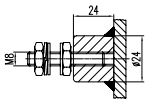

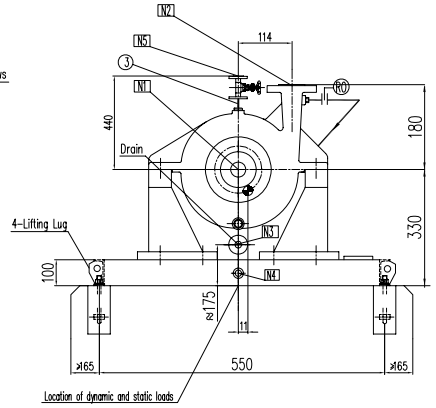

PROCESS CONNECTIONS			
Code	Size & Rating	Description	Remark
N1	1 1/2"-ANSI 300Lb-RF	Suction	
N2	1"-ANSI 300Lb-RF	Discharge	
N3	3/4"-ANSI 300Lb-RF	Pump Drain	Flange With valve & blind flange
N4	G2"	Baseplate Drain	
N5	3/4"-ANSI 300Lb-RF	Pump Vent	Flange With valve & blind flange

Pipeline Description
① Plan 11 flushing Pipe
② Pump Drain Pipe
③ Pump Vent Pipe

WEIGHT TABLE			
PUMP	:	75	KG
MOTOR	:	64	KG
SEAL SYSTEM	:	N/A	KG
BASE PLATE	:	140	KG
ROTOR	:	13.1	KG
OTHERS	:	11	KG
TOTAL WEIGHT	:	290	KG

Maximum Allowable Amplitude For Foundation			
Velocity(PEAK)	:	4	mm/s
Displacement	:	25.4	μm

GENERAL NOTES

PUMP INFORMATION	
Item No.:	102-P-110
Unit:	102
Service:	LEAN MEG FEED PUMP
Model:	APIFLO-LF 40-25-200
Seal Plan:	11+61
Motor:	4KW - 2900RPM

1. Valve type of pump drain and vent is ball valve.

REFERENCE DRAWINGS	DWG NO.
MOTOR OUTLINE DRAWING	VP-SP2021-ON-MA-102-P110-0014
COUPLING DRAWING	VP-SP2021-ON-MA-102-P110-0008

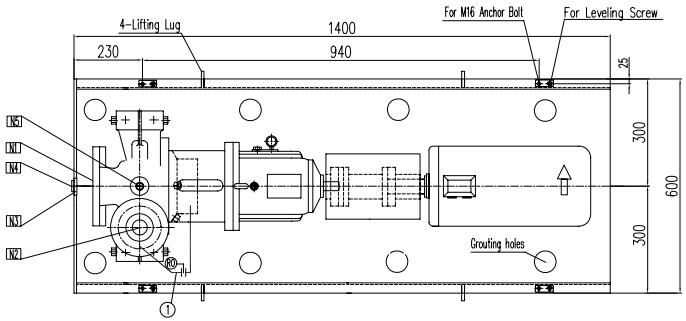

PLAN VIEW

A-A

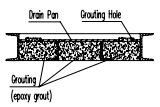

ANCHOR BOLT

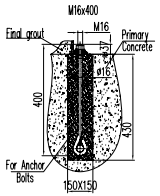

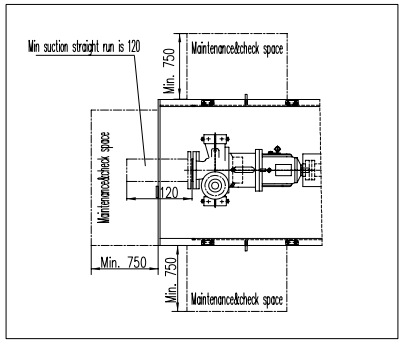

Code		
Code1	■	(Approved) Vendor to submit "For Final (No comment & release for manufacturing)
Code2	☐	(Approved with comments) Vendor shall correct / revise & submit it as "For Final" (Released for manufacturing if change incorporated as indicated)
Code3	☐	(Commented) : Vendor shall correct / revise & resubmit . It as " For Approval" of the date specified : (Corrected documents to be
Code4	☐	Not Acceptable quality (Reject)

The above checking result by OIEC shall in no way relieve Vendor of any liability, obligation and responsibility out of the purchase order and the mutual agreement in writing

OIEC-SP 20&21

DATE : 22/07/2014
DEPT: Machinery
Signature : Salem

Only for internal review					
CV	PI	EL	IN	ME	MA
ST	BU	PR	SA	HV	TL

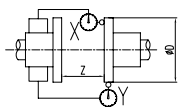

D≤200	X	≤0.05
	Y	≤0.05
	Z	Z±0.1
200<D≤300	X	≤0.08
	Y	≤0.08
	Z	Z±0.15
300<D≤400	X	≤0.10
	Y	≤0.10
	Z	Z±0.2

MAX. ALLOWABLE MISALIGNMENT(mm)

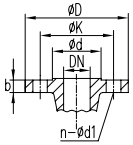

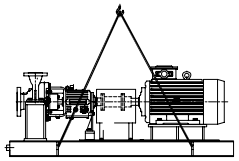

Center of Gravity List		
PUMP	X	252
	Y	0
	Z	330
MOTOR	X	-385.5
	Y	0
	Z	330
UNIT	X	40
	Y	11
	Z	283

Rotation: Clockwise viewed from the drive-end

Static loading calculation results		
FXStatic=±	3200	N
FYStatic=±	2580	N
FZStatic=±	203/5667	N
MXStatic=±	2900	N*m
MYStatic=±	3578/3175	N*m
MZStatic=±	2445	N*m

Dynamic loading calculation results		
FXdynamic=±	0	N
FYdynamic=±	9	N
FZdynamic=±	9	N
MXdynamic=±	16/-10	N*m
MYdynamic=±	3	N*m
MZdynamic=±	3	N*m

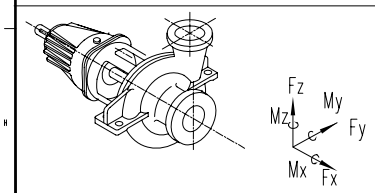

DISCHARGE	1"	±1420	±1160	±1780	±920	±460	±700
	inch	Fx	Fy	Fz	Mx	My	
	DN	Force (N)			Moment (Nm)		
SUCTION	1 1/2"	±1780	±1420	±1160	±920	±460	±700
	inch	Fx	Fy	Fz	Mx	My	
	DN	Force (N)			Moment (Nm)		

Nozzle Allowable Force & Moment

N5	ANSI B16.5 300lb RF	3/4"	117.3	15.7	82.5	42.9	4-ø18	
N3	ANSI B16.5 300lb RF	3/4"	117.3	15.7	82.5	42.9	4-ø18	
N2	ANSI B16.5 300lb RF	1"	124	17.5	89	50.8	4-ø18	
N1	ANSI B16.5 300lb RF	1 1/2"	155.4	20.5	114.3	73	4-ø22	
Name	Standard	DN	øD	b	øK	ød	n-ød1	

Flange Size

REV.	DATE	DESCRIPTION	ORIG.	PREP.	CH'D.	APP'D.	Contractor APP'D
4	30.Jun.2014	FOR APPROVAL	DBP	Thomas	Andy	Ryan	
3	06.Jun.2014	FOR APPROVAL	DBP	Thomas	Andy	Ryan	
2	06.May.2014	FOR APPROVAL	DBP	Thomas	Andy	Ryan	
1	19.Mar.2014	FOR APPROVAL	DBP	Thomas	Andy	Ryan	
0	20.JAN.2014	FOR APPROVAL	DBP	Thomas	Andy	Ryan	

SOUTH PARS GAS FIELD DEVELOPMENT-
PHASES 20 & 21, ASSALUYEH-IRAN
ONSHORE FACILITIES

NIOC
PARS OIL AND GAS COMPANY

PROJECT No.: POGC-572-88-35 | DOC.CLASS: | SCALE :

DEEP BLUE PUMP CO.

OIEC

102-P-110
LEAN MEG FEED PUMP
GENERAL ARRANGEMENT DRAWING

DRAWING No. VP-SP2021-ON-MA-102-P110-0001 | SHEET No. 1 OF 1 | REV. 4