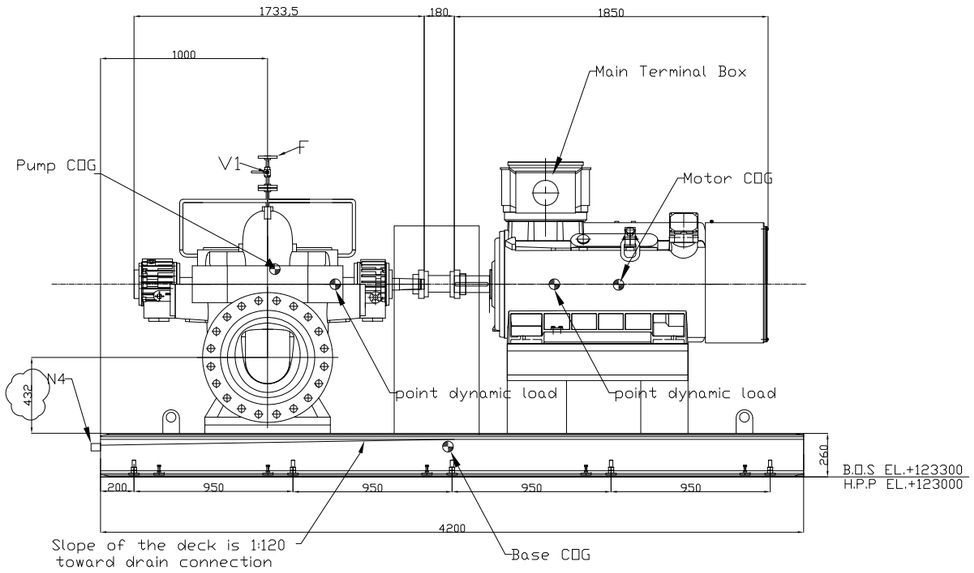


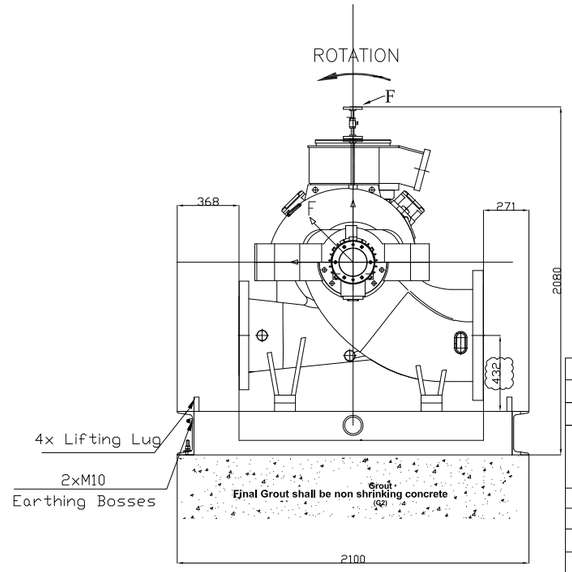


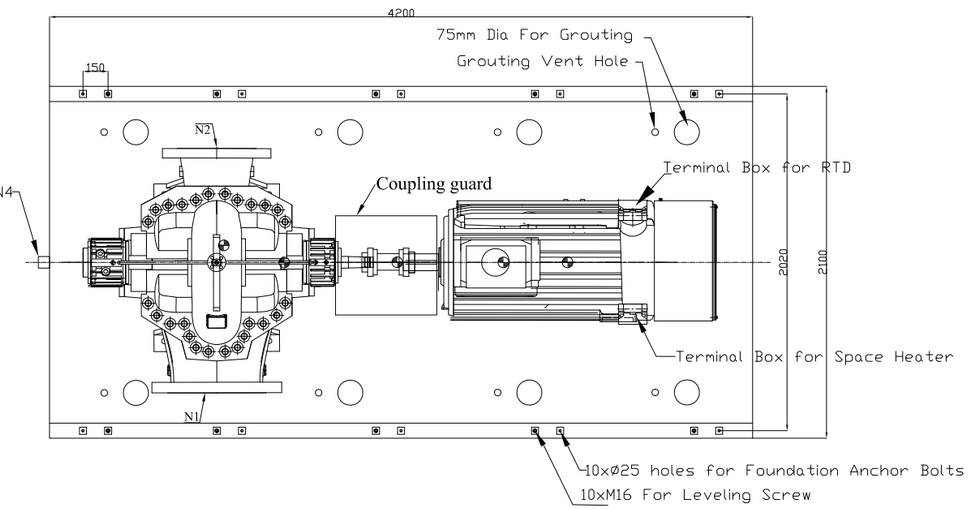


| REFERENCE DOCUMENTS | DOC. NO. |
|---|---|
| Pump Data Sheet and Performance Curve for 40-P-205 | VP-40-000-MA-0011-0024 |
| Pump cross sectional drawing and Part list for 40-P-205 | VP-40-000-MA-0011-0096 |
| Coupling Drawing for 40-P-205 | VP-40-000-MA-0011-0132 |
| Motor data sheets for 40-P-205 | VP-40-000-MA-0011-0168 |
| Motor outline drawing for 40-P-205 | VP-40-000-MA-0011-0240 |
| Pump P&ID for 40-P-205 | VP-40-000-MA-0011-0276 |

**NOTE**

1-All Dimensions are mm.
2-Material of base plate is Aluminium.
3-Material of base plate is ASTF & bolt A193 Gr B7 and nut A194 Gr 2H.
4-Maintenance Area is 2m from Motor and and 1m from other sides.
5-All Dimension Clearances are according to ISO 286-1.

-Bolt material shall conform to specification ASTM A193 Grade B7 (anchor bolts shall be partly hot dip galvanized in thread length plus 100mm length embedded into concrete).
-Anchor bolt and nut will be supplied by IIP
-All nuts&washers shall be hot dip galvanized according to ASTM A153
-Grout thickness: 30mm

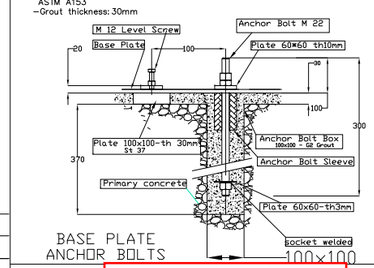


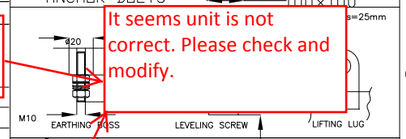


It seems unit is not correct. Please check and modify.

| Dynamic Load | |
|---|---|
| Motor Dynamic Load : | 7.66 KN |
| Pump dynamic Load : | 6.6 KN |
| Total Dynamic Load | Fx: 10 KN<br>Fy: It can be ignored<br>Fz: 10 KN |
| **Static Load** | |
| Motor Static Load : | 23 KN |
| Pump Static Load : | 23.6 KN |
| **Moment** | |
| Motor Dynamic Moment : | 75.06 N.m |
| Pump Dynamic Moment : | 14.9 N.m |
| Total Dynamic Moment : | Mx: 0<br>My: 89.96 N.m<br>Mz: 0 |

**NOZZLE LOADS**

| | FORCE N 3x API (16") | | | | MOMENTS Nm 3x API (16") | | | |
|---|---|---|---|---|---|---|---|---|
| | Fx | Fy | Fz | Fa | Mx | Mr | Mz | Ma |
| SUCTION : | 25350 | 30690 | 20010 | 44550 | 21960 | 10980 | 16260 | 29460 |
| DISCHARGE : | 16900 | 20460 | 13340 | 29700 | 14640 | 7320 | 10840 | 19640 |

**FOUNDATION LOADS (approx. weight)**

| | | |
|---|---|---|
| PUMP : | 2200 | Kg |
| ROTOR PUMP : | 153 | Kg |
| MOTOR : | 2300 | Kg |
| ROTOR MOTOR : | 400 | Kg |
| BASE PLATE&SEALING SYSTEM : | 1860 | Kg |
| TOTAL : | 6360 | Kg |

VIBRATION LEVEL (ISO 2372)
Alarm : V(RMS) > 3 mm/sec
Trip : V(RMS) > 4.5 mm/sec

Max allowable vibration amplitude for foundation: 28.6 μm

Max.MISSALIGNMENT

AXIAL 1.5 (mm) RADIAL 1.2 (mm) ANGULAR 0.5 (degree)

PUMP NOZZLES: ASME B16.5

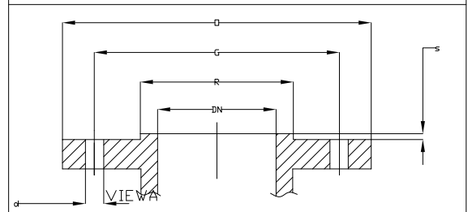


Flange Raised Face Roughness 125~250 AARH

| ELECTRICAL MOTOR | | | |
|---|---|---|---|
| MODEL : | SCHORCH | PHASE : | 3 |
| FRAME : | 355 | VOLTAGE : | 6600 |
| KW : | 185 | Hz : | 50 |
| Speed: | 1487 RPM | | |

Pump Type: BB1 500-400-360

Sealing System Plan: 11

COUPLING & Coupling Guard
COUPLING MANUFACTURER: IIP Group
MODEL : Flexible Spacer Type

| Code | | |
|---|---|---|
| Code1 | ☐ | *Approved:* No comment and the document is released for Manufacturing. |
| Code2 | ■ | *Approved with Minor comment:* Vendor shall correct, revise and resubmit the document. The document can be released for Manufacturing if changes incorporated. |
| Code3 | ☐ | *Commented:* Vendor shall correct, revise and resubmit the document by the date specified. The document shall be revised under the Status of "R: Revised Issue". All corrected documents shall be resubmitted before starting the Manufacturing. |
| Code4 | ☐ | *Not Accepted (Rejected):* Vendor shall re-work/re-design/re-specify the contents of the documents according to the comments/ reasons for rejection. All corrected documents shall be resubmitted before starting the Manufacturing process. In this case vendor shall not proceed with subsequent work until receiving code 1 or code 2 or no code from CONSULTANT / OWNER / MC. VENDOR shall resubmit the documents with the same revision within (10) working days(including transmission/mailing time) after receiving the commented documents from CONSULTANT / OWNER / MC. |
| No Code | ☐ | *No Code( Only for" FOR INFORMATION" documents and "As-Built DWGs"* Document has been submitted for CONSULTANT / OWNER / MC's information(FI) consistency, completeness and correctness of documents content is in VENDOR/EPC contractor responsibility. |

Above checking results by EIED shall in no way relieve Vendor of any liability, obligation and responsibility out of the purchase order and the mutual agreement in writing.

EIED
DATE : 28.06.2022
DEPT. : MA
Signature : S.Razani

Only for internal review

| CV | PI | EL | IN | ME | MA |
|---|---|---|---|---|---|
| ST | AR | PR | SA | HV | TL |

Mass Moment inertia Motor : 4.7 $kgm^2$

Mass Moment inertia Pump: 1.716 $kgm^2$

| POS. | Q. | DN | CONNTYPE | DESCRIPTION | D | G | No. of holes | d | R | S |
|---|---|---|---|---|---|---|---|---|---|---|
| N1 | 1 | 20" | ASMEB16.5 #300 RF | Suction Nozzle | 775 | 685.8 | 24 | 35 | N/A | N/A |
| N2 | 1 | 16" | ASMEB16.5 #300 RF | Discharge Nozzle | 648 | 571.5 | 20 | 35 | N/A | N/A |
| N4 | 1 | 2" | NPT threaded | Base Plate Drain | | | | | | |
| V1 | 1 | 3/4" | Ball valve #800 | Pump Vent Valve(By Vendor) | | | | | | |
| F | 1 | 3/4" | ASMEB16.5 #300 RF | Vent Flange(By Vendor) | 117 | 82.6 | 4 | 19 | 42.9 | 1.6 |

Repeated comment:
Unit of dynamic load location shall be specified.

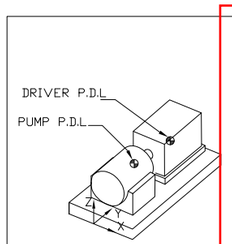


| Dynamic Load | | |
|---|---|---|
| PUMP | X | 0 |
| | Y | 1403 |
| | Z | 1150 |
| DRIVER | X | 0 |
| | Y | 2712 |
| | Z | 1150 |
| TOTAL | X | 0 |
| | Y | 2072.3 |
| | Z | 1150 |

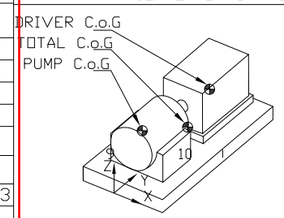


| CENTER OF GRAVITY | | ( mm ) |
|---|---|---|
| PUMP | X | 101 |
| | Y | 1041 |
| | Z | 1240 |
| DRIVER | X | 0 |
| | Y | 2881 |
| | Z | 1150 |
| BASE | X | 0 |
| | Y | 2077 |
| | Z | 181 |
| TOTAL | X | 34.9 |
| | Y | 2009.3 |
| | Z | 897.7 |

| REV. | DATE | STATUS | PURPOSE OF ISSUE | PREP. | CHKD. | APPD. | AUTH. |
|---|---|---|---|---|---|---|---|
| 05 | 21.Jun.2022 | R | Issue for Approval | A.K | M.B | M.M | GH.P |
| 04 | 10.Apr.2022 | R | Issue for Approval | A.K | M.B | A.N | GH.P |
| 03 | 28.Feb.2022 | R | Issue for Approval | A.K | M.B | A.N | GH.P |
| 02 | 24.Jan.2022 | R | Issue for Approval | A.K | M.B | A.N | GH.P |
| 01 | 01.Nov.2021 | R | Issue for Approval | A.K | M.B | A.N | GH.P |
| 00 | 04.Sep.2021 | F | Issue for Approval | M.B | S.G | A.N | GH.P |

EIED

Soroush Mahestan Asaloyeh Company
HDPE Project

IIP GROUP
IRAN INDUSTRIAL PUMPS CO.

**P.O DESCRIPTION: Centrifugal pumps**

Contract No. SMAC-H-19/ROL
P.O No. KP-40-000-PS-MA-PO-0011
SCALE: None

DRAWING TITLE:
General Arrangement Drawing for 40-P-205

| DRAWING NO. | REV. | SHEET No. | SIZE |
|---|---|---|---|
| VP-40-000-MA-0011-0060 | 05 | 1 OF 1 | A3 |

This document is the sole property of Soroush Mahestan Asaloyeh Co. and all information contained herein may neither be reproduced, used, disclosed, transmitted nor in any way made public without permission of the Owner.