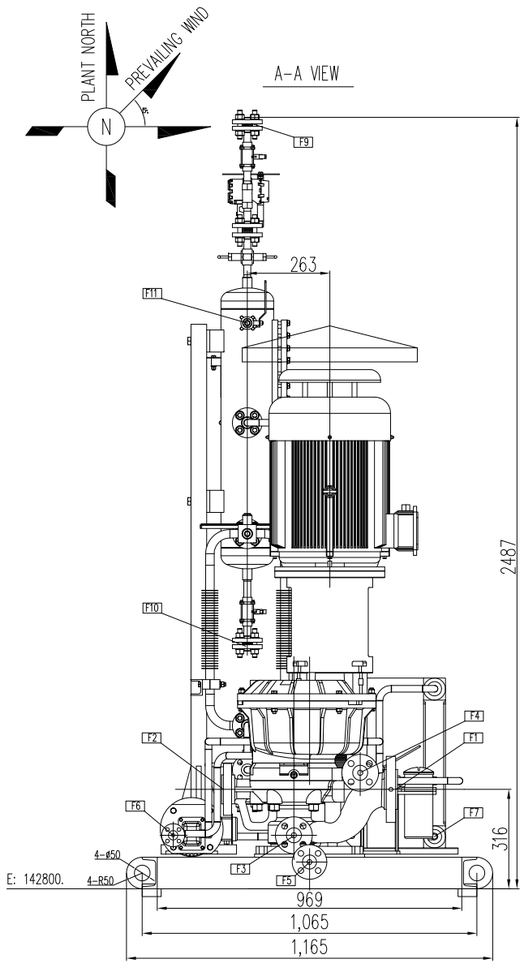

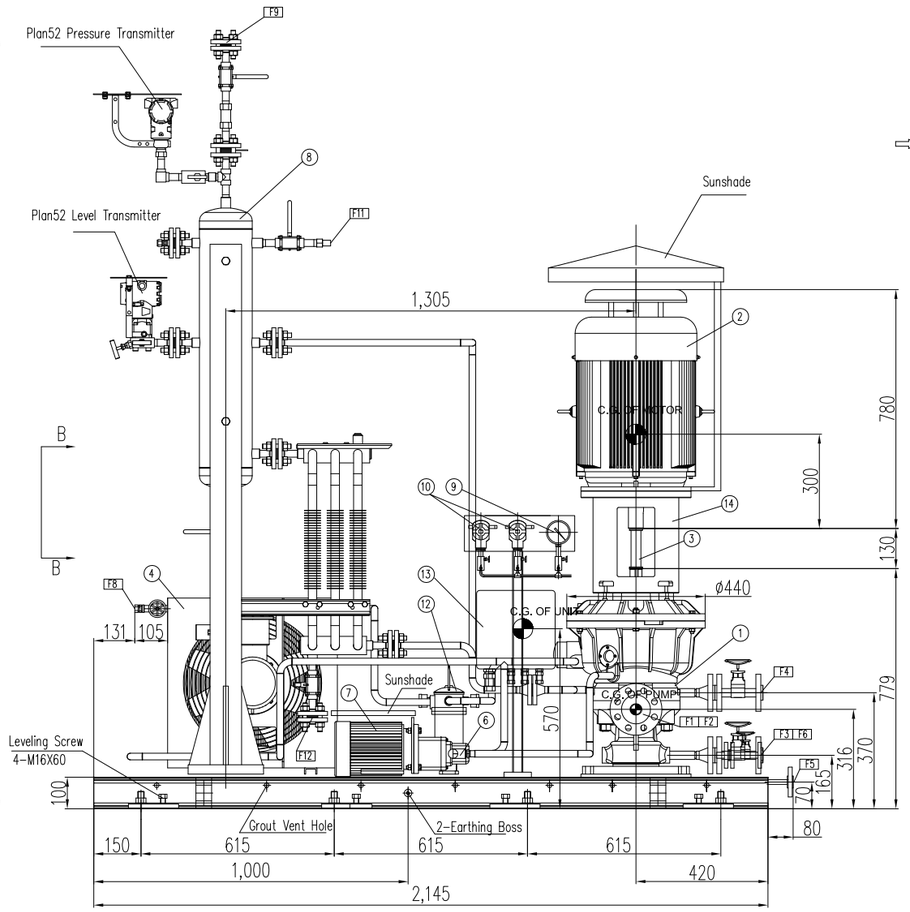

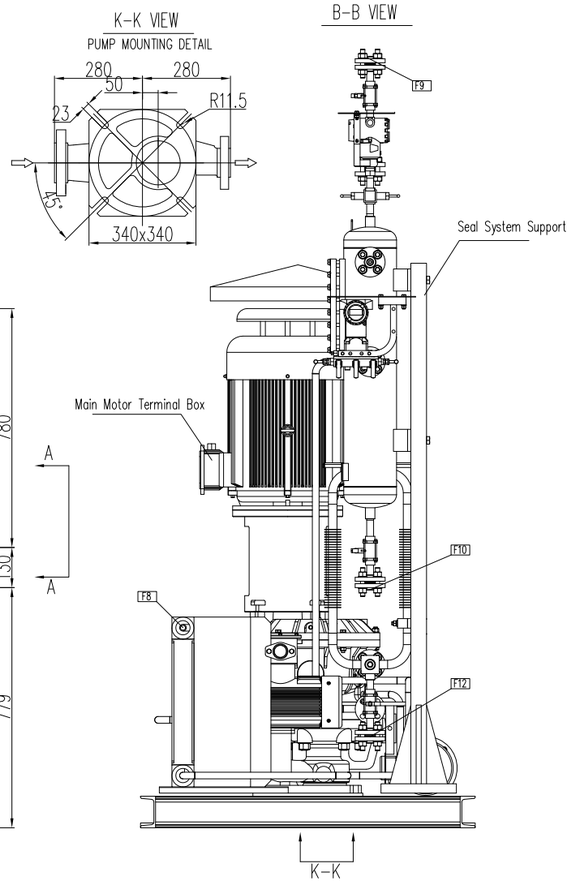

REFERENCE DRAWING	DWG. NO.
MECH. SEAL SYSTEM DRAWING	NGL-V-0005-ME-DW-2005
MOTOR OUTLINE DRAWING	NGL-V-0005-ME-DW-2007
COUPLING DRAWING	NGL-V-0005-ME-DW-2006
PUMP DATA SHEET	NGL-V-0005-ME-DT-2021
PUMP CROSS SECTION DRAWING	NGL-V-0005-ME-DW-2003
PUMP P&ID	NGL-V-0005-ME-PD-2030

PUMP INFORMATION	
Item No.:	P-3112-02 A/S
Service:	Condensate Transfer Pumps
Model:	EGS-L2-7/229
Seal Plan:	13+52
Flow/Head:	6.6m3/h & 229m
Motor:	15KW - 2P
Rotation:	Clockwise viewed from the drive-end
No of Stages:	1
Speed:	10255 rpm

Code1	☐ (Approved): No comment and release for Manufacturing (Document to be stamped as Final for considering in Vendor Data Book)
Code2	☐ (Approved with Comments): VENDOR/Sub-Contractor shall correct/revise document and issue it as "FOR APPROVAL" (Work May Be Proceeded)
Code3	☐ (Commented): VENDOR/Sub-Contractor shall correct /revise and resubmit it as "FOR APPROVAL" of the date documents specified (Corrected to be resub-mitted before starting to manufacture.
No Code	☐ CONSULTANT and PURCHASER check results on Class 2 documents will be returned without any CODE. VENDOR/Sub-Contractor shall correct/revise document and issue it as "FOR INFORMATION"

The above checking result by OIEC shall in no way relieve Vendor of any liability, obligation and responsibility out of the purchase order and the mutual agreement in writing

OIEC ...building trust شرکت مهندسی و ساختمان صنایع هفت

DATE :
DEPT:
Signature :

Notes: PCV discharge line location against fig B8 of API610 is as manufacturer standard configuration.

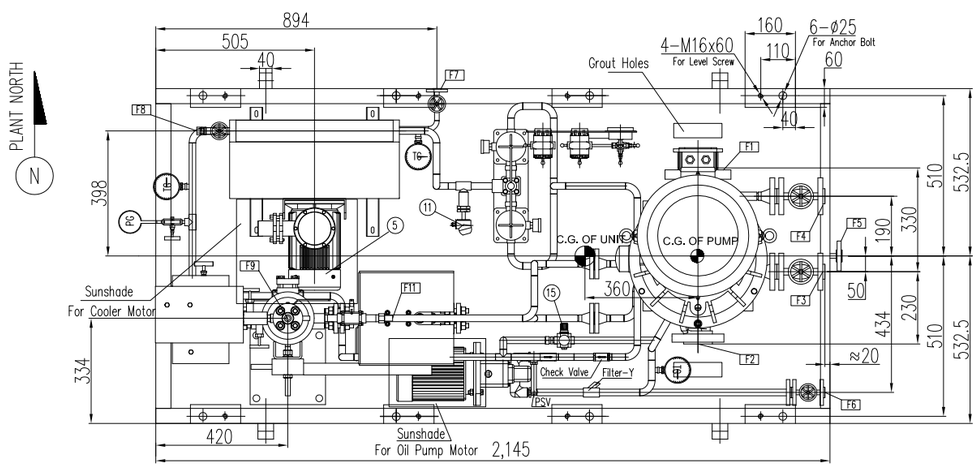

CODE	NAME	DESCRIPTION
15	Pressure Control Valve	To stabilize Oil Pressure.
14	Coupling Guard	Non-sparking.
13	Junction Box	WAROM make.
12	Dual Oil Filter	
11	Temperature Transmitter	For Lube Oil
10	Two Pressure Transmitter	For Lube Oil
9	Pressure Gauge	For Lube Oil
8	Plan52 System	Sunny Seal make.
7	Aux. Lube Oil Motor	Nanyang, 0.75KW-4P, 400V / 3PH / 50HZ, IP55, ExdIIBT4
6	Aux. Lube Oil Pump	
5	Cooler Fan Motor	Nanyang, 0.75KW-4P, 400V / 3PH / 50HZ, IP55, ExdIIBT4
4	Lube Oil Heat Exchanger	Cooling Fan Type
3	Coupling (TRUMY Maker)	Coupling Guard Material: AL.
2	Main Motor	Nanyang, 15KW-2P, 400V / 3PH / 50HZ, IP55, ExdIIBT4
1	High Speed Pump	Supplied By Deep Blue Pump Co.

MAIN EQUIPMENT LIST

PROCESS CONNECTIONS((TIE IN POINT LIST))			
Code	Size & Rating	Description	Remark
F1	3"-ANSI 600Lb-RF	Suction	
F2	2"-ANSI 600Lb-RF	Discharge	
F3	3/4"-ANSI 600Lb-RF	Casing Drain	Flange with Valve (Support)
F4	3/4"-ANSI 600Lb-RF	Casing Vent	Flange with Valve (Support)
F5	1"-ANSI 150Lb-RF	Skid Drain	Flanged
F6	1/2"-ANSI 150Lb-RF	Oil Sump Drain	Flange with Valve
F7	1/2"-ANSI 150Lb-RF	Oil Cooler Drain	Flange with Valve
F8	1/2" Tube	Oil Cooler Vent	
F9	1/2"-ANSI 600Lb-RF	Plan52 Vent(To Flare)	Flange with Valve
F10	1/2"-ANSI 600Lb-RF	Plan52 Drain	Flange with Valve
F11	1/2"-Quick Fitting	Plan52 Filling	Quick Connection
F12	1/2"-ANSI 600Lb-RF	Plan52 Cooler Drain	Flange with Valve

WEIGHT	
Total	780
Skid weight	300
Aux. weight	150
Motor weight	150
Pump weight	180

SEAL HOUSING PORT IDENTIFICATION

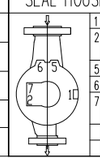

1	Seal Drain,Gearbox Oil(ALWAYS OPEN)
2	Seal Drain(Single Seal)
	Buffer Out(Double/Tandem Seal)
5	Seal Vent
6	Seal Flush
7	Seal Drain(Single Seal)
	Buffer In(Double/Tandem Seal)

EARTHING BOSS&LEVEL BOLT

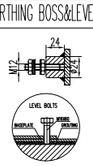

ANCHOR BOLT DETAILS

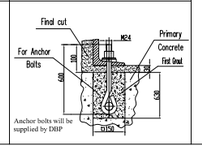

Static loading calculation results		
FXstatic=	3560/-3560	N
FYstatic=	4440/-4440	N
FZstatic=	-4709/-10589	N
MXstatic=	5046/-5046	N*m
MYstatic=	5207/-3677	N*m
MZstatic=	6032/-6032	N*m

Dynamic loading calculation results		
FXdynamic=	15/-15	N
FYdynamic=	15/-15	N
FZdynamic=	0/0	N
MXdynamic=	8/-8	N*m
MYdynamic=	-8/8	N*m
MZdynamic=	50/-2	N*m

Location of Loads & Moments Calculation is the geometric center of baseplate lower surface.

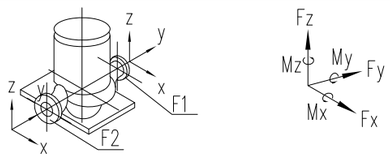

DISCHARGE	2"	±1420	±1780	±1160	±920	±460	±700
SUCTION	3"	±2140	±2660	±1780	±1900	±940	±1440
FLANGE	SIZE	Fx	Fy	Fz	Mx	My	Mz
		Force (N)			Moment (N*m)		

Nozzle Allowable Force & Moment

Deep Blue DBP

P.O. NO.: NGL-CT-1-0000-ME-PO-0005-D0

REV.	DATE	DESCRIPTION	PREP.	CHECK	APPROVAL	OIEC APP.
D6	24.Sep.2019	ISSUED FOR APPROVAL	ERIC	CHERRY	TINO	A. ALIPOUR
D5	17.Aug.2019	ISSUED FOR APPROVAL	ERIC	CHERRY	TINO	A. ALIPOUR
D4	01.Aug.2019	ISSUED FOR APPROVAL	ERIC	CHERRY	TINO	A. ALIPOUR
D3	29.Jun.2019	ISSUED FOR APPROVAL	ERIC	CHERRY	TINO	A. ALIPOUR
D2	03.Jun.2019	ISSUED FOR APPROVAL	ERIC	CHERRY	TINO	A. ALIPOUR
D1	30.Apr.2019	ISSUED FOR APPROVAL	ERIC	CHERRY	TINO	A. ALIPOUR
D0	01.Feb.2019	ISSUED FOR APPROVAL	ERIC	CHERRY	TINO	B. KHODADADEH

CONTRACTOR

Project Title:

NGL 3100 PROJECT

Contractor:

OIEC ...building trust شرکت مهندسی و ساختمان صنایع هفت

SATUS CODE: A=Comment/Review B=Approval C=Final Issue

Pump General Arrangement Drawing For Condensate Transfer Pumps
P-3112-02 A/S

OWNER DRAWING NUMBER

Project Name	Originator	PO Serial No.	Disc.	Doc. Type	Seq No.	Rev.	Sheet No.	Status	Class	Size
NGL	V	0005	ME	DW	2001	D6	1 OF 1	B	1	A3

OIEC DRAWING NUMBER

Project Code	Source	Unit & Section	Phase	Disc.	Doc. Type	Serial No.	Rev.

This document is the property of OIEC. It is confidential and all rights reserved. Neither the whole nor part of this document may be disclosed to any third party, reproduced, stored in any retrieval system or transmitted in any form or by any means without the prior written consent of OIEC. Contract No.: NGL-CT-1-0000-ME-PO-0005-D0 Date: 10-Apr-2018