DRAWING NO.	REV.
DEK038422	04

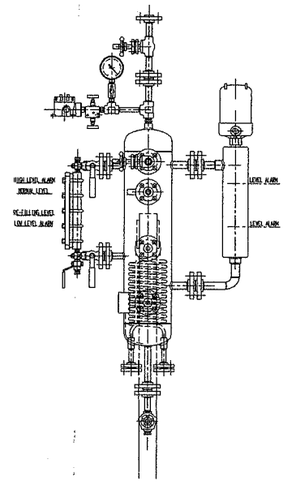

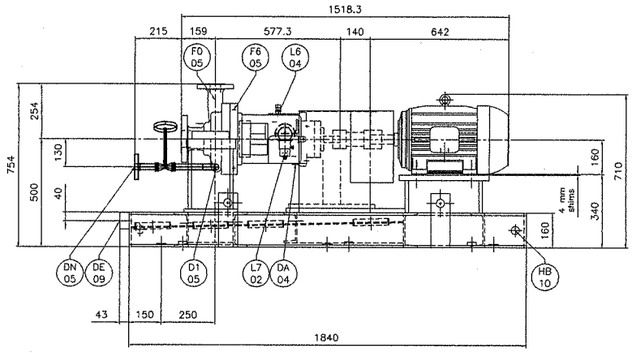

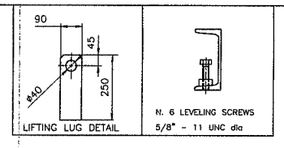

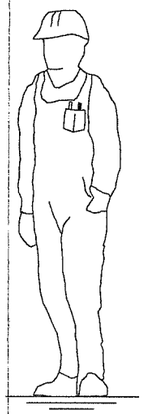

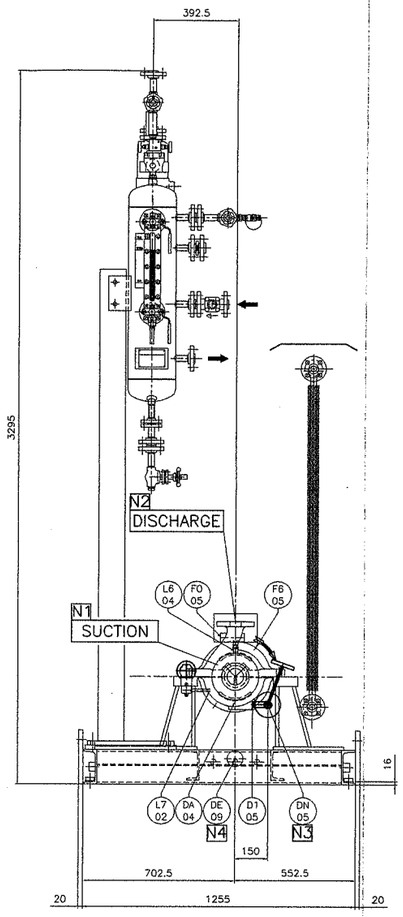

CENTERS OF GRAVITY		(mm)
PUMP	X	495
	Y	−10
	Z	520
DRIVER	X	1367.3
	Y	0
	Z	520
TOTAL	X	1150
	Y	−2
	Z	364

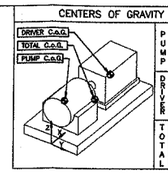

Aux.Piping Slope as per API 682

Rev.	Date	Description	Drw.	Chk'd	App.
04	20.02.07	REVISED	FJZ	JKR	SW
03	19/04/2006	REVISED	G.A.	R.G.	F.R.
02	18/01/2006	API PLAN 52 REVISED	G.A.	R.G.	F.R.
01	18/11/2005	API PLAN 52 REVISED	G.A.	R.G.	F.R.
00	11/07/2005	FIRST ISSUE	G.A.	R.G.	F.R.

REVISIONS
FOR FPD INTERNAL USE ONLY

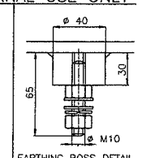

EARTHING BOSS DETAIL

FLUSHING LINE API PLAN 11 (Sketch)

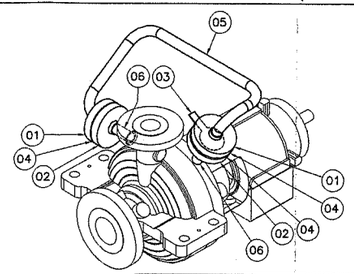

ITEM	DESCRIPTION	Q.ty	MATERIAL	NOTES
06	Pipe 3/4"		AISI 316L	sch.160
05	Pipe 3/4"		AISI 316L	sch.80
04	Gasket	3	S.STEEL/ASB.FREE	
03	Orifice 3.1 dia	1	AISI 316L	
02	Flange 3/4" ANSI 600 RF S.W.	2	AISI 316L	sch.160
01	Flange 3/4" ANSI 600 RF S.W.	2	AISI 316L	sch.80

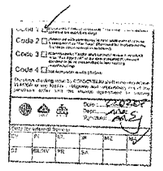

SELF VENTING PUMP
ALL FLANGE HOLES STRADDLE CENTERLINE
ALL FLANGES WILL BE SMOOTH FINISH 125–250 AARH

	SUCTION 3" dia ASME 300 RF mm	DISCHARGE 2" dia ASME 300 RF mm
DB Nominal Bore Dia.	78	52
OD Outside Flange Dia.	210	165
BC Bolt Circle Dia.	168.3	127
NF Number of Holes	8	8
DF Holes Diameter	22.2	19
RF Raised Face Dia.	127	92.1
TK Raised Face Thick.	2	2
TF Flange Thick.	27	20.7

El.Motor :
Type : 160L
HZ:50 KW:18.5 PHASE: 3 V : 400 RPM : 2955
ENCL/FRAME: DWG:

Coupling METASTREAM
Type : TSKS0013
with non sparking guard Material : Aluminium

ALL PIPINGS / TUBES WILL BE ADEQUATELY SUPPORTED AT ASSEMBLY

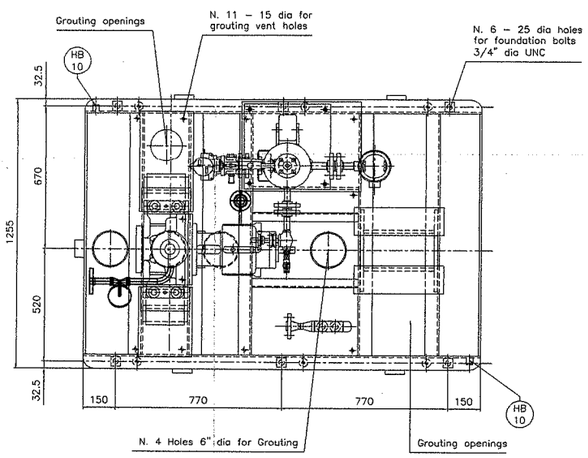

FLUSHING LINE API PLAN 52 (Sketch)

FOR PLAN52 DETAILS SEE DWG : A1N56067

FOR MECH.SEAL DETAILS SEE DWG : DCT003819

FOR FINNED AIR DETAILS SEE DWG : A2N56720

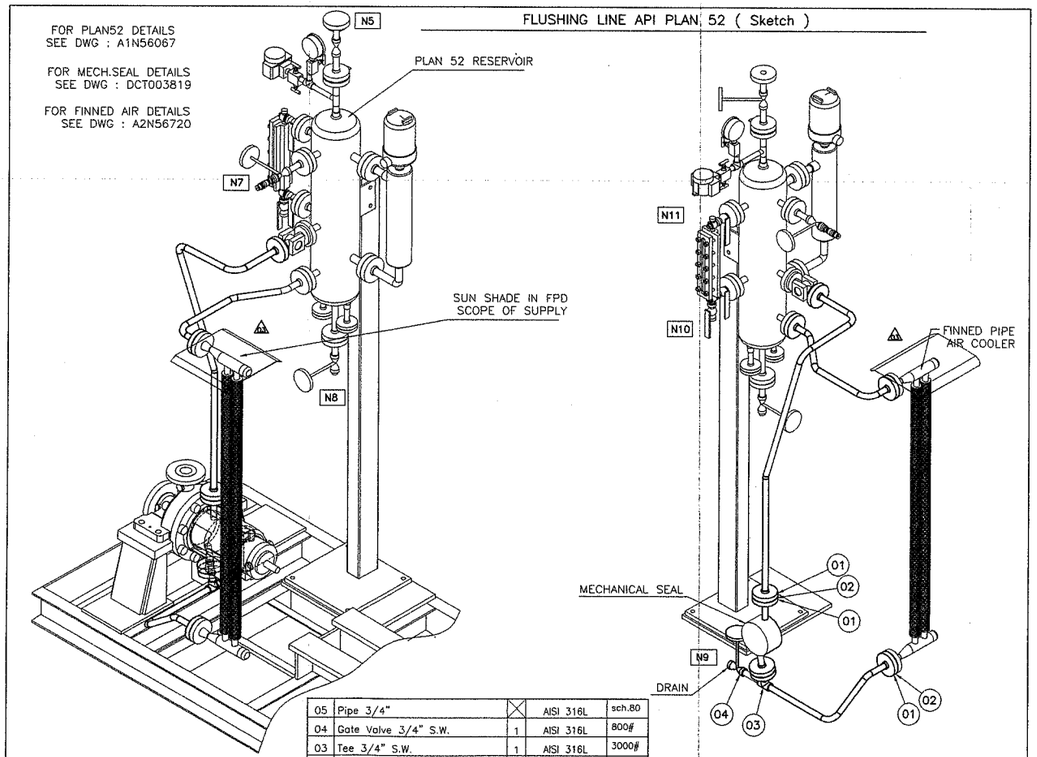

ITEM	DESCRIPTION	Q.ty	MATERIAL	NOTES
05	Pipe 3/4"	X	AISI 316L	sch.80
04	Gate Valve 3/4" S.W.	1	AISI 316L	800#
03	Tee 3/4" S.W.	1	AISI 316L	3000#
02	Gasket	6	S.STEEL/ASB.FREE	
01	Flange 3/4" ANSI 600 RF S.W.	8	AISI 316L	sch.80

Item	POS	Q.	CONN.TYPE	DESCRIPTION
	D1 05	1	3/4" S.W.	Case Drain
	DA 04	1	1/2" NPT	Support Frame Oil Drain
N2		1	2" ANSI300RF	DISCHARGE
		1	3" ANSI300RF	SUCTION
	DE 09	1	2" NPT	Baseplate Drain
N3	DN 05	1	3/4" ASME 300 RF	Drain with Gate Valve & Term.Flange (Mat.: C.Steel)
	HB 10	2	M10	Earth. Bosses on opposite side
	L6 04	1	1/2" NPT	Breath.& Oil Filling Hole
	F0 05	1	3/4" S.W.	Flushing Outlet API PLAN 11
	F6 05	1	3/4" S.W.	Flushing Inlet API PLAN 11
	L7 02	1	1/4" NPT	Constant Level Oiler

RESERVOIR CONNECTIONS				
POS	Q.	CONN.TYPE	DESCRIPTION	
N5	1	3/4" ANSI 600 RF	VENT / FLARE	
N6	1	3/4" ANSI 600 RF	NITROGEN INLET	
N7	1	1/2" NPT	FILLING	
N8	1	3/4" NPT	DRAIN	
N9	1	3/4" S.W.	DRAIN PLAN 52	
N10	1	1/2"NPT	LG DRAIN – DRAIN PLUGGED	
N11	1	1/2"NPT	LG VENT – DRAIN PLUGGED	

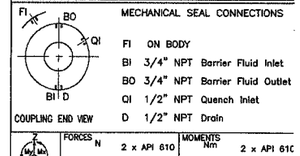

MECHANICAL SEAL CONNECTIONS

FI	ON BODY
BI	3/4" NPT Barrier Fluid Inlet
BO	3/4" NPT Barrier Fluid Outlet
QI	1/2" NPT Quench Inlet
D	1/2" NPT Drain

	FORCES N 2 x API 610				MOMENTS Nm 2 x API 610			
	Fx	Fy	Fz	Fr	Mx	My	Mz	Mr
DISCHARGE	1420	1160	1780	2560	920	460	700	1240
SUCTION	2660	2140	1780	3860	1900	940	1440	2560

FOUNDATION LOADS (approx. Weight)

PUMP :	KG .	142
BASE & COUPL :	KG .	425
MOTOR :	KG .	135
TOTAL :	KG .	702

DYNAMIC LOADS ARE NEGLIGIBLE

CROSS SECTION	DWG: DCE000173
MECHANICAL SEAL	FLOWSERVE API CODE BTAIN
TYPE : QBW/QBW–2825/2500–5UHX/5UHX	DWG: DCT003819
FLUSHING LINE	API PLAN 11/52/61
COOLING LINE	N.A.
CONTRACT No.	PGGC–760–81–156
PROJECT	SOUTH PARS GAS DEVELOPMENT
SITE	ASSALUYEH PERSIAN GULF
SERVICE	LEAN MEG BOOSTER PUMPS
ITEM	102–P–103 A/B
SERIAL N.	D65044/5

FOR APPROVAL

FLOWSERVE Pump Division

DRWG. No.: P714604
REV./02
05HY0582/83

CUSTOMER'S NOZZLES POSITION TOLERANCES
ALL CUSTOMER CONNECTIONS LOCATIONS DIMENSIONS HAVE A TOLERANCE OF ±50.8 (2 inch) EXCEPT FOR THE PUMP SUCTION AND DISCHARGE NOZZLES WHICH HAVE A TOLERANCE OF ±6.4 (.25 inch)

BASEPLATE TOLERANCES ACCORDING TO API 610 Annex D

TOLERANCES UNLESS OTHERWISE SPECIFIED			
MM		IN	
.X	± 0.5	.X	± .5
.XX	± 0.25	.XX	± .25
.XXX	± 0.05	.XXX	± .125
.XXXX	± 0.005	.XXXX	± .0625

STATUS OF APPROVAL: CERTIFIED
ORDER No. 20050FLE0234171
DRAWN BY Sinpromsarta A. 11.07.05
CHECKED BY Prasanti C. 11.07.05
APPROVED BY Kishore R. 11.07.05
Extracted K191130000
Supersedures
CAD File : A2D05FLE0234171K1

1st Angle Projection

PROPRIETARY NOTE
THIS DRAWING IS THE PROPERTY OF Flowserve Corporation, Inc. IT IS SUBMITTED FOR THE USE OF FLOWSERVE CUSTOMERS AND FOR THE PURPOSE OF OBTAINING QUOTATIONS, ORDERS, OR APPROVAL. IT IS NOT TO BE REPRODUCED OR TRANSMITTED TO ANY OTHER PERSON OR ORGANIZATION FOR ANY OTHER PURPOSE WITHOUT WRITTEN PERMISSION. ANY REPRODUCTION OR TRANSMISSION, IN WHOLE OR IN PART, MUST INCLUDE THIS NOTICE.

CUSTOMER INFORMATION

FLOWSERVE Pump Division Duties Operation

DWG TITLE
2HPX9A
CENTRIFUGAL PUMP
GENERAL ARRANGEMENT

SIZE	DRAWING NO.	REV.
A0	DEK038422	04

SCALE 1/10 UNITS metric SHEET NO. 1/1

FOUNDATION DETAIL

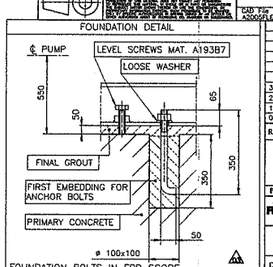

FOUNDATION BOLTS IN FPD SCOPE

Rev.	Date	Description	ORIGI	PRPD	CHFD	APP'D	Contractor Approval
3	20.02.07	FOR APPROVAL		FJZ	JKR	SW	
2	19.04.06	REVISED		G.A.	R.G.	F.R.	
1	18.01.06	REVISED		G.A.	R.G.	F.R.	
0	11/07/2005	FIRST ISSUE		G.A.	R.G.	F.R.	

SOUTH PARS GAS FIELD DEVELOPMENT - PHASES 9&10, ASSALUYEH - IRAN ONSHORE FACILITIES

M.E.O.C. Pars Oil & Gas Company

Project No. : PGGC-760-81-156 | Doc. Class : | Scale :

FLOWSERVE | GEDC

TITLE: LEAN MEG BOOSTER PUMPS 102-P-103 A/B GENERAL ARRANGEMENT

DRAWING No. VP-4340-102-P103-041 | SHT No. 1 of 1 | Rev. 3