REFERENCE DRAWING	DWG. NO.
MOTOR OUTLINE DRAWING	NGL-V-0014-ME-DW-6008
COUPLING DRAWING	NGL-V-0014-ME-DW-6007
PUMP DATA SHEET	NGL-V-0014-ME-DT-6012
PUMP CROSSSECTION DRAWING	NGL-V-0014-ME-DW-6005
PUMP P&ID	NGL-V-0014-ME-PD-6016

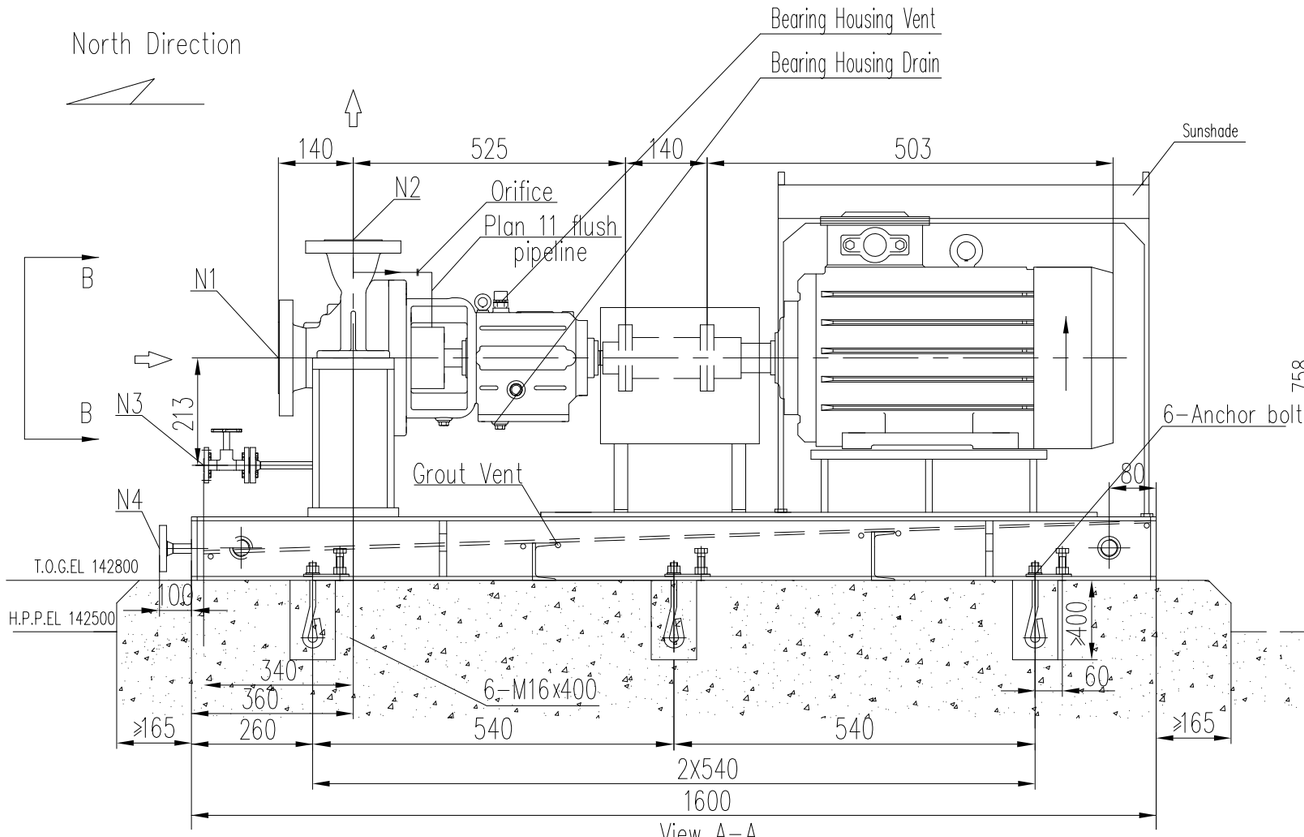

View A-A

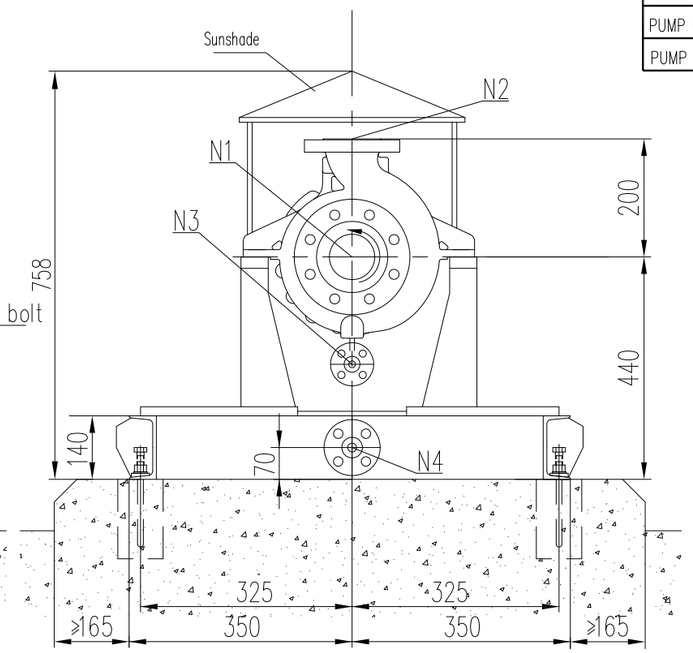

View B-B

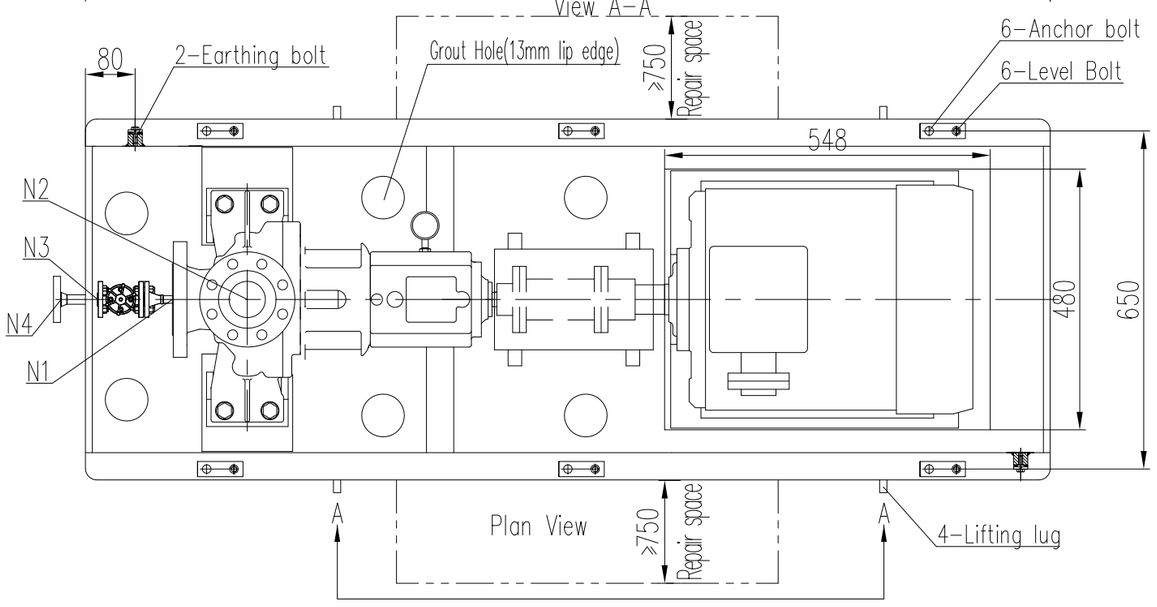

Plan View

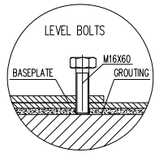

Note:
1. The weight of maximum maintenance part is 67.7 kg(Assembled bearing housing)
2.Leveling pads(SS) willl be supplied by vendor (qty.=anchor bolt qty)

PUMP INFORMATION	
Item No.:	P-3184-01
Service:	Fuel oil Loading Pump
Model:	EAP 40-201-35-I
Seal Plan:	11+61
Flow/Head	12.7m3/h & 9.4m
Motor:	4KW - 4P
Rotation:	Clockwise viewed from the drive-end
No of Stages:	1

Code1	☐	(Approved): No comment and release for Manufacturing (Document to be stamped as Final for considering in Vendor Data Book)
Code2	☐	(Approved with Comments): VENDOR/Sub-Contractor shall correct/revise document and issue it as "FOR APPROVAL" (Work May Be Proceeded)
Code3	☐	(Commented): VENDOR/Sub-Contractor shall correct /revise and resubmit it as "FOR APPROVAL" of the date documents specified (Corrected to be resub-mitted before starting to manufacture.
No Code	☐	CONSULTANT and PURCHASER check results on Class 2 documents will be returned without any CODE. VENDOR/Sub-Contractor shall correct/revise document and issue it as "FOR INFORMATION"

The above checking result by OIEC shall in no way relieve Vendor of any liability, obligation and responsibility out of the purchase order and the mutual agreement in writing

OIEC ...building trust شرکت مهندسی و ساختمان صنایع نفت

DATE :
DEPT:
Signature :

Static loading calculation results		
FXstatic=	4080/-4080	N
FYstatic=	3300/-3300	N
FZstatic=	-1322/-8442	N
MXstatic=	4418/-4418	N*m
MYstatic=	5902/-5754	N*m
MZstatic=	4486/-4486	N*m

Dynamic loading calculation results		
FXdynamic=	0/0	N
FYdynamic=	9/-9	N
FZdynamic=	9/-9	N
MXdynamic=	30/23	N*m
MYdynamic=	5/-5	N*m
MZdynamic=	5/-5	N*m

Note:
Location of Loads & Moments Calculation is the geometric center of baseplate lower surface.

LIFTING INFORMATION

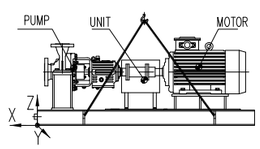

Pump	AX	442
	AY	0
	AZ	425
Motor	BX	1285
	BY	0
	BZ	430
Unity	CX	950
	CY	0
	CZ	260

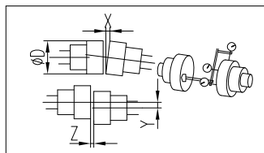

D≤200	X	≤0.05
	Y	≤0.05
	Z	Z±0.1
200<D≤300	X	≤0.08
	Y	≤0.08
	Z	Z±0.15
300<D≤400	X	≤0.10
	Y	≤0.10
	Z	Z±0.2

Nozzle load,Force(N)/Moment(N.m)

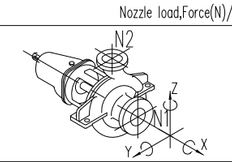

		Fx	Fy	Fz
DN1		2660	2140	1780
		Mx	My	Mz
		1900	940	1440
DN2		Fx	Fy	Fz
		1420	1160	1780
		Mx	My	Mz
		920	460	700

NGL-CT-1-0000-ME-PO-0014-D0

REV.	DATE	DESCRIPTION	PREP.	CHECK	APPROVAL	OIEC APP.
D5	26.3.19	ISSUED FOR APPROVAL	N.Z	T.H	R.C	B.KHODADADEH
D4	6.3.19	ISSUED FOR APPROVAL	N.Z	T.H	R.C	B.KHODADADEH
D3	23.2.19	ISSUED FOR APPROVAL	N.Z	T.H	R.C	B.KHODADADEH
D2	22.1.19	ISSUED FOR APPROVAL	N.Z	T.H	R.C	B.KHODADADEH
D1	20.12.18	ISSUED FOR APPROVAL	N.Z	T.H	R.C	B.KHODADADEH
D0	03.09.18	ISSUED FOR APPROVAL	N.Z	T.H	R.C	B.KHODADADEH
			Contractor			

Project Title:
NGL 3100 PROJECT

Contractor:
OIEC ...building trust شرکت مهندسی و ساختمان صنایع نفت

STATUS CODE: A=Comment/Review B=Approval C=Final Issue

Pump General Arrangement Drawing For Fuel oil Loading Pump P-3184-01

OWNER DRAWING NUMBER

Project Name	Originator	PO Serial No.	Disc.	Doc. Type	Seq No.	Rev.	Sheet No.	Status	Class	Size
NGL	V	0014	ME	DW	6003	D5	1 OF 1	B	1	A3

OIEC DRAWING NUMBER

Project Code	Source	Unit & Section	Phase	Disc.	Doc. Type	Serial No.	Rev.

WEIGHT	
Total	496
Skid weight	240
Aux. weight	0
Motor weight	115
Pump weight	141

Anchor Bolt Detail

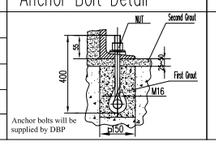

Earthing bolt detail

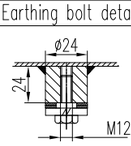

PUMP END

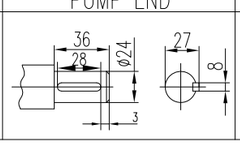

LIFTING LUG

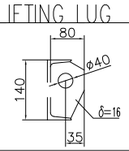

NO.	Nozzle	Sign	NPS	Standard	Rating	Face
4	Baseplate Drain	N4	1"	ASME B16.5-09	Class150	RF
3	Pump Drain	N3	3/4"	ASME B16.5-09	Class300	RF
2	Pump Discharge	N2	1 1/2"	ASME B16.5-09	Class300	RF
1	Pump Suction	N1	3"	ASME B16.5-09	Class300	RF

This document is the property of OIEC. It is confidential and all rights reserved. Neither the whole nor part of this document may be disclosed to any third party, reproduced, stored in any retrieval system or transmitted in any form or by any means without the prior written consent of OIEC. Contract No.: NGL-CT-1-0000-ME-PO-0014-D0 Date: 10-Apr-2018