PROCESS CONNECTIONS			
Code	Size & Rating	Description	Remark
N1	1 1/2"-ANSI 300Lb-RF	Discharge	
N2	3/4"-ANSI 300Lb-RF	External casing drain	Flange With valve
N3	3/4"-ANSI 300Lb-RF	Mechanical seal vent	Flange With valve
N4	3/4"-ANSI 150Lb-RF	Cooling Water Inlet	Blind Flange
N5	3/4"-ANSI 150Lb-RF	Cooling Water Outlet	Blind Flange
N6	3/4"-ANSI 300Lb-RF	N_2 Connection	Flange
N7	3/4"-ANSI 300Lb-RF	Plan53A Drain	Flange With valve
N8	1/2" Quick Fittings	Plan53A Filling	Quick Connection
N9	3/4"-ANSI 300Lb-RF	Plan53A Vent	Flange With valve
N10	3/4"-ANSI 300Lb-RF	Plan53A Cooler Drain	Flange With valve

Center of gravity List			
Item	X	Y	Z
Pump	0	0	-300
Motor	0	0	1590
Units	-31	0	50

MINIMUM CLEARANCE FOR MAINTENACE AND DISMANTLING (mm)

Wear Ring	Second Stage(front)		0.35~0.407
	Second Stage(behind)		0.35~0.399
Balance Disc / Balance Sleeve		Axial	0.1~0.15
		Radial	0.35~0.4
Shaft Bushing / Shaft Sleeve			0.2~0.26
Bearing / Cover			0.1~0.2

Pipeline Description	
Code	Description
1	Plan14 Flushing
2	External Casing Drain
3	Barrier Fluid Pipeline (from seal chamber)
4	Barrier Fluid Pipeline (to seal chamber)
5	Plan53A Drain
6	Plan53A Filling
7	Plan53A Vent
8	Plan53A Cooler Drain
9	N_2 Pipeline

WEIGHT TABLE			
PUMP	:	1160	KG
MOTOR	:	259	KG
SEAL SYSTEM	:	90	KG
MOUNTING PLATE	:	80	KG
COUPLING	:	5	KG
OTHERS	:	20	KG
TOTAL WEIGHT	:	1614	KG
ROTOR OF PUMP	:	135	KG
ROTOR OF MOTOR	:	37	KG
MAX. MAINTANCE WEIGHT	:	1160	KG

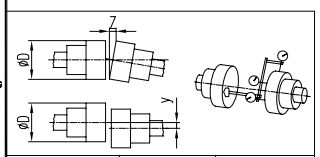

Outer Diameter Coupling (D)	Radial Displacement	Axial Tilt
D ≤ 200	< 0.05	< 0.2 / 1000
200 < D ≤ 300	< 0.08	< 0.3 / 1000
300 < D ≤ 400	< 0.1	< 0.4 / 1000

MAX. ALLOWABLE MISALIGNMENT(mm)

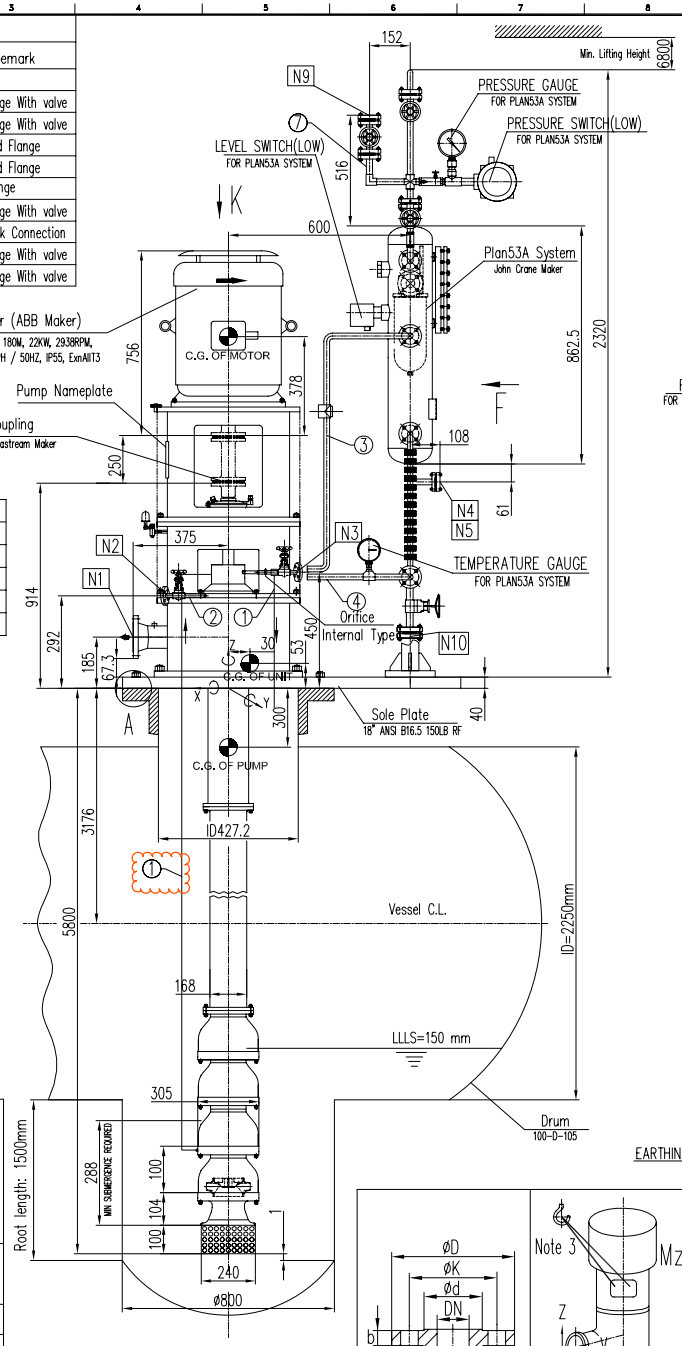

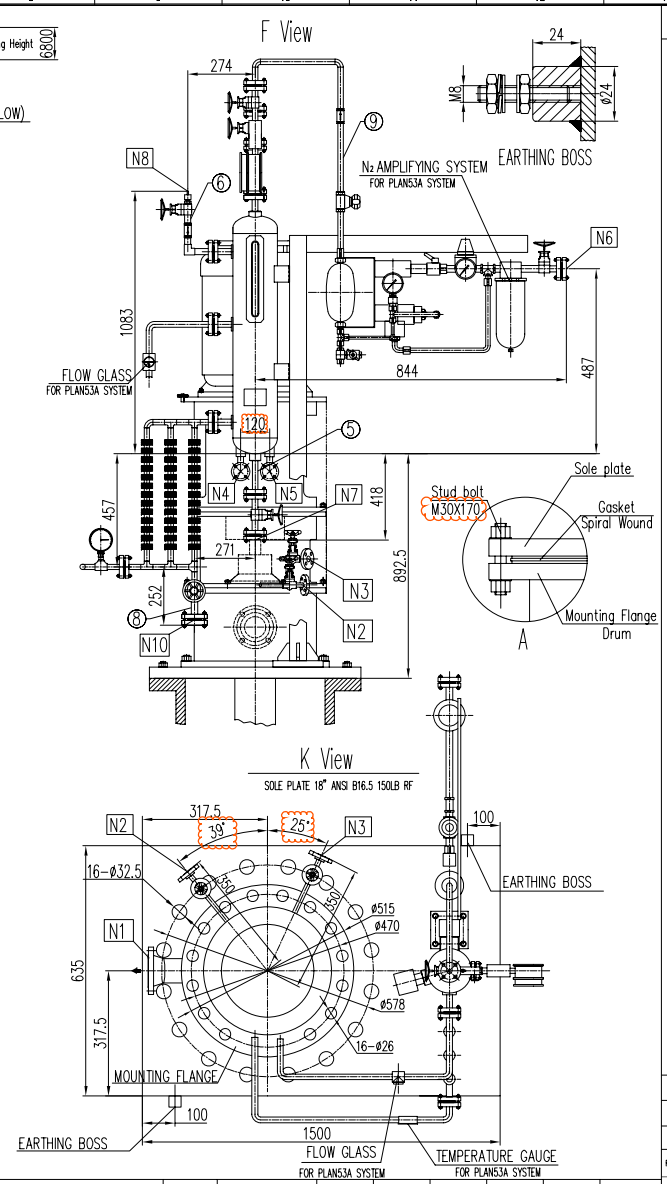

Name	Upper Shaft	Middle Shaft	Lower Shaft
Length(mm)	2057	1558	1428
Quantigy	1	2	1

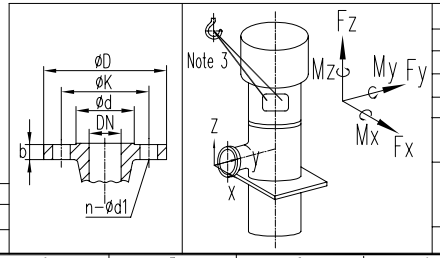

N3	ANSI B16.5 300lb RF	3/4"	117.3	15.7	82.5	42.9	4-ø18
N2	ANSI B16.5 300lb RF	3/4"	117.3	15.7	82.5	42.9	4-ø18
N1	ANSI B16.5 300lb RF	1 1/2"	155.4	20.5	114.3	73	4-ø22
Name	Standard	DN	ØD	b	ØK	Ød	n-Ød1

Flange Size(mm)

Discharge							
	1 1/2"	±1420	±1780	±1160	±920	±460	±700
	Inch	Fx	Fy	Fz	Mx	My	Mz
	DN	Force (N)			Moment (Nm)		

Nozzle Allowable Force & Moment

GENERAL NOTES

PUMP INFORMATION	
Item No.:	110-P-103
Unit:	110
Service:	SUMP DRUM PUMP
Model:	APIFLO-VB 20-35X4-V
Seal Plan:	14+53A+61
Motor:	22KW - 2P
Capacity:	15 m^3/h
Head:	106+5.885 m

Note: 1. Cable gland: 2XM40
Cable cores: 3X35 mm^2
2. Max. allowable working pressure: 40 barg
3. For lifting position, Deep Blue suggest: Through the motor frame.
4. For Suction Strainer:
1. mesh size: 8 mm;
2. pressure drop: 0.0032 m;
3. open ratio (open area/suction area): more than 390%.

REFERENCE DRAWINGS	DWG NO.
SEAL SYSTEM DRAWING	VP-SP2021-ON-MA-110-P103-0013
MOTOR OUTLINE DRAWING	VP-SP2021-ON-MA-110-P103-0016
COUPLING DRAWING AND BOM	VP-SP2021-ON-MA-110-P103-0008

Code1	■ (Approved) Vendor to submit "For Final (No comment & release for manufacturing)
Code2	☐ (Approved with comments) Vendor shall correct / revise & submit it as "For Final" (Released for manufacturing if change incorporated as indicated)
Code3	☐ (Commented) : Vendor shall correct / revise & resubmit . It as " For Approval" of the date specified : (Corrected documents to be
Code4	☐ Not Acceptable quality (Reject)

The above checking result by OIEC shall in no way relieve Vendor of any liability, obligation and responsibility out of the purchase order and the mutual agreement in writing

OIEC-SP 20&21 | DATE : 01-09-2013 | DEPT: Machinery | Signature S.Shahriarian

Only for internal review					
CV	PI	EL	IN	ME	MA
ST	BU	PR	SA	HV	TL

REV.	DATE	DESCRIPTION	ORIG.	PREP.	CH'D.	APP'D.	Contractor APP'D
4	8. Aug. 2013	FOR APPROVAL	DBP	Tino	Ryan		
3	15. May. 2013	FOR APPROVAL	DBP	Tino	Ryan		
2	9. Apr. 2013	FOR APPROVAL	DBP	Tino	Ryan		

SOUTH PARS GAS FIELD DEVELOPMENT-PHASES 20 & 21, ASSALUYEH-IRAN ONSHORE FACILITIES

NIOC PARS OIL AND GAS COMPANY

PROJECT No.: POGC-572-88-35 | DOC.CLASS: | SCALE :

DEEP BLUE PUMP CO. | OIEC

SUMP DRUM PUMP
110-P-103
GENERAL ARRANGEMENT DRAWING

DRAWING No. VP-SP2021-ON-MA-110-P103-0001 | SHEET No. 1 OF 1 | REV. 4