REFERENCE DRAWING	DWG. NO.
Seal System Drawing and BOM For Amine Drain Sump Pump P-3120-04	NGL-V-0014-ME-DW-7105
Motor Outline Drawing For Amine Drain Sump Pump P-3120-04	NGL-V-0014-ME-DW-7107
Coupling Drawing and BOM For Amine Drain Sump Pump P-3120-04	NGL-V-0014-ME-DW-7106
Pump Data Sheet For Amine Drain Sump Pump P-3120-04	NGL-V-0014-ME-DT-7111
Pump Cross Section Drawing and BOM For Amine Drain Sump Pump P-3120-04	NGL-V-0014-ME-DW-7103
Pump PID Drawing For Amine Drain Sump Pump P-3120-04	NGL-V-0014-ME-PD-7116

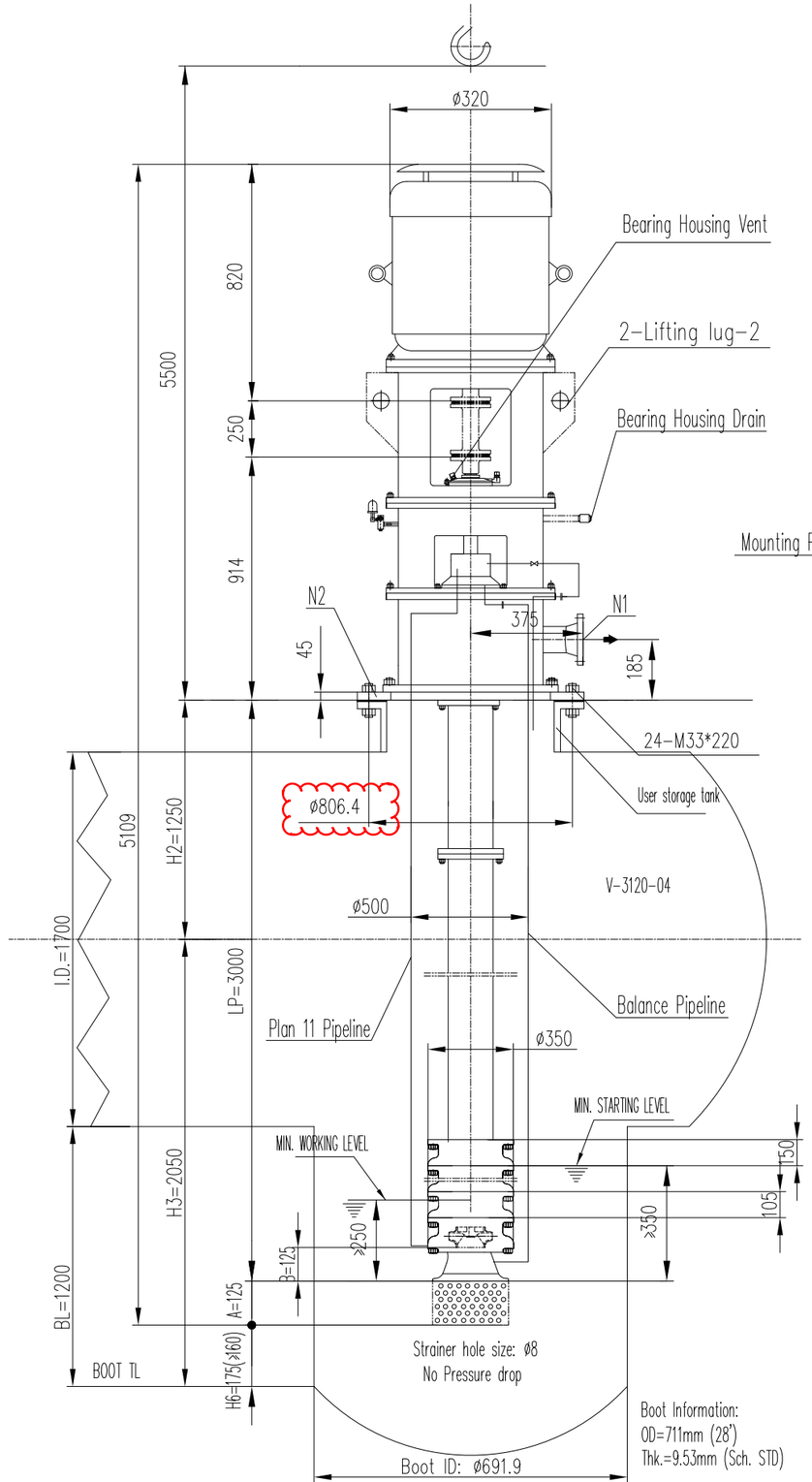

Anchor Bolt will be supplied by DBP.

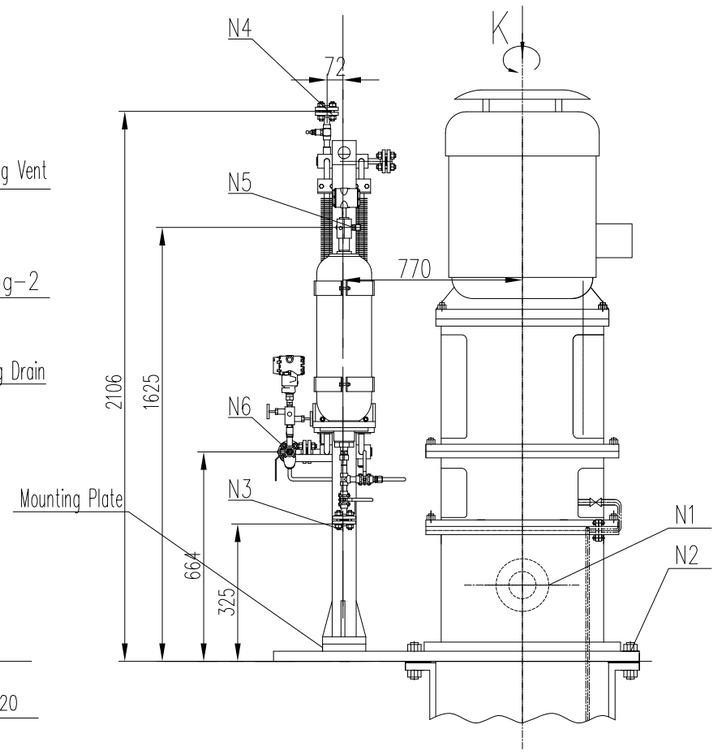

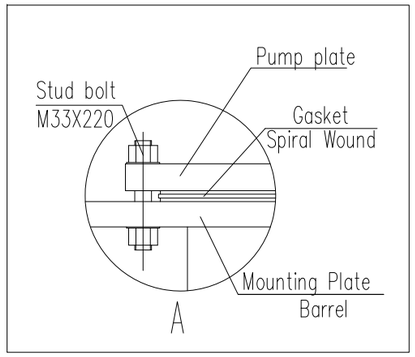

PUMP INFORMATION	
Item No.:	P-3120-04
Service:	AMINE DRAIN SUMP PUMP
Model:	LDB 30-35X11-BV
Seal Plan:	14+53B
Flow/Head	11.4m3/h & (97.5+3.185)m
Motor:	15KW - 4P
Rotation:	Anti-clockwise viewed from the drive-end
No of Stages:	11
Rotor weight:	290kg
Rotor speed:	1460 rpm

Note:
1. The weight of maximum maintenance part is 1650 kg.
2.Required bolts and nuts, gasket and mounting plate for installation of pump on drum nozzle will be supplied DEEP BLUE. Spare bolts and nuts, gasket will also be supplied accordingly.

Code1	☐	(Approved): No comment and release for Manufacturing (Document to be stamped as Final for considering in Vendor Data Book)
Code2	☐	(Approved with Comments): VENDOR/Sub-Contractor shall correct/revise document and issue it as "FOR APPROVAL" (Work May Be Proceeded)
Code3	☐	(Commented): VENDOR/Sub-Contractor shall correct /revise and resubmit it as "FOR APPROVAL" of the date documents specified (Corrected to be resub-mitted before starting to manufacture.
No Code	☐	CONSULTANT and PURCHASER check results on Class 2 documents will be returned without any CODE. VENDOR/Sub-Contractor shall correct/revise document and issue it as "FOR INFORMATION"

The above checking result by OIEC shall in no way relieve Vendor of any liability, obligation and responsibility out of the purchase order and the mutual agreement in writing

OIEC ...building trust شرکت مهندسی و ساختمان صنایع نفت

DATE :
DEPT:
Signature :

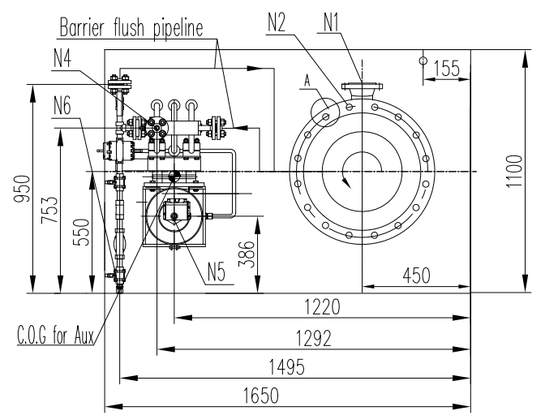

Plan View

Plan North

LIFTING INFORMATION

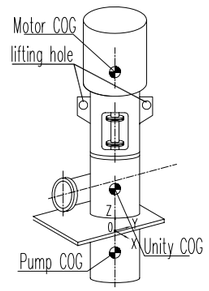

Pump COG	AX	0
	AY	-30
	AZ	60
Motor COG	BX	0
	BY	0
	BZ	195
Unity COG	CX	0
	CY	-30
	CZ	38
COG		

Static loading calculation results		
FXstatic=	1420/-1420	N
FYstatic=	1780/-1780	N
FZstatic=	-20339/-22659	N
MXstatic=	1756/-1756	N*m
MYstatic=	780/-780	N*m
MZstatic=	1233/-1233	N*m

Dynamic loading calculation results		
FXdynamic=	95/-95	N
FYdynamic=	95/-95	N
FZdynamic=	0/0	N
MXdynamic=	95/-95	N*m
MYdynamic=	95/-95	N*m
MZdynamic=	99/99	N*m

Note:
Location of Loads & Moments Calculation is the geometric center of baseplate lower surface.

REV.	DATE	DESCRIPTION	PREP.	CHECK	APPROVAL	OIEC APP.
D4	15.Aug.19	ISSUED FOR APPROVAL	N.Z	T.H	R.C	A. ALIPOUR
D3	31.Jun.19	ISSUED FOR APPROVAL	N.Z	T.H	R.C	A. ALIPOUR
D2	17.Jun.19	ISSUED FOR APPROVAL	N.Z	T.H	R.C	A. ALIPOUR
D1	20.May.19	ISSUED FOR APPROVAL	N.Z	T.H	R.C	A. ALIPOUR
D0	03.Apr.19	ISSUED FOR APPROVAL	N.Z	T.H	R.C	B.KHODADADEH

Contractor

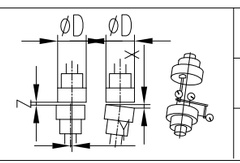

D≤200	X	≤0.05
	Y	≤0.05
	Z	Z±0.1
200<D≤300	X	≤0.08
	Y	≤0.08
	Z	Z±0.15
300<D≤400	X	≤0.10
	Y	≤0.10
	Z	Z±0.2

Nozzle load,Force(N)/Moment(N.m)

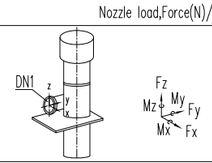

DN1	Fx	Fy	Fz
	1420	1780	1160
	Mx	My	Mz
	920	460	700

NGL-CT-1-0000-ME-PO-0014-D0

Project Title:

NGL 3100 PROJECT

Contractor:

OIEC ...building trust شرکت مهندسی و ساختمان صنایع نفت

STATUS CODE: A=Comment/Review B=Approval C=Final Issue

Pump General Arrangement DrawingFor Amine Drain Sump Pump P-3120-04

OWNER DRAWING NUMBER

Project Name	Originator	PO Serial No.	Disc.	Doc. Type	Seq No.	Rev.	Sheet No.	Status	Class	Size
NGL	V	0014	ME	DW	7101	D4	1 OF 1	B	1	A3

OIEC DRAWING NUMBER

Project Code	Source	Unit & Section	Phase	Disc.	Doc. Type	Serial No.	Rev.

WEIGHT	
Total	2397
Skid weight	535
Aux. weight	200
Motor weight	212
Pump weight	1450

Earthing bolt detail

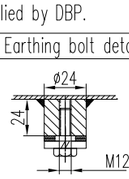

PUMP END

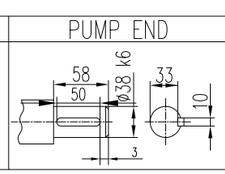

LIFTING LUG

Nozzle information

NO.	Nozzle	Sign	NPS	Standard	Rating	Face
6	Plan 53B Filling	N6	1/2"	NPT Quikly connection		
5	Plan 53B N2 Charging	N5	M14X1.5			
4	Plan 53B Vent	N4	1/2"	ASME B16.5-09	Class600	RF
3	Plan 53B Drain	N3	1/2"	ASME B16.5-09	Class600	RF
2	Baseplate	N2	26"	ASME B16.47 SERIE A	Class150	RF
1	Pump Discharge	N1	1-1/2"	ASME B16.5-09	Class300	RF

This document is the property of OIEC. It is confidential and all rights reserved. Neither the whole nor part of this document may be disclosed to any third party, reproduced, stored in any retrieval system or transmitted in any form or by any means without the prior written consent of OIEC. Contract No.: NGL-CT-1-0000-ME-PO-0014-D0 Date: 10-Apr-2018