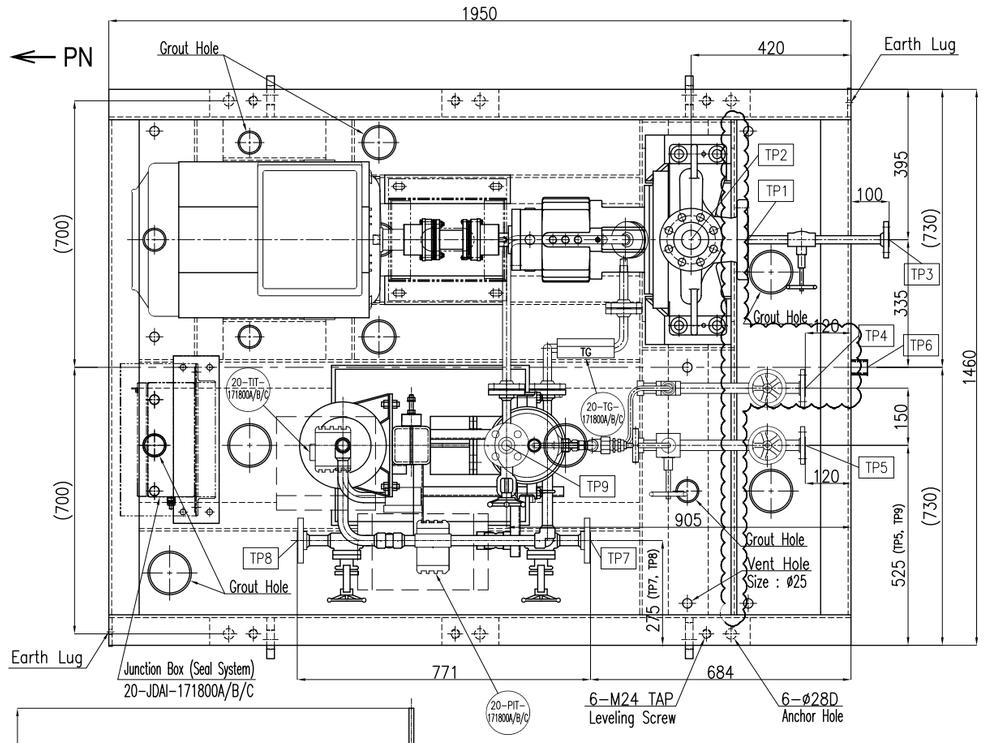

PUMP			
MODEL	CAPACITY (m^3/hr)	HEAD (m)	REVOLUTION (RPM)
HB 80x50-250H	66	74.37	2960

MOTOR			
FRAME	POWER (KW)	VOLT (V)	POLE (P)
200L	30	400	2

UNIT : Kg

WEIGHT	PUMP	MOTOR	BASE PLATE	53B SYSTEM	TOTAL
STATIC	270	300	640	150	1360
DYNAMIC	324	300	640	180	1444

WEIGHT	
PUMP ROTOR	MOTOR ROTOR
35 kg	90 kg

Tie-in Point List		
TP10	N2 Charging	5/8" UNF
TP9	Sealing System Vent	3/4", ANSI CL 600 R.F
TP8	Sealing System Drain	3/4", ANSI CL 600 R.F
TP7	Sealing System Filling	3/4", ANSI CL 600 R.F
TP6	Base Plate Drain	NPT 1"
TP5	Cooling Water Outlet	3/4", ANSI CL 150 R.F
TP4	Cooling Water Inlet	3/4", ANSI CL 150 R.F
TP3	Pump Casing Drain	1/2", ANSI CL 300 R.F
TP2	Pump Discharge	2", ANSI CL 300 R.F
TP1	Pump Suction	3", ANSI CL 300 R.F
No.	Tie-in Point	Specification

Proper Pump Lifting

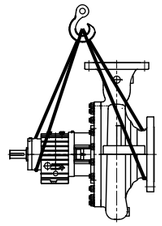

Sling ropes must not be attached to the free shaft. Failure to do so may result in equipment damage.

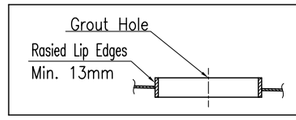

20-FI-171800A/B/C	FLOW INDICATOR [COOLER COOLING WATER OUTLET LINE]
20-PIT-171800A/B/C	PRESURE TRANSMITTER [SEALING SYSTEM (PLAN #53B)]
20-TIT-171800A/B/C	TEMPERATURE TRANSMITTER [SEALING SYSTEM (PLAN #53B)]
20-PG-171800A/B/C	PRESSURE GAUGE [SEALING SYSTEM (PLAN #53B)]
20-TG-171800A/B/C	TEMPERATURE GAUGE [SEALING SYSTEM (PLAN #53B)]

Anchor bolts & nuts
(ASTM F1554 Gr. 36+Hot Dip Galvanize)

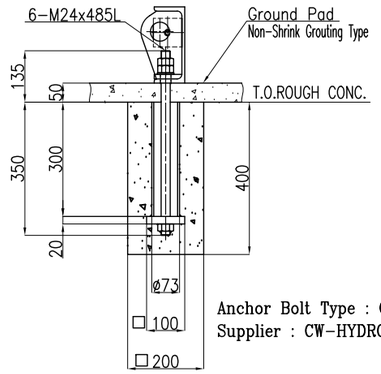

Anchor Bolt Type : CZ
Supplier : CW-HYDRO

Flange Rating ANSI B16.5 300LB (RF)

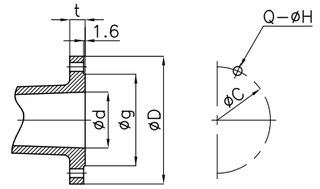

Rating	ød	øg	øD	øC	Q-øH	t
Suction	80	127	210	168.3	8-ø23	29
Discharge	50	91.94	165	127	8-ø20	22.5

End Suction
Top Discharge

Nozzle Loadings Data

Nozzle	Size (ø)	Force(N)			Moment(N-m)		
		Fx	Fy	Fz	Mx	My	Mz
Suction	80	2660	2140	1780	1900	940	1440
Discharge	50	1420	1160	1780	920	460	700

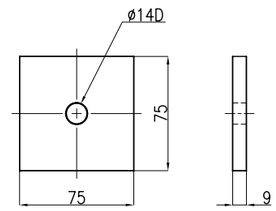

EARTH LUG DETAIL
(MATERIAL : S.S 304)

NOTE

1. Permissible amplitude of vibration : 3.2 mm/s (r.m.s)
2. Mass moment of inertia of machine
1) Pump rotor : 0.524 kg·m
2) Motor rotor : 0.168 kg·m
3. Max. maintenance weight : 300 kg
4. The shape of the aux. piping shown in the GA drawing may be different from that of the aux. piping of the actual product.

REFERENCE DOCUMENTS	DOC. NO.

LEGEND

	DES.
SYMBOL	

EQUIPMENT LIST

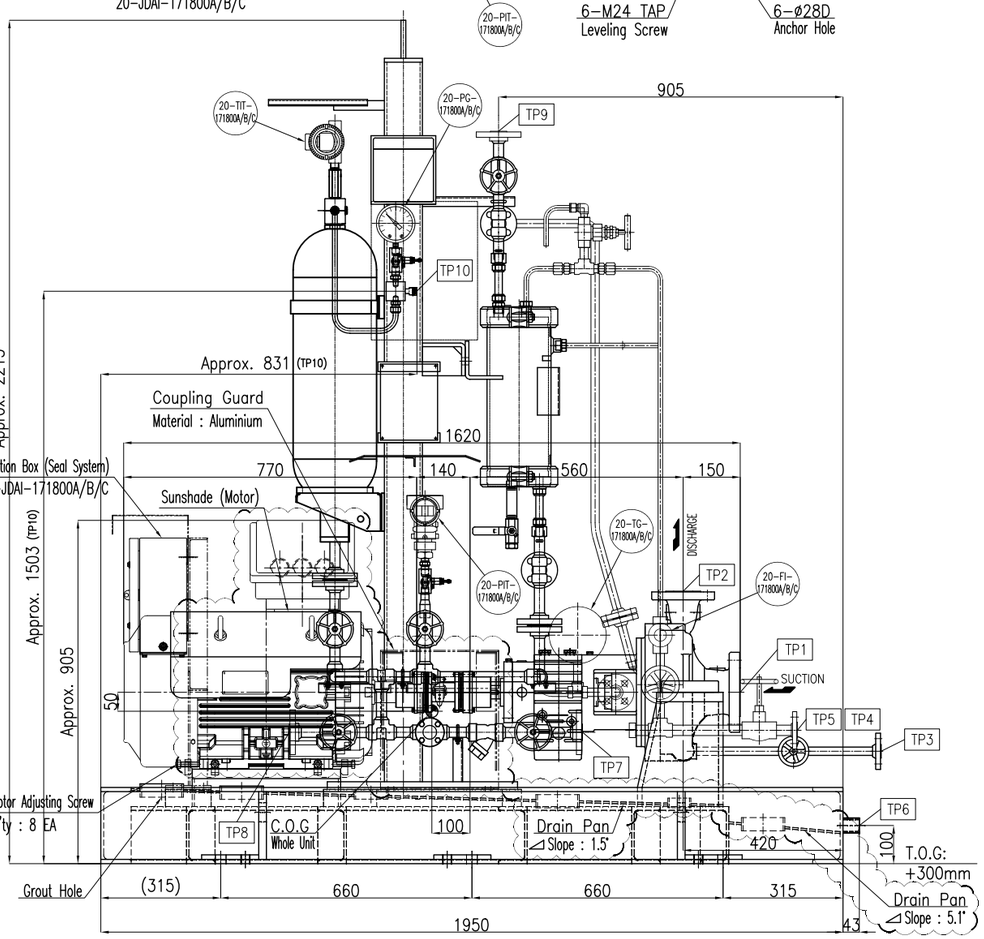

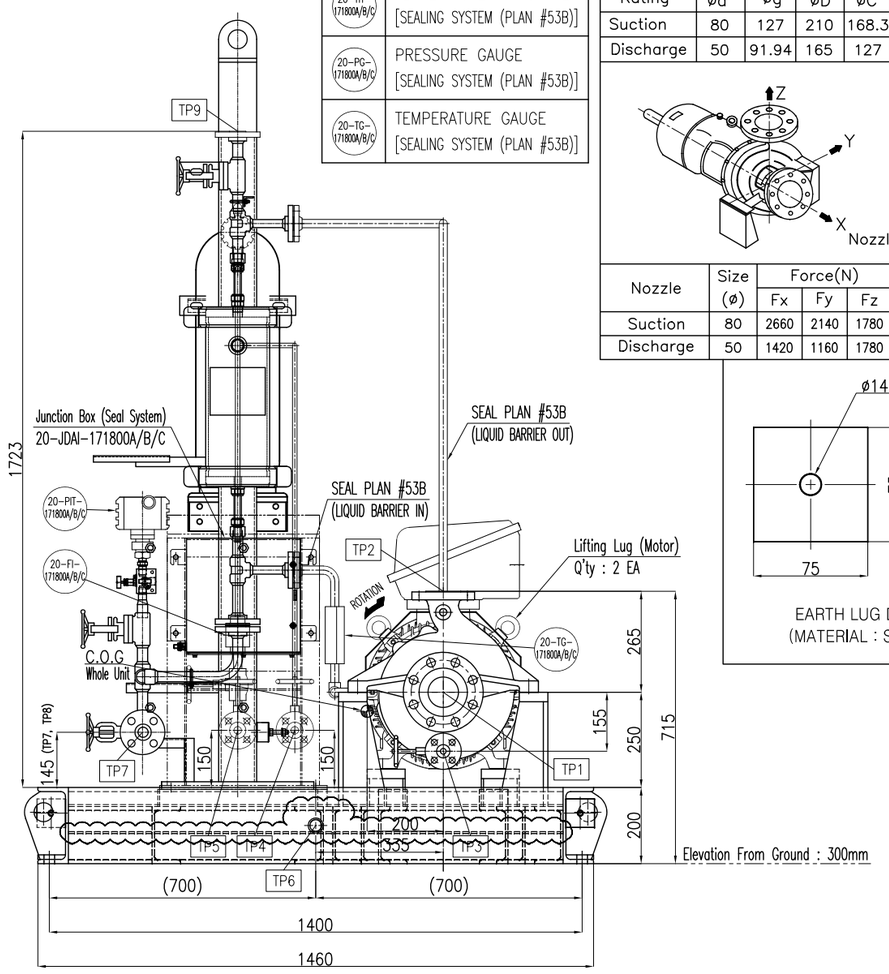

Code1	Approved: No comment and the document is released for Manufacturing.
Code2	☐ Approved with Minor comment: Vendor shall correct, revise and resubmit the document. The document can be released for Manufacturing if changes incorporated.
Code3	☐ Commented: Vendor shall correct, revise and resubmit the document by the date specified. The document shall be revised under the Status of "R: Revised Issue". All corrected documents shall be resubmitted before starting the Manufacturing.
Code4	☐ Not Accepted (Rejected): Vendor shall re-work/re-design/re-specify the contents of the documents according to the comments/ reasons for rejection. All corrected documents shall be resubmitted before starting the Manufacturing process. In this case vendor shall not proceed with subsequent work until receiving code 1 or code 2 or no code from CONSULTANT / OWNER / MC. VENDOR shall resubmit the documents with the same revision within (10) working days(including transmission/mailing time) after receiving the commented documents from CONSULTANT / OWNER / MC.
No Code	☐ No Code(Only for" FOR INFORMATION" documents and "As-Built DWGs" Document has been submitted for CONSULTANT / OWNER / MC's Information(FI) consistency, completeness and correctness of documents content is in VENDOR/EPC contractor responsibility.

Above checking results by EIED shall in no way relieve Vendor of any liability, obligation and responsibility out of the purchase order and the mutual agreement in writing.

EIED
DATE : 18.Apr.2021
DEPT. : MA
Signature : D. M.

Only for internal review

CV	PI	EL	IN	ME	MA
ST	AR	PR	SA	HV	TL

REV.	DATE	STATUS	PURPOSE OF ISSUE	PREP.	CHKD.	APPD.	AUTH.
06	11/03/2021	R	FOR APPROVAL	J.H. KIM	Y.H. OH	Y.H. OH	M.Y. LEE
05	20/11/2020	R	FOR APPROVAL	J.H. KIM	Y.H. OH	Y.H. OH	M.Y. LEE
04	11/09/2020	R	FOR APPROVAL	J.H. KIM	Y.H. OH	Y.H. OH	M.Y. LEE
03	25/08/2020	R	FOR APPROVAL	J.H. KIM	Y.H. OH	Y.H. OH	M.Y. LEE
02	30/07/2020	R	FOR APPROVAL	J.H. KIM	Y.H. OH	Y.H. OH	M.Y. LEE
01	02/07/2020	R	FOR APPROVAL	J.H. KIM	Y.H. OH	Y.H. OH	M.Y. LEE
00	13/03/2020	F	FOR APPROVAL	J.H. KIM	Y.H. OH	Y.H. OH	M.Y. LEE

EIED

Kangan Olefin Project

© CWI-Hydro.Inc.

Centrifugal Pumps & Special Pumps

Contract No. HPDO-H-18-104

P.O No. KP-20-00-PS-MA-PO-0001

SCALE: N/S

DRAWING TITLE:
General arrangement drawing for 20-P-1702 A/B/C

DRAWING NO.	REV.	SHEET No.	SIZE
VP-20-00-MA-0001-1305	06	1 OF 1	A3

This document is the sole of Kangan Petrochemical Development Co. (KPDC)., all information contained herein may neither be reproduced, used, disclosed, transmitted nor in any way made public without permission of the Owner.