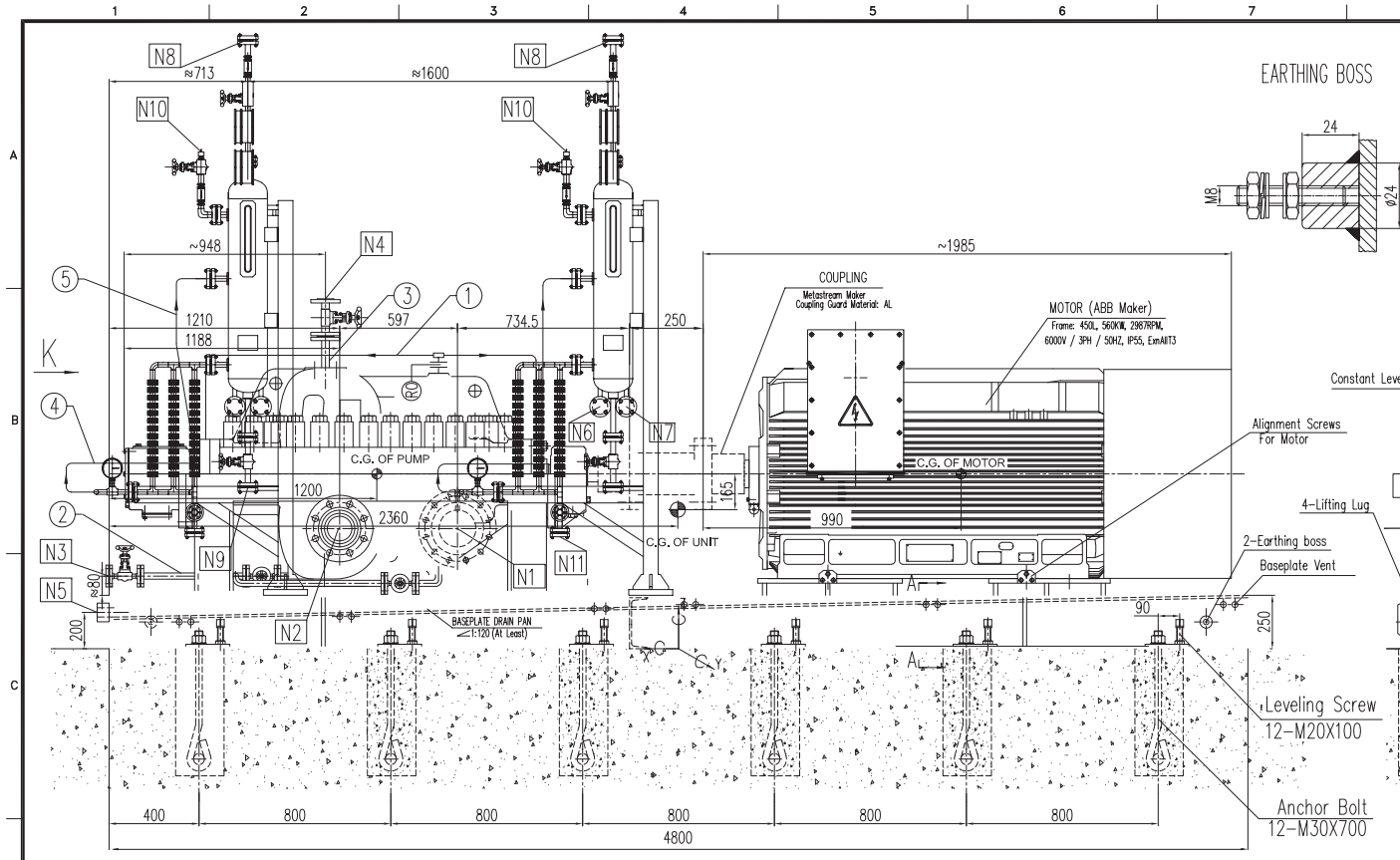

EARTHING BOSS

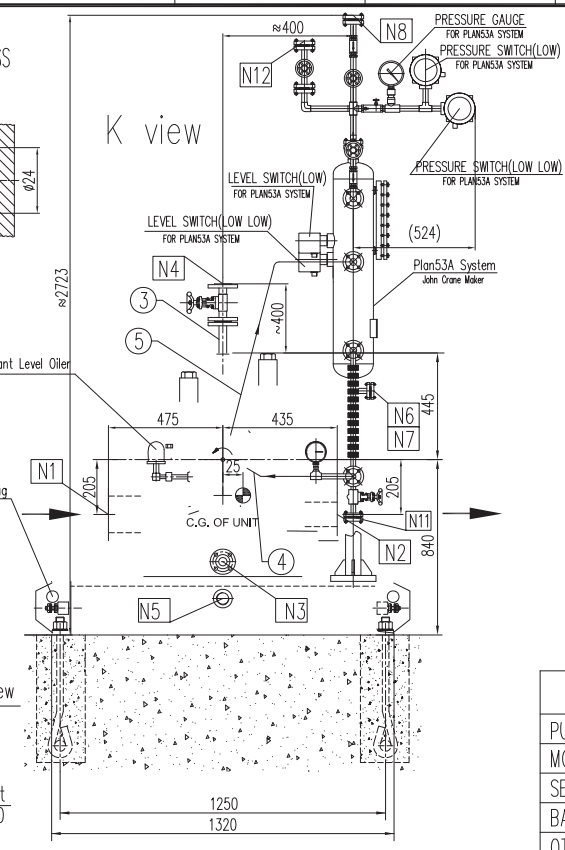

PROCESS CONNECTIONS			
Code	Size & Rating	Description	Remark
N1	8"-ANSI 900Lb-RTJ	Pump Suction	
N2	6"-ANSI 900Lb-RTJ	Pump Discharge	
N3	3/4"-ANSI 900Lb-RTJ	Pump Drain	Flange with valve&blinded
N4	3/4"-ANSI 900Lb-RTJ	Pump Vent	Flange with valve&blinded
N5	G2"	Baseplate Drain	
N6	3/4"-ANSI 150Lb-RF	Cooling Water Inlet of Plan53A	Blind Flange
N7	3/4"-ANSI 150Lb-RF	Cooling Water Outlet of Plan53A	Blind Flange
N8	3/4"-ANSI 900Lb-RF	N_2 Connection	Flange with valve&mating flange
N9	3/4"-ANSI 900Lb-RF	Plan53A Drain	Flange with valve&blinded
N10	1/2" Quick Fittings	Plan53A Filling	Quick connection
N11	3/4"-ANSI 900Lb-RF	Plan53A Cooler Drain	Flange with valve&blinded
N12	3/4"-ANSI 900Lb-RF	Plan53A Vent	Flange with valve&blinded

GENERAL NOTES

PUMP INFORMATION	
Item No.:	101-P-101/201/301/401 A/B/C
Unit:	101
Service:	AMINE H.P PUMPS
Model:	APIFLO-MK 180-100X8-A
Seal Plan:	11+53A+61
Motor:	560KW - 2987RPM

1. Valve type of pump drain and vent is ball valve.

Pipeline Description	
1	Plan11 Flushing Pipeline
2	Pump Drain
3	Pump Vent
4	Plan53A Flushing Pipeline (to seal chamber)
5	Plan53A Flushing Pipeline (from seal chamber)

Maximum Allowable Amplitude for Foundation:			
Velocity (PEAK)	:	4	mm/s
Displacement	:	25.4	μm

WEIGHT TABLE			
PUMP	:	3635	KG
MOTOR	:	3910	KG
SEAL SYSTEM	:	180	KG
BASEPLATE	:	2200	KG
OTHERS	:	100	KG
TOTAL WEIGHT	:	10025	KG
ROTOR WEIGHT	:	180	KG

REFERENCE DRAWINGS	DWG NO.
MECH. SEAL SYSTEM DRAWING	VP-SP2021-ON-MA-101-P101-0013
MOTOR OUTLINE DRAWING	VP-SP2021-ON-MA-101-P101-0016
COUPLING DRAWING	VP-SP2021-ON-MA-101-P101-0008

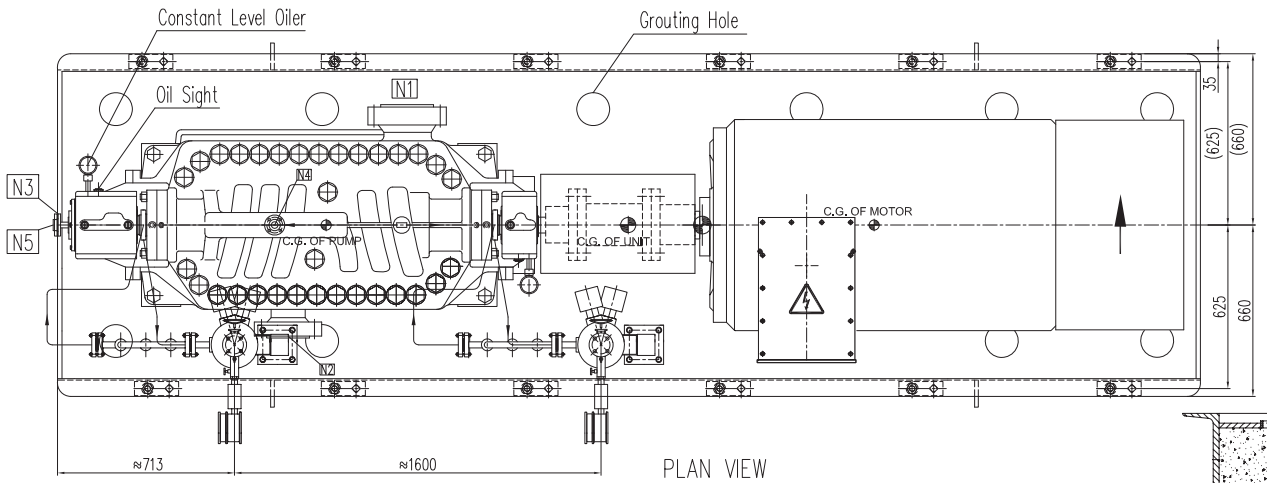

PLAN VIEW

ANCHOR BOLT
M30x700

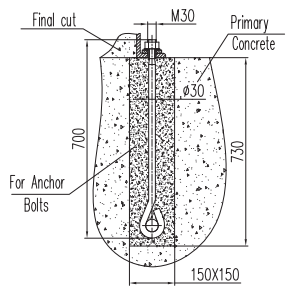

A-A

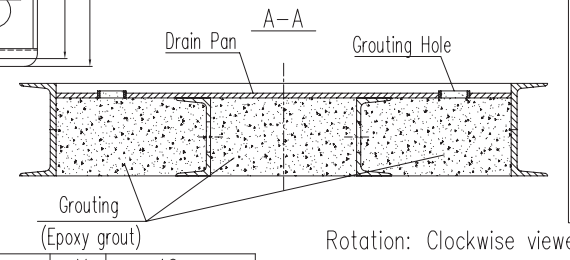

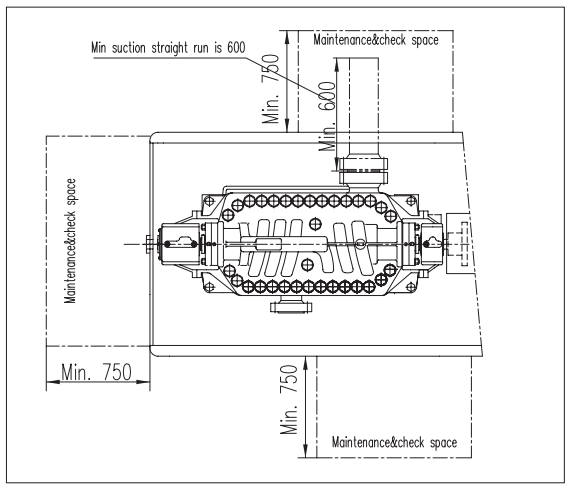

Rotation: Clockwise viewed from the drive-end

Static loading calculation results		
FXStatic=±	12540	N
FYStatic=±	16000	N
FZStatic=±	-88123/108763	N
MXStatic=±	26558	N*m
MYStatic=±	37889/7035	N*m
MZStatic=±	27719	N*m

Dynamic loading calculation results		
FXdynamic=±	0	N
FYdynamic=±	281	N
FZdynamic=±	281	N
MXdynamic=±	2028/-1556	N*m
MYdynamic=±	311	N*m
MZdynamic=±	311	N*m

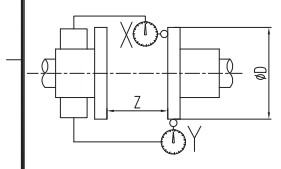

D≤200	X	≤0.05
	Y	≤0.05
	Z	Z±0.1
200<D≤300	X	≤0.08
	Y	≤0.08
	Z	Z±0.15
300<D≤400	X	≤0.10
	Y	≤0.10
	Z	Z±0.2

MAX. ALLOWABLE MISALIGNMENT(mm)

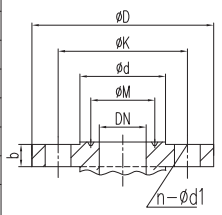

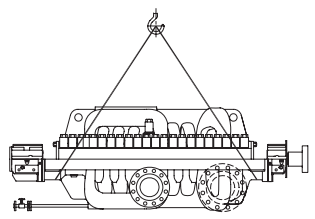

C.G. OF UNIT	X	40
	Y	25
	Z	675
C.G. OF PUMP	X	1200
	Y	0
	Z	840
C.G. OF MOTOR	X	-1405
	Y	0
	Z	840

Centerline of Gravity List(mm)

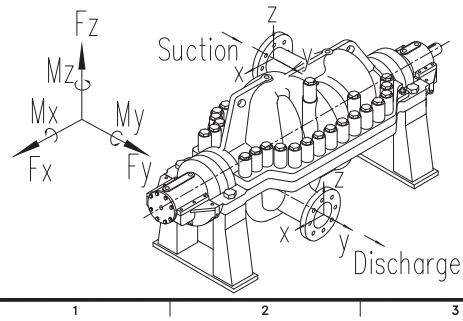

DISCHARGE	6	±4980	±6220	±4100	±4600	±2360	±3520
	inch	Fx	Fy	Fz	Mx	My	
	DN	Force (N)			Moment (Nm)		
SUCTION	8	±7560	±9780	±6220	±7060	±3520	±5160
	inch	Fx	Fy	Fz	Mx	My	
	DN	Force (N)			Moment (Nm)		

Nozzle Allowable Force & Moment

N4	ANSI B16.5 900LB RJ	3/4"	130	25.4	89	66.55	44.5	4-ø22
N3	ANSI B16.5 900LB RJ	3/4"	130	25.4	89	66.55	44.5	4-ø22
N2	ANSI B16.5 900LB RJ	6"	381	55.6	317.5	241.3	211.1	12-ø32.5
N1	ANSI B16.5 900LB RJ	8"	470	63.5	393.7	307.9	270	12-ø39
Name	Standard	DN	ØD	b	ØK	Ød	ØM	n-Ød1

Flange Size

Code1	(Approved) Vendor to submit "For Final (No comment & release for manufacturing)	
Code2	(Approved with comments) Vendor shall correct / revise & submit it as "For Final" (Released for manufacturing if change incorporated as indicated)	
Code3	(Commented) : Vendor shall correct / revise & resubmit . It as " For Approval" of the date specified : (Corrected documents to be	
Code4	Not Acceptable quality (Reject)	

The above checking result by OIEC shall in no way relieve Vendor of any liability, obligation and responsibility out of the purchase order and the mutual agreement in writing

OIEC-SP 20&21

DATE : 09/06/2014
DEPT: Machinery
Signature : Salem

Only for internal review

CV	PI	EL	IN	ME	MA
ST	BU	PR	SA	HV	TL

REV.	DATE	DESCRIPTION	ORIG.	PREP.	CH'D.	APP'D.	Contractor APP'D
5	21.May.2014	FOR APPROVAL	DBP	Apple	Ryan	Tino	
4	25.Apr.2014	FOR APPROVAL	DBP	Apple	Ryan	Tino	
3	25.Mar.2014	FOR APPROVAL	DBP	Apple	Ryan	Tino	
2	28.Oct.2013	FOR APPROVAL	DBP	Apple	Ryan	Tino	
1	14.Aug.2013	FOR APPROVAL	DBP	Apple	Ryan	Tino	
0	23.MAY.2013	FOR APPROVAL	DBP	Apple	Ryan	Tino	

SOUTH PARS GAS FIELD DEVELOPMENT-
PHASES 20 & 21, ASSALUYEH-IRAN
ONSHORE FACILITIES

NIOC
PARS OIL AND GAS COMPANY

PROJECT No.: POGC-572-88-35 | DOC.CLASS: | SCALE :

DEEP BLUE PUMP CO.

OIEC

101-P-101A/B/C 101-P-201A/B/C 101-P-301A/B/C 101-P-401A/B/C
AMINE H.P PUMPS
GENERAL ARRANGEMENT DRAWING

DRAWING No. VP-SP2021-ON-MA-101-P101-0001 | SHEET No. 1 OF 1 | REV. 5