NO	NOTES
1	CASE DRAIN KIT : -CONNECTIONS ARE BUTT WELDED, SCHEDULE 160 -FLANGES & PIPE MATERIAL : STAINLESS STEEL •WELDING PROCEDURES : PN.05.29-06/E, SDJ-02-02 (ST.STL. TO ST.STL.)
2	API PLAN 11 & VENT KITS (PORT 6): -CONNECTIONS ARE BUTT WELDED, SCHEDULE 160 -FLANGES & PIPE MATERIAL : STAINLESS STEEL •WELDING PROCEDURES : PN.05.29-06/E, SDJ-02-02 (ST.STL. TO ST.STL.)
3	LIQUID BUFFER INLET & OUTLET KIT (PORTS 2 & 7): -CONNECTIONS ARE BUTT WELDED, SCHEDULE 80 -FLANGES & PIPING MATERIAL: STAINLESS STEEL -WELDING PROCEDURE: PN.05.29-06/E, SDJ-02-02 (ST.STL. TO ST.STL.)
4	COOLING WATER KIT: -CONNECTIONS ARE SCREWED, SCHEDULE 80 -FLANGES ARE SOCKET WELDED TYPE -FLANGES & PIPING MATERIAL: CARBON STEEL -WELDING PROCEDURE: PN.05.29-02/E, SDJ-02-01 (CARB.STL. TO CARB.STL.)
5	FLANGES FACING FINISH : Ra 3.2-6.3um
6	MAIN MOTOR "ABB" FRAME 280 , TYPE : M3GP 280 SMB 2 ExnAIIT3 80 KW , 2979 RPM , 400V/3PH/50HZ MOUNTING : IM3011 , V1 (FLANGE) IP55 , ExnAIIT3 (SUPPLIED BY SUNDYNE)
7	MECHANICAL SEAL CODE API FLUSH PLANS : 11 & 53
8	N2 AMPLIFYING UNIT SUPPLIED FOR API-53A

LTR	DEC	REVISIONS	DATE/NAME
1	11059	-MODIFIED ACCORDING TO CUSTOMER COMMENTS	13/10/05 L.G.
2	11188	-MODIFIED ACCORDING TO CUSTOMER COMMENTS	07/12/05 L.G.

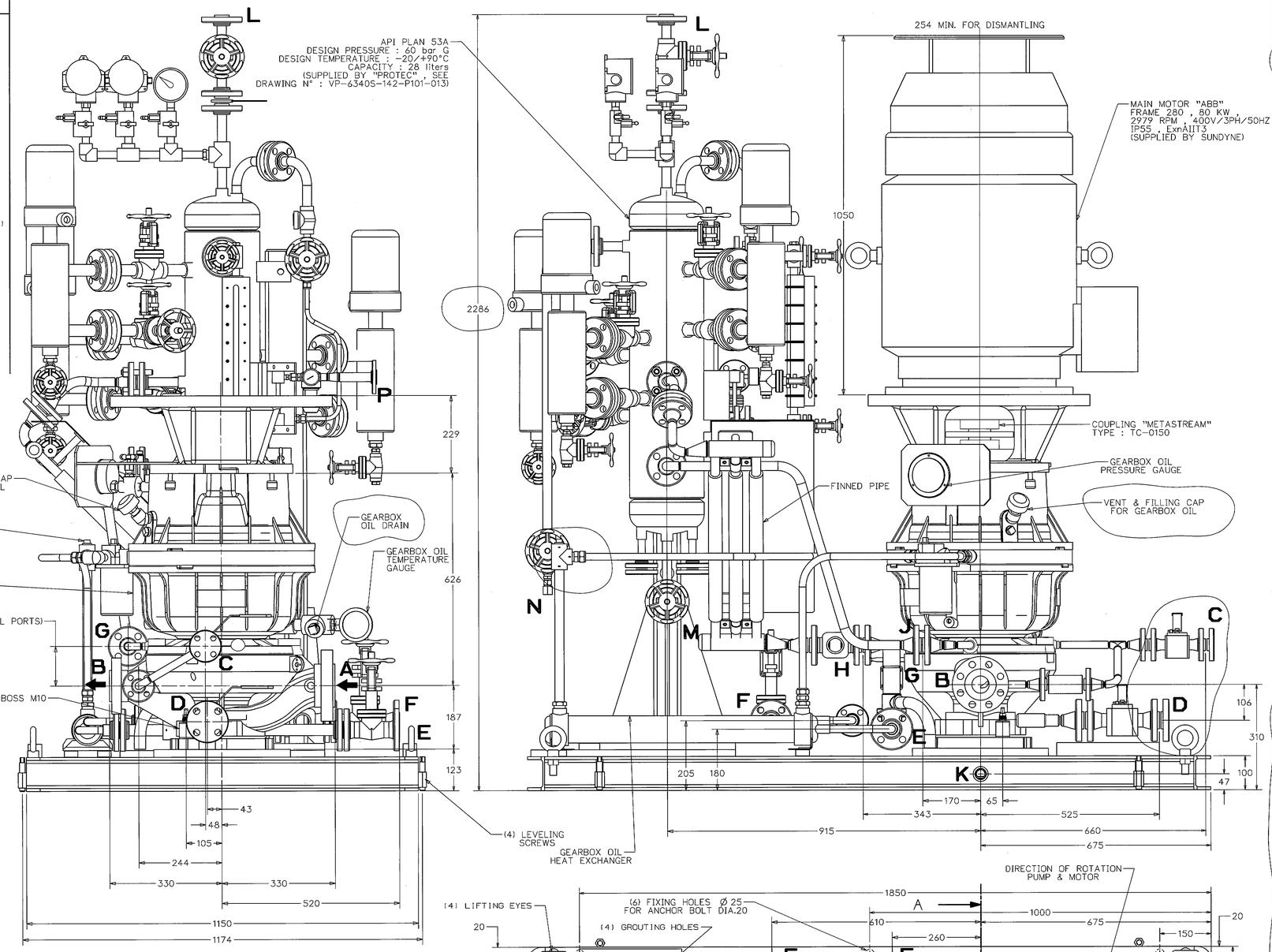

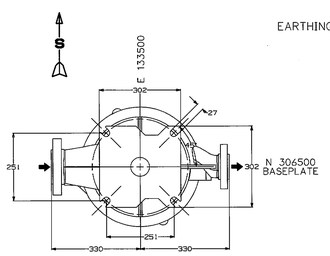

BASEPLATE DETAIL

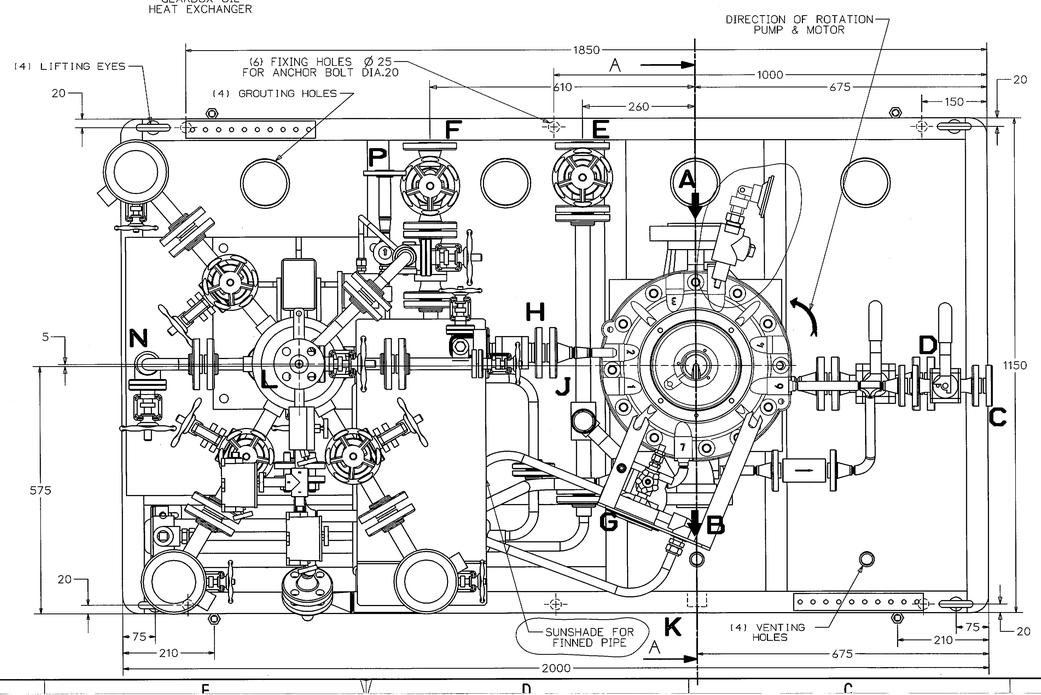

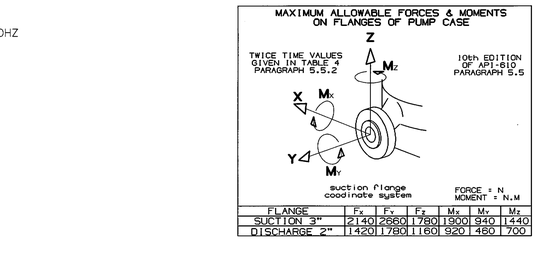

FLANGE	F_x	F_y	F_z	M_x	M_y	M_z
SUCTION 3"	2140	2660	1780	1900	940	1440
DISCHARGE 2"	1420	1780	1160	920	460	700

WEIGHT TABLE

FLUID END	:	222 KG
GEARBOX	:	122 KG
ADAPTOR	:	35 KG
COUPLING	:	21 KG
EQUIPMENT	:	45 KG
BEDPLATE	:	265 KG
API-53	:	170 KG
MOTOR	:	665 KG
TOTAL WEIGHT	:	1545 KG

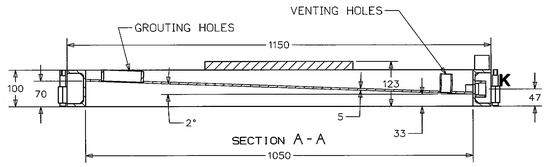

CONNECTIONS TABLE

LTR	DESCRIPTION	TYPE/SIZE
A	PUMP SUCTION	FLANGE 3"-600#RF
B	PUMP DISCHARGE	FLANGE 2"-600#RF
C	SEAL VENT & API-11 , PORT 6	BLIND FLANGE 1/2"-600#RF
D	PUMP CASE DRAIN	BLIND FLANGE 1"-600#RF
E	GEARBOX OIL COOLER INLET	GATE VALVE FLANGED 1"-300#RF
F	GEARBOX OIL COOLER OUTLET	GLOBE VALVE FLANGED 1"-300#RF
G	BUFFER FLUID INLET (PORT 7)	FLANGE 3/4"-600#RF
H	BUFFER FLUID OUTLET (PORT 2)	FLANGE 3/4"-600#RF
J	SEAL DRAIN (PORT 1)	1/2"NPT Female (OPEN)
K	BEDPLATE DRAIN	1"NPT Female
L	VENT (API-53A)	FLANGE 3/4"-600#RF
M	DRAIN (API-53A)	GATE VALVE 3/4" NPT Female with PLUG
N	FILLING (API-53A)	QUICK CONNECTION 1/2" NPT Male
P	NITROGEN INLET (API-53A)	FLANGE 3/4"-150#RF

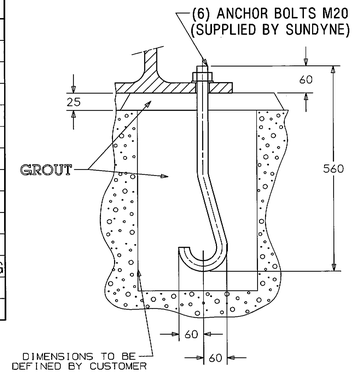

FOUNDATION DETAIL

SEAL PORTS DATA

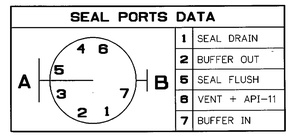

1	SEAL DRAIN
2	BUFFER OUT
5	SEAL FLUSH
6	VENT + API-11
7	BUFFER IN

DRAWN.: L.GRILLOT	08-JUN-05	SUNDSTRAND INTERNATIONAL S.A. B.P.30-21604, LONGVIC Cedex FRANCE TEL: 03.80.38.33.00 FAX: 03.80.38.33.69	Sundyne
ENG.: B.BENUCCI	09-DEC.2005		
CHKR.: P.SOUDANT			
MFR.: N/A			
SCALE: 1/4		TITLE: OUTLINE DRAWING FOR LMV-311, S/N. D-870482-4-A	
TYPE OF PROJECTION			
DIMENSIONS: MILLIMETERS	SIZE A0	DWG NO. KT75DF99_OUT	SH. 1 OF 1 REV. 2
GENERAL TOLERANCES +/- 5 mm		ORIGINE DWG.NO : mm_kt75df99_as	
		REF.DWG.NO.: /	S/N. D-870482-4-A
UNIGRAPHICS V18	CAD FILE NO.: pmp\lmv-311\d-d870482-4-a\kt75df99_out_revb.prt		

AS BUILT
09 DEC. 2005

OUTLINE DRAWING INFORMATION

DRAWING NO. KT75DF99_OUT SHEET 1 OF 1
REVISION 2 DATE 07-DEC-05
CERTIFIED CORRECT BY DATE 09 DEC. 2005

CUSTOMER APPLICATION DATA

SERIAL NO. D-870482-4-A
CUSTOMER ITEM NO. 142-P-101
CUSTOMER MAN FERROSTAAL
P.O.NO. PO-6340S-0910-01-0017/1
FINAL USER OIEC - GS / NIOC
LOCATION IRAN-SOUTH PARS GAS FIELD 9 & 10
PROJECT HC LIQUID BURNER FEED PUMP

REV.	DATE	DESCRIPTION	ORIG.	PREP.	CHKD.	APPD.	CONT. APPD.
2	07/12/05	MODIFIED ACCORDING TO CUSTOMER COMMENTS	L.G.	L.G.	P.S.	P.S.	
1	13/10/05	MODIFIED ACCORDING TO CUSTOMER COMMENTS	L.G.	L.G.	P.S.	P.S.	

SOUTH PARS GAS FIELD DEVELOPMENT
PHASES 9 & 10, ASSALUYEH-IRAN
ONSHORE FACILITIES

N.I.O.C
PARS OIL AND GAS COMPANY

PROJECT No.: POGC-760-B1-156	DOC. CLASS.	SCALE:

Sundyne | GS E&C | OIEC | IOEC

TITLE:
OUTLINE DRAWING
(142-P-101)

DRAWING No.	SHEET No.	REV.
VP-6340S-142-P101-001	1 OF 1	2