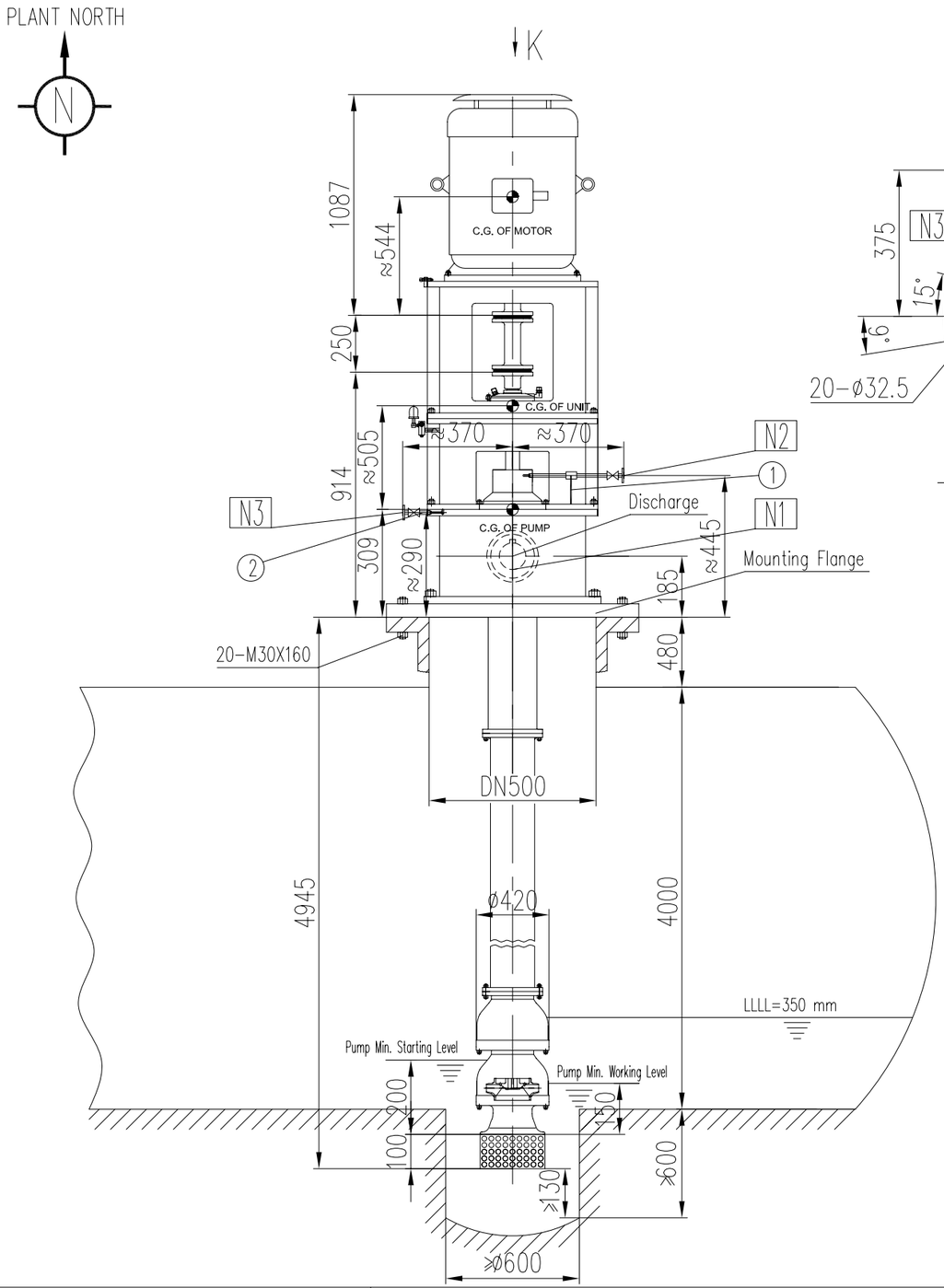

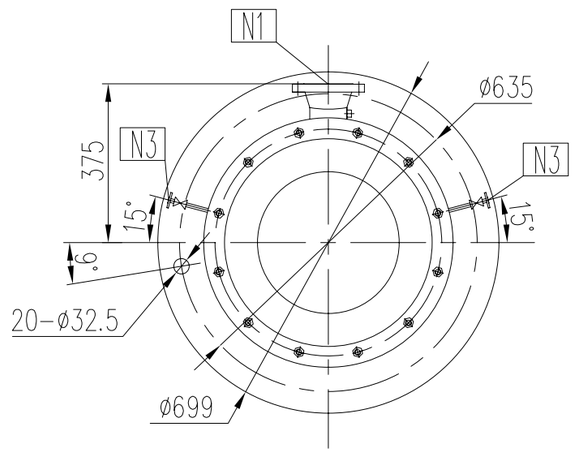

PROCESS CONNECTIONS			
Code	Size & Rating	Description	Remark
N1	1 1/2"-ANSI 300Lb-RF	Pump Discharge	
N2	3/4"-ANSI 300Lb-RF	Mechanical Seal Vent	Flange With valve
N3	3/4"-ANSI 300Lb-RF	External casing drain	Flange With valve

Pipeline Instruction	
1	Plan14 Flushing Pipeline
2	External casing drain

Note:
1. For suction strainer:
-suction strainer pressure drop is 0.0032m.
-mesh size is 8mm.
-open area ratio of strainer is at least 200%
2. Mechanical seal is designed to bear short time dry running condition at start-up .

3. Maximum Allowable AmplitudeFor Foundation:
Velocity Peak-Peak: 4 mm/s
Displacement Peak-Peak: 25.4 μm

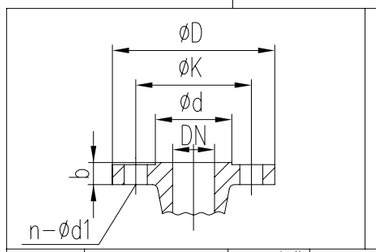

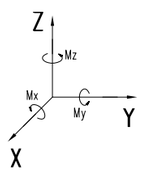

Discharge	ANSI B16.5 300lb RF	1 1/2"	155.4	20.5	114.3	73	4-ø22
Name	Standard	DN	øD	b	øK	ød	n-ød1

Flange Size(mm)

Discharge	1 1/2"	±1420	±1780	±1160	±920	±460	±700
		Fx	Fy	Fz	Mx	My	Mz
	DN	Force (N)			Moment (Nm)		

Nozzle Allowable Force & Moment

Pump: 950	Baseplate: 70	Motor: 718	Total: 1738	Max. maintenance: 950

Weight(kg)

Consumer: NIOC	Capa.: 25	m³/h	DRIVER
Designer:	Head: 325+5.13	m	Motor Type: EXD IIB T4
Project: WEST KAROON OIL FIELDS EARLY PRODUCTION UNIT	Temp.: 45/65	℃	VOLTS/PHASE/HERTZ: 400V/3PH/50HZ
Plant:	Speed: 2970	r/min	
Item No.: 0550-PH-001 A/B	Power: 75	kW	MECH.SEAL
Service: CLOSED DRAIN DRUM PUMPS	Motor Type: YB3 280S		API flushing plan: 14+61
Project Information	Base Information		

DEEP BLUE PUMP CO. | APIFLO-V 30-35X9-V | General Arrangement

1. Rotary Parts:

Pump rotary parts:
Mass: 160 kg, Speed: 2950 rpm

Motor rotary parts:
Mass: 170 kg, Speed: 2950 rpm

2. Double End Stud

Size: M30 X 160
Manufacture: Deep Blue Pump Co.
Material: ASTM A193 B7

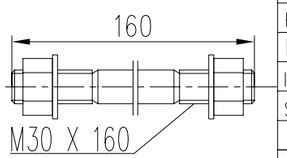

Code1	☐	(Approved) Vendor to submit "For Final (No comment & release for manufacturing)
Code2	☐	(Approved with comments) Vendor shall correct / revise & submit it as "For Final" (Released for manufacturing if change incorporated as indicated)
Code3	☐	(Commented) : Vendor shall correct / revise & resubmit . It as " For Approval" of the date specified : (Corrected documents to be
Code4	☐	Not Acceptable quality (Reject)

The above checking result by EIED shall in no way relieve Vendor of any liability, obligation and responsibility out of the purchase order and the mutual agreement in writing

EIED
WEST KAROON PROJECT

DATE :
DEPT:
Signature :

Only for internal review

CV	PI	EL	IN	ME	MA
CS	CA	PR	SA	HV	TL

REV.	DATE	DESCRIPTION	ORIG. BY	PREP. BY	CHKD. BY	APPD. BY	AUTH. BY
03	29-Dec-2012	FOR APPROVAL		Will	Andy	Ryan	
02	06-Nov-2012	FOR APPROVAL		Will	Andy	Ryan	
01	11-Oct-2012	FOR APPROVAL		Will	Andy	Ryan	

West Karoon Oil Fields
Early Production Units
(Arvandan)

AOGC
ARVANDAN OIL AND GAS COMPANY

P.O. No.: | STAGE: | SCALE:

DEEP BLUE PUMP CO. | MAYSUN Engineering & Construction Company | EIED | Energy Developement Pioneer Co.

DRAWING TITLE:
General drawing for CLOSED DRAIN DRUM PUMPS (0550-PH-001 A/B)

DRAWING No.: VD-AOGC-GA-GEN-5001-0012 | SHEET No. 1 OF 1 | REV. 03