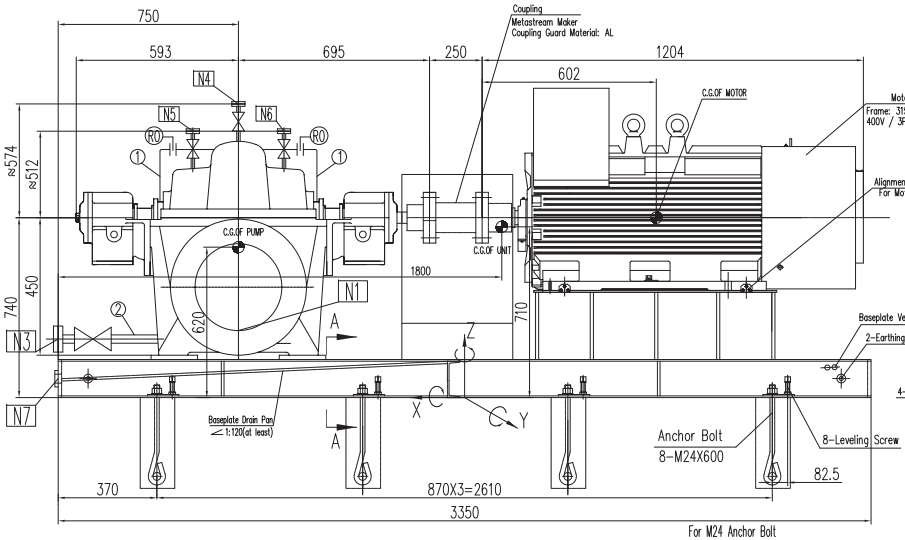

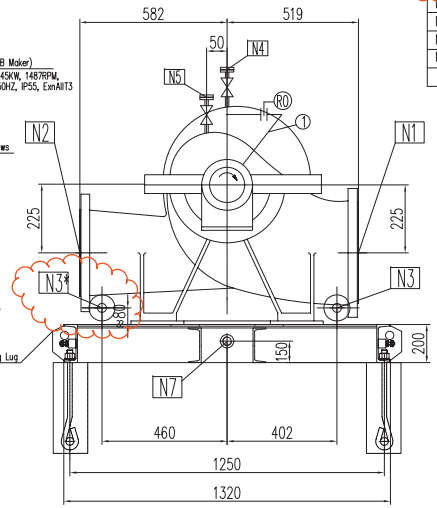

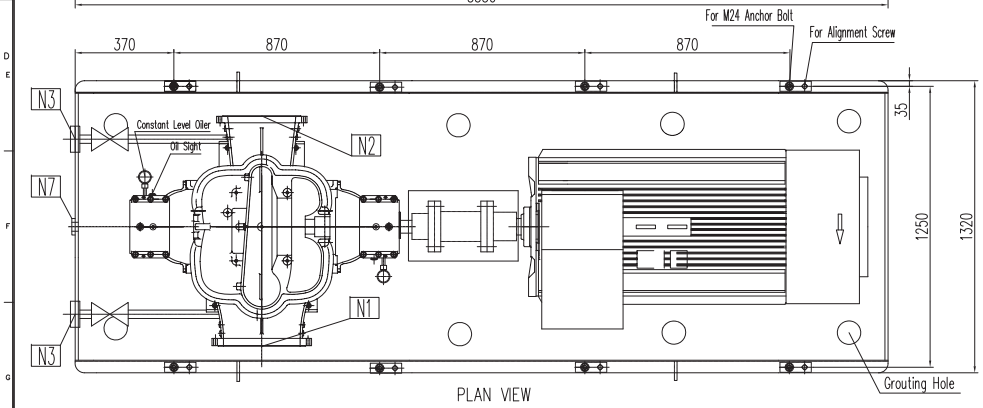

PLAN VIEW

ANCHOR BOLT

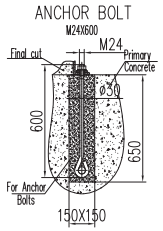

A-A

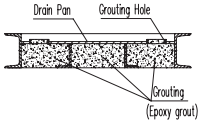

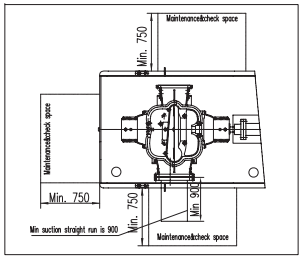

EARTHING BOSS

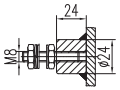

Rotation: Anti-Clockwise viewed from the drive-end

PROCESS CONNECTIONS			
Code	Size & Rating	Description	Remark
N1	12"-ANSI 300lb-RF	Pump Suction	
N2	8"-ANSI 300lb-RF	Pump Discharge	
N3	3/4"-ANSI 300lb-RF	Pump Drain(Suction)	Flange With valve & blind flange
N3*	3/4"-ANSI 300lb-RF	Pump Drain(Discharge)	Flange With valve & blind flange
N4	3/4"-ANSI 300lb-RF	Pump Vent	Flange With valve & blind flange
N5	3/4"-ANSI 300lb-RF	Pump Vent	Flange With valve & blind flange
N6	3/4"-ANSI 300lb-RF	Pump Vent	Flange With valve & blind flange
N7	G2"	Baseplate Drain	

Pipeline Description	
①	Plan11 Flushing Pipeline
②	Pump Drain

WEIGHT TABLE			
PUMP	:	1065	KG
MOTOR	:	1770	KG
SEAL SYSTEM	:	–	KG
BASE PLATE	:	1288	KG
OTHERS	:	30	KG
TOTAL WEIGHT	:	4153	KG
ROTOR WEIGHT	:	85	KG

Maximum Allowable Amplitude For Foundation			
Velocity(PEAK)	:	4	mm/s
Displacement	:	50.8	μm

GENERAL NOTES

PUMP INFORMATION	
Item No.:	132-P-101 A/B
Unit:	132
Service:	COOLING WATER CIRCULATING PUMPS
Model:	SPLITFLO-EDS 200-440G-A
Seal Plan:	11+61
Motor:	145KW - 1487RPM

NOTE: 1. Valve for pump drain and vent are ball valve.

REFERENCE DRAWINGS	DWG NO.
MOTOR OUTLINE DRAWING	VP-SP2021-ON-MA-132-P101-0014
COUPLING DRAWING	VP-SP2021-ON-MA-132-P101-0008

Code1	■	(Approved) Vendor to submit "For Final (No comment & release for manufacturing)
Code2	□	(Approved with comments) Vendor shall correct / revise & submit it as "For Final" (Released for manufacturing if change incorporated as indicated)
Code3	□	(Commented) : Vendor shall correct / revise & resubmit . It as " For Approval" of the date specified : (Corrected documents to be
Code4	□	Not Acceptable quality (Reject)

The above checking result by OIEC shall in no way relieve Vendor of any liability, obligation and responsibility out of the purchase order and the mutual agreement in writing

OIEC-SP 20&21

DATE : 01/01/2014
DEPT: Machinery
Signature : Salem

Only for internal review

CV	PI	EL	IN	ME	MA
ST	BU	PR	SA	HV	TL

REV.	DATE	DESCRIPTION	ORIG.	PREP.	CH'D.	APP'D.	Contractor APP'D
3	03.Dec.2013	FOR APPROVAL	DBP	Apple	Ryan	Tino	
2	28.Oct.2013	FOR APPROVAL	DBP	Apple	Ryan	Tino	
1	17.Aug.2013	FOR APPROVAL	DBP	Apple	Ryan	Tino	
0	23.MAY.2013	FOR APPROVAL	DBP	Apple	Ryan	Tino	

SOUTH PARS GAS FIELD DEVELOPMENT-
PHASES 20 & 21, ASSALUYEH-IRAN
ONSHORE FACILITIES

NIOC
PARS OIL AND GAS COMPANY

PROJECT No.: POGC-572-88-35 | DOC.CLASS: | SCALE :

DEEP BLUE PUMP CO.

OIEC

132-P-101 A/B
COOLING WATER CIRCULATING PUMPS
GENERAL ARRANGEMENT DRAWING

DRAWING No. VP-SP2021-ON-MA-132-P101-0001 | SHEET No. 1 OF 1 | REV. 3

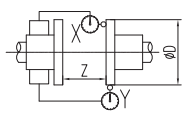

D≤200	X	≤0.05
	Y	≤0.05
	Z	Z±0.1
200<D≤300	X	≤0.08
	Y	≤0.08
	Z	Z±0.15
300<D≤400	X	≤0.10
	Y	≤0.10
	Z	Z±0.2

MAX. ALLOWABLE MISALIGNMENT(mm)

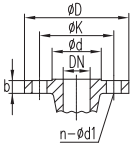

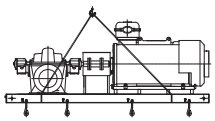

Center of Gravity List		
PUMP	X	825
	Y	0
	Z	620
MOTOR	X	-722
	Y	0
	Z	425
UNIT	X	-225
	Y	0
	Z	710

Rotation: Anti-Clockwise viewed from the drive-end

Static loading calculation results		
FXStatic=±	20900	N
FYStatic=±	25780	N
FZStatic=±	-28186/61986	N
MXStatic=±	40907	N*m
MYStatic=±	51204/23092	N*m
MZStatic=±	51784	N*m

Dynamic loading calculation results		
FXdynamic=±	0	N
FYdynamic=±	125	N
FZdynamic=±	125	N
MXdynamic=±	1116/-936	N*m
MYdynamic=±	128	N*m
MZdynamic=±	128	N*m

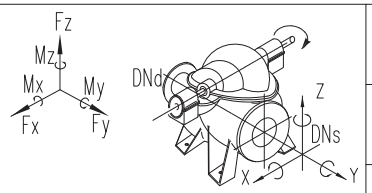

DISCHARGE	8"	±7560	±9780	±6220	±7060	±3520	±5160
	inch	Fx	Fy	Fz	Mx	My	
	DN	Force (N)			Moment (Nm)		
SUCTION	12"	±13340	±16000	±10680	±12200	±5960	±9220
	inch	Fx	Fy	Fz	Mx	My	
	DN	Force (N)			Moment (Nm)		

Nozzle Allowable Force & Moment

Drain	ANSI B16.5 300lb RF	3/4"	117.3	15.7	82.5	42.9	4-Ø18
Discharge	ANSI B16.5 300lb RF	8"	381	41.1	330.2	270	12-Ø26
Suction	ANSI B16.5 300lb RF	12"	520.7	50.8	450.8	381	16-Ø32.5
Name	Standard	DN	ØD	b	ØK	Ød	n-Ød1

Flange Size