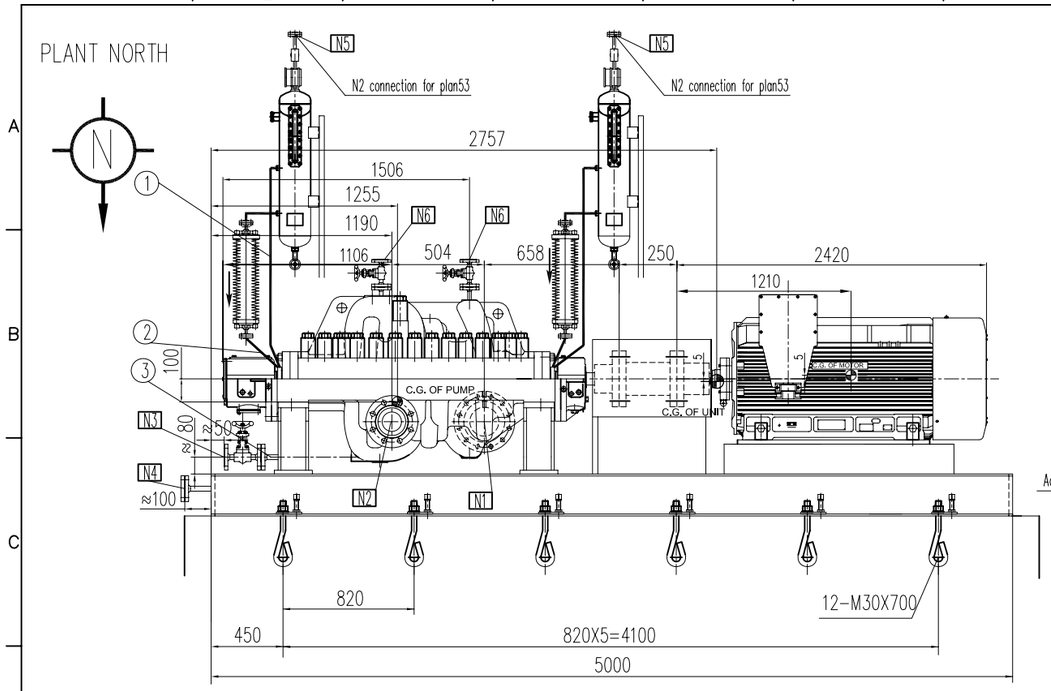

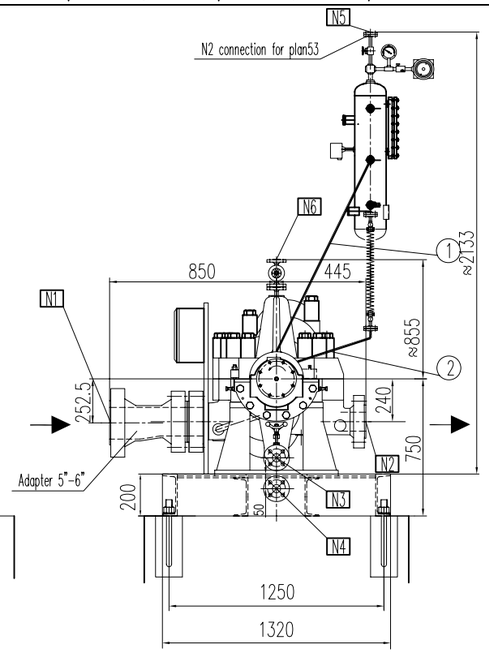

PROCESS CONNECTIONS			
Code	Size & Rating	Description	Remark
N1	6"-ANSI 900Lb-RF	Pump Suction(adapter)	
N2	4"-ANSI 900Lb-RF	Pump Discharge	
N3	3/4"-ANSI 900Lb-RF	Pump Drain	Flange With valve
N4	1"-ANSI 150lb-RF	Baseplate Drain	With blind flange
N5	3/4"-ANSI 300Lb-RF	N2 connection	Flange With valve
N6	3/4"-ANSI 900Lb-RF	Pump Vent	Flange With valve

Pipeline Instruction	
1	Pipe for barrier fluid from seal
2	Pipe for barrier fluid to seal
3	Pump Drain

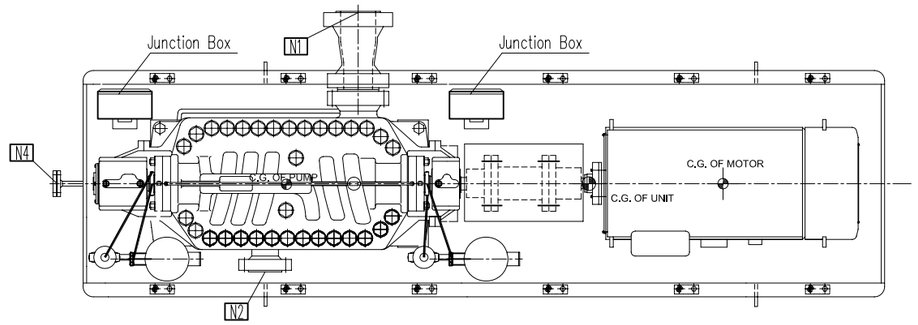

REFERENCE DOCUMENTS	
DOCUMENT NO.	TITLE
VD-AOGC-DR-GEN-5001-0047	Mechanical seal system drawing for WATER INJECTION PUMPS(POINTS 1 & 2)

Code1	☐	(Approved) Vendor to submit "For Final (No comment & release for manufacturing)
Code2	☐	(Approved with comments) Vendor shall correct / revise & submit it as "For Final" (Released for manufacturing if change incorporated as indicated)
Code3	☐	(Commented) : Vendor shall correct / revise & resubmit . It as " For Approval" of the date specified : (Corrected documents to be
Code4	☐	Not Acceptable quality (Reject)

The above checking result by EIED shall in no way relieve Vendor of any liability, obligation and responsibility out of the purchase order and the mutual agreement in writing

EIED
WEST KAROON PROJECT

DATE :
DEPT:
Signature :

Only for internal review

CV	PI	EL	IN	ME	MA
CS	CA	PR	SA	HV	TL

Anchor Bolt
Manufacture: Deep Blue Pump Co.
Size: M30X700
Material: A193 B7

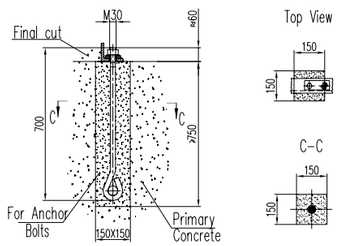

Rotary Parts:

Pump rotary parts:
Mass: 535 kg, Speed: 2950 rpm

Motor rotary parts:
Mass: 652 kg, Speed: 2950 rpm

Maximum Allowable Amplitude For Foundation:
Velocity Peak-Peak: 4 mm/s
Displacement Peak-Peak: 25.4 μm

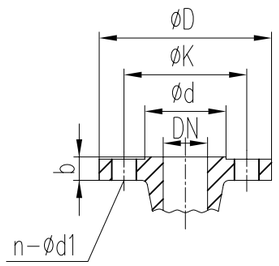

3000	2300	3600	180	9080	1000
Pump	Baseplate	Motor	Seal System	All	Maintenance weight

Weight(kg)

Drain	ANSI B16.5 900lb RF	3/4"	130	26.4	88.9	42.9	4-Ø22
Discharge	ANSI B16.5 900lb RF	4"	292.1	44.4	235	157.2	8-Ø32.5
Suction(adapter)	ANSI B16.5 900lb RF	6"	381	55.6	317.5	216	12-Ø32.5
Name	Standard	DN	ØD	c	ØK	Ød	n-Ød1

Flange Size

Consumer:	NIOC	Capa.:	62	m³/h	DRIVER
Designer:		Head:	996.5	m	Motor Type: EXD IIB T4
Project:	WEST KAROON OIL FIELDS EARLY PRODUCTION UNIT Arvandan Refinery Plant	Temp.:	15/AMB/58	℃	VOLTS/PHASE/HERTZ: 6000V/3PH/50HZ
Plant:		Speed:	2980	r/min	
Item No.:	0510-PA-001 A/B/C/D	Power:	450	kW	MECH.SEAL
Service:	WATER INJECTION PUMPS	Motor Type:	YB2 500		API Flushing plan: 53A(Air fin cooler)
	Project Information		Base Information		

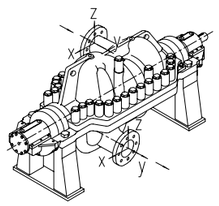

DISCHARGE	4"	±2840	3560	±2320	±2660	±1360	±2000
		Fx	Fy	Fz	Mx	My	Mz
	DN	Force (N)			Moment (Nm)		
SUCTION(adapter)	6"	±4980	±6220	±4100	±4600	±2360	±3520
		Fx	Fy	Fz	Mx	My	Mz
	DN	Force (N)			Moment (Nm)		

Nozzle Allowable Force & Moment

DEEP BLUE PUMP CO. APIFLO-MK 80-120X8 General Arrangement

REV.	DATE	DESCRIPTION	ORIG. BY	PREP. BY	CHKD. BY	APPD. BY	AUTH. BY
05	05-Mar-2013	FOR APPROVAL		Will	Andy	Ryan	
04	29-Dec-2012	FOR APPROVAL		Will	Andy	Ryan	
03	24-Dec-2012	FOR APPROVAL		Will	Andy	Ryan	
02	06-Nov-2012	FOR APPROVAL		Will	Andy	Ryan	
01	11-Oct-2012	FOR APPROVAL		Will	Andy	Ryan	

West Karoon Oil Fields
Early Production Units
(Arvandan)

AOGC
ARVANDAN OIL AND GAS COMPANY

P.O. No.: STAGE: SCALE:

DEEP BLUE PUMP CO. | MAYSUN Engineering & Construction Company | EIED | Energy Development Pioneer Co. شرکت پیشرو توسعه انرژی

DRAWING TITLE:

General drawing for WATER INJECTION PUMPS(POINTS 1 & 2)
(0510-PA-001 A/B/C/D)

DRAWING No.: VD-AOGC-GA-GEN-5001-0005 SHEET No. 1 OF 1 REV. 05