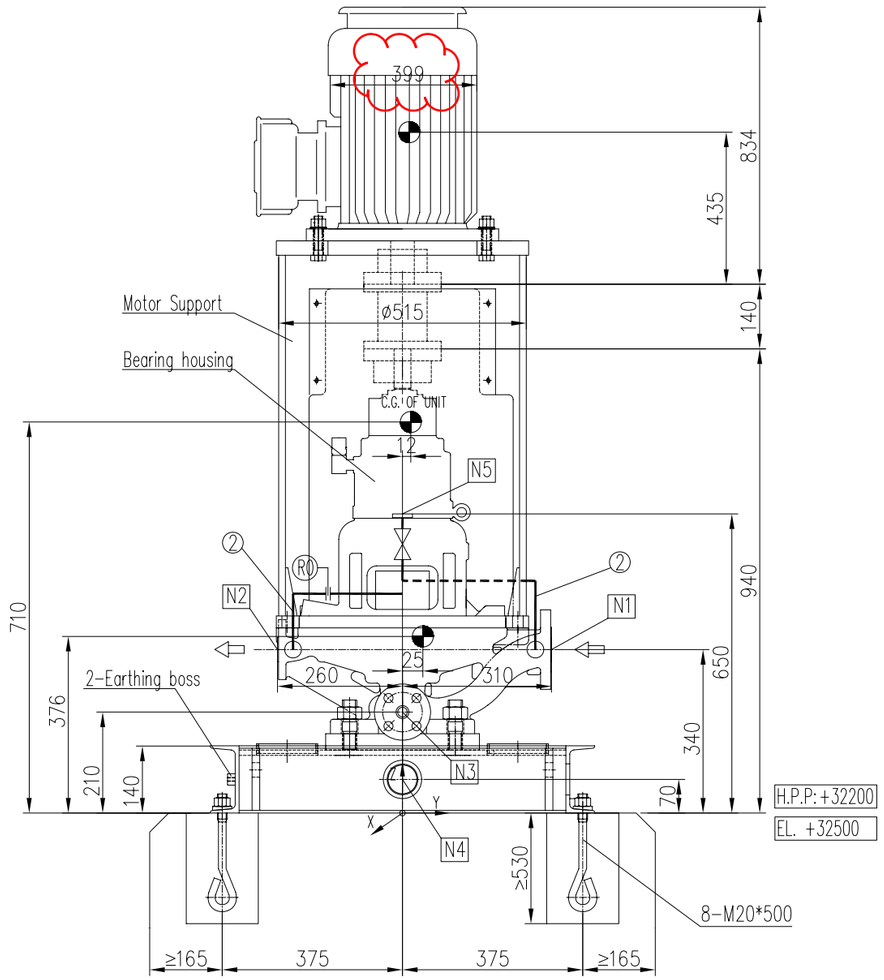

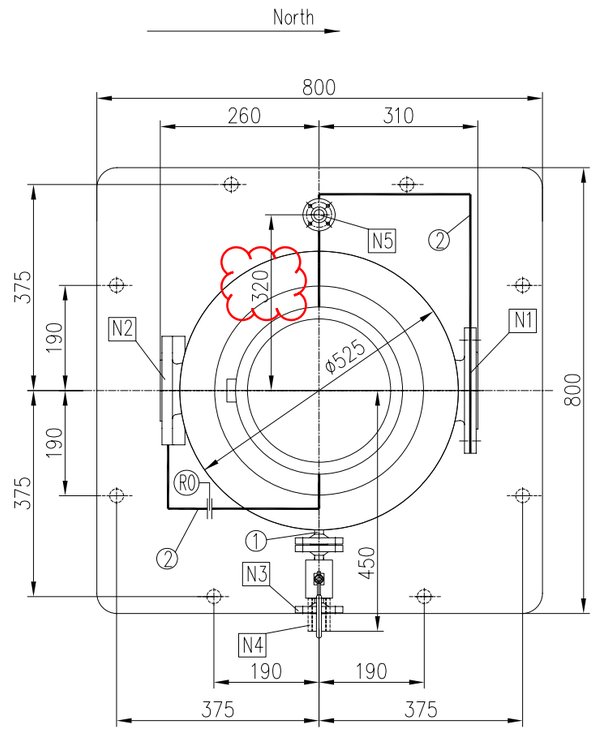

PROCESS CONNECTIONS			
Code	Description	Size & Rating	Remark
N1	Pump Suction Flange	2", ASME B16.5 300LB RF	
N2	Pump Discharge Flange	1", ASME B16.5 300LB RF	
N3	Pump Drain Flange	3/4", ASME B16.5 300LB RF	Flange with ball valve
N4	Baseplate Drain	NPT 2"	
N5	Plan14 Vent Flange	3/4", ASME B16.5 300LB RF	Flange with ball valve

Pipeline Description	
1	Pump Drain
2	Plan14 Flushing pipeline

PUMP INFORMATION	
Item No:	05-445-P-2A/B
Service:	LOW PRESSURE CONDENSATE PUMPS
Model:	EAP 25K2-315-L
Seal Plan:	14+61
Motor:	30KW-2960RPM

REFERENCE DRAWING	DWG NO.
Motor outline Drawing	BU-05-VD-303-EL-DRW-4452-091
Coupling Drawing	BU-05-VD-303-MA-DRW-4452-035
Pump data sheet	BU-05-VD-303-MA-DSH-4452-011

Note:
1. Rotation: Clockwise viewed from drive-end.
2. Vibration Level complies to API610 requirement, table 8 and table 9.

Code1	☐	(Approved) No comment and the document is released for Manufacturing
Code2	☐	(Approved with comments) Vendor shall correct, revise and resubmit the document The document is released for manufacturing
Code3	☐	(Commented) : Vendor shall correct / revise & resubmit document
Code4	☐	Not Acceptable quality (Reject)

The above checking result by EIED shall in no way relieve Vendor of any liability, obligation and responsibility out of the purchase order and the mutual agreement in writing

EIED
BUSHEHR PROJECT

DATE :
DEPT:
Signature :

WEIGHT TABLE		
PUMP+MOTOR SUPPORT	330	KG
MOTOR	294	KG
BASEPLATE	125	KG
TOTAL WEIGHT	759	KG
ROTOR WEIGHT	21	KG
MAX. MAINTENANCE WEIGHT	127	KG

Remark:
1. Moment of inertia: 0.17 kg.m2

REV.	DATE	PURPOSE OF ISSUE	PREP. BY	CHKD. BY	APPD. BY	AUTH. BY
03	26/08/15	FOR APPROVAL	Will	Andy	Tino	AAP
02	20/07/15	FOR APPROVAL	Will	Andy	Tino	AAP
01	12/06/15	FOR APPROVAL	Will	Andy	Tino	AAP
00	15/02/15	FOR APPROVAL	Will	Andy	Tino	AAP

Gas Sweetening, Sulphur Recovery, C2 Recovery, Fractionation and Inter Connection Pipeline Between Plants Project

BUSHEHR PETROCHEMICAL COMPANY

P.O No.: A315.753AME

SCALE:

DEEP BLUE PUMP

EIED Energy Industries Engineering & Design Co.

DRAWING TITLE:
Pump Outline Drawing for LOW PRESSURE CONDENSATE PUMPS
05-445-P-2A/B

DRAWING No.: BU-05-VD-303-MA-DRW-4452-011 SHEET No. 1 OF 1

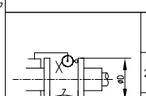

D≤200	X	≤0.05
	Y	≤0.05
	Z	Z±0.1
200<D≤300	X	≤0.08
	Y	≤0.08
	Z	Z±0.15
300<D≤400	X	≤0.10
	Y	≤0.10
	Z	Z±0.2

MAX. ALLOWABLE MISALIGNMENT(mm)

Anchor Bolt
M20x500
Anchor bolts will be supplied by DBP

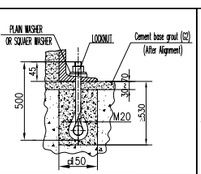

PUMP END

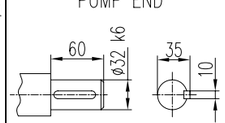

LIFTING

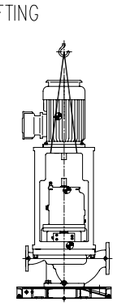

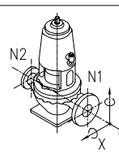

EARTHING BOSS

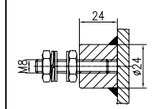

DISCHARGE	1"	±1420	±1780	±1160	±920	±460	±700
	inch	Fx	Fy	Fz	Mx	My	Mz
	DN	Force (N)			Moment(Nm)		
SUCTION	2"	±1420	±1780	±1160	±920	±460	±700
	inch	Fx	Fy	Fz	Mx	My	Mz
	DN	Force (N)			Moment(Nm)		

Nozzle Allowable Force & Moment

MOTOR END

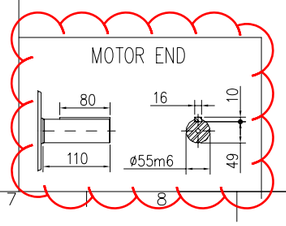

Static loading calculation results		
FXStatic=±	2840	N
FYStatic=±	3560	N
FZStatic=±	-5280/9920	N
MXStatic=±	3633/3790	N*m
MYStatic=±	1886	N*m
MZStatic=±	2209	N*m

Dynamic loading calculation results		
FXdynamic=±	79	N
FYdynamic=±	79	N
FZdynamic=±	0	N
MXdynamic=±	82	N*m
MYdynamic=±	82	N*m
MZdynamic=±	118.3/0	N*m