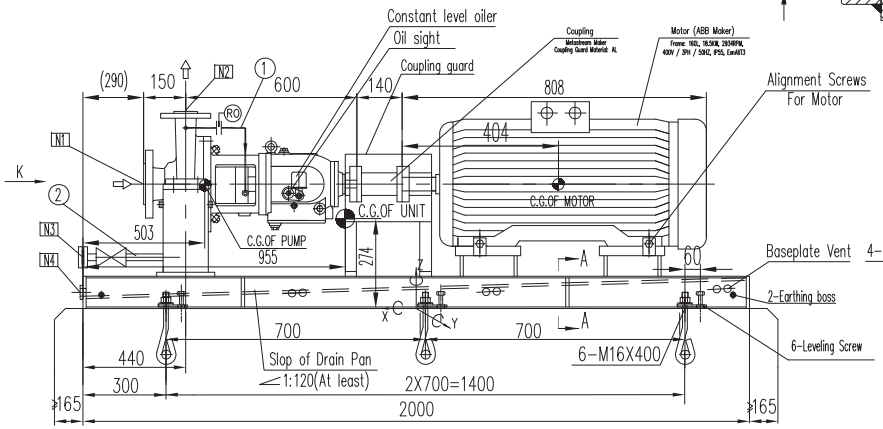

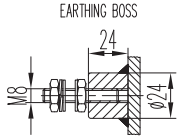

K View

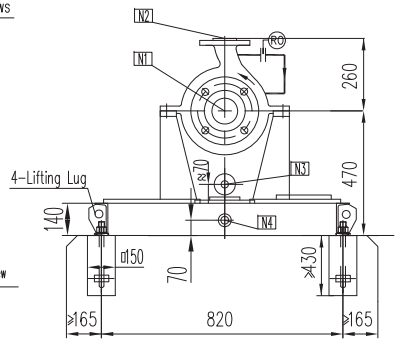

A-A

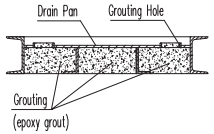

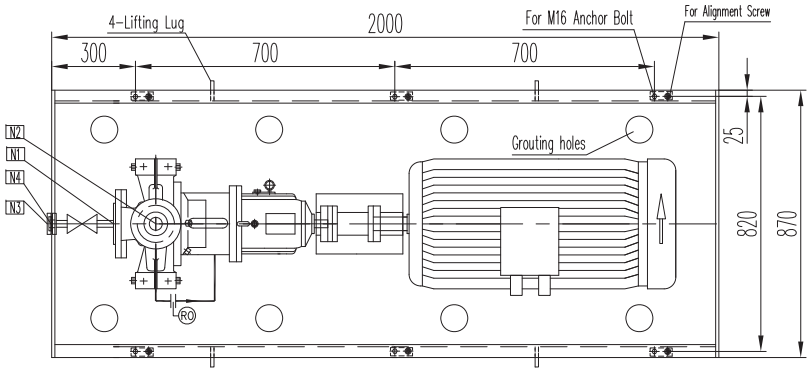

PLAN VIEW

ANCHOR BOLT

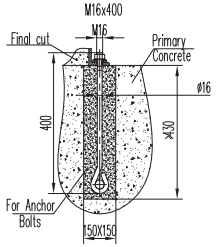

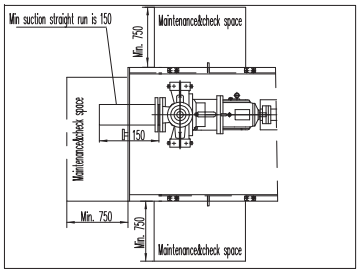

PROCESS CONNECTIONS			
Code	Size & Rating	Description	Remark
N1	2"-ANSI 300Lb-RF	Suction	
N2	1"-ANSI 300Lb-RF	Discharge	
N3	3/4"-ANSI 300Lb-RF	Pump Drain	Flange with valve & blind flange
N4	G2"	Baseplate Drain	

Pipeline Description	
1	Plan 11 Flushing Pipe
2	Pump Drain Pipe

WEIGHT TABLE			
PUMP	:	247	KG
MOTOR	:	227	KG
SEAL SYSTEM	:	-	KG
BASEPLATE	:	450	KG
OTHERS	:	18	KG
TOTAL WEIGHT	:	942	KG

Maximum Allowable Amplitude For Foundation			
Velocity(PEAK)	:	4	mm/s
Displacement	:	25.4	μm

GENERAL NOTES

PUMP INFORMATION	
Item No.:	113-P-111, 113-P-211
Unit:	113
Service:	BUTANE SETTLER WATER MAKE UP PUMPS
Model:	APIFLO-P 25K2-315
Seal Plan:	11+61
Motor:	18.5KW - 2934RPM

1. Valve type of pump drain is ball valve.
2. The pump is self vent

REFERENCE DRAWINGS	DWG NO.
MOTOR OUTLINE DRAWING	VP-SP2021-ON-MA-113-P111-0014
COUPLING DRAWING	VP-SP2021-ON-MA-113-P111-0008

Code1	■	(Approved) Vendor to submit "For Final (No comment & release for manufacturing)
Code2	☐	(Approved with comments) Vendor shall correct / revise & submit it as "For Final" (Released for manufacturing if change incorporated as indicated)
Code3	☐	(Commented) : Vendor shall correct / revise & resubmit . It as " For Approval" of the date specified : (Corrected documents to be
Code4	☐	Not Acceptable quality (Reject)

The above checking result by OIEC shall in no way relieve Vendor of any liability, obligation and responsibility out of the purchase order and the mutual agreement in writing

OIEC-SP 20&21

DATE : 01/12/2013
DEPT: Machinery
Signature : Salem

Only for internal review					
CV	PI	EL	IN	ME	MA
ST	BU	PR	SA	HV	TL

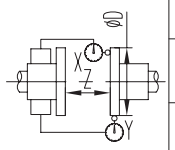

D≤200	X	≤0.05	
	Y	≤0.05	
	Z	Z±0.1	
200<D≤300	X	≤0.08	
	Y	≤0.08	
	Z	Z±0.15	
300<D≤400	X	≤0.10	
	Y	≤0.10	
	Z	Z±0.2	

MAX. ALLOWABLE MISALIGNMENT(mm)

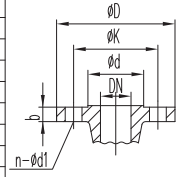

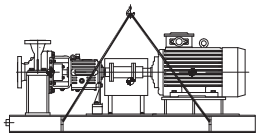

Center of Gravity List		
PUMP	X	497
	Y	0
	Z	470
MOTOR	X	-584
	Y	0
	Z	470
UNIT	X	45
	Y	0
	Z	274

Rotation: clockwise viewed from the drive-end

Static loading calculation results		
FXStatic=±	3200	N
FYStatic=±	2580	N
FZStatic=±	-5781/11661	N
MXStatic=±	3354	N*m
MYStatic=±	4647/4580	N*m
MZStatic=±	3058	N*m

Dynamic loading calculation results		
FXdynamic=±	0	N
FYdynamic=±	44	N
FZdynamic=±	44	N
MXdynamic=±	81/-40	N*m
MYdynamic=±	25	N*m
MZdynamic=±	25	N*m

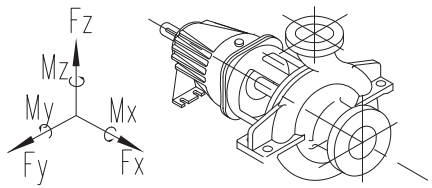

DISCHARGE	1"	±1420	±1160	±1780	±920	±460	±700
	Inch	Fx	Fy	Fz	Mx	My	Mz
	DN	Force (N)			Moment (Nm)		
SUCTION	2"	±1780	±1420	±1160	±920	±460	±700
	Inch	Fx	Fy	Fz	Mx	My	Mz
	DN	Force (N)			Moment (Nm)		

Nozzle Allowable Force & Moment

N3	Drain	ANSI B16.5 300# RF	3/4"	117.3	15.7	82.5	42.9	4-ø18
N2	Discharge	ANSI B16.5 300# RF	1"	124	17.5	89	50.8	4-ø18
N1	Suction	ANSI B16.5 300# RF	2"	165	22.3	127	92	8-ø18
	Name	Standard	DN	ØD	b	ØK	Ød	n-Ød1

Flange Size

REV.	DATE	DESCRIPTION	ORIG.	PREP.	CH'D.	APP'D.	Contractor APP'D
2	28.Oct.2013	FOR APPROVAL	DBP	Eric	Ryan	Tino	
1	14.Aug.2013	FOR APPROVAL	DBP	Eric	Ryan	Tino	
0	23.MAY.2013	FOR APPROVAL	DBP	Eric	Ryan	Tino	

SOUTH PARS GAS FIELD DEVELOPMENT-
PHASES 20 & 21, ASSALUYEH-IRAN
ONSHORE FACILITIES

NIOC
PARS OIL AND GAS COMPANY

PROJECT No.: POGC-572-88-35 | DOC.CLASS: | SCALE :

DEEP BLUE PUMP CO.

OIEC

113-P-111 113-P-211
BUTANE SETTLER WATER MAKE UP PUMPS
GENERAL ARRANGEMENT DRAWING

DRAWING No. VP-SP2021-ON-MA-113-P111-0001 | SHEET No. 1 OF 1 | REV. 2