NO	NOTES
1	CASE DRAIN KIT : -CONNECTIONS ARE BUTT WELDED, SCHEDULE 160 -FLANGES & PIPE MATERIAL : STAINLESS STEEL *WELDING PROCEDURES : PN.05.29-06/E, SDJ-02-02 (ST.STL. TO ST.STL.)
2	API PLAN 11 & VENT KITS (PORT 6): -CONNECTIONS ARE BUTT WELDED, SCHEDULE 160 -FLANGES & PIPE MATERIAL : STAINLESS STEEL *WELDING PROCEDURES : PN.05.29-06/E, SDJ-02-02 (ST.STL. TO ST.STL.)
3	LIQUID BUFFER INLET & OUTLET KIT (PORTS 2 & 7): -CONNECTIONS ARE BUTT WELDED, SCHEDULE 80 -FLANGES & PIPING MATERIAL: STAINLESS STEEL -WELDING PROCEDURE: PN.05.29-06/E, SDJ-02-02 (ST.STL. TO ST.STL.)
4	COOLING WATER KIT: -CONNECTIONS ARE SCREWED, SCHEDULE 80 -FLANGES ARE SOCKET WELDED TYPE -FLANGES & PIPING MATERIAL: CARBON STEEL -WELDING PROCEDURE: PN.05.29-02/E, SDJ-02-01 (CARB.STL. TO CARB.STL.)
5	FLANGES FACING FINISH : Ra 3.2-6.3um
6	MAIN MOTOR "ABB" FRAME 315 , TYPE : M3GP 315 SMA 2 ExnAIIT3 110 KW , 2982 RPM , 400V/3PH/50HZ MOUNTING : IM2011 , V1 (FLANGE) IP55 , ExnAIIT3 (SUPPLIED BY SUNDYNE)
7	MECHANICAL SEAL CODE API FLUSH PLANS : 11 & 52

LTR	DEC	REVISIONS	DATE/NAME
1	11083	-MODIFIED ACCORDING TO CUSTOMER COMMENTS	13/10/05 L.G.
2	11201	-MODIFIED ACCORDING TO CUSTOMER COMMENTS	07/12/05 L.G.

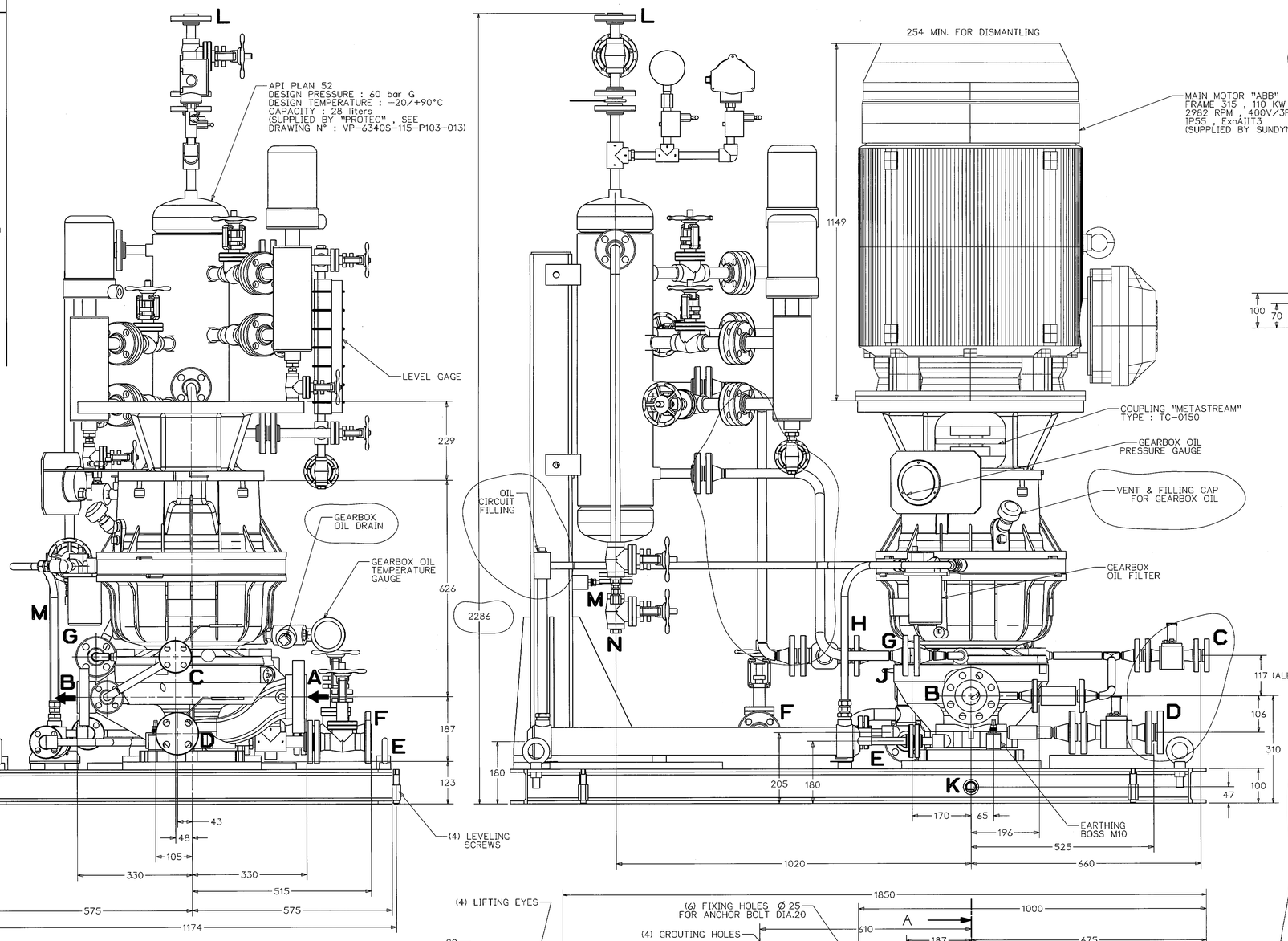

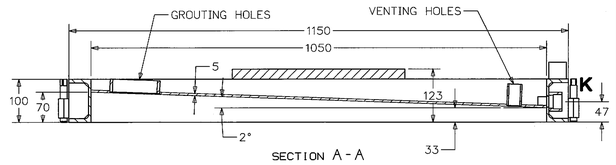

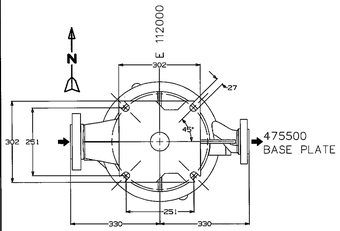

BASEPLATE DETAIL

MAXIMUM ALLOWABLE FORCES & MOMENTS ON FLANGES OF PUMP CASE

TWICE TIME VALUES GIVEN IN TABLE 4 PARAGRAPH 5.5.2 — 10th EDITION OF API-610 PARAGRAPH 5.5

suction flange coordinate system — FORCE = N , MOMENT = N.M

FLANGE	Fx	Fy	Fz	Mx	My	Mz
SUCTION 3"	2140	2660	1780	1900	940	1440
DISCHARGE 2"	1420	1780	1180	920	460	700

WEIGHT TABLE

FLUID END	:	222 KG
GEARBOX	:	122 KG
ADAPTOR	:	35 KG
COUPLING	:	21 KG
EQUIPMENT	:	45 KG
BEDPLATE	:	265 KG
API-52	:	150 KG
MOTOR	:	880 KG
TOTAL WEIGHT	:	1740 KG

CONNECTIONS TABLE

LTR	DESCRIPTION	TYPE/SIZE
A	PUMP SUCTION	FLANGE 3"-600#RF
B	PUMP DISCHARGE	FLANGE 2"-600#RF
C	VENT & API-11 (PORT 6)	BLIND FLANGE 1/2"-600#RF
D	PUMP CASE DRAIN	BLIND FLANGE 1"-600#RF
E	GEARBOX OIL COOLER INLET	GATE VALVE FLANGED 1"-300#RF
F	GEARBOX OIL COOLER OUTLET	GLOBE VALVE FLANGED 1"-300#RF
G	BUFFER FLUID INLET (PORT 7)	FLANGE 3/4"-600#RF
H	BUFFER FLUID OUTLET (PORT 2)	FLANGE 3/4"-600#RF
J	SEAL DRAIN (PORT 1)	1/2"NPT Female (OPEN)
K	BEDPLATE DRAIN	1"NPT Female
L	VENT TO FLARE (API-52)	FLANGE 3/4"-600#RF
M	FILLING (API-52)	QUICK CONNECTION 1/2" NPT Male
N	DRAIN (API-52)	GATE VALVE 3/4" NPT Female with PLUG

SEAL PORTS DATA

1	SEAL DRAIN
2	BUFFER OUT
5	SEAL FLUSH
6	VENT & API-11
7	BUFFER IN

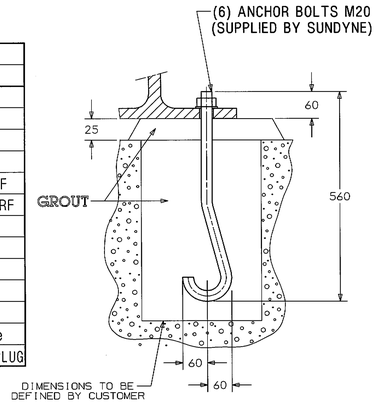

FOUNDATION DETAIL

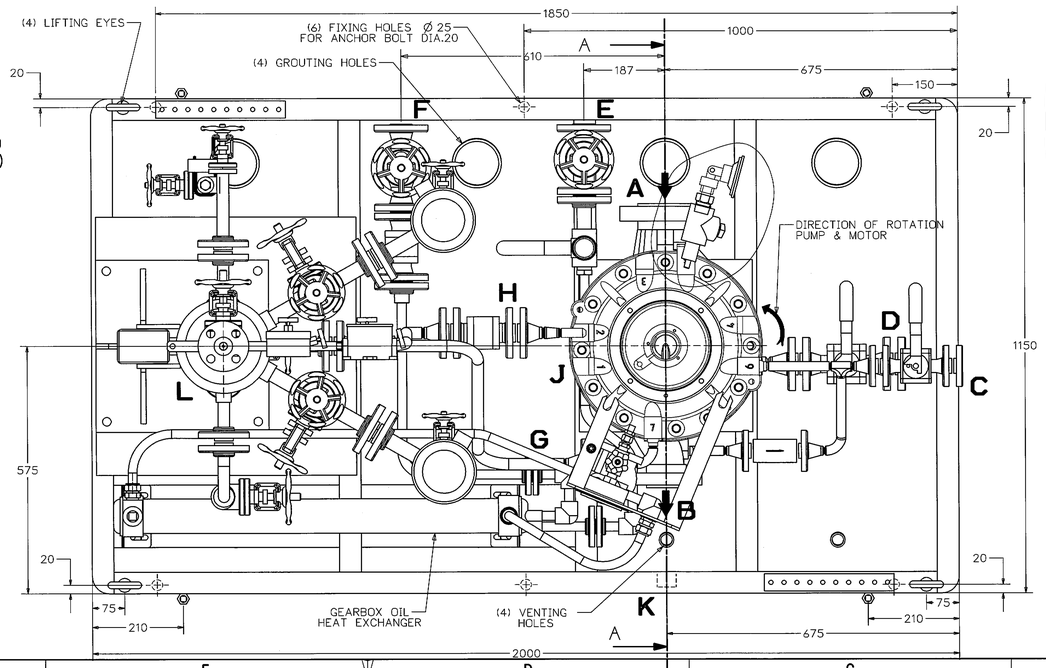

DRAWN.: L.GRILLOT	09-JUN-05	SUNDSTRAND INTERNATIONAL S.A.	Sundyne
ENG.: B.BENUCCI	09 DEC 2005	S.P.30-21604, LONGVIC Cedex FRANCE	
CHKR.: P.SOUDANT		TEL. 03.80.38.33.00 FAX. 03.80.38.33.69	
MFR.: N/A			
SCALE: 1/4		TITLE: OUTLINE DRAWING FOR LMV-311, S/N. D-D870487-1-A/B	
TYPE OF PROJECTION			
DIMENSIONS: MILLIMETERS	SIZE A0	DWG NO. KT76DF23_OUT	SH. 1 OF 1 REV. 2
GENERAL TOLERANCES +/- 5 mm		ORIGINE DWG.NO : mm_kt76df23_as	
		REF.DWG.NO.: /	S/N. D-D870487-1-A/B
UNIGRAPHICS V18	CAD FILE NO.: pmp\lmv-311\d-d870487-1-a_b\kt76df23_out_revb.prt		

AS BUILT
09 DEC. 2005

OUTLINE DRAWING INFORMATION

DRAWING NO. KT76DF23_OUT — SHEET 1 OF 1
REVISION 2 — DATE 07-DEC-05
CERTIFIED CORRECT BY — DATE 09 DEC. 2005

CUSTOMER APPLICATION DATA

SERIAL NO. D-D870487-1-A/B
CUSTOMER ITEM NO. 115-P-103/203
CUSTOMER MAN FERROSTAAL
P.O.NO. 83405 0910 01 0017 H
FINAL USER OIEC - GS / NIOC
LOCATION IRAN
PROJECT BUTANE PRODUCT PUMP

REV.	DATE	DESCRIPTION	ORIG.	PREP.	CHKD.	APPD.	CONT. APPD.
2	07/12/05	MODIFIED ACCORDING TO CUSTOMER COMMENTS	L.G.	L.G.	P.S.	P.S.	
1	13/10/05	MODIFIED ACCORDING TO CUSTOMER COMMENTS	L.G.	L.G.	P.S.	P.S.	

SOUTH PARS GAS FIELD DEVELOPMENT
PHASES 9 & 10, ASSALUYEH-IRAN
ONSHORE FACILITIES

N.I.O.C
PARS OIL AND GAS COMPANY

PROJECT No.: POGC-760-81-156	DOC. CLASS.	SCALE:
Sundyne / GS E&C	OIEC	IOEC

TITLE: OUTLINE DRAWING (115-P-103/203)

DRAWING No.	VP-6340S-115-P103-001	SHEET No. 1 OF 1	REV. 2