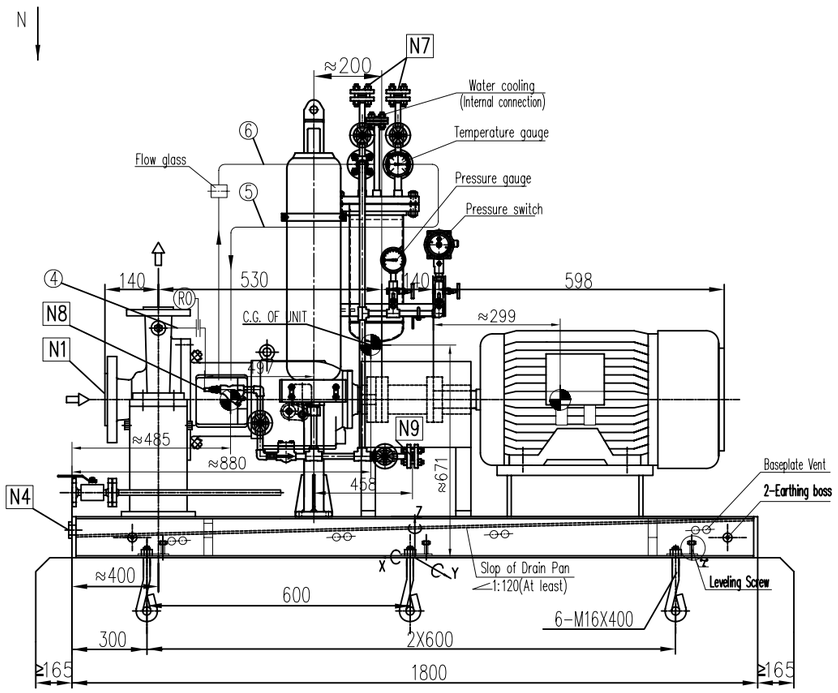

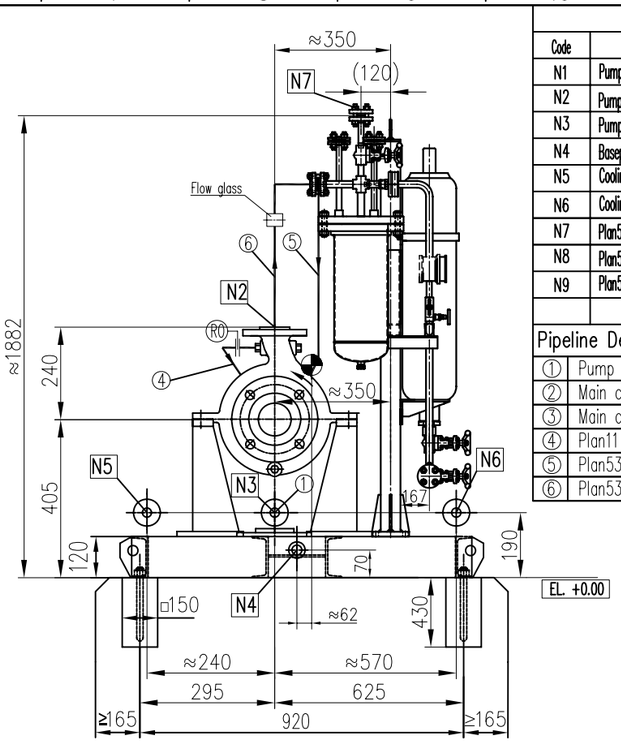

PROCESS CONNECTIONS			
Code	Description	Size & Rating	Remark
N1	Pump Suction Flange	3", ASME B16.5 300LB RF	
N2	Pump Discharge Flange	2", ASME B16.5 300LB RF	
N3	Pump Drain Flange	3/4", ASME B16.5 300LB RF	Flange with ball valve
N4	Baseplate Drain	NPT 2"	
N5	Cooling Water Inlet Flange	1", ASME B16.5 150LB RF	Flange with ball valve
N6	Cooling Water Outlet Flange	1", ASME B16.5 150LB RF	Flange with ball valve
N7	Plan53B Vent	1/2", ASME B16.5 1500LB RF	Flange with gate valve
N8	Plan53B Filling	1/2" NPT, Quick Fittings	
N9	Plan53B Drain	1/2", ASME B16.5 1500LB RF	Flange with gate valve

Pipeline Description	
①	Pump Drain
②	Main cooling water inlet
③	Main cooling water outlet
④	Plan11 Flushing pipeline
⑤	Plan53B Flushing pipeline (to seal chamber)
⑥	Plan53B Flushing pipeline (from seal chamber)

PUMP INFORMATION	
Item No:	01-130-P-4 A/B
Service:	TGT REFLUX PUMPS
Model:	EAP 50K1-200-9
Seal Plan:	11+53B
Motor:	11KW-2950RPM
Motor Critical Speed:	6700RPM

REFERENCE DRAWING	DWG NO.
Seal System Drawing	BU-01-VD-307-MA-DRW-1304-070
Motor outline Drawing	BU-01-VD-307-MA-DRW-1304-102
Coupling Drawing	BU-01-VD-307-MA-DRW-1304-038
Pump data sheet	BU-01-VD-307-MA-DSH-1304-006

Note:
1. The pump is self vent.
2. Rotation: Clockwise viewed from drive-end.
3. Vibration Level complies to API610 requirement, table 8 and table 9.

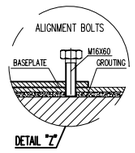

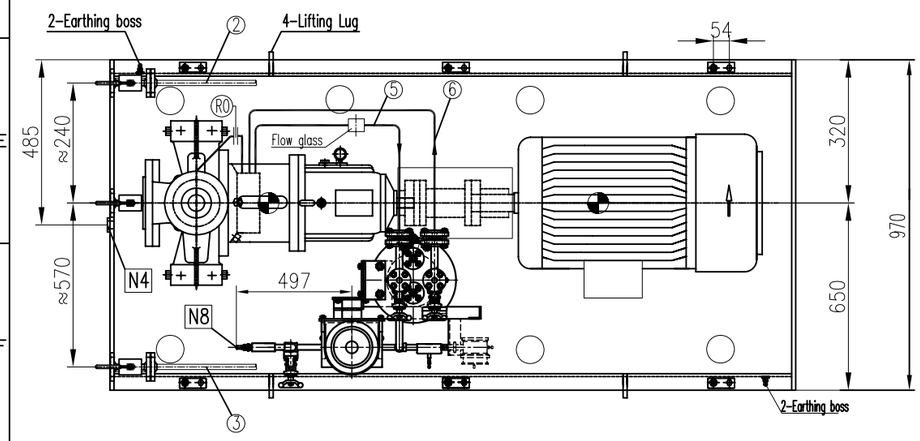

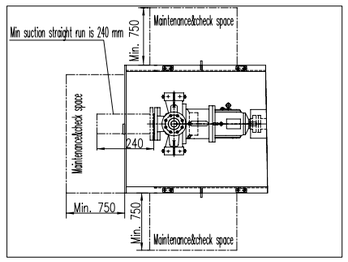

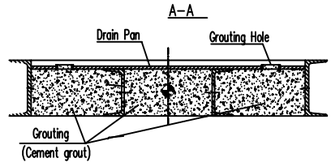

WEIGHT TABLE		
PUMP	106	KG
MOTOR	151	KG
SEAL SYSTEM	336	KG
BASEPLATE	179	KG
OTHERS	50	KG
TOTAL WEIGHT	822	KG
ROTOR WEIGHT	13.5	KG
MAX. MAINTENANCE WEIGHT	67.5	KG

Remark:
1. Moment of inertia: 0.051 kg.m2

Static loading calculation results		
FXStatic=±	4080	N
FYStatic=±	3300	N
FZStatic=±	-3798/10918	N
MXStatic=±	4435	N*m
MYStatic=±	6001/4843	N*m
MZStatic=±	4090	N*m

Dynamic loading calculation results		
FXdynamic=±	0	N
FYdynamic=±	29	N
FZdynamic=±	29	N
MXdynamic=±	47/-24	N*m
MYdynamic=±	15	N*m
MZdynamic=±	15	N*m

Code1	☑	(Approved) No comment and the document is released for Manufacturing	
Code2	☐	(Approved with comments) Vendor shall correct, revise and resubmit the document The document is released for manufacturing	
Code3	☐	(Commented) : Vendor shall correct / revise & resubmit document	
Code4	☐	Not Acceptable quality (Reject)	

The above checking result by EIED shall in no way relieve Vendor of any liability, obligation and responsibility out of the purchase order and the mutual agreement in writing

EIED
BUSHEHR PROJECT

DATE : 4 November 2015
DEPT: MA
Signatu M.F.
CODE 1

REV.	DATE	PURPOSE OF ISSUE	PREP. BY	CHKD. BY	APPD. BY	AUTH. BY
02	29/08/15	FOR APPROVAL	Eric	Andy	Tino	AAP
01	08/07/15	FOR APPROVAL	Eric	Andy	Tino	AAP
00	25/03/15	FOR APPROVAL	Eric	Andy	Tino	AAP

Gas Sweetening, Sulphur Recovery, C2 Recovery, Fractionation and Inter Connection Pipeline Between Plants Project

BUSHEHR PETROCHEMICAL COMPANY

P.O No.: A315.760AME

SCALE:

DEEP BLUE PUMP

EIED
Energy Industries Engineering & Design Co.

DRAWING TITLE:
Pump Outline Drawing for TGT REFLUX PUMPS
01-130-P-4 A/B

DRAWING No.: BU-01-VD-307-MA-DRW-1304-006 SHEET No. 1 OF 1

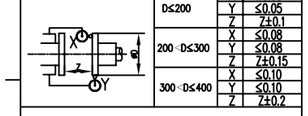

D≤200	X	≤0.05
	Y	≤0.05
	Z	Z±0.1
200<D≤300	X	≤0.08
	Y	≤0.08
	Z	Z±0.15
300<D≤400	X	≤0.10
	Y	≤0.10
	Z	Z±0.2

MAX. ALLOWABLE MISALIGNMENT(mm)

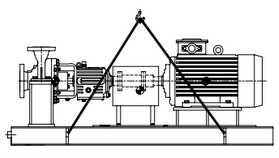

Anchor Bolt
M16x400
Anchor bolts will be supplied by DBP

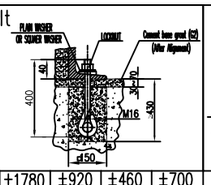

PUMP END

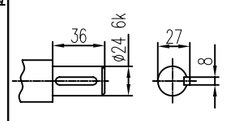

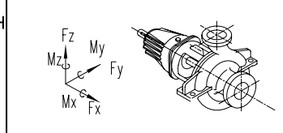

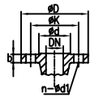

DISCHARGE	2"	±1420	±1160	±1780	±920	±460	±700
	inch	Fx	Fy	Fz	Mx	My	Mz
	DN	Force (N)			Moment(Nm)		
SUCTION	3"	±2660	±2140	±1780	±1900	±940	±1440
	inch	Fx	Fy	Fz	Mx	My	Mz
	DN	Force (N)			Moment(Nm)		

Nozzle Allowable Force & Moment

EARTHING BOSS

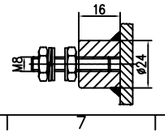
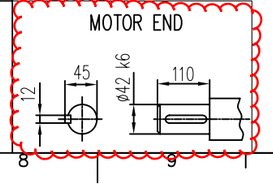
MOTOR END