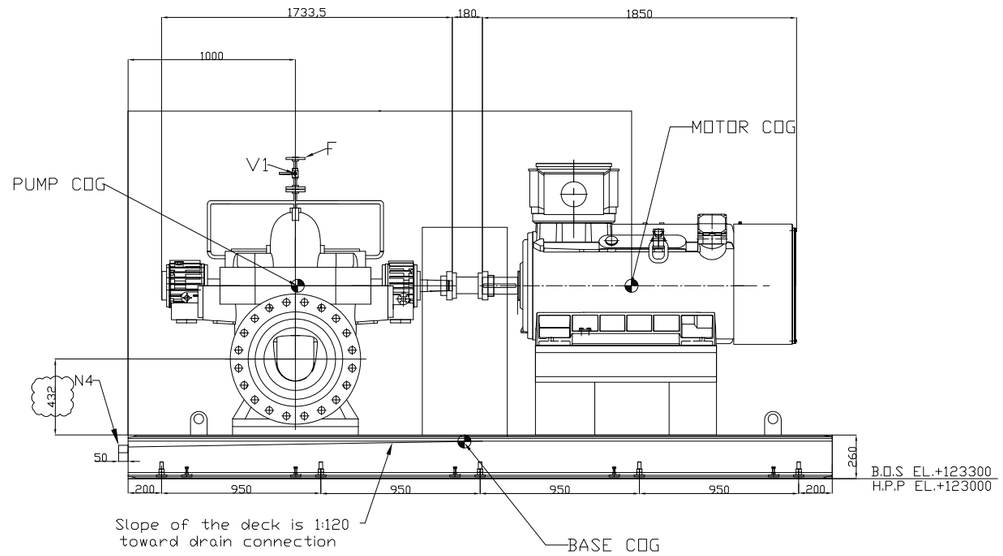

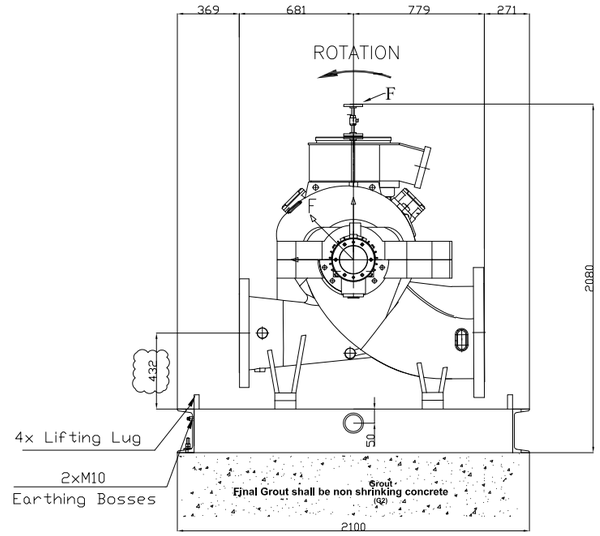

view A

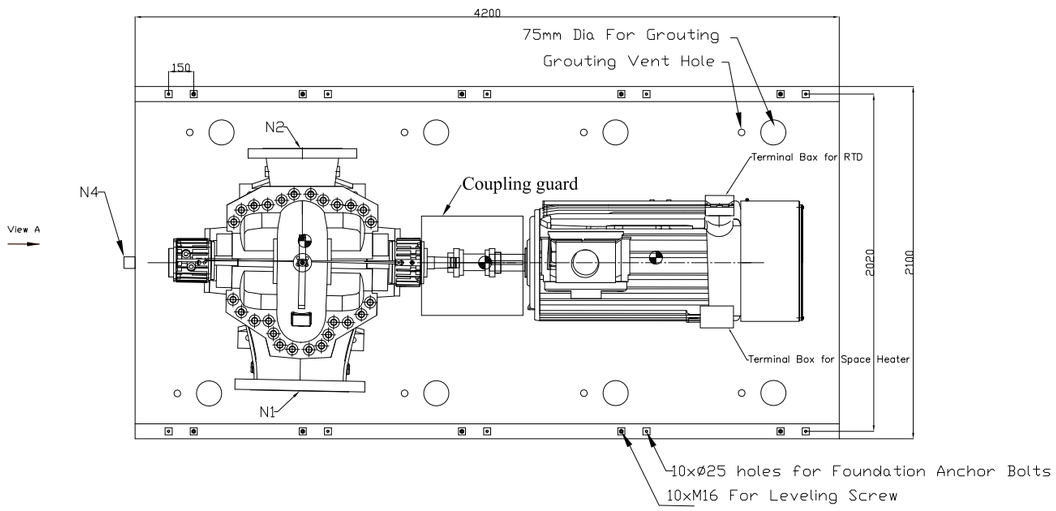

POS.	Q.	DN	CONN. TYPE	DESCRIPTION	O	G	No. of holes	d	R	S
N1	1	20″	ASME B16.5 #300 RF	Suction Nozzle	775	685.8	24	35	N/A	N/A
N2	1	16″	ASME B16.5 #300 RF	Discharge Nozzle	597	539,8	16	28,5	N/A	N/A
N4	1	2″	NPT threaded	Base Plate Drain						
V1	1	3/4″	Ball valve #800	Pump Vent Valve(By Vendor)						
F	1	3/4″	ASME B16.5 #300 RF	Vent Flange(By Vendor)	117	82.6	4	19	42.9	1.6

Mass Moment inertia Motor :	4.7	kgm^2
Mass Moment inertia Pump:	1.716	kgm^2
Total Mass Moment of inertia :	6.416	kgm^2

Dynamic Load

Motor Dynamic Load : 7.66 KN

Pump dynamic Load : 6.6 KN

Dynamic Load : Fx: 10 KN
Fy: It can be ignored
Fz: 10 KN

Static Load

Motor Static Load : 23 KN

Pump Static Load : 23.6 KN

Moment

Motor Dynamic Moment : Mx: −30 N.M
My: 75.06 N.M
Mz: −30 N.M

Pump Dynamic Moment : Mx: 30 N.M
My: 14.9 N.M
Mz: 30 N.M

Total Dynamic Moment : Mx: 0
My: 89.96 N.M
Mz: 0

REFERENCE DOCUMENTS	DOC. NO.
Pump Data Sheet and Performance Curve for 40-P-225	VP-40-000-MA-0011-0026
Pump cross sectional drawing and Part list for 40-P-225	VP-40-000-MA-0011-0098
Coupling Drawing for 40-P-225	VP-40-000-MA-0011-0134
Motor data sheets for 40-P-225	VP-40-000-MA-0011-0170
Motor outline drawing for 40-P-225	VP-40-000-MA-0011-0242
Pump P&ID for 40-P-225	VP-40-000-MA-0011-0278

NOTE

1-All Dimensions are mm.
2-Material of base plate is Steel.
3-Material of hole plate is ASTM A193 Gr.B7 and nut A194 Gr 2H.
4-Maintenance Area is 2m from Motor and not less from other sides.
5-Vibration of Pump and Motor are according to ISO 2372.
6-Location of dynamic load is at the C.G.S

-Bolt material shall conform to specification ASTM A193 Grade B7 (anchor bolts shall be partly hot dip galvanized in thread length plus 100mm length embedded into concrete).
-Anchor bolt and nut will be supplied by IIP
-All nuts&washers shall be hot dip galvanized according to ASTM A153
-Grout thickness: 30mm

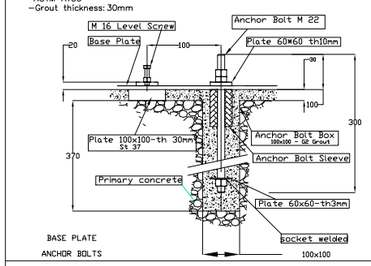

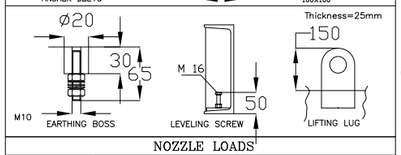

NOZZLE LOADS

	FORCE N				MOMENTS Nm			
	2XAPI 610				2XAPI 610			
	Fx	Fy	Fz	FR	Mx	My	Mz	MR
SUCTION :	20460	16900	13340	29700	14640	7320	10840	19640
DISCHARGE :	16900	13340	20460	29700	14640	7320	10840	19640

FOUNDATION LOADS (approx. weight)

PUMP :	2200	Kg
ROTOR PUMP :	153	Kg
MOTOR :	2300	Kg
ROTOR MOTOR :	400	Kg
BASE PLATE&SEALING SYSTEM :	1860	Kg
TOTAL :	6360	Kg

Max allowable vibration amplitude for foundation: 28.6 μm

VIBRATION LEVEL (ISO 2372)

Alarm : V(RMS) > 3 mm/sec

Trip : V(RMS) > 4.5 mm/sec

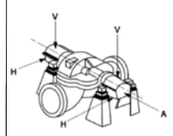

Max.MISSALIGNMENT

AXIAL 1.5 (mm)	RADIAL 1.2 (mm)	ANGULAR 0.5 (degree)

PUMP NOZZLES: ASME B16.5

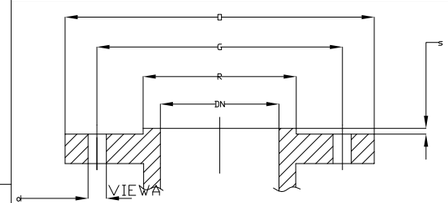

Flange Raised Face Roughness 125~250 AARH

ELECTRICAL MOTOR

MODEL :	SCHORCH	PHASE :	3
FRAME :	355	VOLTAGE :	6600
KW :	185	Hz :	50
Speed :	1487 RPM		

Pump Type: BB1 500-400-360

Sealing System Plan: 11

COUPLING & Coupling Guard
COUPLING MANUFACTURER: IIP Group
MODEL : Flexible Spacer Type

CENTER OF GRAVITY

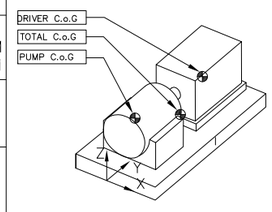

		(mm)
PUMP	X	−182
	Y	117
	Z	1150
DRIVER	X	0
	Y	3004
	Z	1150
BASE	X	0
	Y	2004
	Z	230
TOTAL	X	63
	Y	2024
	Z	881

Code1 ■ *Approved:*
No comment and the document is released for Manufacturing.

Code2 ☐ *Approved with Minor comment:*
Vendor shall correct, revise and resubmit the document.
The document can be released for Manufacturing if changes incorporated.

Code3 ☐ *Commented:*
Vendor shall correct, revise and resubmit the document by the date specified.
The document shall be revised under the Status of "R: Revised Issue".
All corrected documents shall be resubmitted before starting the Manufacturing.

Code4 ☐ *Not Accepted (Rejected):*
Vendor shall re-work/re-design/re-specify the contents of the documents according to the comments/ reasons for rejection. All corrected documents shall be resubmitted before starting the Manufacturing process. In this case vendor shall not proceed with subsequent work until receiving code 1 or code 2 or no code from CONSULTANT / OWNER / MC. VENDOR shall resubmit the documents with the same revision within (10) working days(including transmission/mailing time) after receiving the commented documents from CONSULTANT / OWNER / MC.

No Code ☐ *No Code(Only for" FOR INFORMATION" documents and "As-Built DWGs"*
Document has been submitted for CONSULTANT / OWNER / MC's information(FI) consistency, completeness and correctness of documents content is in VENDOR/EPC contractor responsibility.

Above checking results by EIED shall in no way relieve Vendor of any liability, obligation and responsibility out of the purchase order and the mutual agreement in writing.

EIED
DATE : 04.07.2022
DEPT. : MA
Signature : S.Razani

Only for internal review

CV	PI	EL	IN	ME	MA
ST	AR	PR	SA	HV	TL

REV.	DATE	STATUS	PURPOSE OF ISSUE	PREP.	CHKD.	APPD.	AUTH.
07	23.Jun.2022	R	Issue for Approval	A.K	M.B	M.M	GH.P
06	06.Jun.2022	R	Issue for Approval	A.K	M.B	M.M	GH.P
05	10.May.2022	R	Issue for Approval	A.K	M.B	A.N	GH.P
04	12.Apr.2022	R	Issue for Approval	A.K	M.B	A.N	GH.P
03	01.Mar.2022	R	Issue for Approval	A.K	M.B	A.N	GH.P
02	09.Jan.2022	R	Issue for Approval	A.K	M.B	A.N	GH.P
01	08.Dec.2021	R	Issue for Approval	A.K	M.B	A.N	GH.P
00	04.Sep.2021	F	Issue for Approval	M.B	S.G	A.N	GH.P

EIED

Soroush Mahestan Asaloyeh Company
HDPE Project

LLP GROUP
LLP DRILLING PERSIA CO.

P.O DESCRIPTION: Centrifugal pumps

Contract No. SMAC-HH-19/800 P.O No. KP-40-000-PS-MA-PO-0011

SCALE: None

DRAWING TITLE:
General Arrangement Drawing for 40-P-225

DRAWING NO. VP-40-000-MA-0011-0062

REV.	SHEET No.	SIZE
07	1 OF 1	A3

This document is the sole property of Soroush Mahestan Asaloyeh Co. and all information contained herein may neither be reproduced, used, disclosed, transmitted nor in any way made public without permission of the Owner.