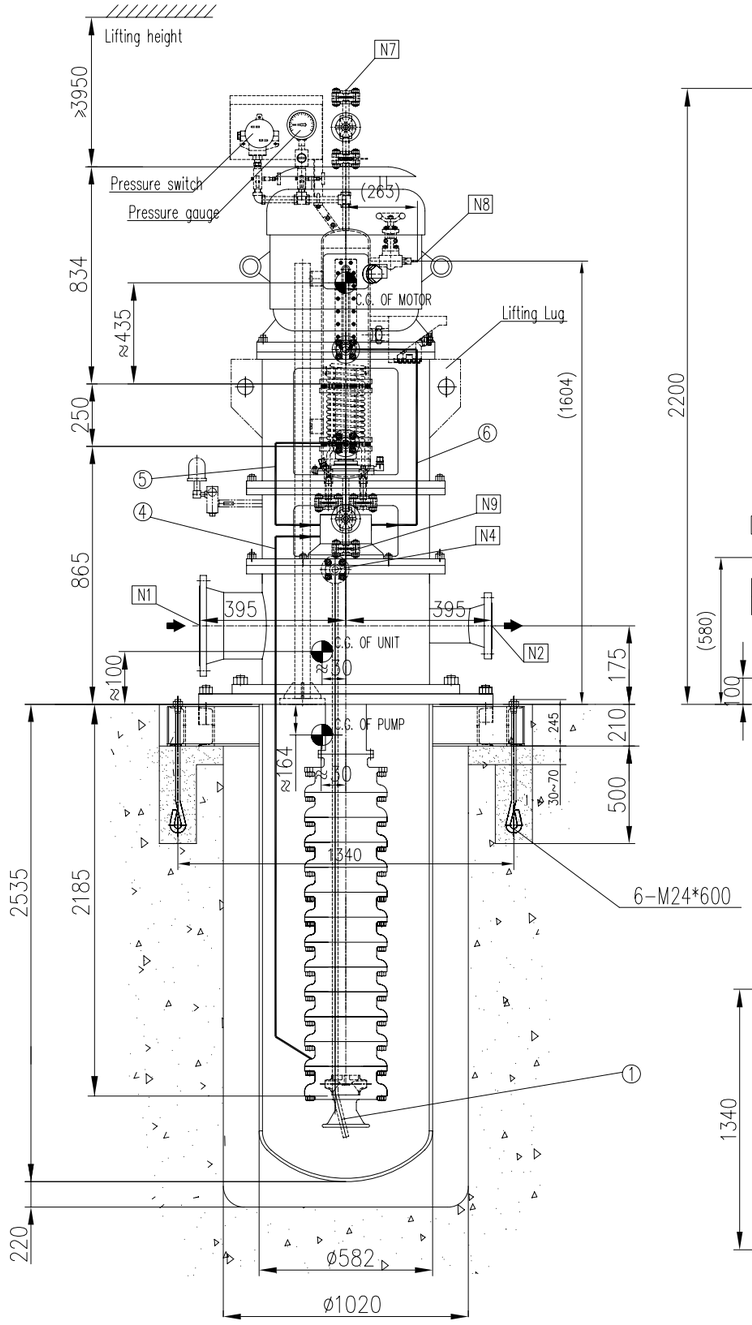

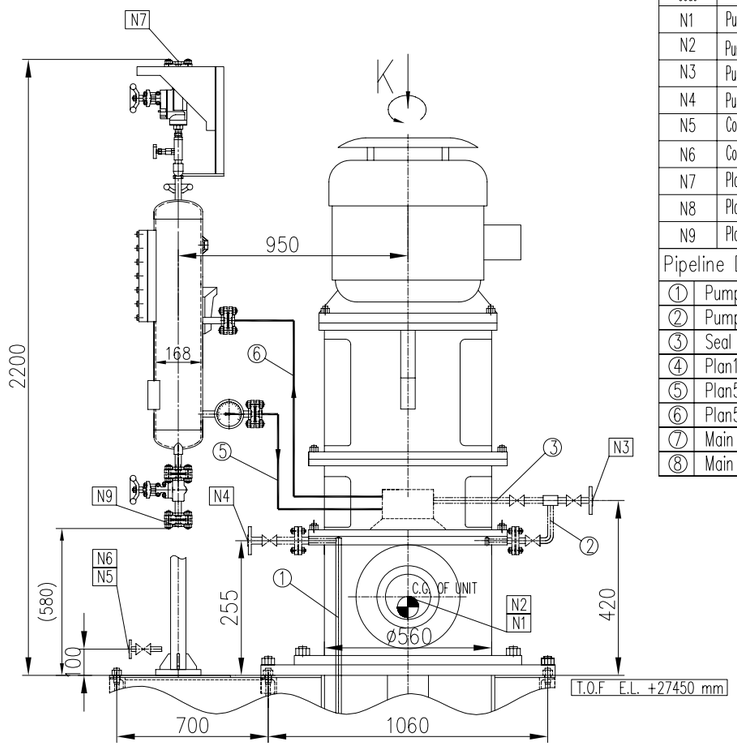

PROCESS CONNECTIONS			
Code	Description	Size & Rating	Remark
N1	Pump Suction Flange	2", ASME B16.5 300LB RF	
N2	Pump Discharge Flange	1", ASME B16.5 300LB RF	
N3	Pump Vent Flange	3/4", ASME B16.5 300LB RF	Flange with ball valve
N4	Pump Barrel Drain Flange	3/4", ASME B16.5 300LB RF	Flange with ball valve
N5	Cooling Water Inlet Flange	1", ASME B16.5 150LB RF	Flange with ball valve
N6	Cooling Water Outlet Flange	1", ASME B16.5 150LB RF	Flange with ball valve
N7	Plan52 Vent	1/2", ASME B16.5 600LB RF	Flange with gate valve
N8	Plan52 Filling	1/2" Quick Fittings	
N9	Plan52 Drain	1/2", ASME B16.5 600LB RF	Flange with gate valve

Pipeline Description	
①	Pump Barrel Drain pipeline
②	Pump Barrel Vent pipeline
③	Seal Chamber Vent Pipeline
④	Plan14 Flushing pipeline
⑤	Plan52 Flushing pipeline (to seal chamber)
⑥	Plan52 Flushing pipeline (from seal chamber)
⑦	Main cooling water inlet
⑧	Main cooling water outlet

PUMP INFORMATION	
Item No:	05-415-P-2A/B
Service:	OFF-SPEC TANK FLARE KO DRUM PUMPS
Model:	LDB 8.5-25X13-A
Seal Plan:	14+52
Motor:	22KW-2960RPM

REFERENCE DRAWING	DWG NO.
Seal System Drawing	BU-05-VD-303-MA-DRW-4152-058
Motor outline Drawing	BU-05-VD-303-EL-DRW-4152-092
Coupling Drawing	BU-05-VD-303-MA-DRW-4152-036
Pump Data Sheet	BU-05-VD-303-MA-DSH-4152-012

Note:
1. Rotation: Counterclockwise viewed from drive-end.
2. Vibration Level complies to API610 requirement, table 8 and table 9.

WEIGHT TABLE		
PUMP	1350	KG
MOTOR	294	KG
SEAL SYSTEM	70	KG
BASEPLATE	240	KG
OTHERS	50	KG
TOTAL WEIGHT	2004	KG
ROTOR WEIGHT	190	KG
MAX. MAINTENANCE WEIGHT	740	KG

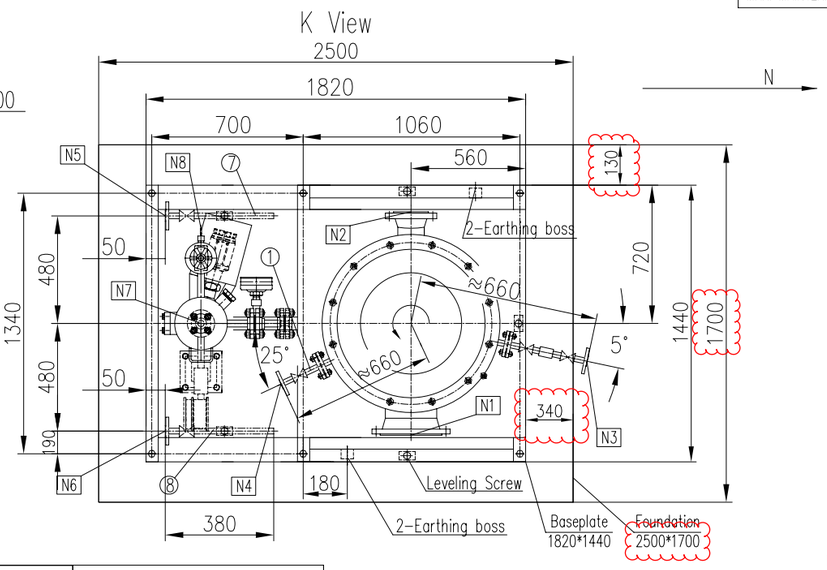

Code		
Code1	☑	(Approved) No comment and the document is released for Manufacturing
Code2	☐	(Approved with comments) Vendor shall correct, revise and resubmit the document The document is released for manufacturing
Code3	☐	(Commented) : Vendor shall correct / revise & resubmit document
Code4	☐	Not Acceptable quality (Reject)

The above checking result by EIED shall in no way relieve Vendor of any liability, obligation and responsibility out of the purchase order and the mutual agreement in writing

EIED
BUSHEHR PROJECT

DATE 24 January 2016
DEPT MA
Sign M.F.
CODE 1

REV.	DATE	PURPOSE OF ISSUE	PREP. BY	CHKD. BY	APPD. BY	AUTH. BY
06	23/12/15	FOR APPROVAL	Will	Andy	Tino	AAP
05	20/11/15	FOR APPROVAL	Will	Andy	Tino	AAP
04	15/10/15	FOR APPROVAL	Will	Andy	Tino	AAP
03	26/08/15	FOR APPROVAL	Will	Andy	Tino	AAP
02	20/07/15	FOR APPROVAL	Will	Andy	Tino	AAP
01	12/06/15	FOR APPROVAL	Will	Andy	Tino	AAP
00	15/02/15	FOR APPROVAL	Will	Andy	Tino	AAP

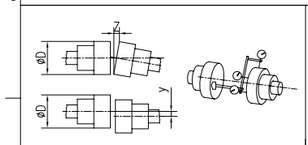

Outer Diameter Coupling (D)	Radial Displacement	Axial Tilt
D ≤ 200	< 0.05	< 0.2 / 1000
200 < D ≤ 300	< 0.08	< 0.3 / 1000
300 < D ≤ 400	< 0.1	< 0.4 / 1000
MAX. ALLOWABLE MISALIGNMENT(mm)		

LIFTING

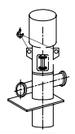

EARTHING BOSS

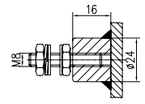

Anchor Bolt
M24*600

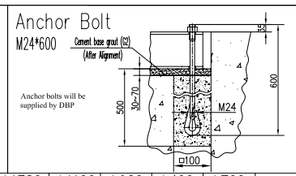

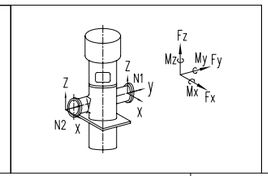

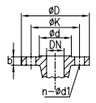

DISCHARGE	1"	±1420	±1780	±1160	±920	±460	±700
	inch	Fx	Fy	Fz	Mx	My	Mz
	DN	Force (N)			Moment(Nm)		
SUCTION	2"	±1420	±1780	±1160	±920	±460	±700
	inch	Fx	Fy	Fz	Mx	My	Mz
	DN	Force (N)			Moment(Nm)		

Nozzle Allowable Force & Moment

PUMP END

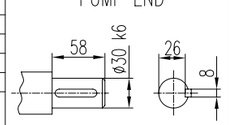

MOTOR END

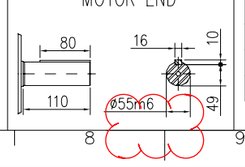

Remark:
1. Moment of inertia: 0.35 kg.m2

MINIMUM CLEARANCE FOR MAINTENACE AND DISMANTLING	(mm)
Wear Ring	0.5
Balance Drum / Balance Sleeve (Radial)	0.4
Shaft Bushing / Shaft Sleeve	0.2
Bearing / Cover	0.08~0.15

Static loading calculation results		
FXStatic=±	2840	N
FYStatic=±	3560	N
FZStatic=±	-33094/37734	N
MXStatic=±	4371	N*m
MYStatic=±	2013	N*m
MZStatic=±	2820	N*m

Dynamic loading calculation results		
FXdynamic=±	293	N
FYdynamic=±	293	N
FZdynamic=±	0	N
MXdynamic=±	132	N*m
MYdynamic=±	132	N*m
MZdynamic=±	71/-71	N*m

Gas Sweetening, Sulphur Recovery, C2 Recovery, Fractionation and Inter Connection Pipeline Between Plants Project

BUSHEHR PETROCHEMICAL COMPANY

P.O No.: A315.753AME

SCALE:

DEEP BLUE PUMP

EIED
Energy Industries Engineering & Design Co.

DRAWING TITLE:

Pump Outline Drawing for OFF-SPEC TANK FLARE KO DRUM PUMPS
05-415-P-2A/B

DRAWING No.: BU-05-VD-000-MA-DRW-4152-012

SHEET No. 1 OF 1