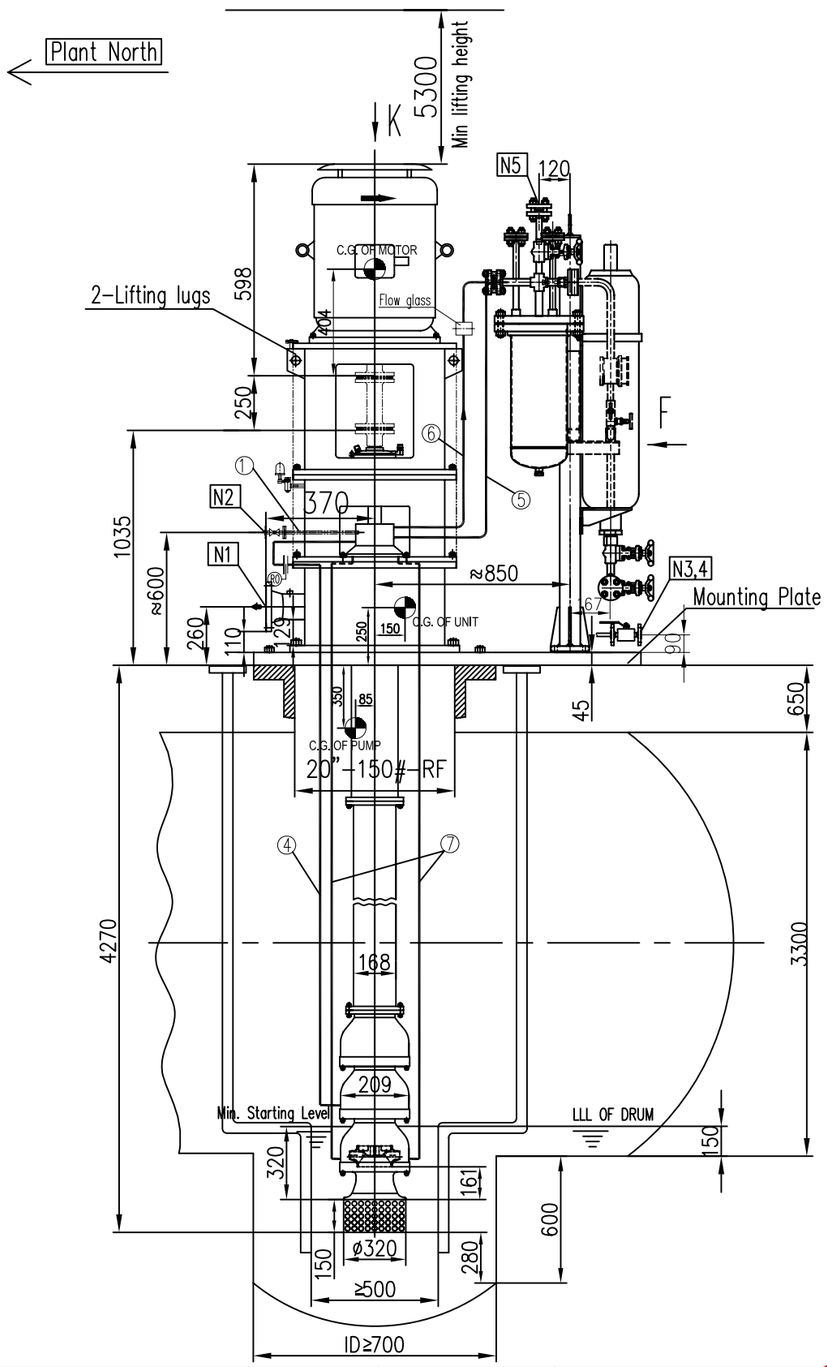

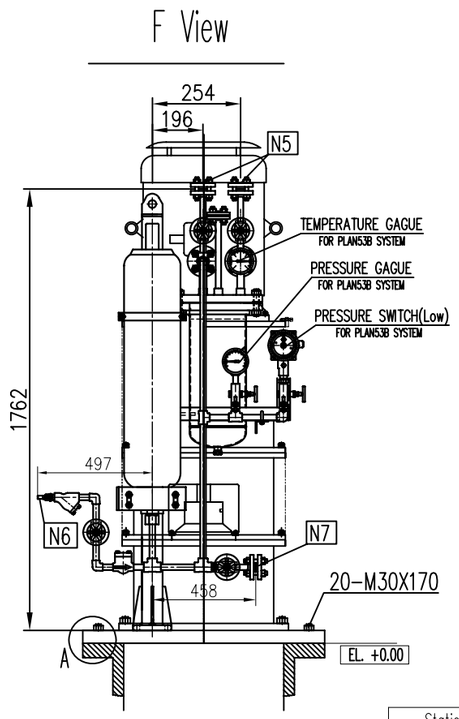

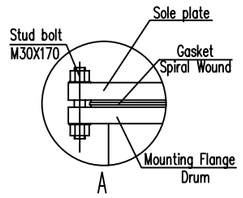

PROCESS CONNECTIONS			
Code	Description	Size & Rating	Remark
N1	Pump Discharge Flange	3", ASME B16.5 300LB RF	
N2	Pump Vent Flange	3/4", ASME B16.5 300LB RF	Flange with ball valve
N3	Cooling Water Inlet	1", ASME B16.5 150LB RF	Flange with ball valve
N4	Cooling Water Outlet	1", ASME B16.5 150LB RF	Flange with ball valve
N5	Plan 53B vent	1/2", ASME B16.5 1500LB RF	Flange with gate valve
N6	Plan 53B filling	1/2" NPT, Quick Fittings	
N7	Plan 53B drain	1/2", ASME B16.5 1500LB RF	Flange with gate valve

Pipeline Description	
①	Seal vent pipe
②	Main cooling water inlet
③	Main cooling water outlet
④	Plan14 Flushing pipeline
⑤	Plan53B Flushing pipeline (to seal chamber)
⑥	Plan53B Flushing pipeline (from seal chamber)
⑦	Balance pipeline & Plan 14 return line

WEIGHT TABLE		
PUMP	1290	KG
MOTOR	155	KG
SEAL SYSTEM	336	KG
BASEPLATE	180	KG
OTHERS	50	KG
TOTAL WEIGHT	2011	KG
ROTOR WEIGHT	162	KG
MAX. MAINTENANCE WEIGHT	310	KG

Static loading calculation results		
FXStatic=±	3560	N
FYStatic=±	4400	N
FZStatic=±	-18377/24257	N
MXStatic=±	4833	N*m
MYStatic=±	2486	N*m
MZStatic=±	2932	N*m

Dynamic loading calculation results		
FXdynamic=±	125	N
FYdynamic=±	125	N
FZdynamic=±	0	N
MXdynamic=±	177	N*m
MYdynamic=±	177	N*m
MZdynamic=±	97/-97	N*m

PUMP INFORMATION	
Item No:	01-130-P-6
Service:	TGT AMINE DRAINS PUMP
Model:	LDB 120-40X3-B-V
Seal Plan:	14+53B
Motor:	11KW-1465RPM
Motor Critical Speed:	6700RPM

REFERENCE DRAWING	DWG NO.
Seal System Drawing	BU-01-VD-307-MA-DRW-1306-072
Motor outline Drawing	BU-01-VD-307-MA-DRW-1306-104
Coupling Drawing	BU-01-VD-307-MA-DRW-1306-040
Pump Data Sheet	BU-01-VD-307-MA-DSH-1306-008

Note: 1. Pump rotation direction: CCW viewed from the drive-end.
2. Vessel item number is 01-130-V-4.
3. Vibration Level complies to API610 requirement, table 8 and table 9.
4. Bolt&nut and related gasket for mounting plate will be provided by DBP.

K View

MOUNTING PLATE: DN 500 ASME B16.5 150LB RF

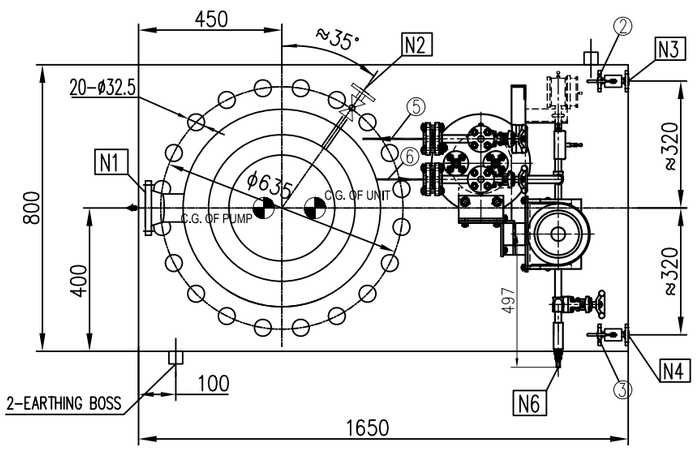

Code		
Code1	☑	(Approved) No comment and the document is released for Manufacturing
Code2	☐	(Approved with comments) Vendor shall correct, revise and resubmit the document The document is released for manufacturing
Code3	☐	(Commented) : Vendor shall correct / revise & resubmit document
Code4	☐	Not Acceptable quality (Reject)

The above checking result by EIED shall in no way relieve Vendor of any liability, obligation and responsibility out of the purchase order and the mutual agreement in writing

EIED BUSHEHR PROJECT

DATE: 4 November 2015
DEPT: MA
Signa: M.F.
CODE 1

REV.	DATE	PURPOSE OF ISSUE	PREP. BY	CHKD. BY	APPD. BY	AUTH. BY
02	29/08/15	FOR APPROVAL	Eric	Andy	Tino	AAP
01	08/07/15	FOR APPROVAL	Eric	Andy	Tino	AAP
00	25/03/15	FOR APPROVAL	Eric	Andy	Tino	AAP

Gas Sweetening, Sulphur Recovery, C2 Recovery, Fractionation and Inter Connection Pipeline Between Plants Project

BUSHEHR PETROCHEMICAL COMPANY

P.O No.: A315.760AME

SCALE:

DEEP BLUE PUMP

EIED Energy Industries Engineering & Design Co.

DRAWING TITLE:
Pump Outline Drawing forTGT AMINE DRAINS PUMP
01-130-P-6

DRAWING No.: BU-01-VD-307-MA-DRW-1306-008 SHEET No. 1 OF 1

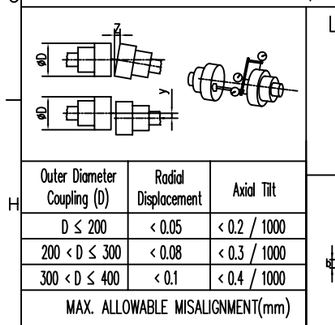

Outer Diameter Coupling (D)	Radial Displacement	Axial Tilt
D ≤ 200	< 0.05	< 0.2 / 1000
200 < D ≤ 300	< 0.08	< 0.3 / 1000
300 < D ≤ 400	< 0.1	< 0.4 / 1000
MAX. ALLOWABLE MISALIGNMENT(mm)		

Nozzle Allowable Force & Moment			
Discharge (3")	Fx	Fy	Fz
	±2140	±2660	±1780
	Force (N)		
	Mx	My	M
	±1900	±940	±1440
	Moment(Nm)		

Minimum Clearance for impeller & casingwear ring	0.4~0.45 mm		
Pump shaft information			
Name	Upper Shaft	Middle Shaft	Lower Shaft
Length(mm)	1575	1540/900	1022
Quantigy	1	2	1

Remark:
1. Moment of inertia: 0.11 kg.m2