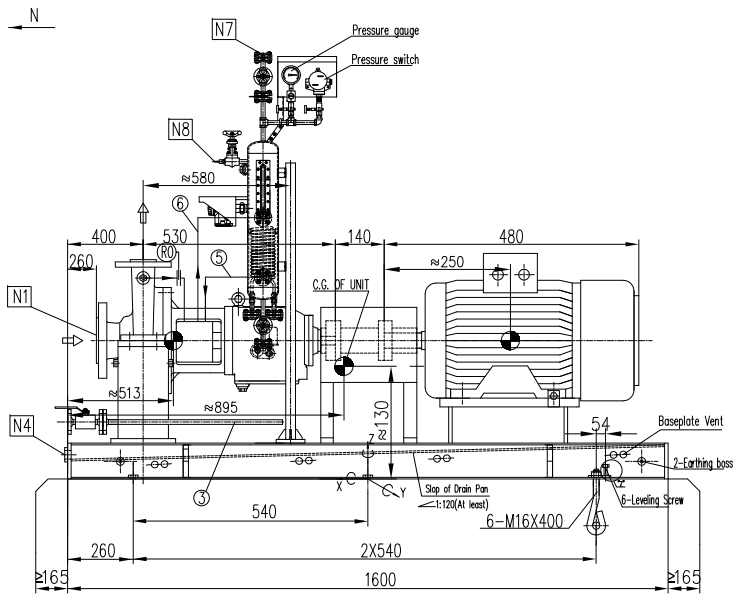

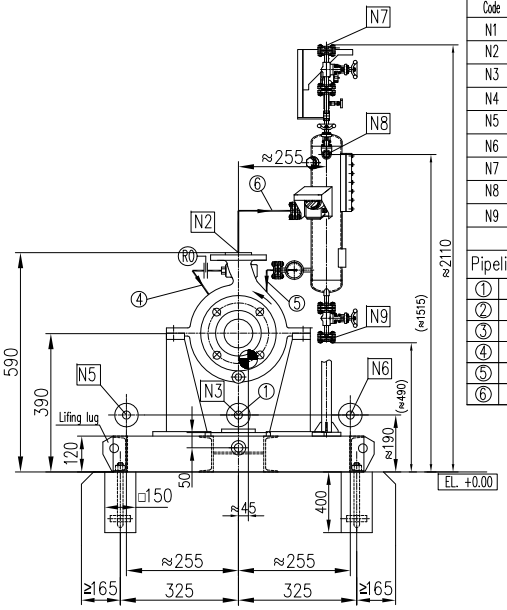

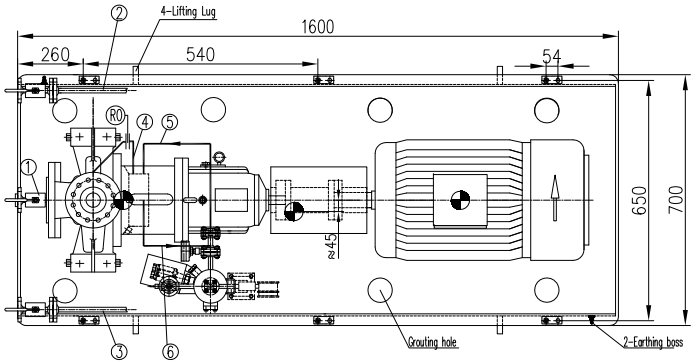

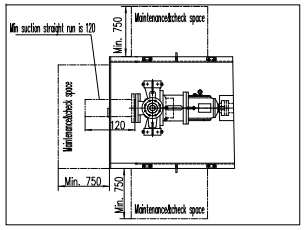

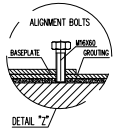

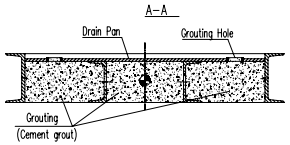

PROCESS CONNECTIONS			
Code	Description	Size & Rating	Remark
N1	Pump Suction Flange	1 1/2", ASME B16.5 300LB RF	
N2	Pump Discharge Flange	1", ASME B16.5 300LB RF	
N3	Pump Drain Flange	3/4", ASME B16.5 300LB RF	Flange with ball valve
N4	Baseplate Drain	NPT 2"	
N5	Cooling Water Inlet Flange	1", ASME B16.5 150LB RF	Flange with ball valve
N6	Cooling Water Outlet Flange	1", ASME B16.5 150LB RF	Flange with ball valve
N7	Plan52 Vent	1/2", ASME B16.5 600LB RF	Flange with gate valve
N8	Plan52 Filling	1/2" Quick Fittings	
N9	Plan52 Drain	1/2", ASME B16.5 600LB RF	Flange with gate valve

Pipeline Description	
①	Pump Drain
②	Main cooling water inlet
③	Main cooling water outlet
④	Plan11 Flushing pipeline
⑤	Plan52 Flushing pipeline (to seal chamber)
⑥	Plan52 Flushing pipeline (from seal chamber)

PUMP INFORMATION	
Item No:	05-330-P-2
Service:	Propane Transfer Pump
Model:	EAP 25K1-200
Seal Plan:	11+52
Motor:	4KW-2890RPM

REFERENCE DRAWING	DWG NO.
Seal System Drawing	BU-05-VD-307-MA-DRW-3302-126
Motor outline Drawing	BU-05-VD-307-EL-DRW-3302-130
Coupling Drawing	BU-05-VD-307-MA-DRW-3302-124
Pump data sheet	BU-05-VD-307-MA-DSH-3302-061

Note:
1. The pump is self vent.
2. Rotation: Clockwise viewed from drive-end.
3. Vibration Level complies to API610 requirement, table 8 and table 9.

Code 1
2017.1.23

	o comment and the document is Manufacturing
	n comments) Vendor shall and resubmit the document is released for manufacturing
	: Vendor shall correct / revise & ment
	e quality (Reject)
	by EIED shall in no way relieve gation and responsibility out of the ual agreement in writing
EIED BUSHEHR PROJECT	DATE : DEPT: Signature :

Static loading calculation results		
FXStatic=±	3200	N
FYStatic=±	2580	N
FZStatic=±	−1445/7325	N
MXStatic=±	3078	N*m
MYStatic=±	4054/3527	N*m
MZStatic=±	2631	N*m

Dynamic loading calculation results		
FXdynamic=±	0	N
FYdynamic=±	16	N
FZdynamic=±	16	N
MXdynamic=±	19/−7	N*m
MYdynamic=±	6	N*m
MZdynamic=±	6	N*m

WEIGHT TABLE		
PUMP	132	KG
MOTOR	54	KG
SEAL SYSTEM	70	KG
BASEPLATE	245	KG
OTHERS	50	KG
TOTAL WEIGHT	551	KG
ROTOR WEIGHT	10.1	KG
MAX. MAINTENANCE WEIGHT	50.7	KG

01	04/01/17	FOR APPROVAL	Will	Andy	Tino	AAP
00	05/09/15	FOR APPROVAL	Will	Andy	Tino	AAP
REV.	DATE	PURPOSE OF ISSUE	PREP. BY	CHKD. BY	APPD. BY	AUTH. BY

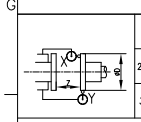

D≤200	X	≤0.05
	Y	≤0.05
	Z	Z±0.1
200 < D≤300	X	≤0.08
	Y	≤0.08
	Z	Z±0.15
300 < D≤400	X	≤0.10
	Y	≤0.10
	Z	Z±0.2

MAX. ALLOWABLE MISALIGNMENT(mm)

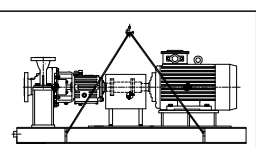

Anchor Bolt
M16x400
Anchor bolts will be supplied by DBP

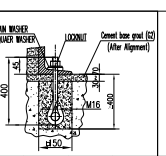

EARTHING BOSS

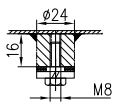

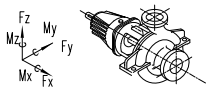

DISCHARGE	1"	±1420	±1160	±1780	±920	±460	±700
	inch	Fx	Fy	Fz	Mx	My	Mz
	DN	Force (N)			Moment(Nm)		
SUCTION	1 1/2"	±1780	±1420	±1160	±920	±460	±700
	inch	Fx	Fy	Fz	Mx	My	Mz
	DN	Force (N)			Moment(Nm)		

Nozzle Allowable Force & Moment

PUMP END

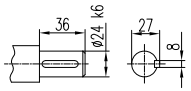

MOTOR END

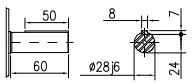

Gas Sweetening, Sulphur Recovery, C2 Recovery, Fractionation and Inter Connection Pipeline Between Plants Project

BUSHEHR PETROCHEMICAL COMPANY

P.O No.: AI316.3612ME

SCALE:

DEEP BLUE PUMP

EIED Energy Industries Engineering & Design Co.

DRAWING TITLE:

Pump Outline Drawing for Propane Transfer Pump
05-330-P-2

DRAWING No.: BU-05-VD-303-MA-DRW-3302-120 SHEET No. 1 OF 1