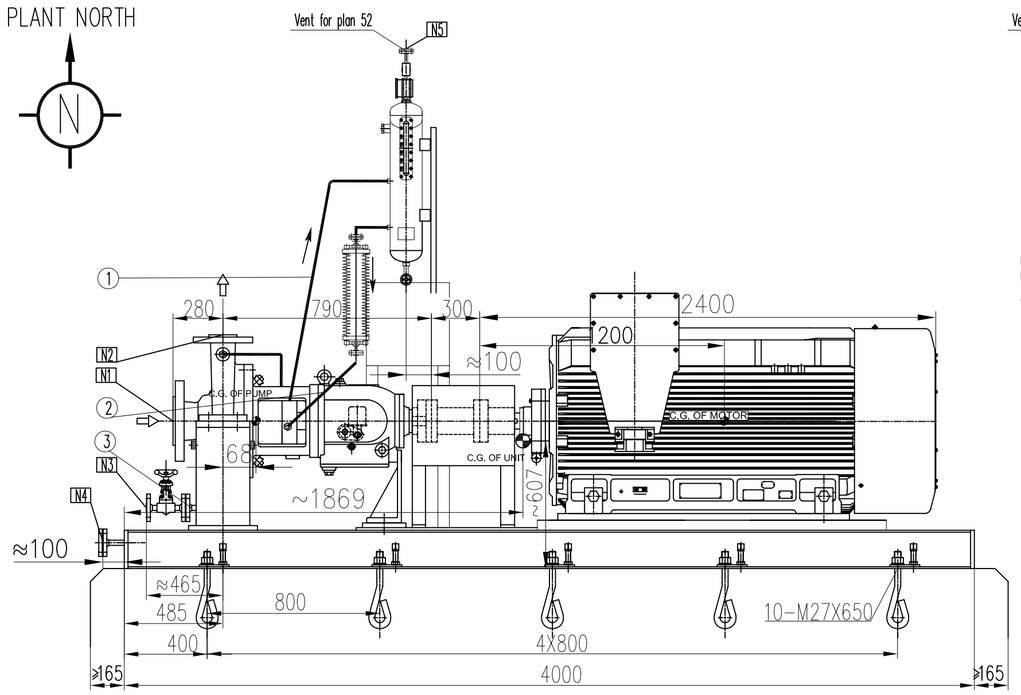

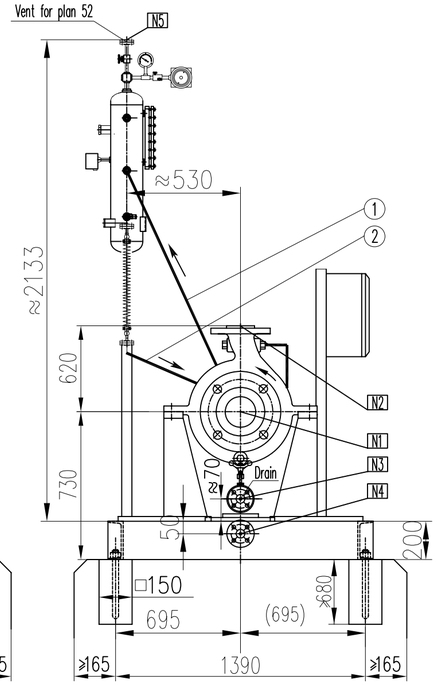

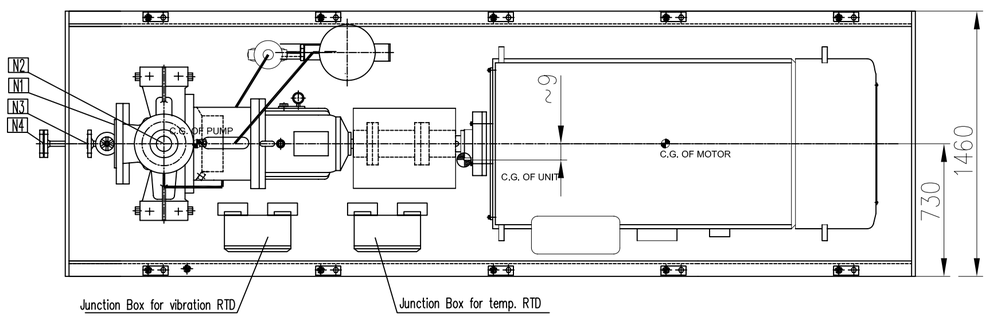

PROCESS CONNECTIONS			
Code	Size & Rating	Description	Remark
N1	8"-ANSI 300Lb-RF	Pump Suction	
N2	8"-ANSI 300Lb-RF	Pump Discharge	
N3	3/4"-ANSI 300Lb-RF	Pump Drain	Flange With valve
N4	1"-ANSI 150lb-RF	Baseplate Drain	Flange With valve
N5	3/4"-ANSI 300Lb-RF	Seal System Vent to flare	Flange With valve

Pipeline Instruction	
1	Pipe for barrier fluid from seal
2	Pipe for barrier fluid to seal
3	Pump Drain

Note:
1. Pump is self-vent.
2. Plan 52 seal system vent to be connected to LP flare with back pressure of 0.3 barg.

REFERENCE DOCUMENTS	
DOCUMENT NO.	TITLE
VD-AOGC-DR-GEN-5001-0046	Mechanical seal system drawing for STABILIZATION COLUMN SIDE SEPARATOR CIRCULATION PUMPS

Code1	☐	(Approved) Vendor to submit "For Final (No comment & release for manufacturing)
Code2	☐	(Approved with comments) Vendor shall correct / revise & submit it as "For Final" (Released for manufacturing if change incorporated as indicated)
Code3	☐	(Commented) : Vendor shall correct / revise & resubmit . It as " For Approval" of the date specified : (Corrected documents to be
Code4	☐	Not Acceptable quality (Reject)

The above checking result by EIED shall in no way relieve Vendor of any liability, obligation and responsibility out of the purchase order and the mutual agreement in writing

EIED
WEST KAROON PROJECT

DATE :
DEPT:
Signature :

Only for internal review

CV	PI	EL	IN	ME	MA
CS	CA	PR	SA	HV	TL

Anchor Bolt
Manufacture: Deep Blue Pump Co.
Size: M27X650
Material: A193 B7

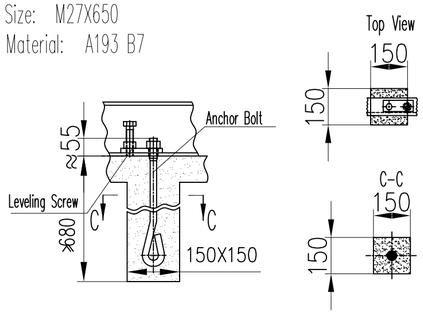

Rotary Parts:

Pump rotary parts:
Mass: 168 kg, Speed: 1450 rpm

Motor rotary parts:
Mass: 475 kg, Speed: 1450 rpm

Maximum Allowable Amplitude For Foundation:
Velocity Peak-Peak: 4 mm/s
Displacement Peak-Peak: 50.8 μm

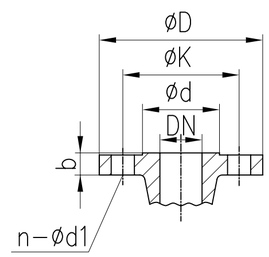

992	1450	3410	90	5942	596
Pump	Baseplate	Motor	Seal System	All	Maintenance weight

Weight(kg)

Drain	ANSI B16.5 300lb RF	3/4"	117.3	15.7	82.5	42.9	4-ø18
Discharge	ANSI B16.5 300lb RF	8"	381	41.1	330.2	270	12-ø26
Suction	ANSI B16.5 300lb RF	8"	381	41.1	330.2	270	12-ø26
Name	Standard	DN	øD	b	øK	ød	n-ød1

Flange Size

Consumer: NIOC	Capa.: 460.6 m³/h	DRIVER	
Designer:	Head: 130.6 m	Motor Type: EXD IIB T4	
Project: WEST KAROON OIL FIELDS EARLY PRODUCTION UNIT Arvandan Refinery Plant	Temp.: 10/87/130 °C	VOLTS/PHASE/HERTZ: 6000V/3PH/50HZ	
Plant:	Speed: 1486 r/min		
Item No.: 0210-PA-004/5/6 A/B (Train 1/2/3)	Power: 280 kW	MECH.SEAL	
Service: STABILIZATION COLUMN SIDE SEPARATOR CIRCULATION PUMPS	Motor Type: YB2 355	API flushing plan: 11+52+61(Air fin cooler)	
Project Information	Base Information		

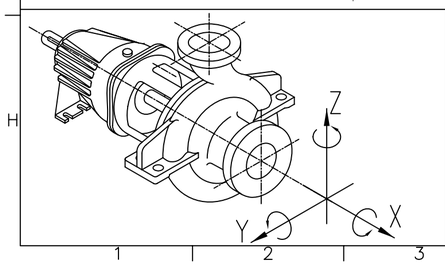

DISCHARGE	8"	±7560	±6220	±9780	±7060	±3520	±5160
		Fx	Fy	Fz	Mx	My	Mz
	DN	Force (N)			Moment(Nm)		
SUCTION	8"	±9780	±7560	±6220	±7060	±3520	±5160
		Fx	Fy	Fz	Mx	My	Mz
	DN	Force (N)			Moment(Nm)		

Nozzle Allowable Force & Moment

DEEP BLUE PUMP CO. APIFLO-P 200K5-630 General Arrangement

REV.	DATE	DESCRIPTION	ORIG. BY	PREP. BY	CHKD. BY	APPD. BY	AUTH. BY
04	19-Feb-2013	FOR APPROVAL		Will	Andy	Ryan	
03	29-Dec-2012	FOR APPROVAL		Will	Andy	Ryan	
02	06-Nov-2012	FOR APPROVAL		Will	Andy	Ryan	
01	11-Oct-2012	FOR APPROVAL		Will	Andy	Ryan	

West Karoon Oil Fields
Early Production Units
(Arvandan)

AOGC
ARVANDAN OIL AND GAS COMPANY

P.O. No.: STAGE: SCALE:

DEEP BLUE PUMP CO. | MAYSUN Engineering & Construction Company | EIED | Energy Development Pioneer Co.

DRAWING TITLE:
General drawing for STABILIZATION COLUMN SIDE SEPARATOR CIRCULATION PUMPS
(0210-PA-004/5/6 A/B(Train 1/2/3))

DRAWING No.: VD-AOGC-GA-GEN-5001-0004 SHEET No. 1 OF 1 REV. 04