COOLING WATER SUPPLIED	
Item	142-P-101 A/B
Pressure (barg)	10.94

COOLING WATER FOR PUMP UNIT					
Cooling	Consumption		Return Pressure	Temp. Inlet/Outlet	
Seal system	0.9	m3/h	> 5	barg	30 / 40 ℃
Lube oil	0.8	m3/h	> 5	barg	30 / 40 ℃

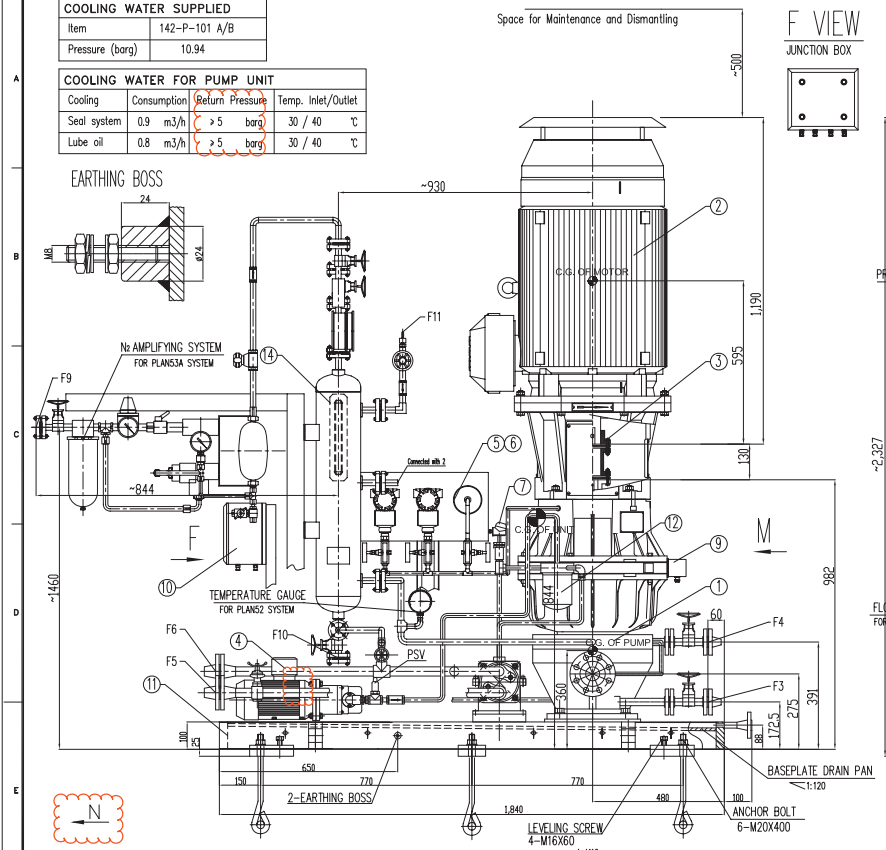

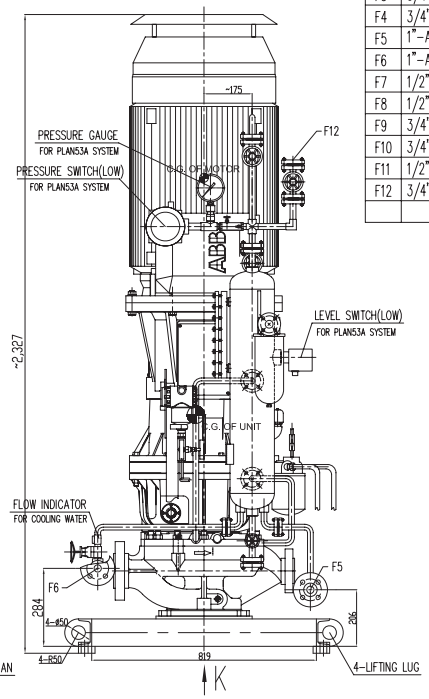

PROCESS CONNECTIONS			
Code	Size & Rating	Description	Remark
F1	3"-ANSI 600Lb-RF	Suction	
F2	2"-ANSI 600Lb-RF	Discharge	
F3	3/4"-ANSI 600Lb-RF	Casing Drain	Flange With valve
F4	3/4"-ANSI 600Lb-RF	Casing Vent	Flange With valve
F5	1"-ANSI 150Lb-RF	Cooling Water Inlet	Flange With valve
F6	1"-ANSI 150Lb-RF	Cooling Water Outlet	Flange With valve
F7	1/2"-ANSI 150Lb-RF	Skid Drain	
F8	1/2"-ANSI 150Lb-RF	Oil Sump Drain	Blind flange with valve
F9	3/4"-ANSI 300Lb-RF	N_2 Connection	Flange With valve
F10	3/4"-ANSI 300Lb-RF	Plan53A Drain	Flange With valve
F11	1/2" Quick Fittings	Plan53A Filling	Quick Connection
F12	3/4"-ANSI 300Lb-RF	Plan53A Vent	Flange With valve

Maximum Allowable Amplitude for Foundation:			
Velocity (PEAK)	:	4	mm/s
Displacement	:	4.5	μm
WEIGHT OF HIGH SPEED ROTOR	:	7.2	KG
SPEED OF HIGH SPEED ROTOR	:	8527	RPM
WEIGHT OF MOTOR ROTOR	:	132	KG
SPEED OF MOTOR ROTOR	:	2976	RPM

M VIEW

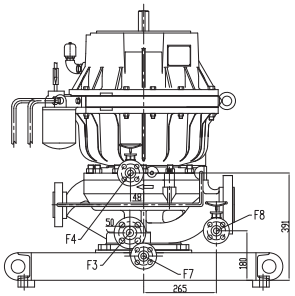

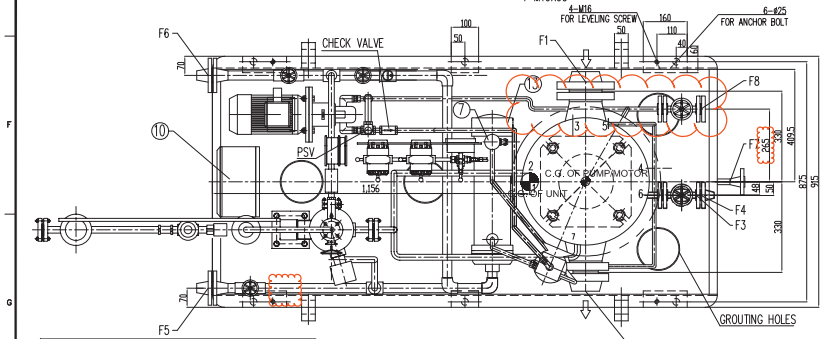

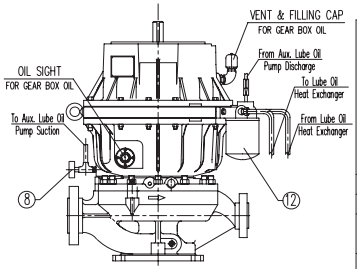

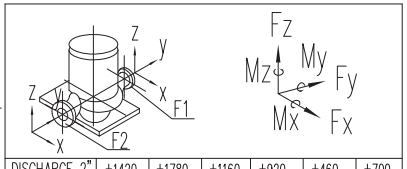

DISCHARGE 2"	±1420	±1780	±1160	±920	±460	±700
SUCTION 3"	±2140	±2660	±1780	±1900	±940	±1440
FLANGE	Fx	Fy	Fz	Mx	My	Mz
	Force (N)			Moment (N*m)		

Nozzle Allowable Force & Moment

* The values in above table are twice time as given in the Table 4 of API 610, 10th edition.

GENERAL NOTES

PUMP INFORMATION	
Item No.:	142-P-101
Unit:	142
Service:	HC LIQUID BURNER FEED PUMP
Model:	EGS-L1-30/341
Seal Plan:	11+53A
Motor:	90KW - 2P

1. The location of Junction Box 'A' will be finalized after pipe line work finished.
2. The main electric motor is CW viewing from the coupling end.
3. Cables and Cable Connections:

	Cable Gland Thread	Cable Cores (mm^2)
Main Motor	2 x M63	3 x 240
Main Motor Space Heater	M20	3 x 4
Aux. Motor (Lube Oil)	1 x M25	3 x 4
Aux. Motor (Oil Cooler)	NA	NA

REFERENCE DRAWINGS	DWG NO.
MECH. SEAL SYSTEM DRAWING	VP-SP2021-ON-MA-142-P101-0149
MOTOR OUTLINE DRAWING	VP-SP2021-ON-MA-142-P101-0190
COUPLING DRAWING	VP-SP2021-ON-MA-142-P101-0069
JUNCTION BOX DRAWING	VP-SP2021-ON-MA-142-P101-0208
PUMP P&ID DRAWING	VP-SP2021-ON-MA-142-P101-0042

Code1	■	(Approved) Vendor to submit "For Final (No comment & release for manufacturing)
Code2	□	(Approved with comments) Vendor shall correct / revise & submit it as "For Final" (Released for manufacturing if change incorporated as indicated)
Code3	□	(Commented) : Vendor shall correct / revise & resubmit . It as " For Approval" of the date specified : (Corrected documents to be
Code4	□	Not Acceptable quality (Reject)

The above checking result by OIEC shall in no way relieve Vendor of any liability, obligation and responsibility out of the purchase order and the mutual agreement in writing

OIEC-SP 20&21

DATE : 13.07.2013
DEPT: Machinery
Signature : M.S

Only for internal review

CV	PI	EL	IN	ME	MA
ST	BU	PR	SA	HV	TL

WEIGHT TABLE			
FLUID END	:	220	KG
GEAR BOX	:	120	KG
MOTOR SUPPORT	:	60	KG
MOTOR	:	665	KG
SEAL SYSTEM	:	60	KG
COMMON BASEPLATE	:	400	KG
AUX. LUBE OIL PUMP	:	80	KG
OTHERS	:	80	KG
TOTAL WEIGHT	:	1660	KG

SEAL HOUSING PORT IDENTIFICATION	
1	Seal Drain,Gearbox Oil(ALWAYS OPEN)
2	Seal Drain(Single Seal)
	Buffer Out(Double/Tandem Seal)
3	Cooling In(Normally Plugged)
4	Cooling Out(Normally Plugged)
5	Seal Flush
6	Seal Flush
7	Seal Drain(Single Seal)
	Buffer In(Double/Tandem Seal)

ANCHOR BOLT DETAIL
M20x400(Supplied by DBP)

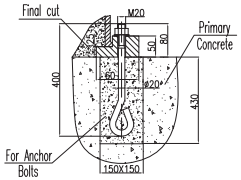

K VIEW
PUMP MOUNTING DETAIL

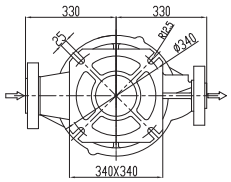

CODE	NAME	DESCRIPTION
(14)	Plan53A System	John Crane Maker. Including N_2 Ampifying System.
(13)	Lube Oil Heat Exchanger	Water Cooler Type
(12)	Oil Filter	TOYOTA Maker
(11)	Common Baseplate	Baseplate No. According to Annex D of API610 The 10th: 3μ.
(10)	Juction Box(A)	For Analog Signals
(9)	Vibration Switch	For Gear Box
(8)	Temperature Gauge	For Lube Oil
(7)	Temperature Transmitter	For Lube Oil
(6)	Pressure Transmitter	For Lube Oil
(5)	Pressure Gauge	For Lube Oil
(4)	Aux. Lube Oil Pump & Motor	Motor Maker: ABB, 0.75KW, 1415RPM, 400V/3PH/50HZ, IP55, ExdIICT4
(3)	Coupling (Metastream Maker)	Coupling Guard Material: AL.
(2)	Main Motor	ABB Maker, Frame: 280, 90KW, 2976RPM, 400V / 3PH / 50HZ, IP55, ExnAIIT3
(1)	High Speed Pump	Supplied By Deep Blue Pump Co.

MAIN EQUIPMENT LIST

REV.	DATE	DESCRIPTION	ORIG.	PREP.	CH'D.	APP'D.	Contractor APP'D
5	1. Jul. 2013	FOR APPROVAL	DBP	Tino	Ryan		
4	21. May. 2013	FOR APPROVAL	DBP	Tino	Ryan		

SOUTH PARS GAS FIELD DEVELOPMENT-
PHASES 20 & 21, ASSALUYEH-IRAN
ONSHORE FACILITIES

NIOC
PARS OIL AND GAS COMPANY

PROJECT No.: POGC-572-88-35 | DOC.CLASS: | SCALE :

DEEP BLUE PUMP CO.

OIEC

142-P-101
HC LIQUID BURNER FEED PUMP
GENERAL ARRANGEMENT DRAWING

DRAWING No. VP-SP2021-ON-MA-142-P101-0014 | SHEET No. 1 OF 1 | REV. 5