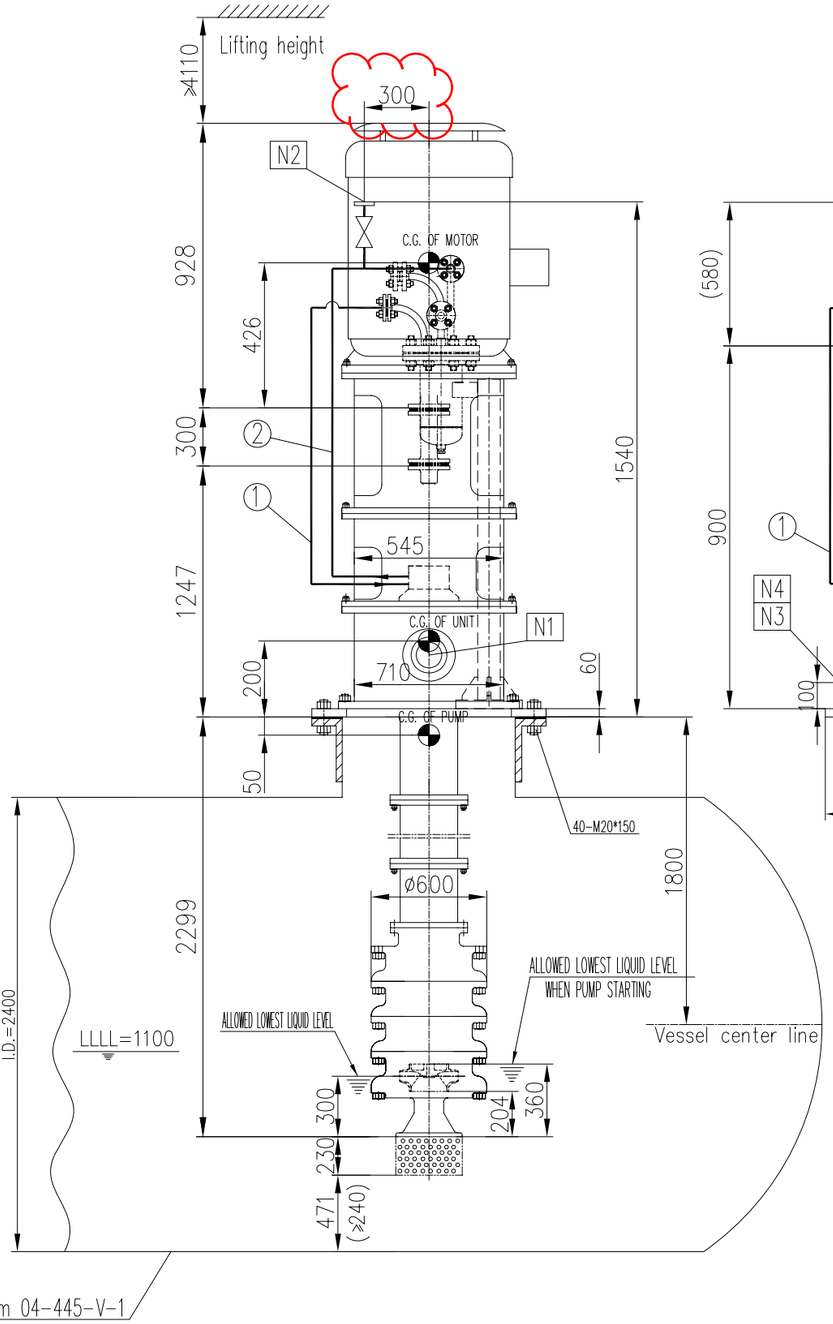

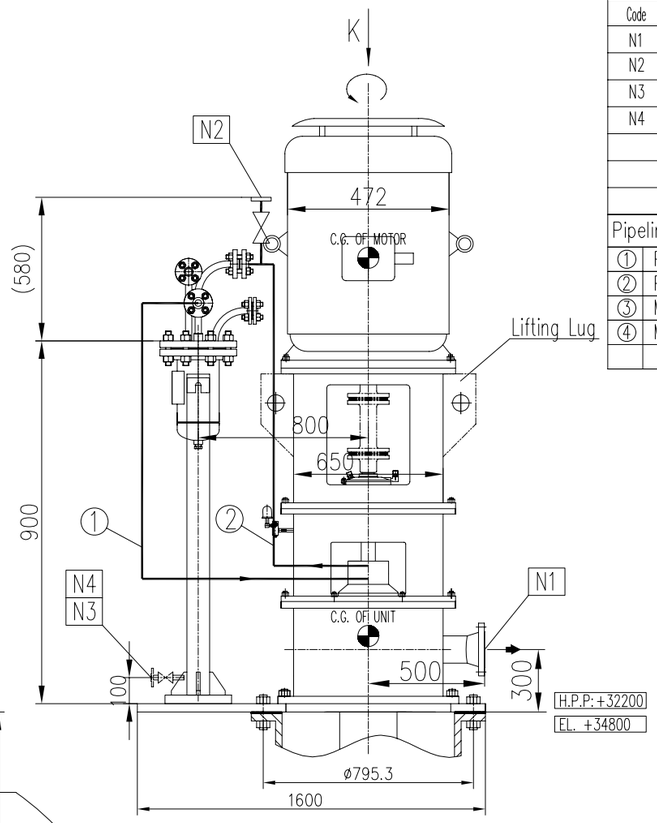

K View

Mounting plate 28", ASME B16.47, series B, 150LB
(with square mounting plate)

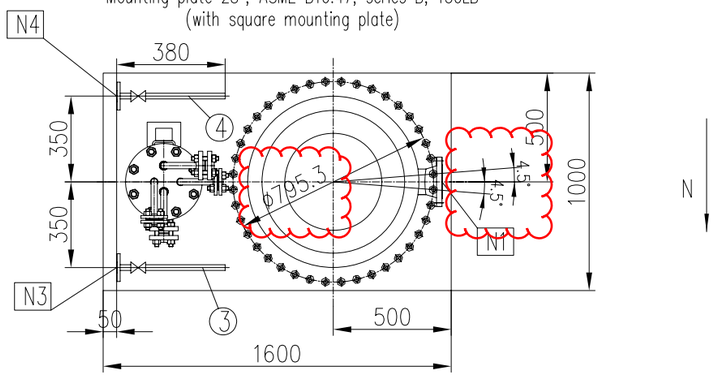

PROCESS CONNECTIONS			
Code	Description	Size & Rating	Remark
N1	Pump Discharge Flange	4", ASME B16.5 300LB RF	
N2	Plan23 Vent	3/4", ASME B16.5 300LB RF	Flange with ball valve
N3	Cooling Water Inlet Flange	1", ASME B16.5 150LB RF	Flange with ball valve
N4	Cooling Water Outlet Flange	1", ASME B16.5 150LB RF	Flange with ball valve

Pipeline Description	
①	Plan23 Flushing pipeline (to seal chamber)
②	Plan23 Flushing pipeline (from seal chamber)
③	Main cooling water inlet
④	Main cooling water outlet

WEIGHT TABLE		
PUMP	1855	KG
MOTOR	411	KG
SEAL SYSTEM	28	KG
BASEPLATE	750	KG
OTHERS	50	KG
TOTAL WEIGHT	3094	KG
ROTOR WEIGHT	180	KG
MAX. MAINTENANCE WEIGHT	498	KG

PUMP INFORMATION	
Item No:	05-445-P-1A/B
Service:	STEAM CONDENSATE PUMPS
Model:	LDB 200-80X4-A-V
Seal Plan:	23+61
Motor:	30KW-1480RPM

REFERENCE DRAWING	DWG NO.
Seal System Drawing	BU-05-VD-303-MA-DRW-4451-057
Motor outline Drawing	BU-05-VD-303-EL-DRW-4451-090
Coupling Drawing	BU-05-VD-303-MA-DRW-4451-034
Pump Data Sheet	BU-05-VD-303-MA-DSH-4451-010

Note:
1. Rotation: Counterclockwise viewed from drive-end.
2. Vibration Level complies to API610 requirement, table 8 and table 9.

Code1	☐	(Approved) No comment and the document is released for Manufacturing
Code2	☐	(Approved with comments) Vendor shall correct, revise and resubmit the document The document is released for manufacturing
Code3	☐	(Commented) : Vendor shall correct / revise & resubmit document
Code4	☐	Not Acceptable quality (Reject)

The above checking result by EIED shall in no way relieve Vendor of any liability, obligation and responsibility out of the purchase order and the mutual agreement in writing

EIED
BUSHEHR PROJECT

DATE :
DEPT:
Signature :

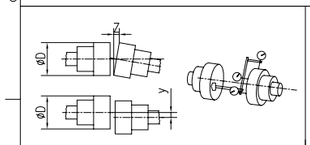

Outer Diameter Coupling (D)	Radial Displacement	Axial Tilt
D ≤ 200	< 0.05	< 0.2 / 1000
200 < D ≤ 300	< 0.08	< 0.3 / 1000
300 < D ≤ 400	< 0.1	< 0.4 / 1000
MAX. ALLOWABLE MISALIGNMENT(mm)		

LIFTING

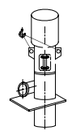

PUMP END

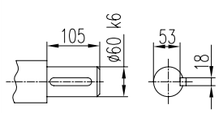

MOTOR END

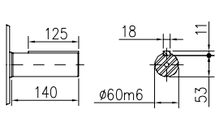

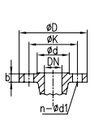

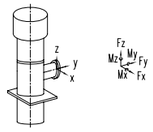

Nozzle Allowable Force & Moment			
	Fx	Fy	Fz
Discharge (Size: 4")	±2840	±3560	±2320
	Force (N)		
	Mx	My	M
	±2660	±1360	±2000
	Moment(Nm)		

EARTHING BOSS

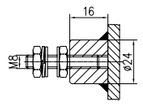

Remark:
1. Moment of inertia: 0.48 kg.m2

MINIMUM CLEARANCE FOR MAINTENACE AND DISMANTLING	(mm)
Wear Ring	0.5
Balance Drum / Balance Sleeve (Radial)	0.4
Shaft Bushing / Shaft Sleeve	0.2
Bearing / Cover	0.08~0.15

Static loading calculation results		
FXStatic=±	2840	N
FYStatic=±	3560	N
FZStatic=±	-21930/26570	N
MXStatic=±	3728	N*m
MYStatic=±	2212	N*m
MZStatic=±	2000	N*m

Dynamic loading calculation results		
FXdynamic=±	139	N
FYdynamic=±	139	N
FZdynamic=±	0	N
MXdynamic=±	118	N*m
MYdynamic=±	118	N*m
MZdynamic=±	194/-194	N*m

REV.	DATE	PURPOSE OF ISSUE	PREP. BY	CHKD. BY	APPD. BY	AUTH. BY
04	30/09/15	FOR APPROVAL	Will	Andy	Tino	AAP
03	26/08/15	FOR APPROVAL	Will	Andy	Tino	AAP
02	20/07/15	FOR APPROVAL	Will	Andy	Tino	AAP
01	12/06/15	FOR APPROVAL	Will	Andy	Tino	AAP
00	15/02/15	FOR APPROVAL	Will	Andy	Tino	AAP

Gas Sweetening, Sulphur Recovery, C2 Recovery, Fractionation and Inter Connection Pipeline Between Plants Project

BUSHEHR PETROCHEMICAL COMPANY

P.O No.: A315.753AME

SCALE:

DEEP BLUE PUMP

EIED
Energy Industries Engineering & Design Co.

DRAWING TITLE:
Pump Outline Drawing for STEAM CONDENSATE PUMPS
05-445-P-1A/B

DRAWING No.: BU-05-VD-000-MA-DRW-4451-010

SHEET No. 1 OF 1