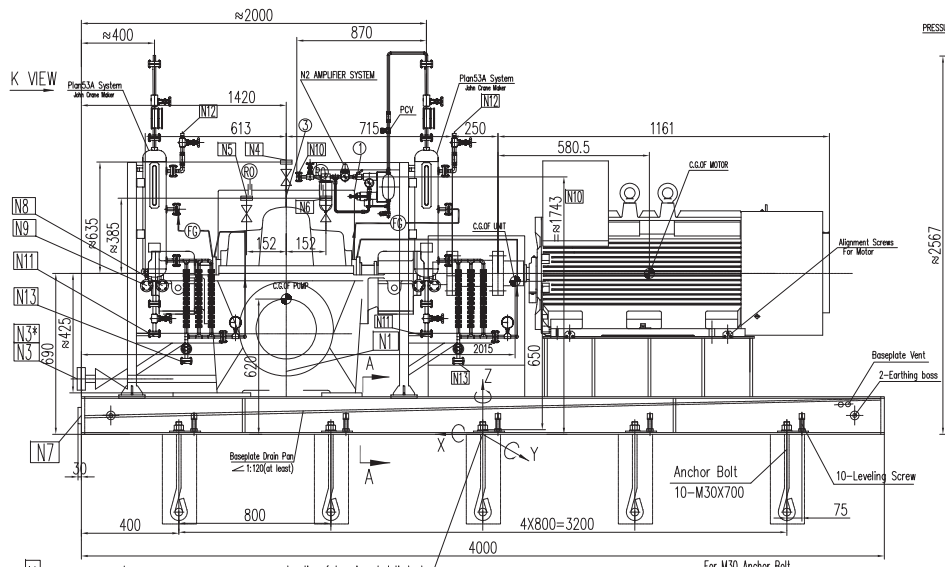

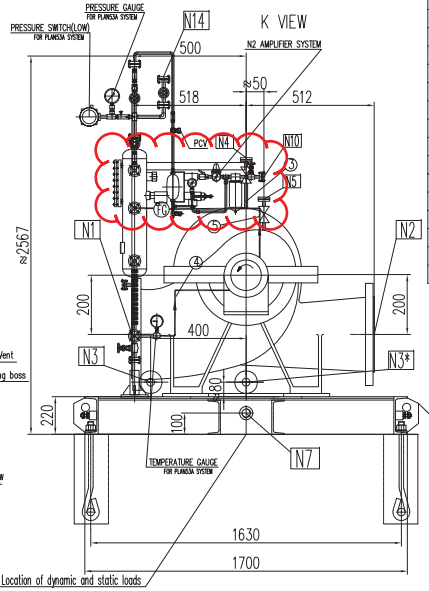

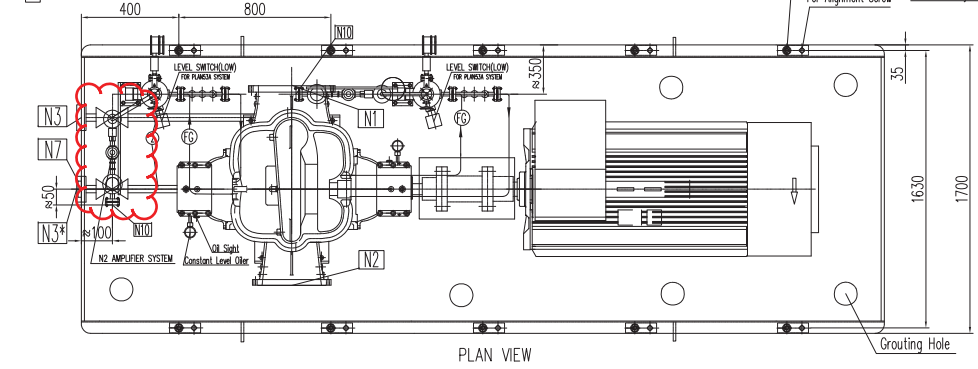

PLAN VIEW

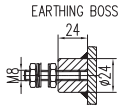

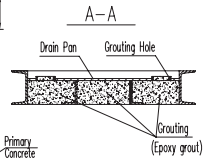

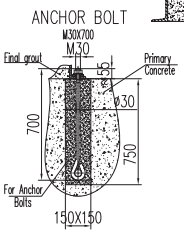

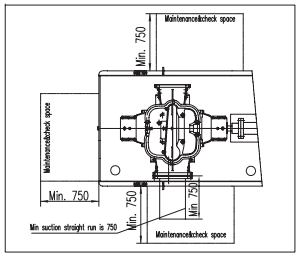

PROCESS CONNECTIONS			
Code	Size & Rating	Description	Remark
N1	10"–ANSI 300lb–RF	Pump Suction	
N2	6"–ANSI 300lb–RF	Pump Discharge	
N3	3/4"–ANSI 300lb–RF	Pump Drain(Suction)	Flange With valve & blind flange
N3*	3/4"–ANSI 300lb–RF	Pump Drain(Discharge)	Flange With valve & blind flange
N4	3/4"–ANSI 300lb–RF	Pump Vent	Flange With valve & blind flange
N5	3/4"–ANSI 300lb–RF	Pump Vent	Flange With valve & blind flange
N6	3/4"–ANSI 300lb–RF	Pump Vent	Flange With valve & blind flange
N7	G2"	Baseplate Drain	
N8	3/4"–ANSI 150Lb–RF	Cooling Water Inlet of Plan53A	Blind Flange
N9	3/4"–ANSI 150Lb–RF	Cooling Water Outlet of Plan53A	Blind Flange
N10	3/4"–ANSI 600Lb–RF	No Connection	Flange With valve
N11	3/4"–ANSI 600lb–RF	Plan53A Drain	Flange With valve & blind flange
N12	1/2" Quick Fittings	Plan53A Filling	Quick Connection
N13	3/4"–ANSI 600lb–RF	Plan53A Cooler Drain	Flange With valve & blind flange
N14	3/4"–ANSI 600lb–RF	Plan53A Vent	Flange With valve & blind flange

Pipeline Description	
①	Plan11 Flushing Pipeline
②	Pump Drain
③	Pump Vent
④	Plan53A Flushing Pipeline (to seal chamber)
⑤	Plan53A Flushing Pipeline (from seal chamber)

WEIGHT TABLE			
PUMP	:	935	KG
MOTOR	:	960	KG
SEAL SYSTEM	:	80	KG
BASE PLATE	:	1970	KG
ROTOR	:	85	KG
OTHERS	:	30	KG
TOTAL WEIGHT	:	3975	KG

Maximum Allowable Amplitude For Foundation			
Velocity(PEAK)	:	4	mm/s
Displacement	:	50.8	μm

GENERAL NOTES

PUMP INFORMATION	
Item No.:	103-P-103A/B, 203 A/B
Unit:	103
Service:	STABILISED CONDENSATE EXPORT PUMPS
Model:	SPLITFLO-EDS 150-500G-A
Seal Plan:	11+53A+61
Motor:	132KW – 1480RPM

NOTE: 1. Valve for pump drain and vent are ball valve.

REFERENCE DRAWINGS	DWG NO.
MOTOR OUTLINE DRAWING	VP-SP2021-ON-MA-103-P103-0014
COUPLING DRAWING	VP-SP2021-ON-MA-103-P103-0008
SEAL SYSTEM DRAWING	VP-SP2021-ON-MA-103-P103-0018

Code1	■	(Approved) Vendor to submit "For Final (No comment & release for manufacturing)
Code2	□	(Approved with comments) Vendor shall correct / revise & submit it as "For Final" (Released for manufacturing if change incorporated as indicated)
Code3	□	(Commented) : Vendor shall correct / revise & resubmit . It as " For Approval" of the date specified : (Corrected documents to be
Code4	□	Not Acceptable quality (Reject)

The above checking result by OIEC shall in no way relieve Vendor of any liability, obligation and responsibility out of the purchase order and the mutual agreement in writing

OIEC–SP 20&21

DATE : 15/12/2014
DEPT: Machinery
Signature : Salem

Only for internal review

CV	PI	EL	IN	ME	MA
ST	BU	PR	SA	HV	TL

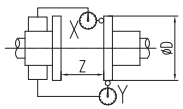

D≤200	X	≤0.05
	Y	≤0.05
	Z	Z±0.1
200<D≤300	X	≤0.08
	Y	≤0.08
	Z	Z±0.15
300<D≤400	X	≤0.10
	Y	≤0.10
	Z	Z±0.2

MAX. ALLOWABLE MISALIGNMENT(mm)

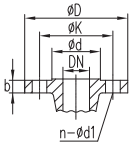

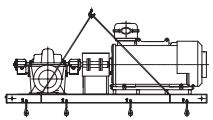

Center of Gravity List		
PUMP	X	580
	Y	0
	Z	620
MOTOR	X	–965.5
	Y	0
	Z	690
UNIT	X	–15
	Y	0
	Z	650

Rotation: Anti–Clockwise viewed from the drive–end

Static loading calculation results		
FXStatic=±	15660	N
FYStatic=±	19560	N
FZStatic=±	–27368/53368	N
MXStatic=±	30934	N*m
MYStatic=±	27004/22063	N*m
MZStatic=±	33676	N*m

Dynamic loading calculation results		
FXdynamic=±	0	N
FYdynamic=±	68	N
FZdynamic=±	68	N
MXdynamic=±	917/–822	N*m
MYdynamic=±	51	N*m
MZdynamic=±	51	N*m

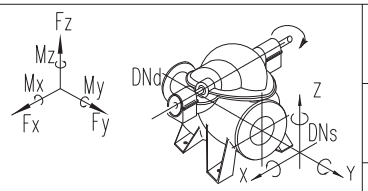

DISCHARGE	6"	±4980	±6220	±4100	±4600	±2360	±3520
	inch	Fx	Fy	Fz	Mx	My	
	DN	Force (N)			Moment (Nm)		
SUCTION	10"	±10680	±13340	±8900	±10040	±4880	±7600
	inch	Fx	Fy	Fz	Mx	My	
	DN	Force (N)			Moment (Nm)		

Nozzle Allowable Force & Moment

Drain	ANSI B16.5 300lb RF	3/4"	117.3	15.7	82.5	42.9	4–Ø18
Discharge	ANSI B16.5 300lb RF	6"	317.5	36.5	269.7	216	12–Ø22
Suction	ANSI B16.5 300lb RF	10"	444.5	47.7	387.3	323.8	16–Ø29.5
Name	Standard	DN	ØD	b	ØK	Ød	n–Ød1

Flange Size

REV.	DATE	DESCRIPTION	ORIG.	PREP.	CH'D.	APP'D.	Contractor APP'D
6	15.Nov.2014	FOR APPROVAL	DBP	Thomas	Andy	Ryan	
5	24.Oct.2014	FOR APPROVAL	DBP	Thomas	Andy	Ryan	
4	30.Jun.2014	FOR APPROVAL	DBP	Thomas	Andy	Ryan	
3	6.Jun.2014	FOR APPROVAL	DBP	Thomas	Andy	Ryan	
2	6.May.2014	FOR APPROVAL	DBP	Thomas	Andy	Ryan	
1	19.Mar.2014	FOR APPROVAL	DBP	Thomas	Andy	Ryan	
0	20.JAN.2014	FOR APPROVAL	DBP	Thomas	Andy	Ryan	

SOUTH PARS GAS FIELD DEVELOPMENT–
PHASES 20 & 21, ASSALUYEH–IRAN
ONSHORE FACILITIES

NIOC
PARS OIL AND GAS COMPANY

PROJECT No.: POGC–572–88–35 | DOC.CLASS: | SCALE :

DEEP BLUE PUMP CO.

OIEC

103–P–103A/B, 203 A/B
STABILISED CONDENSATE EXPORT PUMPS
GENERAL ARRANGEMENT DRAWING

DRAWING No. VP–SP2021–ON–MA–103–P103–0001 | SHEET No. 1 OF 1 | REV. 6