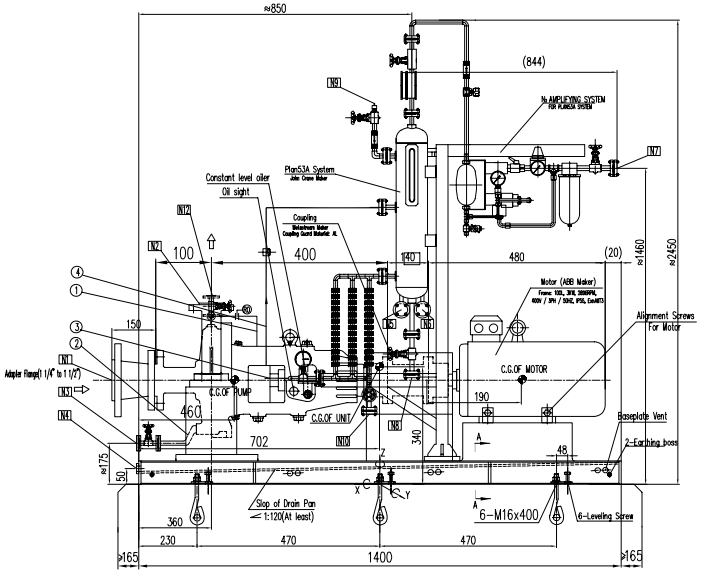

EARTHING BOSS

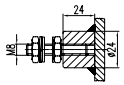

K View

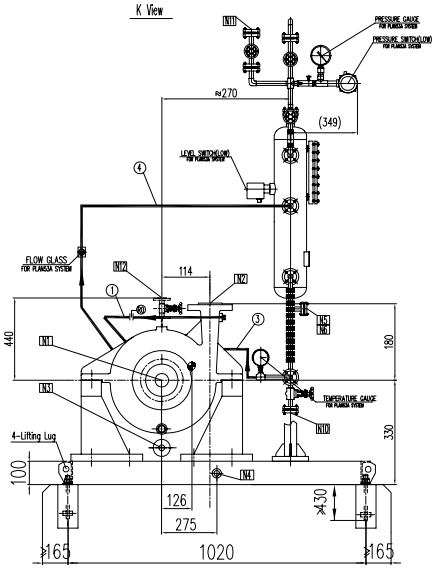

PROCESS CONNECTIONS			
Code	Size & Rating	Description	Remark
N1	1 1/2"-ANSI 300lb-RF	Suction	
N2	3/4"-ANSI 300lb-RF	Discharge	
N3	3/4"-ANSI 300Lb-RF	Pump Drain	Flange With valve & blind flange
N4	G2"	Baseplate Drain	
N5	3/4"-ANSI 150Lb-RF	Cooling Water Inlet of Plan53A	Blind Flange
N6	3/4"-ANSI 150Lb-RF	Cooling Water Outlet of Plan53A	Blind Flange
N7	3/4"-ANSI 300Lb-RF	N6 Connection	Flange With valve
N8	3/4"-ANSI 300Lb-RF	Plan53A Drain	Flange With valve & blind flange
N9	1/2" Quick Fittings	Plan53A Filling	Quick connection
N10	3/4"-ANSI 300Lb-RF	Plan53A Cooler Drain	Flange With valve & blind flange
N11	3/4"-ANSI 300Lb-RF	Plan53A Vent	Flange With valve & blind flange
N12	3/4"-ANSI 300Lb-RF	Pump Vent	Flange With valve & blind flange

Pipeline Description	
①	Plan11 Flushing Pipeline
②	Pump Drain
③	Plan53A Flushing Pipeline (to seal chamber)
④	Plan53A Flushing Pipeline (from seal chamber)

WEIGHT TABLE			
PUMP	:	75	KG
MOTOR	:	61	KG
SEAL SYSTEM	:	90	KG
BASE PLATE	:	330	KG
OTHERS	:	11	KG
TOTAL WEIGHT	:	567	KG

Maximum Allowable Amplitude For Foundation			
Velocity(PEAK)	:	4	mm/s
Displacement	:	25.4	μm

GENERAL NOTES

PUMP INFORMATION	
Item No.:	103-P-102/202 A/B
Unit:	103
Service:	STABILISER REFLUX PUMPS
Model:	APIFLO-LF 32-20-200
Seal Plan:	11+53A+61
Motor:	3KW

1. Valve type of pump drain and vent is ball valve.

REFERENCE DRAWINGS	DWG NO.
MECH. SEAL SYSTEM DRAWING	VP-SP2021-ON-MA-103-P102-0013
MOTOR OUTLINE DRAWING	VP-SP2021-ON-MA-103-P102-0016
COUPLING DRAWING	VP-SP2021-ON-MA-103-P102-0008

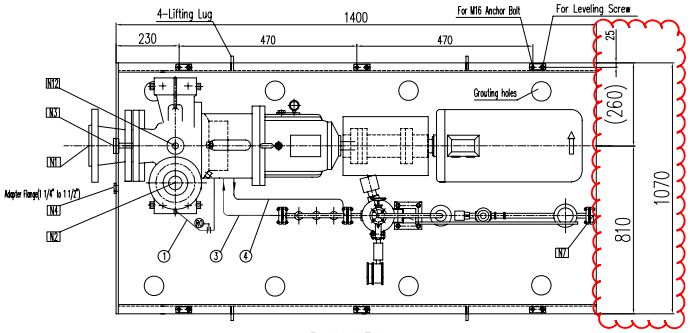

PLAN VIEW

A-A

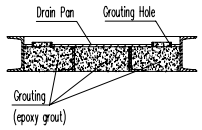

ANCHOR BOLT

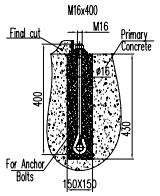

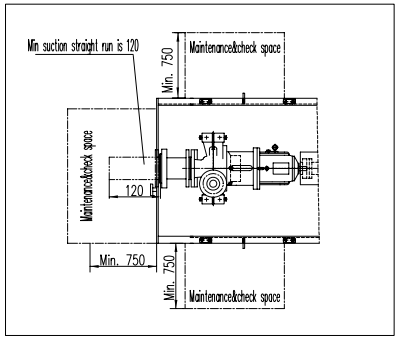

Rotation: Clockwise viewed from the drive-end

Code		
Code1	■	(Approved) Vendor to submit "For Final (No comment & release for manufacturing)
Code2	☐	(Approved with comments) Vendor shall correct / revise & submit it as "For Final" (Released for manufacturing if change incorporated as indicated)
Code3	☐	(Commented) : Vendor shall correct / revise & resubmit . It as " For Approval" of the date specified : (Corrected documents to be
Code4	☐	Not Acceptable quality (Reject)

The above checking result by OIEC shall in no way relieve Vendor of any liability, obligation and responsibility out of the purchase order and the mutual agreement in writing

OIEC-SP 20&21

DATE : 26/04/2014
DEPT: Machinery
Signature : Salem

Only for internal review

CV	PI	EL	IN	ME	MA
ST	BU	PR	SA	HV	TL

Static loading calculation results		
FXStatic=±	3200	N
FYStatic=±	2580	N
FZStatic=±	-1994/7874	N
MXStatic=±	2900	N*m
MYStatic=±	3551/3144	N*m
MZStatic=±	2419	N*m

Dynamic loading calculation results		
FXdynamic=±	0	N
FYdynamic=±	9	N
FZdynamic=±	9	N
MXdynamic=±	13/-7	N*m
MYdynamic=±	3	N*m
MZdynamic=±	3	N*m

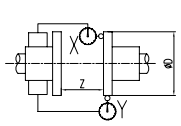

D≤200	X	≤0.05	
	Y	≤0.05	
	Z	Z±0.1	
200<D≤300	X	≤0.08	
	Y	≤0.08	
	Z	Z±0.15	
300<D≤400	X	≤0.10	
	Y	≤0.10	
	Z	Z±0.2	

MAX. ALLOWABLE MISALIGNMENT(mm)

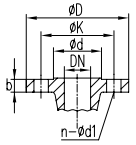

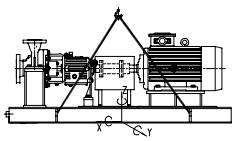

Center of Gravity List		
PUMP	X	342
	Y	0
	Z	330
MOTOR	X	-400
	Y	0
	Z	330
UNIT	X	0
	Y	126
	Z	340

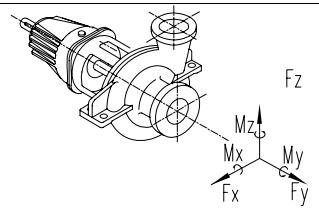

DISCHARGE	3/4"	±1420	±1160	±1780	±920	±460	±700
	inch	Fx	Fy	Fz	Mx	My	
	DN	Force (N)			Moment (Nm)		
SUCTION	1 1/2"	±1780	±1420	±1160	±920	±460	±700
	inch	Fx	Fy	Fz	Mx	My	
	DN	Force (N)			Moment (Nm)		

Nozzle Allowable Force & Moment

N3	Drain	ANSI B16.5 300lb RF	3/4"	117.3	15.7	82.5	42.9	4-ø18
N2	Discharge	ANSI B16.5 300lb RF	3/4"	117.3	15.7	82.5	42.9	4-ø18
N1	Suction	ANSI B16.5 300lb RF	1 1/2"	155.4	20.5	114.3	73	4-ø22
	Name	Standard	DN	øD	b	øK	ød	n-ød1

Flange Size

REV.	DATE	DESCRIPTION	ORIG.	PREP.	CH'D.	APP'D.	Contractor APP'D
4	12.Apr.2014	FOR APPROVAL	DBP	Apple	Ryan	Tino	
3	03.Dec.2013	FOR APPROVAL	DBP	Apple	Ryan	Tino	
2	28.Oct.2013	FOR APPROVAL	DBP	Apple	Ryan	Tino	
1	14.Aug.2013	FOR APPROVAL	DBP	Apple	Ryan	Tino	
0	23.MAY.2013	FOR APPROVAL	DBP	Apple	Ryan	Tino	

SOUTH PARS GAS FIELD DEVELOPMENT-
PHASES 20 & 21, ASSALUYEH-IRAN
ONSHORE FACILITIES

NIOC
PARS OIL AND GAS COMPANY

PROJECT No.: POGC-572-88-35 | DOC.CLASS: | SCALE :

DEEP BLUE PUMP CO.

OIEC

103-P-102A/B 103-P-202A/B
STABILISER REFLUX PUMPS
GENERAL ARRANGEMENT DRAWING

DRAWING No.	VP-SP2021-ON-MA-103-P102-0001	SHEET No.	1 OF 1	REV.	4