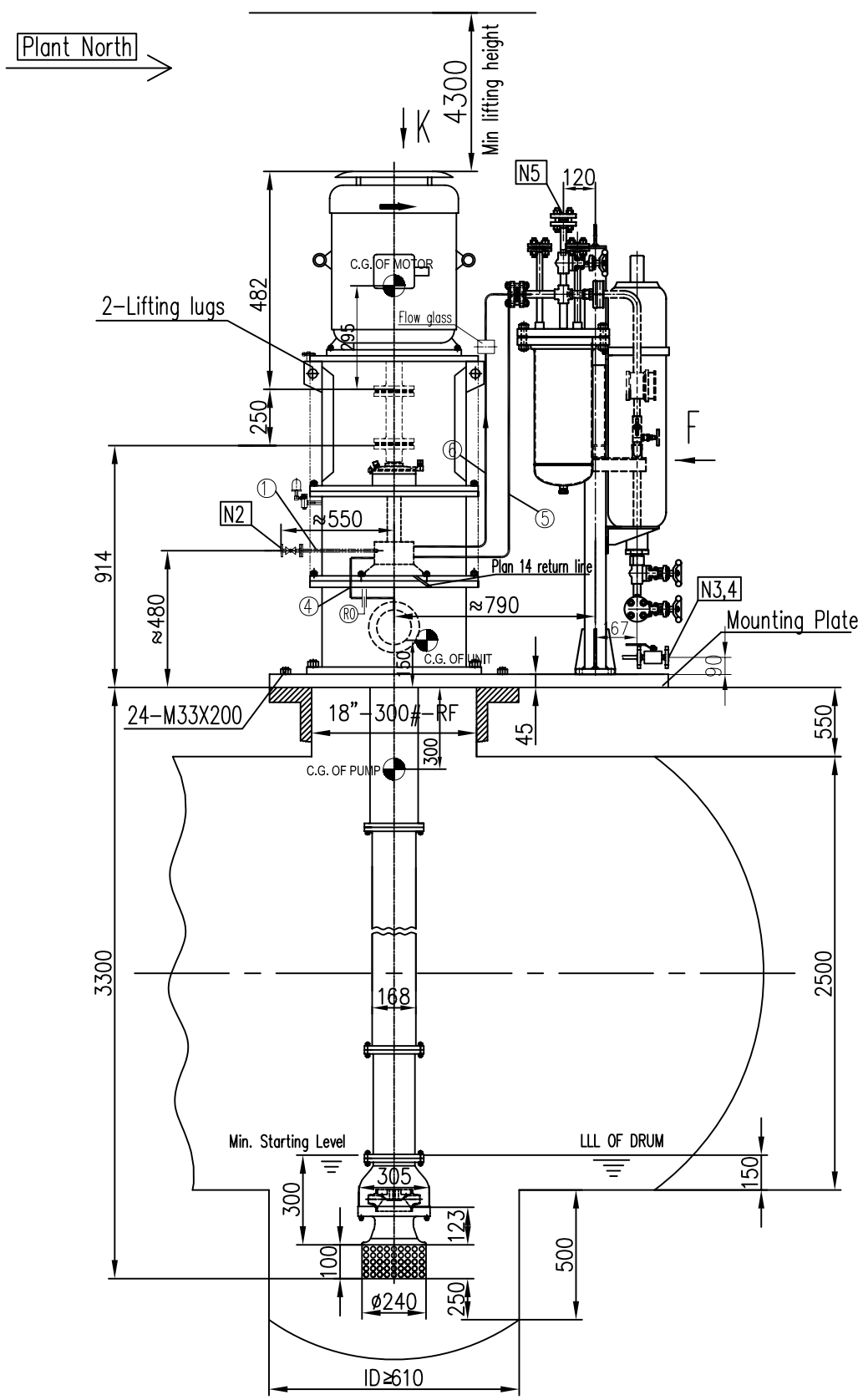

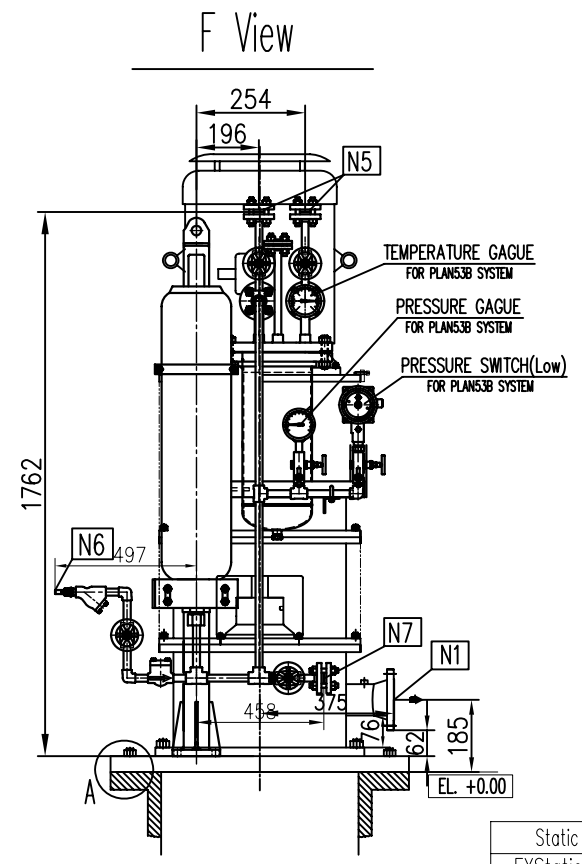

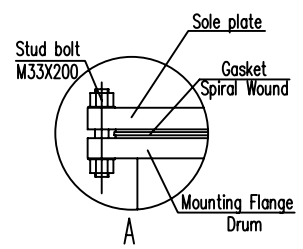

PROCESS CONNECTIONS			
Code	Description	Size & Rating	Remark
N1	Pump Discharge Flange	1 1/2", ASME B16.5 300LB RF	
N2	Pump Vent Flange	3/4", ASME B16.5 300LB RF	Flange with ball valve
N3	Cooling Water Inlet	1", ASME B16.5 150LB RF	Flange with ball valve
N4	Cooling Water Outlet	1", ASME B16.5 150LB RF	Flange with ball valve
N5	Plan 53B vent	1/2", ASME B16.5 1500LB RF	Flange with gate valve
N6	Plan 53B filling	1/2" NPT, Quick Fittings	
N7	Plan 53B drain	1/2", ASME B16.5 1500LB RF	Flange with gate valve

Pipeline Description	
①	Seal vent pipe
②	Main cooling water inlet
③	Main cooling water outlet
④	Plan14 Flushing pipeline
⑤	Plan53B Flushing pipeline (to seal chamber)
⑥	Plan53B Flushing pipeline (from seal chamber)

WEIGHT TABLE		
PUMP	860	KG
MOTOR	85.4	KG
SEAL SYSTEM	336	KG
BASEPLATE	120	KG
OTHERS	50	KG
TOTAL WEIGHT	1451.4	KG
ROTOR WEIGHT	103	KG
MAX. MAINTENANCE WEIGHT	290	KG

Static loading calculation results		
FXStatic=±	2840	N
FYStatic=±	3560	N
FZStatic=±	-12954/17594	N
MXStatic=±	3094	N*m
MYStatic=±	1573	N*m
MZStatic=±	1993	N*m

Dynamic loading calculation results		
FXdynamic=±	159	N
FYdynamic=±	159	N
FZdynamic=±	0	N
MXdynamic=±	165	N*m
MYdynamic=±	165	N*m
MZdynamic=±	18/-18	N*m

PUMP INFORMATION	
Item No:	01-150-P-2 A/S
Service:	SOUR WATER SUMP PUMP
Model:	LDB 20-35-B-V
Seal Plan:	14+53B
Motor:	5.5KW-2910RPM
Motor Critical Speed:	7500RPM

REFERENCE DRAWING	DWG NO.
Seal System Drawing	BU-01-VD-307-MA-DRW-1502-076
Motor outline Drawing	BU-01-VD-307-MA-DRW-1502-108
Coupling Drawing	BU-01-VD-307-MA-DRW-1502-044
Pump Data Sheet	BU-01-VD-307-MA-DSH-1502-012

Note: 1. Pump rotation direction: CCW viewed from the drive-end.
2. Vessel item number is 01-150-V-2.
3. Vibration Level complies to API610 requirement, table 8 and table 9.
4. Bolt&nut and related gasket for mounting plate will be provided by DBP.

Code1	☑	(Approved) No comment and the document is released for Manufacturing
Code2	☐	(Approved with comments) Vendor shall correct, revise and resubmit the document The document is released for manufacturing
Code3	☐	(Commented) : Vendor shall correct / revise & resubmit document
Code4	☐	Not Acceptable quality (Reject)

The above checking result by EIED shall in no way relieve Vendor of any liability, obligation and responsibility out of the purchase order and the mutual agreement in writing

EIED
BUSHEHR PROJECT

DATE 28 November 2015
DEPT MA
Sign M.F.
CODE 1

K View

MOUNTING PLATE: DN 450 ASME B16.5 300LB RF

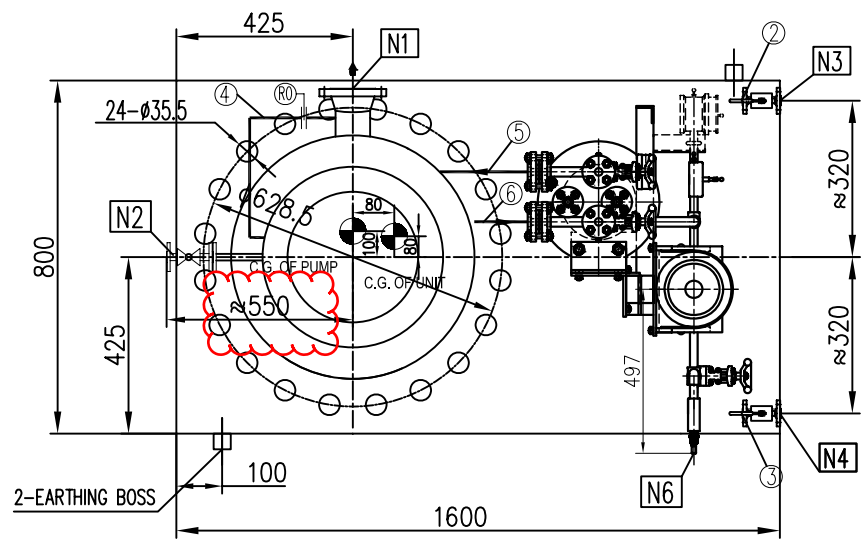

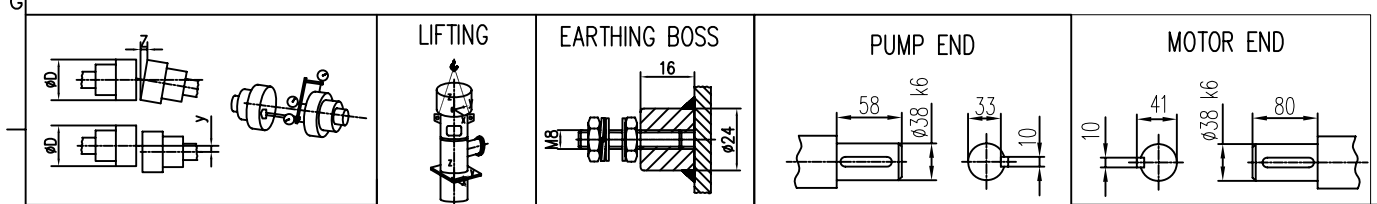

Outer Diameter Coupling (D)	Radial Displacement	Axial Tilt
D ≤ 200	< 0.05	< 0.2 / 1000
200 < D ≤ 300	< 0.08	< 0.3 / 1000
300 < D ≤ 400	< 0.1	< 0.4 / 1000
MAX. ALLOWABLE MISALIGNMENT(mm)		

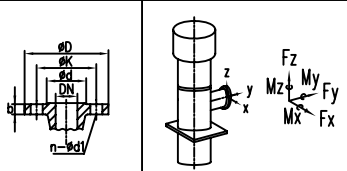

Nozzle Allowable Force & Moment			
Discharge (1 1/2")	Fx	Fy	Fz
	±1420	±1780	±1160
	Force (N)		
	Mx	My	M
	±920	±460	±700
	Moment(Nm)		

Minimum Clearance for impeller & casingwear ring	0.4~0.45 mm		
Pump shaft information			
Name	Upper Shaft	Middle Shaft	Lower Shaft
Length(mm)	1100	1558	1440
Quantigy	1	2	1

Remark:
1. Moment of inertia: 0.032 kg.m2

REV.	DATE	PURPOSE OF ISSUE	PREP. BY	CHKD. BY	APPD. BY	AUTH. BY
04	7/11/15	FOR APPROVAL	Eric	Andy	Tino	AAP
03	13/10/15	FOR APPROVAL	Eric	Andy	Tino	AAP
02	29/08/15	FOR APPROVAL	Eric	Andy	Tino	AAP
01	08/07/15	FOR APPROVAL	Eric	Andy	Tino	AAP
00	25/03/15	FOR APPROVAL	Eric	Andy	Tino	AAP

Gas Sweetening, Sulphur Recovery, C2 Recovery, Fractionation and Inter Connection Pipeline Between Plants Project

BUSHEHR PETROCHEMICAL COMPANY

P.O No.: A315.760AME

SCALE:

DEEP BLUE PUMP

EIED Energy Industries Engineering & Design Co.

DRAWING TITLE:
Pump Outline Drawing for SOUR WATER SUMP PUMP
01-150-P-2 A/S

DRAWING No.: BU-01-VD-307-MA-DRW-1502-012

SHEET No. 1 OF 1