DRAWING NO. DEK038445 | REV. 04

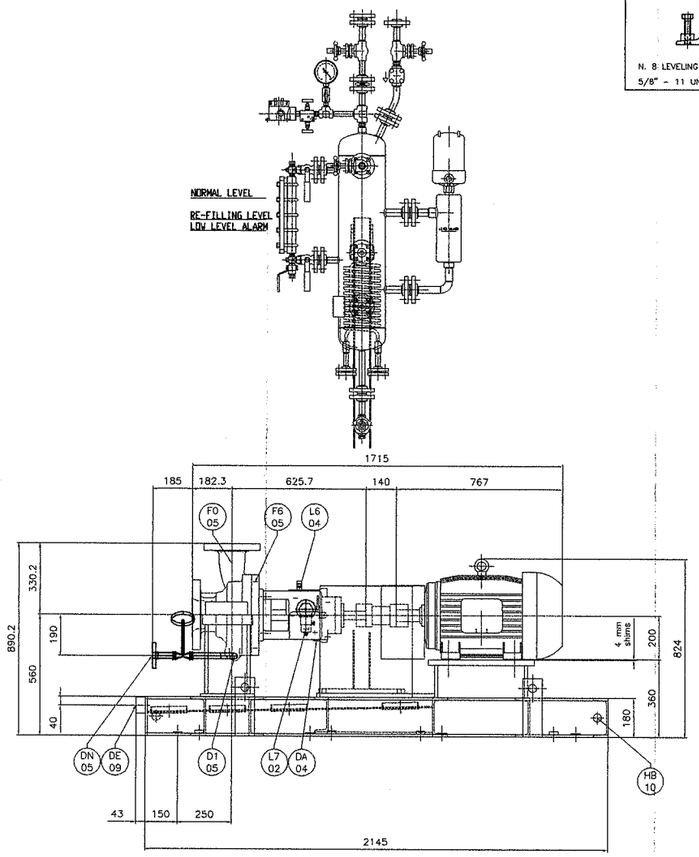

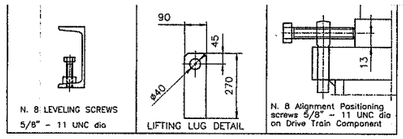

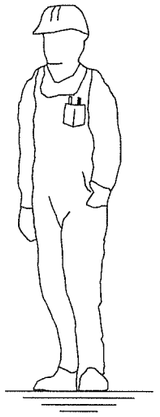

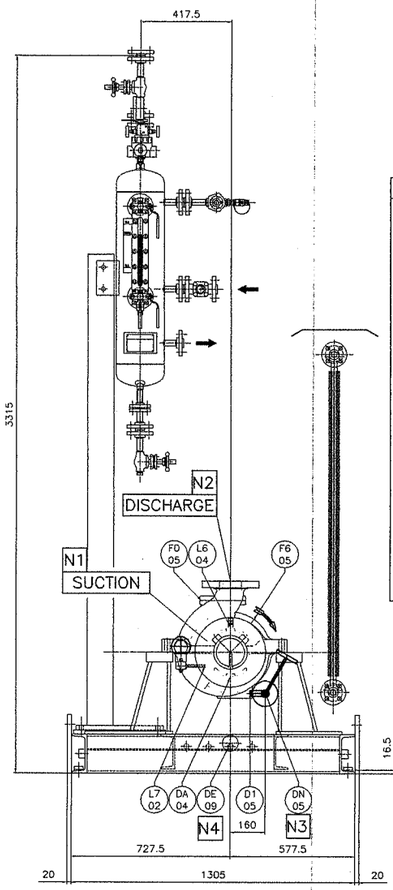

Aux.Piping Slope as per API 682

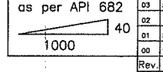

Rev.	Date	Description	Drw.	Chk'd	Appr.
04	30.03.07	REVISED	FJZ	JKR	SW
03	21.04.06	REVISED	G.A.	R.G.	F.R.
02	19.01.06	REVISED	G.A.	R.G.	F.R.
01	23.11.2005	REVISED	G.A.	R.G.	F.R.
00	14.07.2005	FIRST ISSUE	G.A.	R.G.	F.R.

REVISIONS
FOR FPD INTERNAL USE ONLY

CENTERS OF GRAVITY (mm)

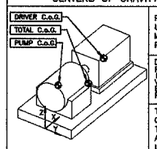

PUMP	X	515
	Y	–20
	Z	590
DRIVER	X	1590.7
	Y	10
	Z	585
TOTAL	X	1175
	Y	–2
	Z	415

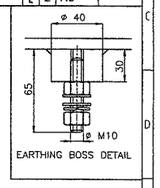

EARTHING BOSS DETAIL

FLUSHING LINE API PLAN 11 (Sketch)

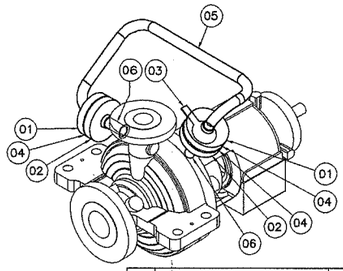

ITEM	DESCRIPTION	Q.ty	MATERIAL	NOTES
06	Pipe 3/4"		AISI 316L	sch.160
05	Pipe 3/4"		AISI 316L	sch.80
04	Gasket	3	S.STEEL/ASB.FREE	
03	Orifice 3 dia	1	AISI 316L	
02	Flange 3/4" ANSI 600 RF S.W.	2	AISI 316L	sch.160
01	Flange 3/4" ANSI 600 RF S.W.	2	AISI 316L	sch.80

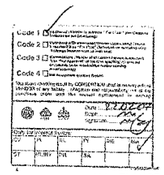

SELF VENTING PUMP
ALL FLANGE HOLES STRADDLE CENTERLINE
ALL FLANGES WILL BE SMOOTH FINISH 125–250 AARH

		SUCTION 8" dia ASME 300 RF	DISCHARGE 4" dia ASME 300 RF
		mm	mm
DB	Nominal Bore Dia.	154	102
OD	Outside Flange Dia.	320	255
BC	Bolt Circle Dia.	269.9	200
NF	Number of Holes	12	8
DF	Holes Diameter	22.2	22.2
RF	Raised Face Dia.	215.9	157.2
TK	Raised Face Thick.	2	2
TF	Flange Thick.	35	30.2

El.Motor :
Type : 200L
HZ: 50 KW: 30 PHASE: 3 V : 400 RPM : 2960
ENCL/FRAME: DWG:

Coupling METASTREAM
Type : TSKS0033
with non sparking guard Material : Aluminium

MECHANICAL SEAL CONNECTIONS

FI	ON BODY	
BI	3/4" NPT	Barrier Fluid Inlet
BO	3/4" NPT	Barrier Fluid Outlet
QI	1/2" NPT	Quench Inlet
D	1/2" NPT	Drain

COUPLING END VIEW

	2 x FORCES N API 610				2 x MOMENTS Nm API 610			
	Fx	Fy	Fz	Fr	Mx	My	Mz	Mr
DISCHARGE	2840	2320	3560	5120	2660	1360	2000	3600
SUCTION	6220	4980	4100	8960	4600	2360	3520	6260

FOUNDATION LOADS (approx. Weight)

PUMP :	KG .	220
BASE & COUPL :	KG .	535
MOTOR :	KG .	253
TOTAL :	KG .	1008

DYNAMIC LOADS ARE NEGLIGIBLE

CROSS SECTION DWG: DCE000196
MECHANICAL SEAL FLOWSERVE API CODE BDAIN
TYPE : QBBW/QBW–2625/2500–5UKX/5UKX DWG: DCT003842
FLUSHING LINE API PLAN 11/53/61
COOLING LINE N.A.

CONTRACT No. PDGC–760–81–156
PROJECT SOUTH PARS GAS DEVELOPMENT
SITE ASSALUYEH PERSIAN GULF
SERVICE HC CONDENSATE INTERTANK TRANSFER PUMP
ITEM 143–P–101
SERIAL N. D85121

ALL PIPINGS / TUBES WILL BE ADEQUATELY SUPPORTED AT ASSEMBLY

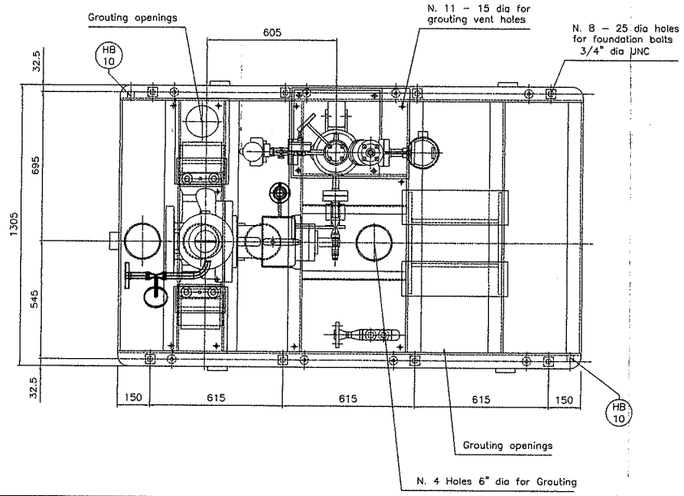

Item	POS	Q.	CONN.TYPE	DESCRIPTION
	D1 05	1	3/4" S.W.	Case Drain
	DA 04	1	1/2" NPT	Support Frame Oil Drain
P	N2	1	4" ANSI300RF	DISCHARGE
	N1	1	6" ANSI300RF	SUCTION
	N4		2" NPT	Baseplate Drain
	N3	1	3/4" ASME 300 RF	Drain with Gate Valve & Term.Flange (Mat.: C.Steel)
	HB 10	2	M10	Earth. Bosses on opposite side
	L6 04	1	1/2" NPT	Breath.& Oil Filling Hole
	F0 05	1	3/4" S.W.	Flushing Outlet API PLAN 11
	F6 05	1	3/4" S.W.	Flushing Inlet API PLAN 11
	L7 02	1	1/4" NPT	Constant Level Oiler

RESERVOIR CONNECTIONS

POS	Q.	CONN.TYPE	DESCRIPTION
N5	1	3/4" ANSI 600 RF	VENT / FLARE
N6	1	3/4" ANSI 600 RF	NITROGEN INLET
N7	1	1/2" NPT	FILLING
N8	1	3/4" NPT	DRAIN
N9	1	3/4" S.W.	DRAIN PLAN 53A
N10	1	1/2"NPT	LG DRAIN – DRAIN PLUGGED
N11	1	1/2"NPT	LG VENT – DRAIN PLUGGED

FLUSHING LINE API PLAN 53A (Sketch)

FOR PLAN53A RESERVOIR DETAILS SEE DWG : A1N56089

FOR MECH.SEAL DETAILS SEE DWG : DCT003842

FOR FINNED AIR DETAILS SEE DWG : A2N56720

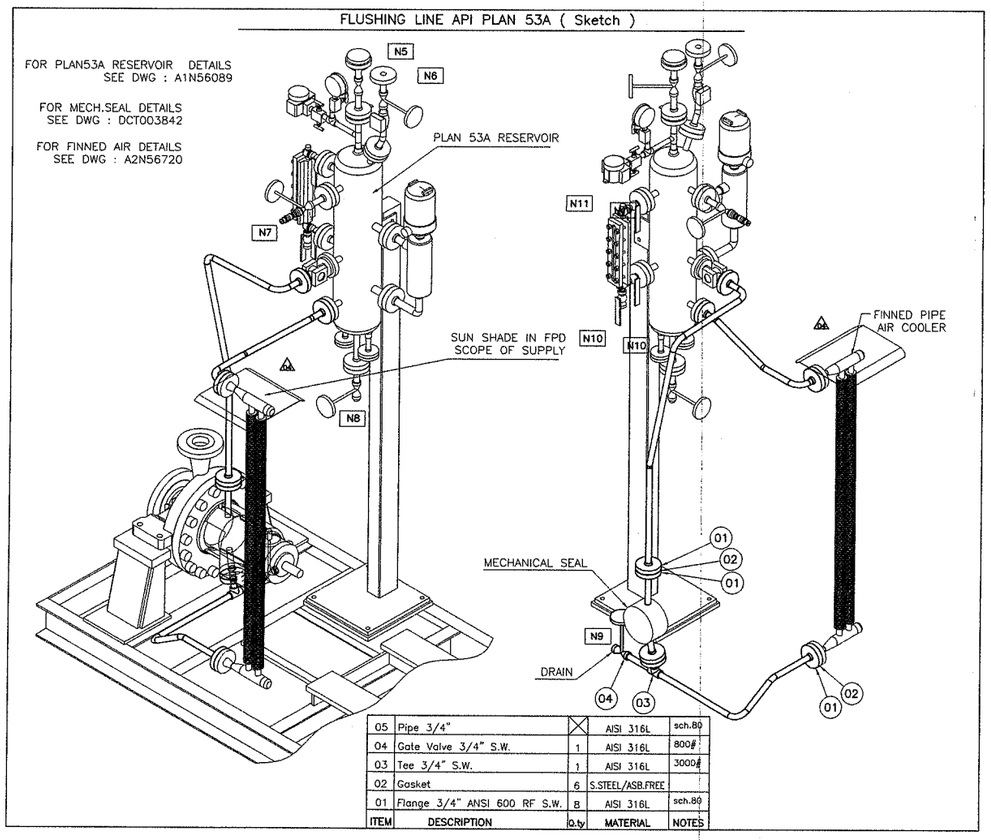

ITEM	DESCRIPTION	Q.ty	MATERIAL	NOTES
05	Pipe 3/4"		AISI 316L	sch.80
04	Gate Valve 3/4" S.W.	1	AISI 316L	800#
03	Tee 3/4" S.W.	1	AISI 316L	3000#
02	Gasket	6	S.STEEL/ASB.FREE	
01	Flange 3/4" ANSI 600 RF S.W.	8	AISI 316L	sch.80

FOR APPROVAL

FLOWSERVE Pump Division | DRWG. No.: P714627 | REV./02

05HY0659

CUSTOMER'S NOZZLES POSITION TOLERANCES
ALL CUSTOMER CONNECTIONS LOCATIONS DIMENSIONS HAVE A TOLERANCE OF ±10 (.6 inch) EXCEPT FOR THE PUMP SUCTION AND DISCHARGE NOZZLES WHICH HAVE A TOLERANCE OF ±0.4 (.25 inch)

BASEPLATE TOLERANCES ACCORDING TO API 610 Annex D

TOLERANCES UNLESS OTHERWISE SPECIFIED	
MM	IN
.X ± 0.5	.X ± .5
.XX ± 0.25	.XX ± .25
.XXX ± 0.05	.XXX ± .125
.XXXX ± 0.005	.XXXX ± .025

1st Angle Projection

STATUS OF APPROVAL: CERTIFIED
ORDER No. 2005FLE0234121
DRAWN BY Gasmoucate A. DATE 14/07/2005
CHECKED BY Rossetti C. DATE 14/07/2005
APPROVED BY Pistorio R. DATE 14/07/2005
EXISTING K15143-00000 Substitutes
CAD File : A2005FLE0234121K1

CUSTOMER INFORMATION

FLOWSERVE Pump Division Dealo Operation

DWG TITLE 4HPX10A CENTRIFUGAL PUMP GENERAL ARRANGEMENT

SIZE	DRAWING NO.	REV.
A0	DEK038445	04

SCALE 1/10 | UNITS metric | SHEET NO. 1/1

FOUNDATION DETAIL

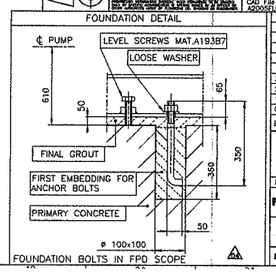

FOUNDATION BOLTS IN FPD SCOPE

Rev.	Date	Description	ORIGI	PRPD	CHKD	APP'D	Contractor Approved
3	30.03.07	FOR APPROVAL		FJZ	JKR	SW	
2	21.04.06	FOR APPROVAL		G.A.	R.G.	F.R.	
1	19.01.06	REVISED		G.A.	R.G.	F.R.	
0	11/07/2005	FIRST ISSUE		G.A.	R.G.	F.R.	

SOUTH PARS GAS FIELD DEVELOPMENT - PHASES 9&10, ASSALUYER - IRAN ONSHORE FACILITIES

Project No. : PDGC-760-81-156 | Doc. Class : | Scale :

FLOWSERVE | GTEC

TITLE: HC CONDENSATE INTERANK TRANSFER PUMP 143-P-101 GENERAL ARRANGEMENT

DRAWING No. VP-6340-143-P101-115 | SHT No. 1 of 1 | Rev. 3