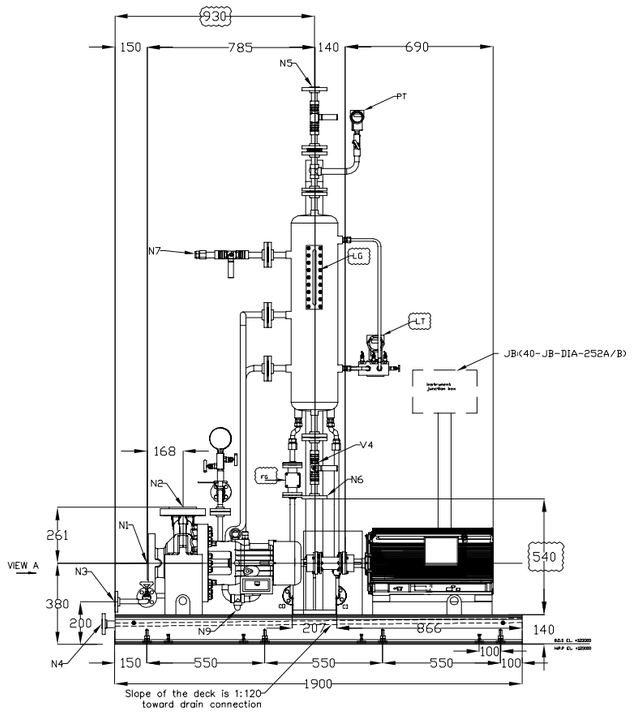

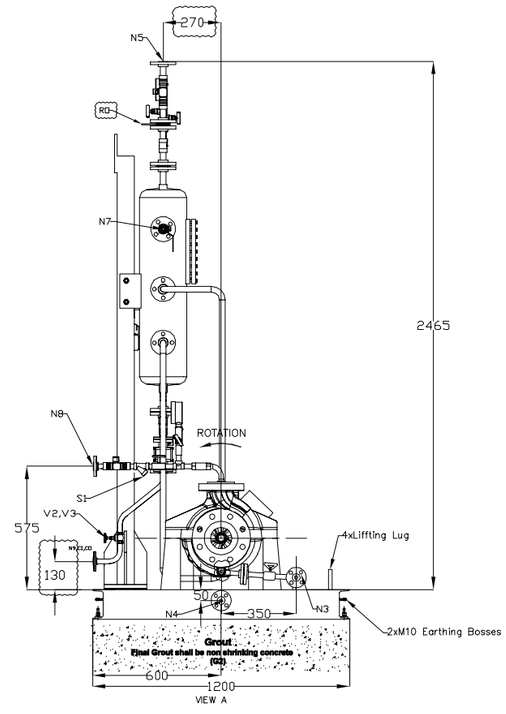

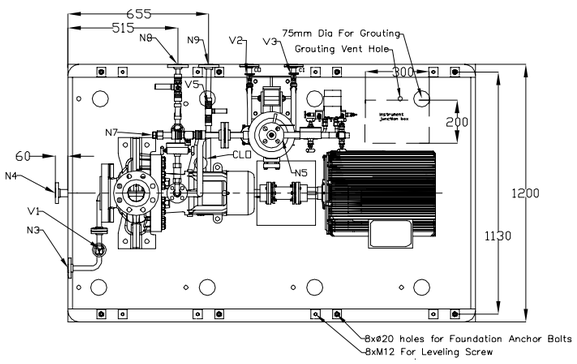

POS.	Q.	NPS	CONN. TYPE	DESCRIPTION	O (mm)	G (mm)	No.of holes	hole Ø (mm)	raised R (mm)	face S (mm)
N1	1	4"	ASME B16.5 # 300 RF	Suction Flange	254	200	8	22.2	157.2	1.6
N2	1	3"	ASME B16.5 # 300 RF	Discharge Flange	210	168.3	8	22.2	127	1.6
N3	1	3/4"	ASME B16.5 # 300 RF	Pump Drain Flange	117	82.6	4	19	42.9	1.6
N4	1	2"	ASME B16.5 # 150 RF	Base Plate Drain Flange	152	120.6	4	19	92.1	1.6
N5	1	1/2"	ANSI # 300 RF	Sealing System Vent Flange	95	66.7	4	15.8	34.9	1.6
N6	1	1/2"	ASME # 300 RF	Reservoir Drain Flange	95	66.7	4	15.8	34.9	1.6
N7	1	1/2"		Quick Coupler For nitrogen filling						
N8	1	1/2"	ASME B16.5 # 300 RF	Sealing System Flange(HHX)	95	66.7	4	15.8	34.9	
N9	1	1/2"	ASME B16.5 # 300 RF	Sealing System Drain Flange	95	66.7	4	15.8	34.9	
CI	1	1/2"	ASME # 150 RF	Cooling Water Inlet	89	60.3	4	15.8	34.9	1.6
CO	1	1/2"	ASME # 150 RF	Cooling Water Outlet	89	60.3	4	15.8	34.9	1.6
CLO	1		CLO	Constant level oiler						
FG	1	1/2"	Flanged ANSI # 150RF	Flow Indicator						
V1	1	3/4"	Gate Valve # 800	Pump Drain Valve						
V2	1	1/2"	Gate valve #800	Cooling Water Outlet valve						
V3	1	1/2"	Gate valve #800	Cooling Water Inlet valve						
V4	1	1/2"	Ball valve #800	Heat Exchanger Drain valve						
V5	1	1/2"	Ball valve #800	Sealing system Drain valve						
S1	1	1/2''	#800 SS-316	strainer						

PI-01)
BY VENDOR.

Instrument Number	
PT	40-PT-218A/B
LT	40-LT-212A/B
FG	40-FG-218A/B
RO	40-RO-218A/B
PG	40-PG-218A/B
LG	40-LG-218A/B

REFERENCE DOCUMENTS	DOC. NO.
Pump Data Sheet and Performance Curve for 40-P-202A/B	VP-40-000-MA-0011-0030
Pump cross sectional drawing and Part list for 40-P-202A/B	VP-40-000-MA-0011-0102
Motor data sheets for 40-P-202A/B	VP-40-000-MA-0011-0174
Motor outline drawing for 40-P-202A/B	VP-40-000-MA-0011-0246
Coupling Drawing for 40-P-202A/B	VP-40-000-MA-0011-0138
Pump P&ID for 40-P-202A/B	VP-40-000-MA-0011-0282

NOTE

1-All Dimension are mm.
2-Coupling guard is Aluminium.
3-Material of base plate is st37 & bolt A193 Gr B7 and nut A194 Gr 2H.
4-Maintenance Area is 2m from Motor end and 1m from other sides.
5-All Dimension Clearances are according to ISO 286-1.

-Bolt material shall conform to specification ASTM A193 Grade B7 (anchor bolts shall be partly hot dip galvanized in thread length plus 100mm length embedded into concrete).
-Anchor bolt and nut will be supplied by IIP
-All nuts&washers shall be hot dip galvanized according to ASTM A153
-Grout thickness:30mm

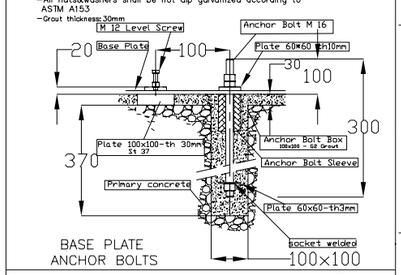

BASE PLATE
ANCHOR BOLTS

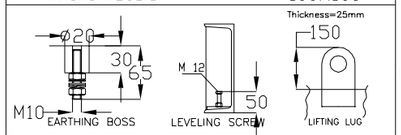

EARTHING BOSS
LEVELING SCREW
LIFTING LUG

NOZZLE LOADS

	FORCE N 2XAPI 610				MOMENTS Nm 2XAPI 610			
	Fx	Fy	Fz	F#	Mx	My	Mz	M#
SUCTION :	3560	2840	2320	5120	2660	1360	2000	3600
DISCHARGE :	2140	1780	2660	3860	1900	940	1440	2560

FOUNDATION LOADS (approx. weight)

PUMP :	190	Kg
MOTOR :	238	Kg
BASE PLATE&SEALING SYSTEM :	950	Kg
TOTAL :	1378	Kg

VIBRATION LEVEL (ISO 2372)
Alarm : V(RMS) > 3 mm/sec
Trip : V(RMS) > 4.5 mm/sec

Max.MISSALIGNMENT

AXIAL 1.5 (mm) | RADIAL 1.2 (mm) | ANGULAR 0.5 (degree)

PUMP NOZZLES: ASME B16.5

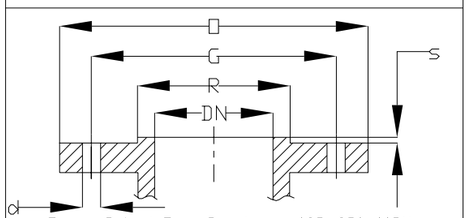

Flange Raised Face Roughness 125~250 AARH

ELECTRICAL MOTOR

MODEL :	Schorch	PHASE :	3
FRAME :	180	VOLTAGE :	400
KW :	22	Hz :	50
RPM :	3000		

Pump Type: IOH2-80-250

Sealing System Plan: 32/52

COUPLING & Coupling Guard
COUPLING MANUFACTURER: IIP Group
MODEL : Flexible Spacer Type

CENTER OF GRAVITY

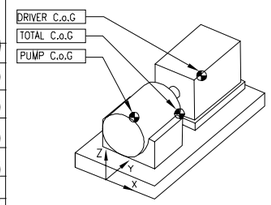

		(mm)
PUMP	X	60
	Y	380
	Z	510
DRIVER	X	0
	Y	1450
	Z	380
BASE	X	0
	Y	950
	Z	120
TOTAL	X	11
	Y	961
	Z	252

Code1	■ *Approved:* No comment and the document is released for Manufacturing.
Code2	☐ *Approved with Minor comment:* Vendor shall correct, revise and resubmit the document. The document can be released for Manufacturing if changes Incorporated.
Code3	☐ *Commented:* Vendor shall correct, revise and resubmit the document by the date specified. The document shall be revised under the Status of "R: Revised Issue". All corrected documents shall be resubmitted before starting the Manufacturing.
Code4	☐ *Not Accepted (Rejected):* Vendor shall re-work/re-design/re-specify the contents of the documents according to the comments/ reasons for rejection. All corrected documents shall be resubmitted before starting the Manufacturing process. In this case vendor shall not proceed with subsequent work until receiving code 1 or code 2 or no code from CONSULTANT / OWNER / MC. VENDOR shall resubmit the documents with the same revision within (10) working days(including transmission/mailing time) after receiving the commented documents from CONSULTANT / OWNER / MC.
No Code	☐ *No Code(Only for" FOR INFORMATION" documents and "As-Built DWGs"* Document has been submitted for CONSULTANT / OWNER / MC's information(FI) consistency, completeness and correctness of documents content is in VENDOR/EPC contractor responsibility.

Above checking results by EIED shall in no way relieve Vendor of any liability, obligation and responsibility out of the purchase order and the mutual agreement in writing.

EIED
DATE : 19.12.2021
DEPT. : MA
Signature : S.Razani

Only for internal review

CV	PI	EL	IN	ME	MA
ST	AR	PR	SA	HV	TL

REV.	DATE	STATUS	PURPOSE OF ISSUE	PREP.	CHKD.	APPD.	AUTH.
04	11.Dec.2021	R	Issue for Approval	A.K	M.B	A.N	GH.P
03	28.Sep.2021	R	Issue for Approval	A.K	M.B	A.N	GH.P
02	22.Aug.2021	R	Issue for Approval	A.K	S.G	A.N	GH.P
01	14.July.2021	R	Issue for Approval	A.K	S.G	A.N	GH.P
00	29.Jun.2021	F	Issue for Approval	A.K	S.G	A.N	GH.P

EIED

Soroush Mahestan Asalayeh Company
HDPE Project

IIP GROUP

P.O DESCRIPTION: Centrifugal pumps

Contract No SMAC-H-19/804 | P.O No. KP-40-000-PS-MA-PO-0011 | SCALE: None

DRAWING TITLE:
General Arrangement Drawing for 40-P-202A/B

DRAWING NO.	REV.	SHEET No.	SIZE
VP-40-000-MA-0011-0066	04	1 OF 1	A3

This document is the sole property of Soroush Mahestan Asalayeh Co. and all information contained herein may neither be reproduced, used, disclosed, transmitted nor in any way made public without permission of the Owner.