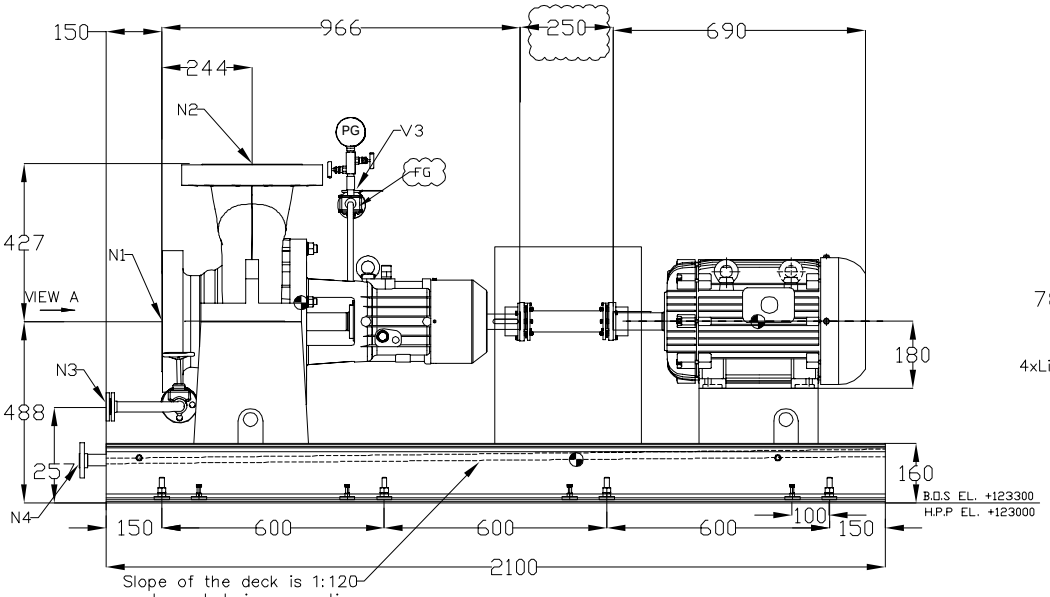

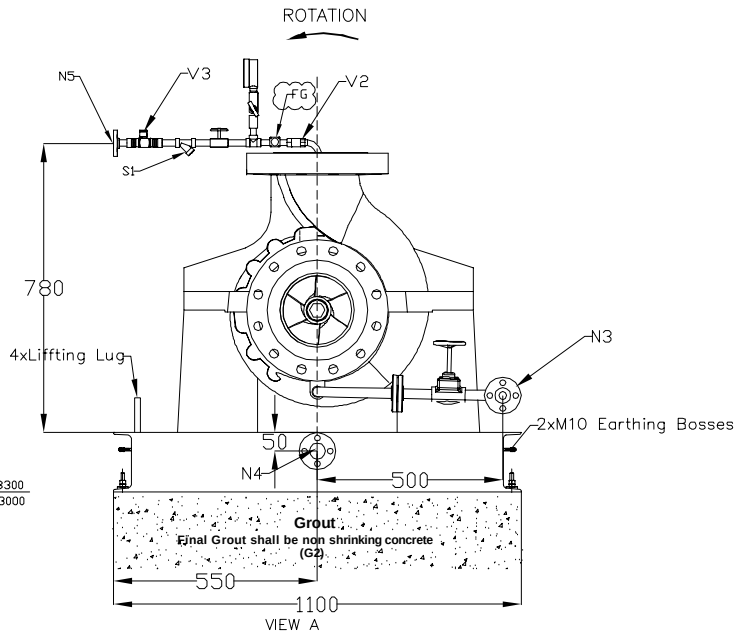

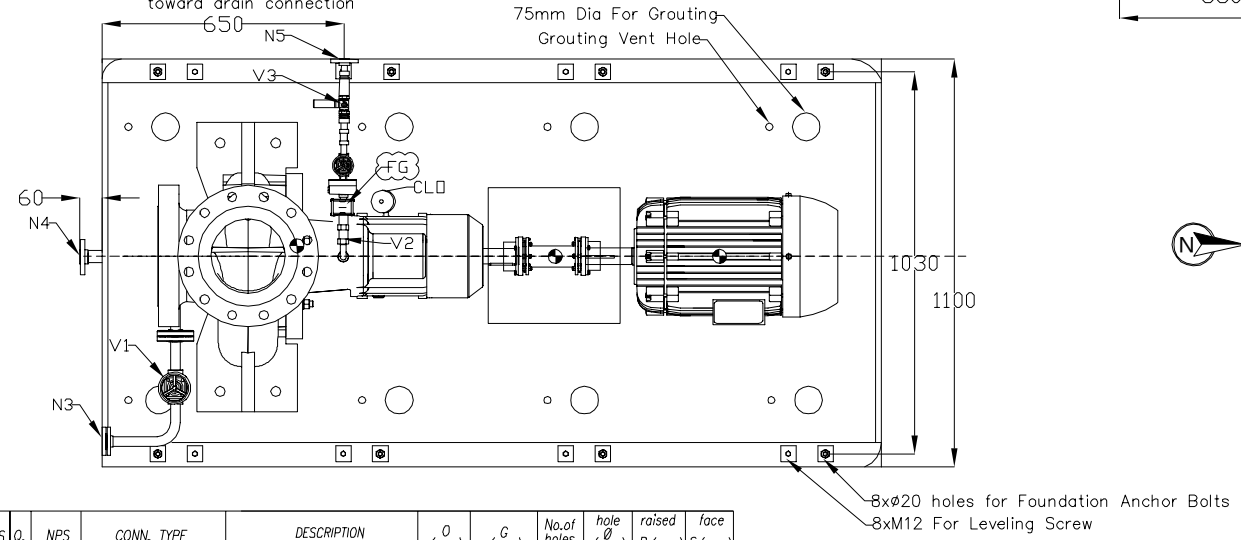

REFERENCE DOCUMENTS	DOC. NO.
Pump Data Sheet and Performance Curve for 40-P-204	VP-40-000-MA-0011-0031
Pump cross sectional drawing and Part list for 40-P-204	VP-40-000-MA-0011-0103
Motor data sheets for 40-P-204	VP-40-000-MA-0011-0175
Motor outline drawing for 40-P-204	VP-40-000-MA-0011-0247
Coupling Drawing for 40-P-204	VP-40-000-MA-0011-0139
Pump P&ID for 40-P-204	VP-40-000-MA-0011-0283

NOTE

1-All Dimension are mm.
2-Coupling guard is Aluminium.
3-Material of base plate is st37 & bolt A193 Gr B7 and nut A194 Gr 2H.
4-Maintenance Area is 2m from Motor and and 1m from other sides.
5-All Dimension Clearances are according to ISO 286-1.

-Bolt material shall conform to specification ASTM A193 Grade B7 (anchor bolts shall be partly hot dip galvanized in thread length plus 100mm length embedded into concrete).
-Anchor bolt and nut will be supplied by IIP
-All nuts&washers shall be hot dip galvanized according to ASTM A153
-Grout thickness: 30mm

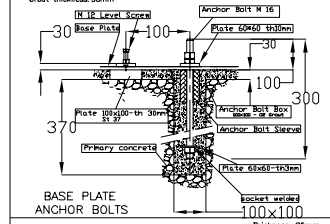

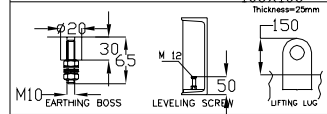

NOZZLE LOADS

	FORCE N				MOMENTS Nm			
			2XAPI 610				2XAPI 610	
	Fx	Fy	Fz	Fr	Mx	My	Mz	Mr
SUCTION :	9780	7560	6220	13840	7060	3620	5160	9420
DISCHARGE	7560	6220	9780	13840	7060	3520	5160	9420

FOUNDATION LOADS (approx. weight)

PUMP :	395	Kg
MOTOR :	267	Kg
BASE PLATE&SEALING SYSTEM :	600	Kg
TOTAL :	1262	Kg

VIBRATION LEVEL (ISO 2372)
Alarm : V(RMS) > 3 mm/sec
Trip : V(RMS) > 4.5 mm/sec

Max.MISSALIGNMENT

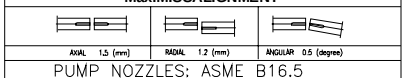

AXIAL 1.5 (mm)	RADIAL 1.2 (mm)	ANGULAR 0.5 (degree)

PUMP NOZZLES: ASME B16.5

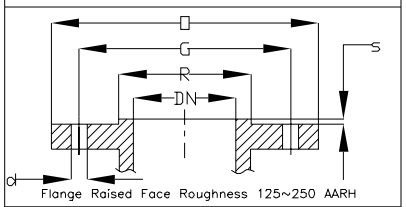

Flange Raised Face Roughness 125~250 AARH

ELECTRICAL MOTOR

MODEL :	Schorch	PHASE :	3
FRAME :	180	VOLTAGE :	400
KW :	22	Hz :	50
RPM :	1500		

Pump Type: IOH2-200-315

Sealing System Plan: 32

COUPLING & Coupling Guard
COUPLING MANUFACTURER: IIP Group
MODEL : Flexible Spacer Type

CENTER OF GRAVITY

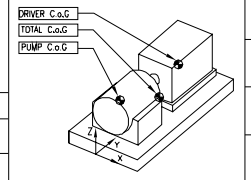

		(mm)
PUMP	X	29
	Y	526
	Z	560
DRIVER	X	0
	Y	1731
	Z	508
BASE	X	0
	Y	1267
	Z	136
TOTAL	X	8.5
	Y	1103
	Z	304

POS.	Q.	NPS	CONN. TYPE	DESCRIPTION	O (mm)	G (mm)	No.of holes	hole Ø (mm)	raised R (mm)	face S (mm)
N1	1	8"	ASME B16.5 # 300 RF	Suction Flange	381	330.2	12	25.4	269.9	1.6
N2	1	8"	ASME B16.5 # 300 RF	Discharge Flange	381	330.2	12	25.4	269.9	1.6
N3	1	3/4"	ASME B16.5 # 300 RF	Pump Drain Flange	117	82.6	4	19	42.9	1.6
N4	1	2"	Driling #150 RF	Base Plate Drain Flange	152	120.6	4	19	92.1	1.6
N5	1	1/2"	ASME B16.5 # 300 RF	Seal Sys. flangeplant water (PWA)	156	114.3	4	22.2	73	1.6
V1	1	3/4"	Gate Valve # 800	Pump Drain Valve						
V2	1	1/2"	#800 SS-316	Check Valve						
V3	1	1/2"	#800 SS-316	Ball Valve						
S1	1	1/2"	#800 SS-316	strainer						
FG	1	1/2"	Flanged ANSI # 150RF	Flow Indicator						
CLO	1		CLO	Constant level oiler						

Instrument Number	
FI	40-FG-220
PG	40-PG-221F

Code1	■ Approved: No comment and the document is released for Manufacturing.
Code2	☐ Approved with Minor comment: Vendor shall correct, revise and resubmit the document. The document can be released for Manufacturing if changes incorporated.
Code3	☐ Commented: Vendor shall correct, revise and resubmit the document by the date specified. The document shall be revised under the Status of "R: Revised Issue". All corrected documents shall be resubmitted before starting the Manufacturing.
Code4	☐ Not Accepted (Rejected): Vendor shall re-work/re-design/re-specify the contents of the documents according to the comments/ reasons for rejection. All corrected documents shall be resubmitted before starting the Manufacturing process. In this case vendor shall not proceed with subsequent work until receiving code 1 or code 2 or no code from CONSULTANT / OWNER / MC. VENDOR shall resubmit the documents with the same revision within (10) working days(including transmission/mailing time) after receiving the commented documents from CONSULTANT / OWNER / MC.
No Code	☐ No Code(Only for" FOR INFORMATION" documents and "As-Built DWGS" Document has been submitted for CONSULTANT / OWNER / MC's information(FI) consistency, completeness and correctness of documents content is in VENDOR/EPC contractor responsibility.

Above checking results by EIED shall in no way relieve Vendor of any liability, obligation and responsibility out of the purchase order and the mutual agreement in writing.

EIED
DATE : 04.12.2021
DEPT. : MA
Signature : S.Razani

Only for internal review

CV	PI	EL			
ST	AR	PR	SA	HV	TL

REV.	DATE	STATUS	PURPOSE OF ISSUE	PREP.	CHKD.	APPD.	AUTH.
04	24.Nov.2021	R	Issue for Approval	A.K	M.B	A.N	GH.P
03	26.Sep.2021	R	Issue for Approval	A.K	M.B	A.N	GH.P
02	12.Sep.2021	R	Issue for Approval	M.B	S.G	A.N	GH.P
01	23.Aug.2021	R	Issue for Approval	A.K	S.G	A.N	GH.P
00	17.July.2021	F	Issue for Approval	A.K	S.G	A.N	GH.P

EIED — Soroush Mahestan Asaloyeh Company HDPE Project

IIP GROUP — P.O DESCRIPTION: Centrifugal pumps

Contract No. 9660-00-19/2004 — P.O No. KP-40-000-PS-MA-PO-0011 — SCALE: None

DRAWING TITLE:
General Arrangement Drawing for 40-P-204

DRAWING NO. VP-40-000-MA-0011-0067 — REV. 04 — SHEET No. 1 OF 1 — SIZE A3

This document is the sole property of Soroush Mahestan Asaloyeh Co. and all information contained herein may neither be reproduced, used, disclosed, transmitted nor in any way made public without permission of the Owner.