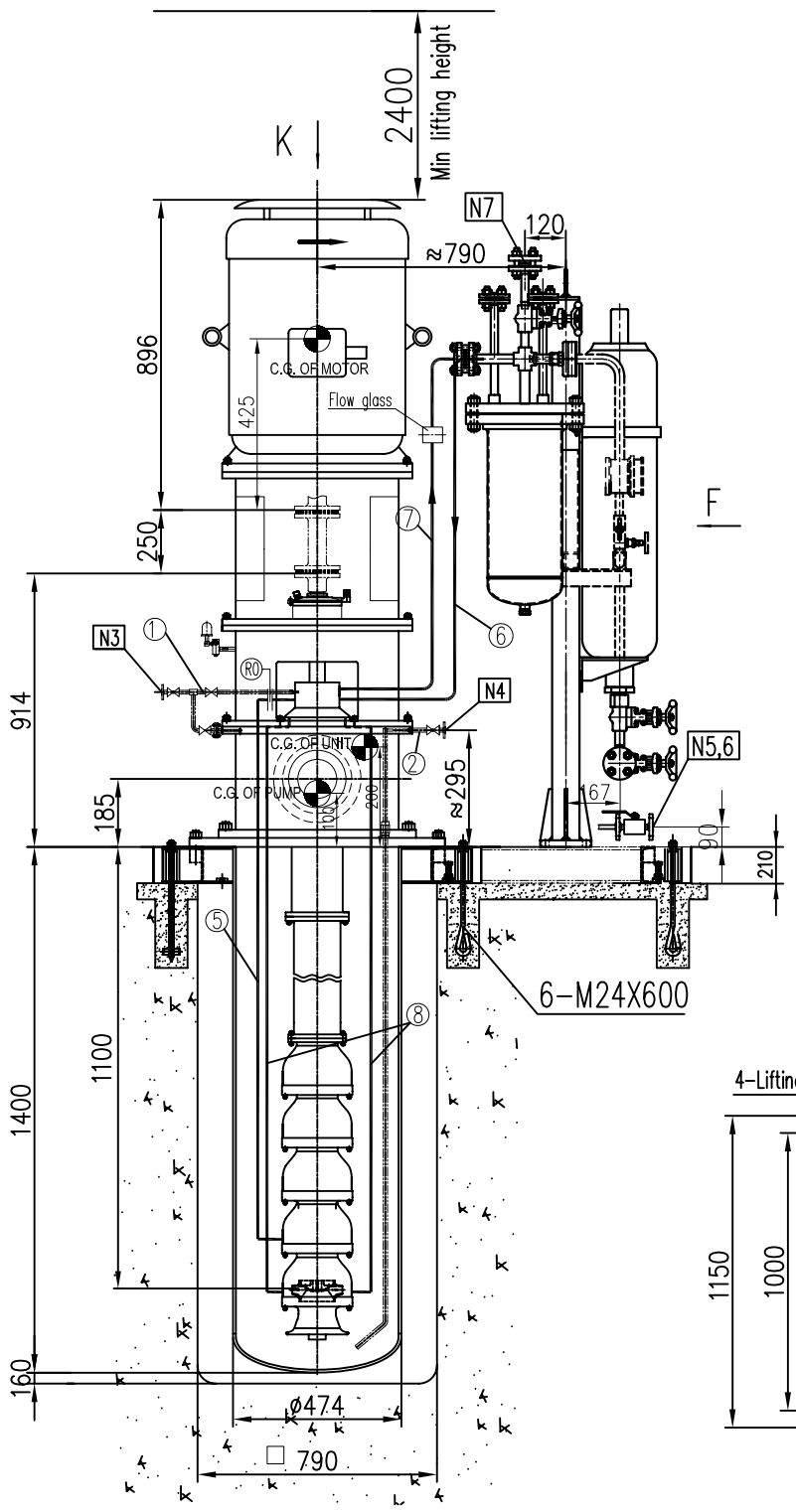


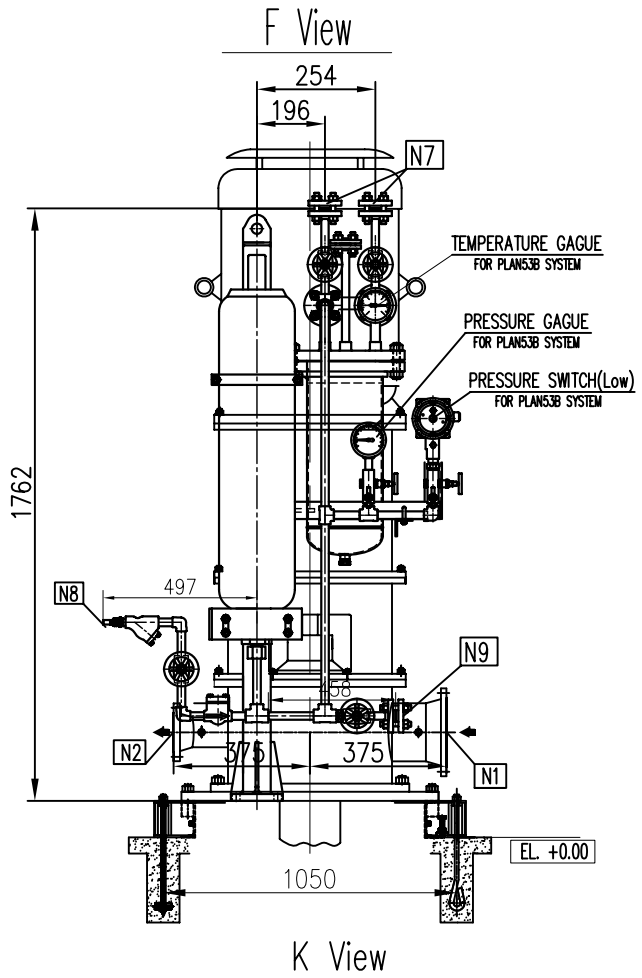


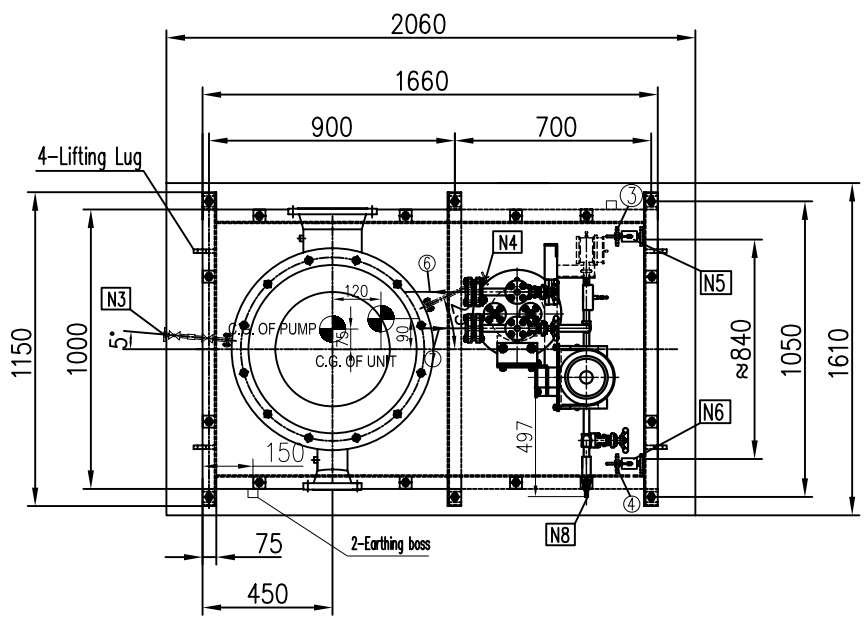


| PROCESS CONNECTIONS | | | |
|---|---|---|---|
| Code | Description | Size & Rating | Remark |
| N1 | Pump Suction Flange | 3", ASME B16.5 300LB RF | |
| N2 | Pump Discharge Flange | 1 1/2", ASME B16.5 300LB RF | |
| N3 | Pump Vent Flange | 3/4", ASME B16.5 300LB RF | Flange with ball valve |
| N4 | Pump Barrel Drain Flange | 3/4", ASME B16.5 300LB RF | Flange with ball valve |
| N5 | Cooling Water Inlet Flange | 1", ASME B16.5 150LB RF | Flange with ball valve |
| N6 | Cooling Water Outlet Flange | 1", ASME B16.5 150LB RF | Flange with ball valve |
| N7 | Plan 53B vent | 1/2", ASME B16.5 1500LB RF | Flange with gate valve |
| N8 | Plan 53B filling | 1/2" NPT, Quick Fittings | |
| N9 | Plan 53B drain | 1/2", ASME B16.5 1500LB RF | Flange with gate valve |

| Pipeline Description | |
|---|---|
| ① | Seal vent pipe |
| ② | Barrel drain pipe |
| ③ | Main cooling water inlet |
| ④ | Main cooling water outlet |
| ⑤ | Plan14 Flushing pipeline |
| ⑥ | Plan53B Flushing pipeline (to seal chamber) |
| ⑦ | Plan53B Flushing pipeline (from seal chamber) |
| ⑧ | Balance pipeline & Plan 14 return line |

| WEIGHT TABLE | | |
|---|---|---|
| PUMP | 860 | KG |
| MOTOR | 461 | KG |
| SEAL SYSTEM | 336 | KG |
| BASEPLATE | 120 | KG |
| OTHERS | 50 | KG |
| TOTAL WEIGHT | 1827 | KG |
| ROTOR WEIGHT | 120 | KG |
| MAX. MAINTENANCE WEIGHT | 290 | KG |

| Static loading calculation results | | |
|---|---|---|
| FXStatic=± | 3560 | N |
| FYStatic=± | 4440 | N |
| FZStatic=± | -18897/24777 | N |
| MXStatic=± | 5676 | N*m |
| MYStatic=± | 2806 | N*m |
| MZStatic=± | 3475 | N*m |
| Dynamic loading calculation results | | |
| FXdynamic=± | 185 | N |
| FYdynamic=± | 185 | N |
| FZdynamic=± | 0 | N |
| MXdynamic=± | 22 | N*m |
| MYdynamic=± | 22 | N*m |
| MZdynamic=± | 146/-146 | N*m |

Remark:

1. Moment of inertia: 0.1 kg.m2

| PUMP INFORMATION | |
|---|---|
| Item No: | 01-415-P-1 A/B |
| Service: | HIGH PRESSURE FLARE DEA / HC PUMPS |
| Model: | LDB 30-35X5-B |
| Seal Plan: | 14+53B |
| Motor: | 45KW-2970RPM |
| Motor Critical Speed: | 4500RPM |

| REFERENCE DRAWING | DWG NO. |
|---|---|
| Seal System Drawing | BU-01-VD-003-MA-DRW-4151-078 |
| Motor outline Drawing | BU-01-VD-003-MA-DRW-4151-110 |
| Coupling Drawing | BU-01-VD-003-MA-DRW-4151-046 |
| Pump Data Sheet | BU-01-VD-307-MA-DSH-4151-014 |
| | |

Note: 1. Pump rotation direction: CCW viewed from the drive-end.
2. Vibration Level complies to API610 requirement, table 8 and table 9.

| | | |
|---|---|---|
| Code1 | ☑ | (Approved) No comment and the document is released for Manufacturing |
| Code2 | ☐ | (Approved with comments) Vendor shall correct, revise and resubmit the document The document is released for manufacturing |
| Code3 | ☐ | (Commented) : Vendor shall correct / revise & resubmit document |
| Code4 | ☐ | Not Acceptable quality (Reject) |

The above checking result by EIED shall in no way relieve Vendor of any liability, obligation and responsibility out of the purchase order and the mutual agreement in writing.

EIED BUSHEHR PROJECT

DATE : 4 November 2015
DEPT: MA
Signat: M.F.
CODE 1

| REV. | DATE | PURPOSE OF ISSUE | PREP. BY | CHKD. BY | APPD. BY | AUTH. BY |
|---|---|---|---|---|---|---|
| 03 | 13/10/15 | FOR APPROVAL | Eric | Andy | Tino | AAP |
| 02 | 29/08/15 | FOR APPROVAL | Eric | Andy | Tino | AAP |
| 01 | 08/07/15 | FOR APPROVAL | Eric | Andy | Tino | AAP |
| 00 | 24/03/15 | FOR APPROVAL | Eric | Andy | Tino | AAP |

Gas Sweetening, Sulphur Recovery, C2 Recovery, Fractionation and Inter Connection Pipeline Between Plants Project

BUSHEHR PETROCHEMICAL COMPANY

P.O No.: A315.760AME

SCALE:

DEEP BLUE PUMP

EIED Energy Industries Engineering & Design Co.

DRAWING TITLE:

Pump Outline Drawing for HIGH PRESSURE FLARE DEA / HC PUMPS

01-415-P-1 A/B

DRAWING No.: BU-01-VD-307-MA-DRW-4151-014 SHEET No. 1 OF 1

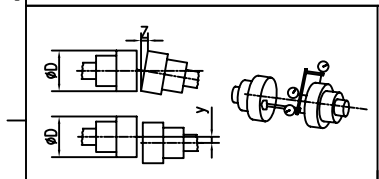

| Outer Diameter Coupling (D) | Radial Displacement | Axial Tilt |
|---|---|---|
| D ≤ 200 | < 0.05 | < 0.2 / 1000 |
| 200 < D ≤ 300 | < 0.08 | < 0.3 / 1000 |
| 300 < D ≤ 400 | < 0.1 | < 0.4 / 1000 |
| MAX. ALLOWABLE MISALIGNMENT(mm) | | |

LIFTING

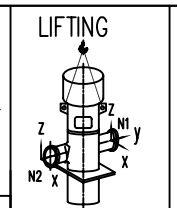

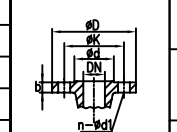

EARTHING BOSS

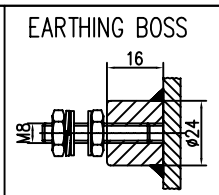

Anchor Bolt

M24*600

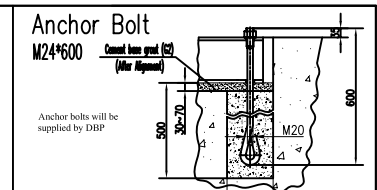

PUMP END

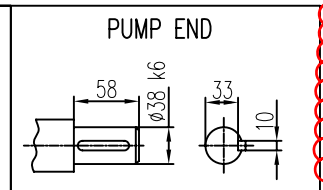

MOTOR END

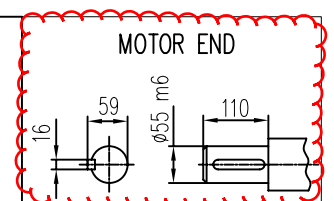

| | | | | | | | |
|---|---|---|---|---|---|---|---|
| DISCHARGE | 1 1/2" | ±1420 | ±1780 | ±1160 | ±920 | ±460 | ±700 |
| | inch | Fx | Fy | Fz | Mx | My | Mz |
| | DN | Force (N) | | | Moment(Nm) | | |
| SUCTION | 3" | ±2140 | ±2660 | ±1780 | ±1900 | ±940 | ±1440 |
| | inch | Fx | Fy | Fz | Mx | My | Mz |
| | DN | Force (N) | | | Moment(Nm) | | |

Nozzle Allowable Force & Moment

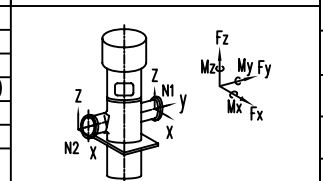

| Minimum Clearance for impeller & casingwear ring | 0.4~0.45 mm |
|---|---|

| Pump shaft information | | | |
|---|---|---|---|
| Name | Upper Shaft | Middle Shaft | Lower Shaft |
| Length(mm) | 2060 | NA | 1302 |
| Quantigy | 1100 | NA | 1036 |