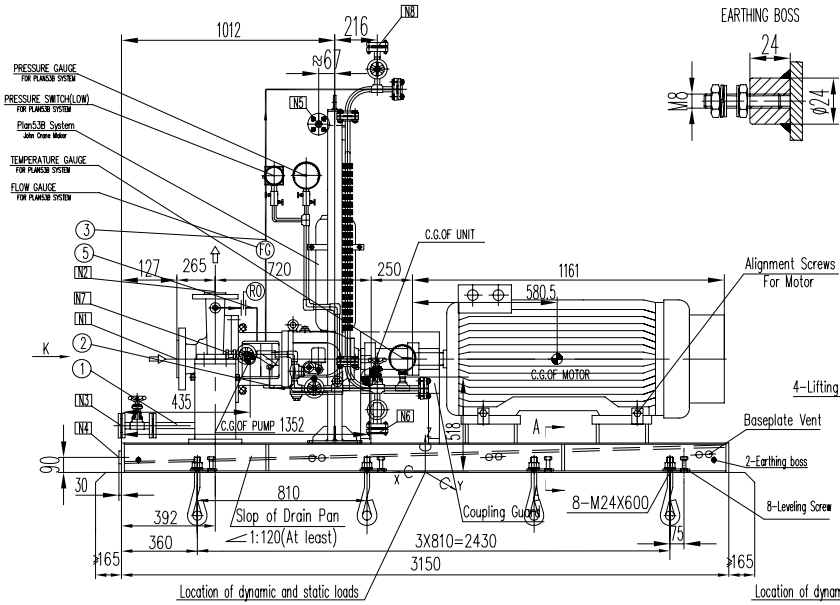


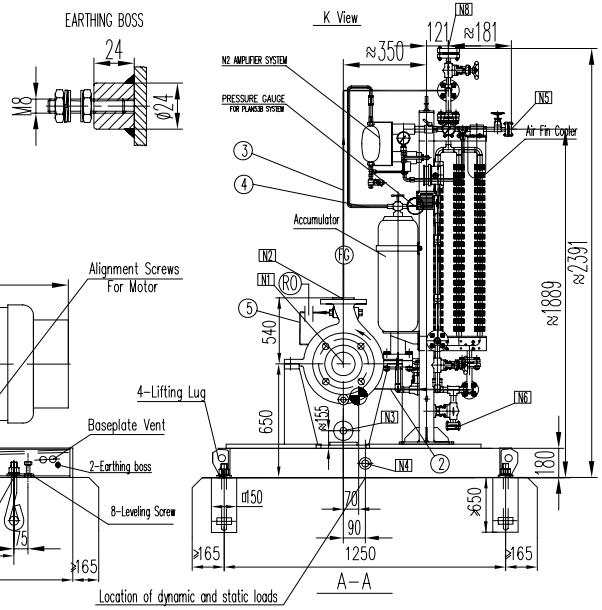


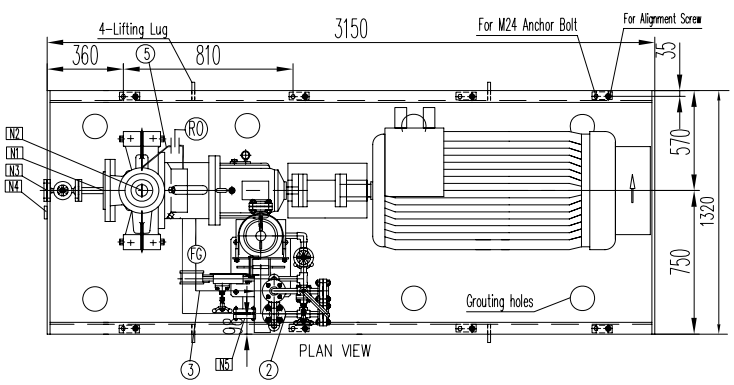


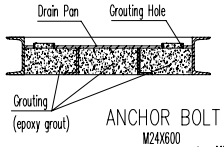


ANCHOR BOLT

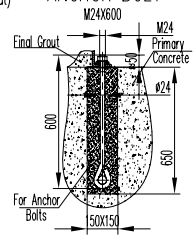


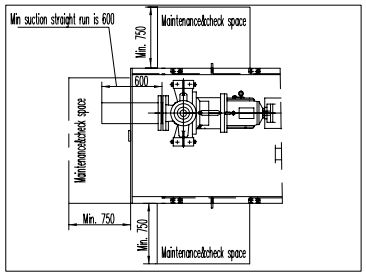


| PROCESS CONNECTIONS | | | |
|---|---|---|---|
| Code | Size & Rating | Description | Remark |
| N1 | 8"-ANSI 300Lb-RF | Pump Suction | |
| N2 | 8"-ANSI 300Lb-RF | Pump Discharge | |
| N3 | 3/4"-ANSI 300Lb-RF | Pump Drain | Flange with valve & blind flange |
| N4 | G2" | Baseplate Drain | |
| N5 | 1/2"-ANSI 600Lb-RF | N2 Connection | Flange with valve |
| N6 | 3/4"-ANSI 600Lb-RF | Plan 53B Drain | Flange with valve & blind flange |
| N7 | 1/2"-Quick Fittings | Plan 53B Filling | Quick Connection |
| N8 | 3/4"-ANSI 600Lb-RF | Plan 53B Vent | Flange with valve & blind flange |

| Pipeline Description | |
|---|---|
| 1 | Pump Drain |
| 2 | Plan53B Flushing Pipeline (to seal chamber) |
| 3 | Plan53B Flushing Pipeline (from seal chamber) |
| 4 | Plan53B $N_2$ Filling Pipeline (from Amplifier System) |
| 5 | Plan11 Flushing pipeline |

| WEIGHT TABLE | | | |
|---|---|---|---|
| PUMP | : | 776 | KG |
| MOTOR | : | 960 | KG |
| SEAL SYSTEM | : | 240 | KG |
| BASEPLATE | : | 880 | KG |
| ROTOR | : | 94 | KG |
| OTHERS | : | 20 | KG |
| TOTAL WEIGHT | : | 2876 | KG |

| Maximum Allowable Amplitude For Foundation | | | |
|---|---|---|---|
| Velocity(PEAK) | : | 4 | mm/s |
| Displacement | : | 50.8 | μm |

| PUMP INFORMATION | |
|---|---|
| Item No.: | 108-P-501A/B, 601A/B |
| Unit: | 108 |
| Service: | CIRCULATION WATER PUMPS |
| Model: | APIFLO-P 200K4-500 |
| Seal Plan: | 11+53B |
| Motor: | 132KW - 1480RPM |

NOTE: 1. Valve for pump drain is ball valve.
2. The pump is self-vent.

| REFERENCE DRAWINGS | DWG NO. |
|---|---|
| MECH. SEAL SYSTEM DRAWING | VP-SP2021-ON-MA-108-P501-0018 |
| MOTOR OUTLINE DRAWING | VP-SP2021-ON-MA-108-P501-0014 |
| COUPLING DRAWING | VP-SP2021-ON-MA-108-P501-0008 |

| | | |
|---|---|---|
| Code1 | ■ | (Approved) Vendor to submit "For Final (No comment & release for manufacturing) |
| Code2 | ☐ | (Approved with comments) Vendor shall correct / revise & submit it as "For Final" (Released for manufacturing if change incorporated as indicated) |
| Code3 | ☐ | (Commented) : Vendor shall correct / revise & resubmit . It as " For Approval" of the date specified : ( Corrected documents to be |
| Code4 | ☐ | Not Acceptable quality (Reject) |

The above checking result by OIEC shall in no way relieve Vendor of any liability, obligation and responsibility out of the purchase order and the mutual agreement in writing

OIEC-SP 20&21

DATE : 22/07/2014
DEPT: Machinery
Signature : Salem

Only for internal review

| CV | PI | EL | IN | ME | MA |
|---|---|---|---|---|---|
| ST | BU | PR | SA | HV | TL |

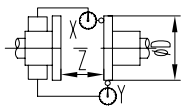


| | | |
|---|---|---|
| D≤200 | X | ≤0.05 |
| | Y | ≤0.05 |
| | Z | Z±0.1 |
| 200<D≤300 | X | ≤0.08 |
| | Y | ≤0.08 |
| | Z | Z±0.15 |
| 300<D≤400 | X | ≤0.10 |
| | Y | ≤0.10 |
| | Z | Z±0.2 |

MAX. ALLOWABLE MISALIGNMENT(mm)

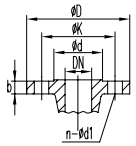


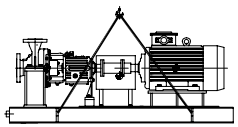

| Center of Gravity List | | |
|---|---|---|
| PUMP | X | 1140 |
| | Y | 0 |
| | Z | 650 |
| MOTOR | X | -367.5 |
| | Y | 0 |
| | Z | 650 |
| UNIT | X | 223 |
| | Y | 70 |
| | Z | 518 |

Rotation: Clockwise viewed from the drive-end

| Static loading calculation results | | |
|---|---|---|
| FXStatic=± | 17340 | N |
| FYStatic=± | 13780 | N |
| FZStatic=± | -9859/41859 | N |
| MXStatic=± | 26436 | N*m |
| MYStatic=± | 40496/39843 | N*m |
| MZStatic=± | 26214 | N*m |

| Dynamic loading calculation results | | |
|---|---|---|
| FXdynamic=± | 0 | N |
| FYdynamic=± | 38 | N |
| FZdynamic=± | 38 | N |
| MXdynamic=± | 894/-845 | N*m |
| MYdynamic=± | 38 | N*m |
| MZdynamic=± | 38 | N*m |

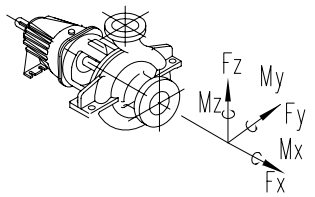


| | | | | | | | |
|---|---|---|---|---|---|---|---|
| DISCHARGE | 8" | ±7560 | ±6220 | ±9780 | ±7060 | ±3520 | ±5160 |
| | inch | Fx | Fy | Fz | Mx | My | |
| | DN | Force (N) | | | Moment (Nm) | | |
| SUCTION | 8" | ±9780 | ±7560 | ±6220 | ±7060 | ±3520 | ±5160 |
| | inch | Fx | Fy | Fz | Mx | My | |
| | DN | Force (N) | | | Moment (Nm) | | |

Nozzle Allowable Force & Moment

| | | | | | | | | |
|---|---|---|---|---|---|---|---|---|
| Drain | ANSI B16.5 300lb RF | 3/4" | 117.3 | 15.7 | 82.5 | 42.9 | 4-Ø18 |
| Discharge | ANSI B16.5 300lb RF | 8" | 381 | 41.1 | 330.2 | 270 | 12-Ø26 |
| Suction | ANSI B16.5 300lb RF | 8" | 381 | 41.1 | 330.2 | 270 | 12-Ø26 |
| Name | Standard | DN | ØD | b | ØK | Ød | n-Ød1 |

Flange Size

| REV. | DATE | DESCRIPTION | ORIG. | PREP. | CH'D. | APP'D. | Contractor APP'D |
|---|---|---|---|---|---|---|---|
| 4 | 30.Jan.2014 | FOR APPROVAL | DBP | Thomas | Andy | Ryan | |
| 3 | 06.Jan.2014 | FOR APPROVAL | DBP | Thomas | Andy | Ryan | |
| 2 | 06.May.2014 | FOR APPROVAL | DBP | Thomas | Andy | Ryan | |
| 1 | 19.Mar.2014 | FOR APPROVAL | DBP | Thomas | Andy | Ryan | |
| 0 | 20.JAN.2014 | FOR APPROVAL | DBP | Thomas | Andy | Ryan | |

SOUTH PARS GAS FIELD DEVELOPMENT-
PHASES 20 & 21, ASSALUYEH-IRAN
ONSHORE FACILITIES

NIOC
PARS OIL AND GAS COMPANY

PROJECT No.: POGC-572-88-35 | DOC.CLASS: | SCALE :

DEEP BLUE PUMP CO.

OIEC

108-P-501A/B, 601A/B
CIRCULATION WATER PUMPS
GENERAL ARRANGEMENT DRAWING

DRAWING No. VP-SP2021-ON-MA-108-P501-0001 | SHEET No. 1 OF 1 | REV. 4