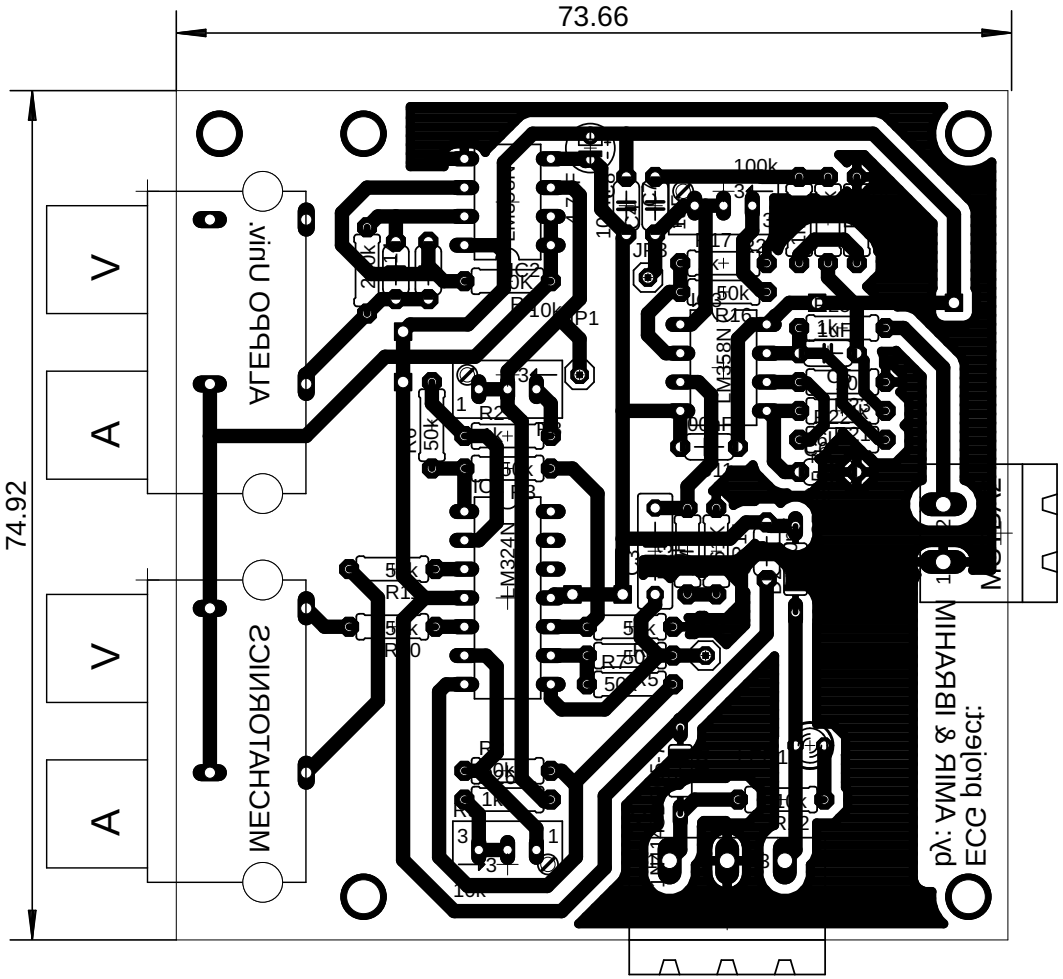
73.66
74.92
A
A
A
V
V
V
ALEPPO Univ.
MECHATRONICS
MIHAYAR & IBRAHIM
ECG project:
LM324N
LM358N
P1
R2
R7
R10
R11
R15
R16
JP3
100k
50k
10k
1kF
1nF
C1
C2