Why RL for Industrial Process Control?

Motivation

- Industrial MPC is often built from linear identified models; performance can degrade when nonlinear dynamics, coupling, or operating conditions change.
- RL can adapt online from closed-loop data, but unrestricted exploration is not acceptable for industrial plants.

Why MPC alone is not enough?

- Linear MPC is practical, interpretable, and widely used.
- A fixed linear model can lose accuracy across nonlinear operating regions.
- Reidentification and retuning are expensive when plant behavior drifts.
- This motivates controllers that adapt without discarding MPC.

RL learns from interaction

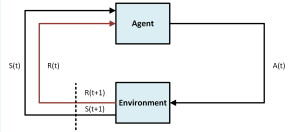

- RL improves through repeated plant interaction.
- Naive online training requires extensive exploration.
- This can cause unsafe moves and product-quality excursions.

Practical RL control approaches

- **Pretraining:** initialize RL from MPC behavior before deployment.
- **RL-assisted MPC:** let RL tune MPC variables instead of directly controlling the plant.
- **Safe RL:** filter or replace unsafe RL actions using model-based checks.

Keep MPC in the loop

Pretrained RL (Published in I&EC Research)

MPC pretraining and online refinement

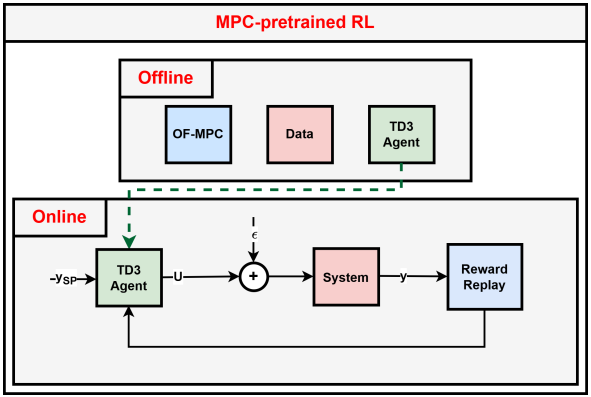

Previous approach limitation

- Previous work used the MPC one-step quadratic reward during online training.
- That reward reduced unsafe exploration, but still left significant steady-state error.

Modifications

- Offline TD3 initialization imitates offset-free MPC trajectories.
- Online reward adds offset-aware shaping near the setpoint.
- Mixed replay balances priority, recent data, and broad coverage.

Our approach = MPC imitation + offset-aware online TD3 + mixed replay

Same practical starting point as MPC-pretrained RL, but with stronger learning signal for near offset-free behavior.

Pretrained RL Results: Polymer Reactor and Aspen Dynamics C_2 Splitter

Industrial C_2 implementation

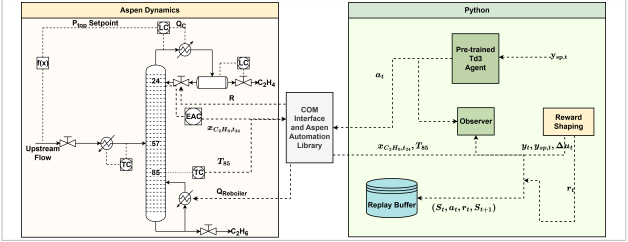

Polymer reactor: final offset reduction

	Nominal		Oper. changes	
Output	SP(a)	SP(b)	SP(a)	SP(b)
η	**98%**	**90%**	**92%**	**76%**
T	**92%**	**84%**	**84%**	**90%**

C_2 splitter: final offset reduction

	Nom.		Fluct.		Ramp	
Output	SP1	SP2	SP1	SP2	SP1	SP2
x_{24}	**99.2**	**99.6**	**99.2**	**89.7**	**94.9**	**91.1**
T_{85}	**81.3**	**90.9**	**91.6**	**60.9**	**35.8**	**97.8**

Last evaluation episodes: C_2 splitter comparisons

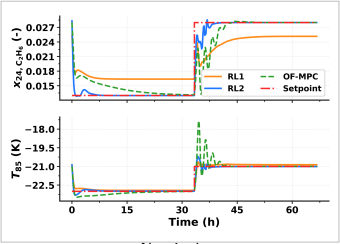

Nominal

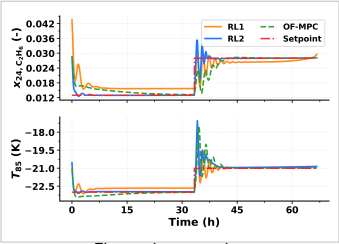

Fluctuating operation

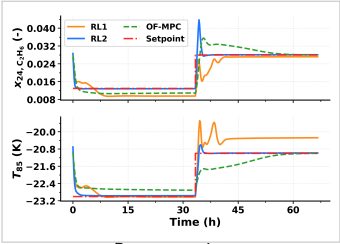

Ramp operation

RL-Assisted MPC

Main idea

- RL assists the existing controller instead of replacing it.
- MPC still solves the constrained control problem; RL tunes selected MPC design variables.

RL-assisted MPC architecture

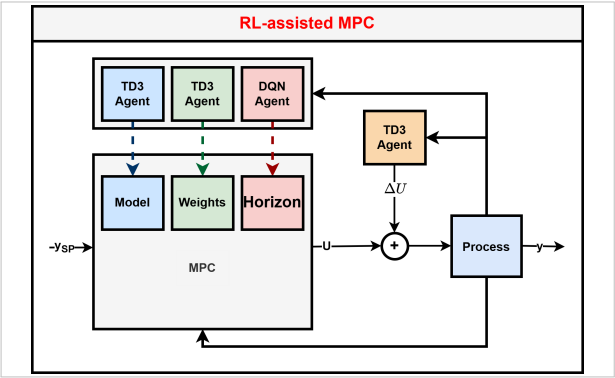

Case studies

- Polymer CSTR.
- Aspen Dynamics C_2 splitter.

Same controller idea

RL assists MPC rather than replacing it.
MPC remains the constrained optimizer.

Project 2: RL-Assisted MPC Results

Polymer combined supervisor vs nominal MPC

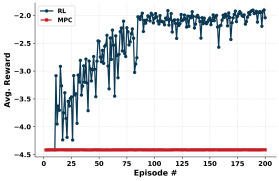

Reward comparison, combined run.

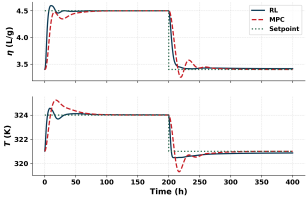

Latest evaluation episode output comparison.

Successful reward gains vs nominal MPC

Polymer

Method	Full	Eval. ep.
Scalar matrix	+0.5175	+0.8781
Structured matrix	+0.4489	+0.8870
Residual TD3	+0.4400	+0.6912
Weights TD3	+1.5725	+1.7743
Horizon DQN	+1.5217	+1.5827
Dueling DQN	+1.5129	+1.8686
Combined	**+1.8891**	**+2.3761**

Combined win rate: 98.0%.

C_2 splitter

Method	Full	Eval. ep.
Dueling DQN	+2.1918	+2.8352
Weights SAC	+1.9945	+0.3096

Only successful full-run distillation results shown.

Project 3: Lyapunov-Filtered Safe RL

Safe deployment idea

- TD3 can propose high-performance control moves, but a model-based safety layer decides what reaches the plant.
- If the RL move violates bounds or a Lyapunov contraction check, the supervisor falls back to MPC.

Safe RL architecture

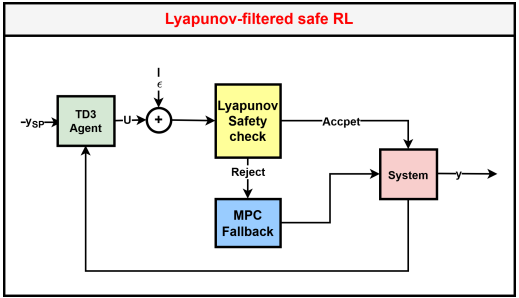

Safety stack

- Target selector computes admissible local steady targets.
- TD3 proposes a candidate action in deviation coordinates.
- Lyapunov filter checks bounds, move limits, and contraction.
- MPC fallback supplies the applied input when RL is rejected.

Result space

Polymer completed

RL actions certified online with MPC fallback

C_2 splitter extension in progress