Why RL for Industrial Process Control?

Motivation

- Industrial MPC is often built from linear identified models; performance can degrade when nonlinear dynamics, coupling, or operating conditions change.
- RL can adapt online from closed-loop data, but unrestricted exploration is not acceptable for industrial plants.

Why MPC alone is not enough?

- Linear MPC is practical, interpretable, and widely used.
- A fixed linear model can lose accuracy across nonlinear operating regions.
- Reidentification and retuning are expensive when plant behavior drifts.
- This motivates controllers that adapt without discarding MPC.

RL learns from interaction

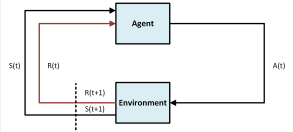

- RL improves through repeated plant interaction.
- Naive online training requires extensive exploration.
- This can cause unsafe moves and product-quality excursions.

Practical RL control approaches

- **Pretraining:** initialize RL from MPC behavior before deployment.
- **RL-assisted MPC:** let RL tune MPC variables instead of directly controlling the plant.
- **Safe RL:** filter or replace unsafe RL actions using model-based checks.

Keep MPC in the loop

Pretrained RL (Published in I&EC Research)

MPC pretraining and online refinement

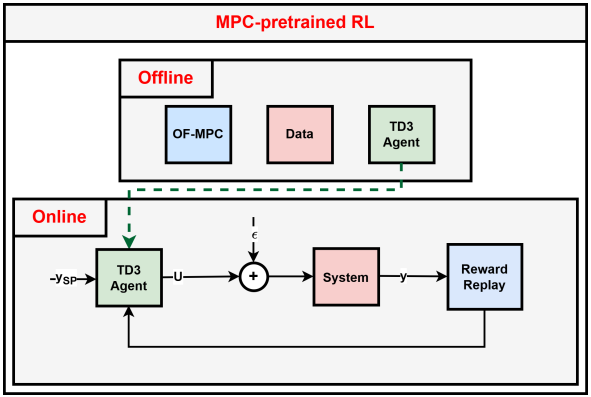

Previous approach limitation

- Previous work used the MPC one-step quadratic reward during online training.
- That reward reduced unsafe exploration, but still left significant steady-state error.

Modifications

- Offline TD3 initialization imitates offset-free MPC trajectories.
- Online reward adds offset-aware shaping near the setpoint.
- Mixed replay balances priority, recent data, and broad coverage.

Our approach = MPC imitation + offset-aware online TD3 + mixed replay

Same practical starting point as MPC-pretrained RL, but with stronger learning signal for near offset-free behavior.

Pretrained RL Results: Polymer Reactor and Aspen Dynamics C_2 Splitter

Industrial C_2 implementation

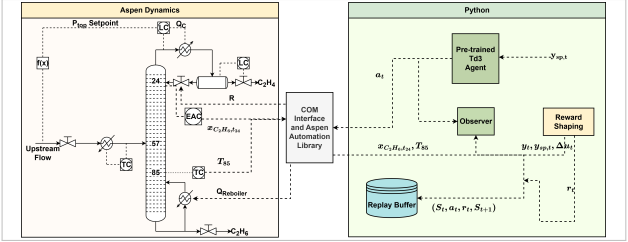

Polymer reactor: final offset reduction

	Nominal		Oper. changes	
Output	SP(a)	SP(b)	SP(a)	SP(b)
η	**98%**	**90%**	**92%**	**76%**
T	**92%**	**84%**	**84%**	**90%**

C_2 splitter: final offset reduction

	Nom.		Fluct.		Ramp	
Output	SP1	SP2	SP1	SP2	SP1	SP2
x_{24}	**99.2**	**99.6**	**99.2**	**89.7**	**94.9**	**91.1**
T_{85}	**81.3**	**90.9**	**91.6**	**60.9**	**35.8**	**97.8**

Last evaluation episodes: C_2 splitter comparisons

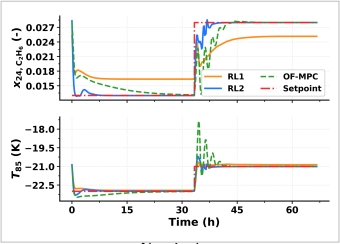

Nominal

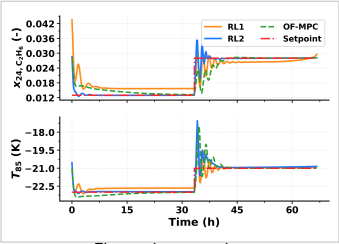

Fluctuating operation

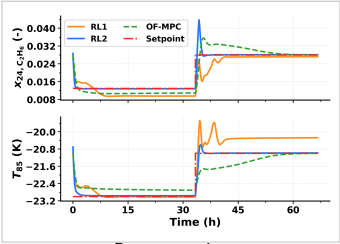

Ramp operation

Project 2: RL-Assisted MPC Concept

Main idea

- RL assists the existing controller instead of replacing it.
- MPC still solves the constrained control problem; RL tunes selected MPC design variables.

RL-assisted MPC architecture

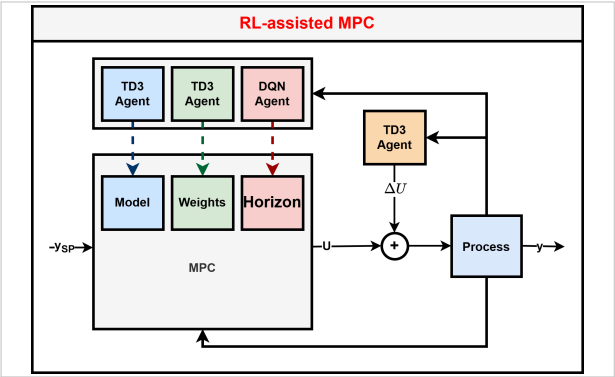

What RL is allowed to change

- Prediction-model multipliers.
- Input residual corrections.
- Tracking and move-suppression weights.
- Prediction/control horizons.
- Combined supervision across several MPC knobs.

Polymer result

Combined supervisor beats MPC

full-run reward $\Delta = +1.6957$

tail reward $\Delta = +2.1701$, 100% wins

C_2 splitter

Closed-loop performance has also improved; final comparison remains work in progress.

Project 2: RL Assistance Variants Around the Same MPC Layer

Model adaptation

Scalar matrix multiplier

- Global A multiplier.
- Input-column B multipliers.

Structured matrix multiplier

- Block, band, or coordinate-wise model correction.
- Useful when mismatch is not uniform.

Polymer reward gain vs MPC

Method	Full	Tail
Scalar matrix	+0.5175	+0.7758
Structured matrix	+0.4489	+0.7414

Controller tuning

Weight tuning

- RL adjusts tracking and input-move penalties.
- Changes aggressiveness without changing the model.

Horizon tuning

- Discrete prediction/control horizon choices.
- DQN-style supervisor for fi-

Polymer reward gain vs MPC

Method	Full	Tail
Weights TD3	+1.5725	+1.7743
Horizon DQN	+1.5217	+1.6782
Dueling DQN	+1.5129	+1.6813

Residual and combined assistance

Residual correction

- MPC proposes the main move.
- RL adds a bounded correction.

Combined supervisor

- Several agents specialize in different MPC knobs.
- Long-term direction: adaptive but interpretable MPC.

Polymer reward gain vs MPC

Method	Full	Tail
Residual TD3	+0.4400	+0.6934
Combined	+1.6957	+2.1701

Combined tail win rate: 100%.

Project 3: Lyapunov-Filtered Safe RL

Safe deployment idea

- TD3 can propose high-performance control moves, but a model-based safety layer decides what reaches the plant.
- If the RL move violates bounds or a Lyapunov contraction check, the supervisor falls back to MPC.

Safe RL architecture

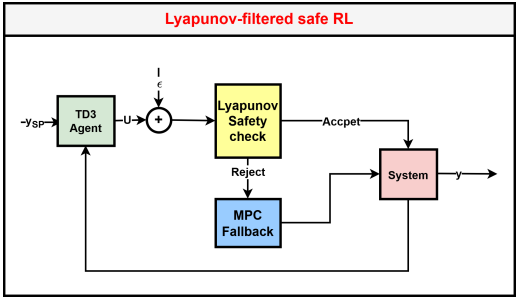

Safety stack

- Target selector computes admissible local steady targets.
- TD3 proposes a candidate action in deviation coordinates.
- Lyapunov filter checks bounds, move limits, and contraction.
- MPC fallback supplies the applied input when RL is rejected.

Result space

Polymer completed

RL actions certified online with MPC fallback

C_2 splitter extension in progress