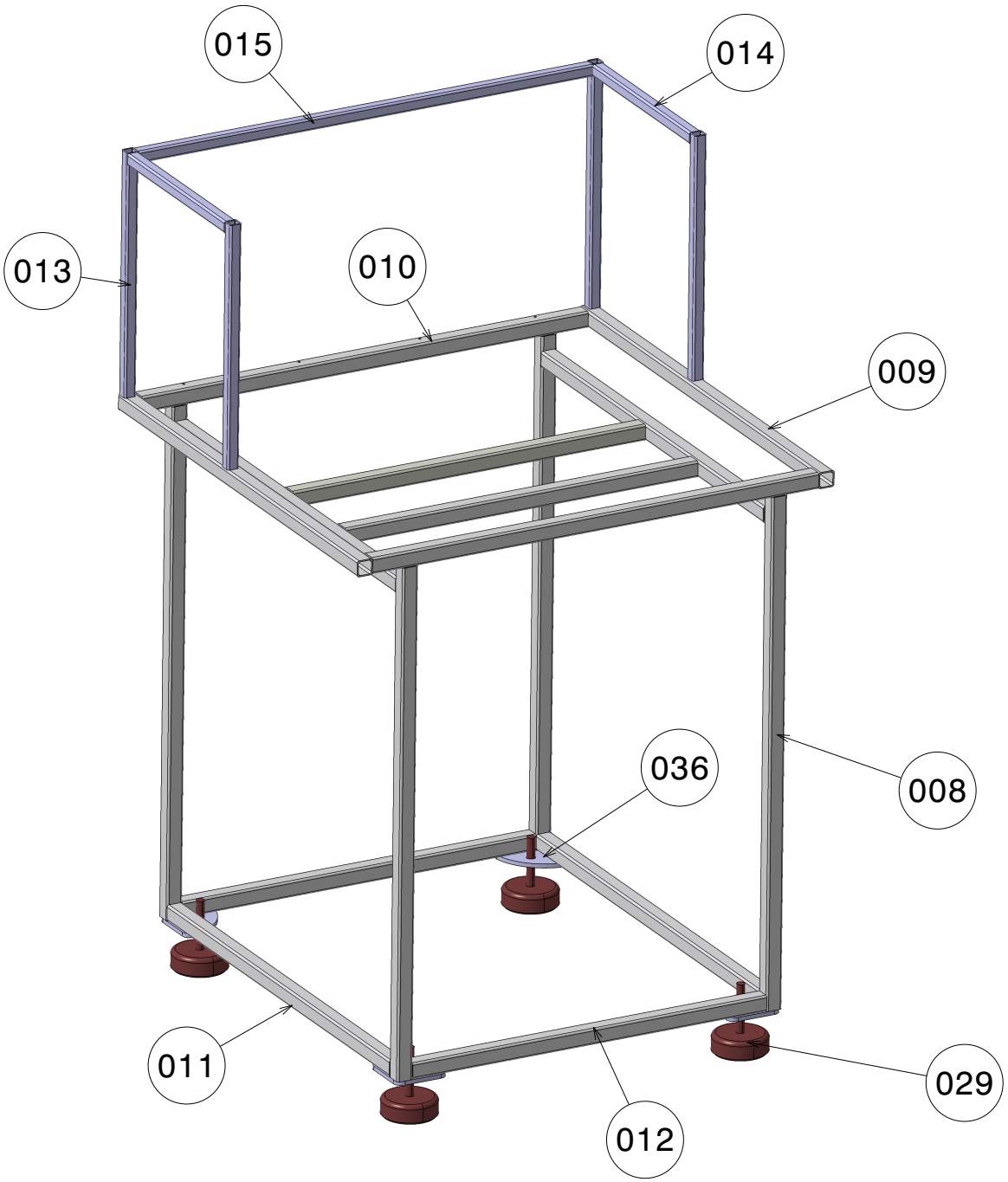

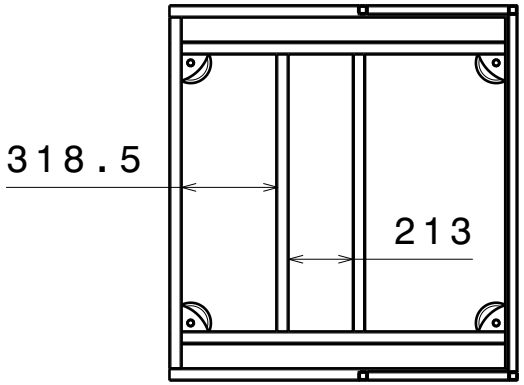

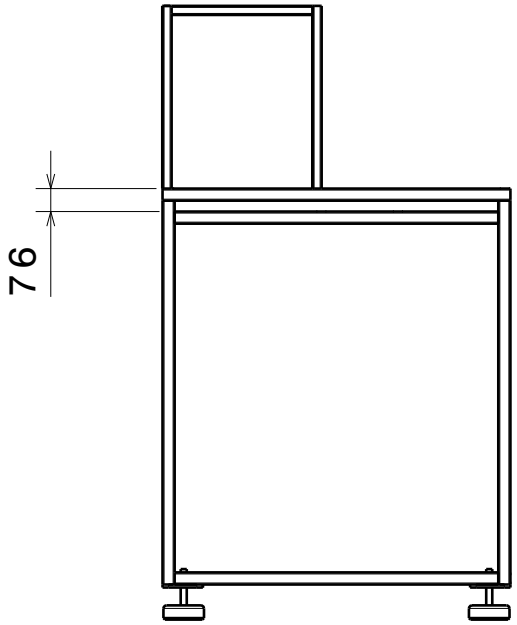

	NAME	DATE
DRAWN	SSP	
CHECKED BY		
APPROVED BY		
DRAWING NAME		
DRAWING NUMBER		REV:
MATERIAL		
WEIGHT		
VOLUME		

VIRA SANAT

TEL : +98 21 22583866
E-MAIL : info@virasanaat.com
www.VIRASANAAT.com

SCALE: SIZE: PAGE: