PAKISTAN NAVY ENGINEERING COLLEGE, NATIONAL UNIVERSITY OF SCIENCES AND TECHNOLOGY, KARACHI
PNEC NUST

DIGITAL LOGIC DESIGN (DLD) COMPLEX ENGINEERING PROBLEM

Name: Mohammad Amir Rehman, Abdul Ghani Qureshi, Arham Jaffer, Jeetash Goswami, Hasnain Sheikh
CMS-ID: EE-1637, EE-1676, EE-1649, EE-1657, EE-1650
Class: EE
Section: B2
Batch: 2027
Semester: 3
Department: Electrical Engineering
Instructor: Sir Najeeb

EE UG Revised Curricula 2020
DEPARTMENT OF ELECTRONICS & POWER ENGINEERING

Objective

The objective of this project is to design and implement a 2-digit digital counter capable of counting from 00 to 99. This circuit utilizes two 7490 BCD counters, two 7447 decoder ICs, two 7-segment displays, and a push-button switch. The counter increments with each button press and resets upon reaching 99.

Components and Their Functions

7490 IC – Binary Coded Decimal Counter

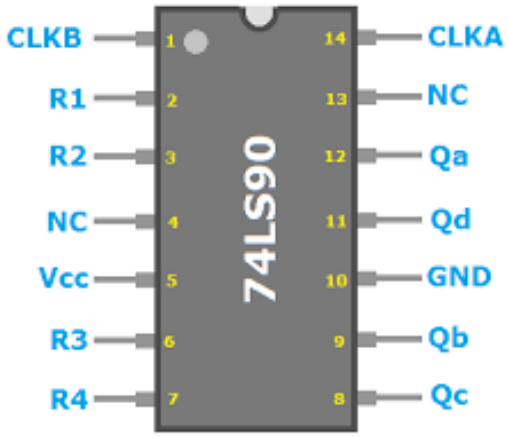

IC 7490 Pin Diagram

Count	Qd	Qc	Qb	Qa
(Start) 0	0	0	0	0
1	0	0	0	1
2	0	0	1	0
3	0	0	1	1
4	0	1	0	0
5	0	1	0	1
6	0	1	1	0
7	0	1	1	1
8	1	0	0	0
9	1	0	0	1
(New Cycle) 10	0	0	0	0

- The 7490 is a decade counter IC designed to produce a 4-bit binary-coded decimal (BCD) output.
- It cycles through ten states, representing numbers 0 to 9 in binary (0000 to 1001).
- After reaching 9, it automatically resets to 0 and continues counting.
- The IC is flexible and can be cascaded with additional 7490 counters to count higher numbers, such as in multi-digit systems.
- Reset and set pins allow for customization of the counting sequence.

7447 IC – BCD to 7-Segment Display Decoder

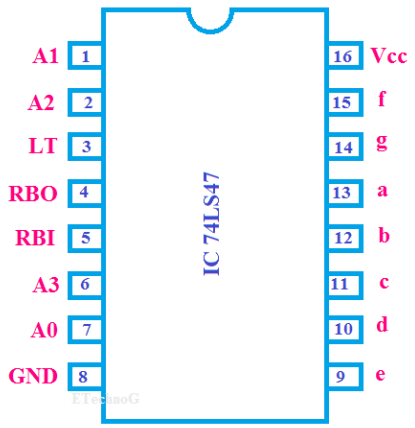

S	BCD	G	F	E	D	C	B	A
0	0000	0	1	1	1	1	1	1
1	0001	0	0	0	0	1	1	0
2	0010	1	0	1	1	0	1	1
3	0011	1	0	0	1	1	1	1
4	0100	1	1	0	0	1	1	0
5	0101	1	1	0	1	1	0	1
6	0110	1	1	1	1	1	0	1
7	0111	0	0	0	0	1	1	1
8	1000	1	1	1	1	1	1	1
9	1001	1	1	0	1	1	1	1

- The 7447 decoder translates the 4-bit BCD output of the 7490 into control signals for the 7-segment display.
- It is designed specifically for common-anode 7-segment displays, using active LOW outputs to illuminate LED segments.
- Additional inputs like Lamp Test (LT) allow testing all segments simultaneously, while Blanking Input (BI) clears the display if required.
- Compatible with different display types depending on the configuration (7448 for common-cathode displays).

7-Segment Displays

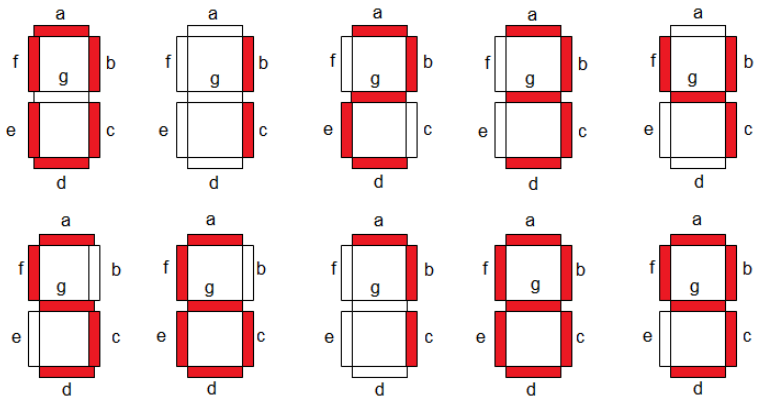

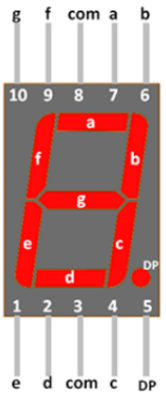

- Each display consists of seven LEDs arranged to form the digits 0 through 9.
- The project employs common-anode displays, where all anode connections are shared.
- Current-limiting resistors are added in series with each segment to prevent damage and ensure consistent brightness.
- Resistors are chosen to limit current to 12-20 mA, optimizing brightness and protecting the LEDs.

Push-Button Switch

- The push-button switch acts as a clock pulse generator for the 7490 counters.
- Each press sends an electrical pulse that advances the count by one.
- By changing the position of the switch and its associated resistor, the count can be made to change on the button press or release.

Circuit Functionality

This circuit begins at "00" and increments the count with each press of the push-button switch. The first 7490 counter is responsible for the units place, while the second handles the tens. The output of each 7490 is decoded by a 7447 IC, which drives the corresponding 7-segment display. Current-limiting resistors ensure consistent brightness for the LEDs, irrespective of the number of illuminated segments.

The circuit is expandable by cascading additional 7490 counters and displays, allowing for higher counts. This can be done by connecting the carry output of one counter to the clock input of the next. For example, adding a third 7490 would create a 3-digit counter capable of counting from 000 to 999.

Simulation

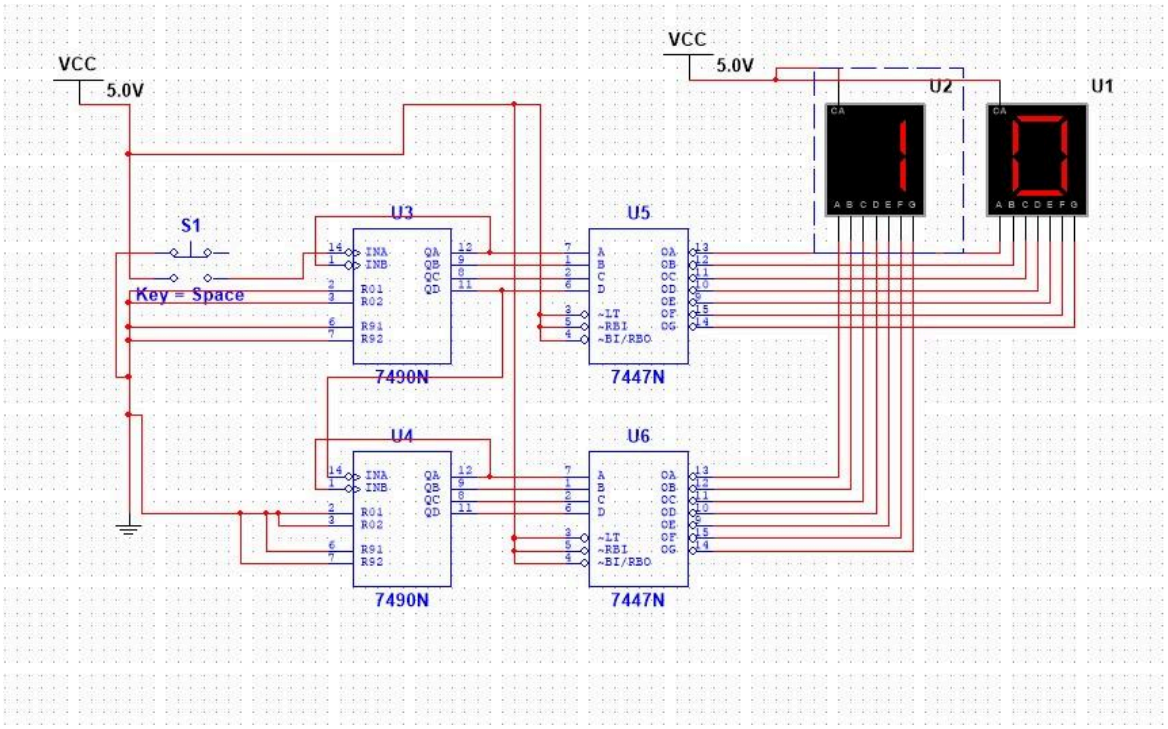

Hardware Design

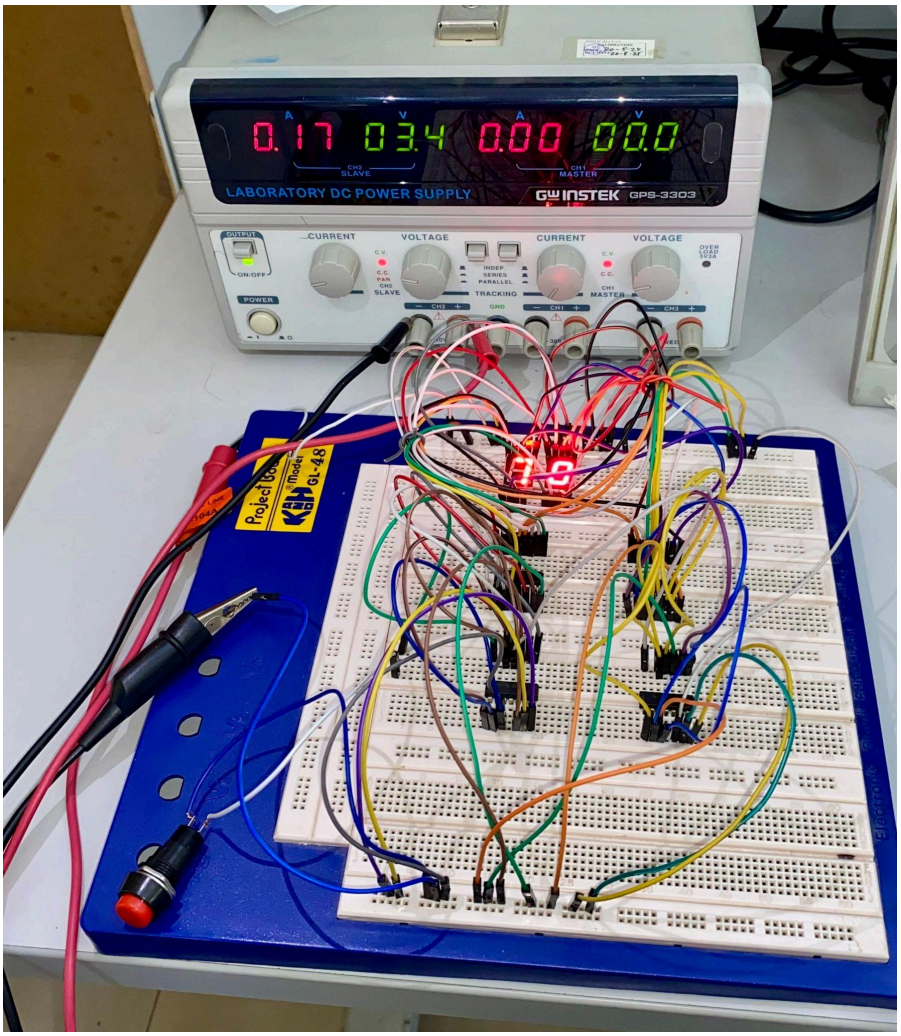

Conclusion

This project demonstrates the construction of a simple yet effective 2-digit digital counter. By using 7490 counters, 7447 decoders, and 7-segment displays, the circuit provides a clear visual representation of the count. The modular design makes it easy to expand and adapt for various applications, showcasing the utility of these components in digital electronics.