Table 3.2. Control Head Displays, Pots, and Pushbuttons.

	Port B 4-Bit Addresses																	
	0		1		2		3		4		5		6		7		8	
	0000		0001		0010		0011		0100		0101		0110		0111		1000	
Port A 8-bit data bus	Write	Read	Write	Read	Write	Read	Write	Read	Write	Read	Write	Read	Write	Read	Write	Read	Write	Read
	Digit 0	Bass-Pot	Digit 1	Mid	Digit 2	Cross-over	LEDs	Treble Decay	LEDs	Depth	LEDs	Pre-Delay	LEDs	Push-button	LEDs	Push-button		Push-button
PA0	SEG a	LSB	SEG a	LSB	SEG a	LSB	PROG 1	LSB	IMED	LSB	SEC	LSB	L 0dB	PROG 1	R 0dB	IMED	---	BASS
PA1	SEG b		SEG b		SEG b		PROG 2		SET		MS		L 6dB	PROG 2	R 6dB	SET	---	MID
PA2	SEG c		SEG c		SEG c		PROG 3		CALL		Hz		L 12dB	PROG 3	R 12dB	CALL	---	CROSS-OVER
PA3	SEG d		SEG d		SEG d		PROG 4		SHIFT		kHz		L 18dB	PROG 4	R 18dB	SHIFT	---	TREBLE
PA4	SEG e		SEG e		SEG e		PROG 5		REG A		OVFL		L 24dB	PROG 5	R 24dB	REG A	---	DEPTH
PA5	SEG f		SEG f		SEG f		PROG 6		REG B		---		BASS-POT	PROG 6	TREBLE DECAY	REG B	---	PRE-DELAY
PA6	SEG g		SEG g		SEG g		PROG 7		REG C		---		MID POT	PROG 7	DEPTH	REG C	---	---
PA7	DP	MSB	DP	MSB	DP	MSB	PROG 8	MSB	REG D	MSB	---	MSB	CROSS-OVER	PROG 8	PRE-DELAY	REG D	---	---

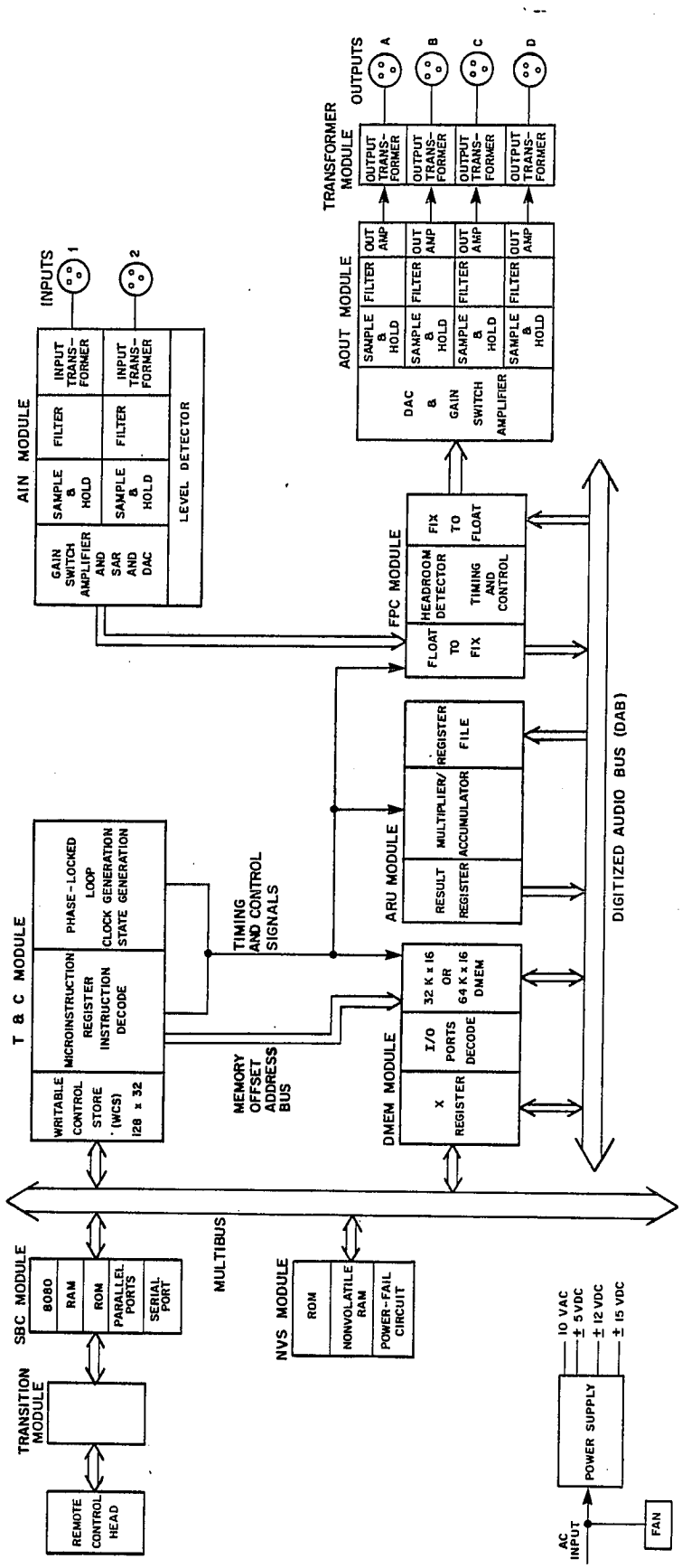

Fig. 3.1. Detailed Block Diagram -- 224X.

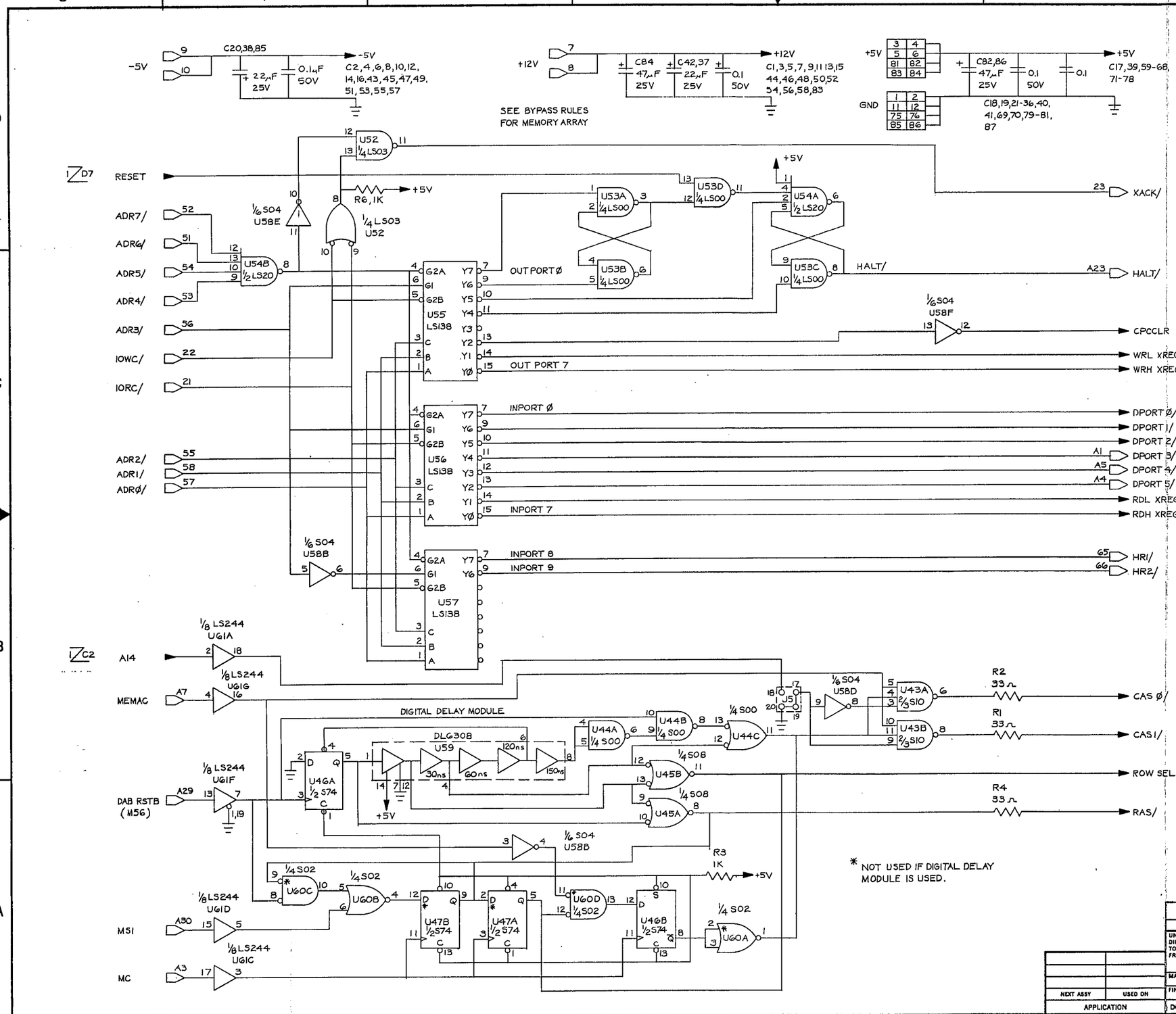

REVISIONS			
REV.	DESCRIPTION	DATE	APPROVED
2	REDRAWN	4·19·82	
3	CHANGED JUMPER J5 PER ECO # 830126-00	5/1/85	5/7/85

QTY REQD	CODE IDENT	PART OR IDENTIFYING NO	NOMENCLATURE OR DESCRIPTION	MATERIAL SPECIFICATION

PARTS LIST

UNLESS OTHERWISE SPECIFIED DIMENSIONS ARE IN INCHES TOLERANCES ARE: FRACTIONS DECIMALS ANGLES .XX .XXX

MATERIAL

FINISH

DO NOT SCALE DRAWING

NEXT ASSY	USED ON
APPLICATION	

CONTRACT NO.

APPROVALS	DATE
DRAWN JCR	4·21·82
CHECKED MH	4/26/82
ISSUED CB	4/26/82

lexicon

SCHEMATIC, DATA MEMORY AND I/O MODEL 224X

SIZE D | FSCM NO. | DWG. NO. 060-02512 | REV. 3

SCALE NA | SHEET 2 OF 2

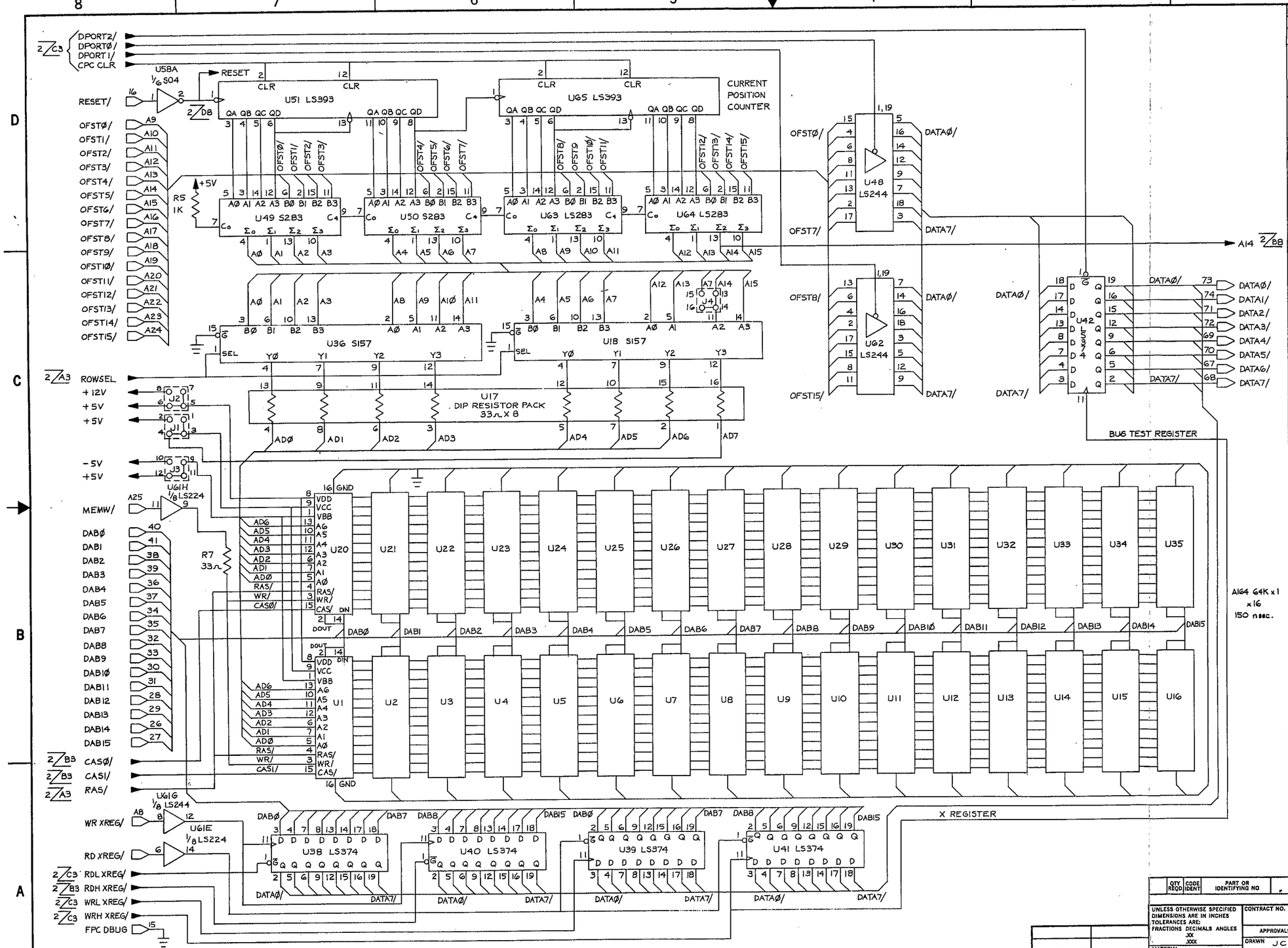

REVISIONS			
REV.	DESCRIPTION	DATE	APPROVED
2	REDRAWN	4-19-82	
3	CHANGED JUMPERS J1-J4 PER ECO # 830126-00 AND ADDED DOCUMENT CONTROL BLOCK	5/1/85	J. Custer 5/7/85

NOTES

1. RESISTORS ARE IN OHMS.
2. CAPACITORS ARE IN μF UNLESS OTHERWISE INDICATED.
3. ICS 1-16 ARE IDENTICAL, ICS 20-35 ARE IDENTICAL.
4. ON BOARD CONNECTIONS
   ——► TO ►—— FROM
5. DIGITAL GND
6. 1/A1 DENOTES SHEET NO. AND INTERSECT COORDINATE.

DOCUMENT CONTROL BLOCK	
SHEET	REVISION
1 OF 2	3
2 OF 2	3

QTY REQD	CODE IDENT	PART OR IDENTIFYING NO	NOMENCLATURE OR DESCRIPTION	MATERIAL SPECIFICATION

PARTS LIST

UNLESS OTHERWISE SPECIFIED DIMENSIONS ARE IN INCHES TOLERANCES ARE: FRACTIONS DECIMALS ANGLES .XX .XXX

MATERIAL

FINISH

DO NOT SCALE DRAWING

NEXT ASSY	USED ON
APPLICATION	

CONTRACT NO.

APPROVALS	DATE
DRAWN JCR	4-19-82
CHECKED MH	4/26/82
ISSUED CR	4/26/82

lexicon

SCHEMATIC, DATA MEMORY AND I/O
MODEL 224X

SIZE D | FSCM NO. | DWG. NO. 060-02512 | REV. 3

SCALE NA | SHEET 1 OF 2

REV. 3 9-10-81 ADD 224-H INFO. AMG/

REV. 4 10-18-84 UPDATED 224X IC INFO TO PARTS LIST & DWG. R.J. 10/10/84

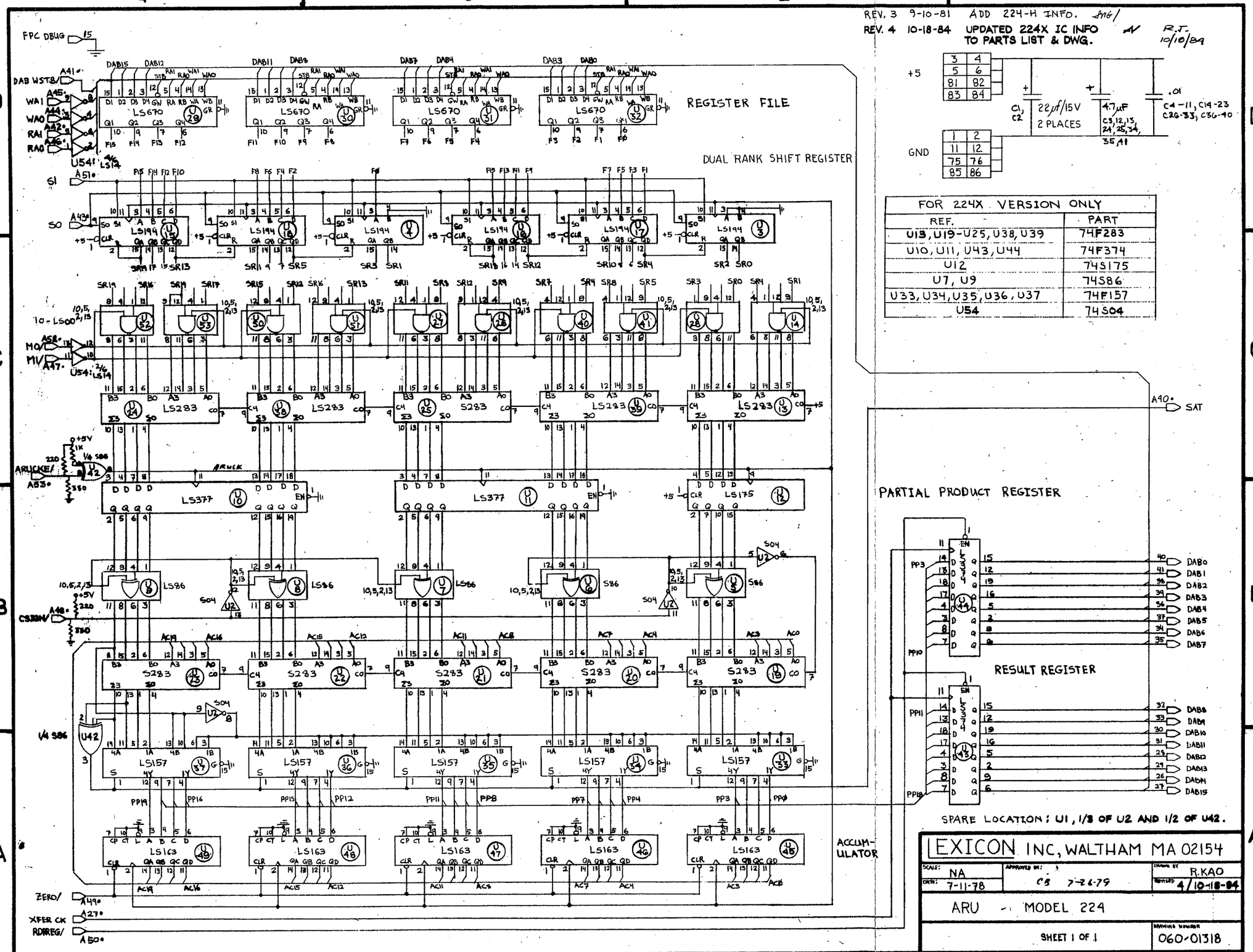

FOR 224X VERSION ONLY	
REF.	PART
U13, U19-U25, U38, U39	74F283
U10, U11, U43, U44	74F374
U12	74S175
U7, U9	74S86
U33, U34, U35, U36, U37	74F157
U54	74S04

LEXICON INC, WALTHAM MA 02154

SCALE: NA	APPROVED BY: CB 7-26-79	DRAWN BY R.KAO
DATE: 7-11-78		REVISED 4/10-18-84
ARU - MODEL 224		
SHEET 1 OF 1		DRAWING NUMBER 060-01318

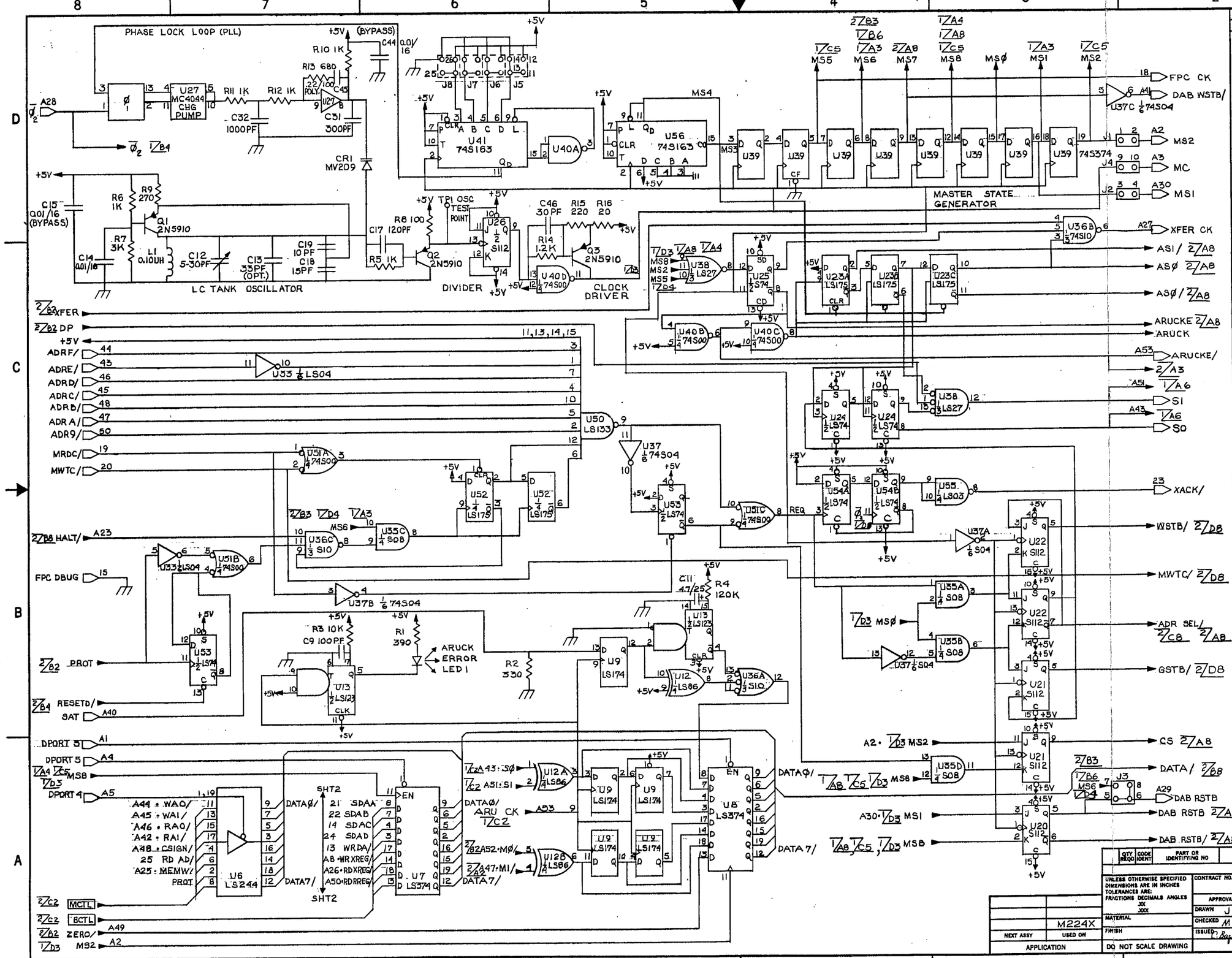

REVISIONS

REV.	DESCRIPTION	DATE	APPROVED
1	REDRAWN JB	4-16-82	

NOTES

1. UNLESS OTHERWISE NOTED, ALL RESISTORS ARE IN OHMS.
2. UNLESS OTHERWISE NOTED, ALL CAPACITORS IN UF/V.
3. CHASIS GROUND / DIGITAL GROUND
4. DENOTES SHEET NUMBER AND INTERSECT COORDINATE
5. ON BOARD CONNECTION - TO / ON BOARD CONNECTION - FROM
6. HIGHEST REFERENCE DESIGNATION: R16 ; C63 ; U56 ;

QTY REQD	CODE IDENT	PART OR IDENTIFYING NO	NOMENCLATURE OR DESCRIPTION	MATERIAL SPECIFICATION

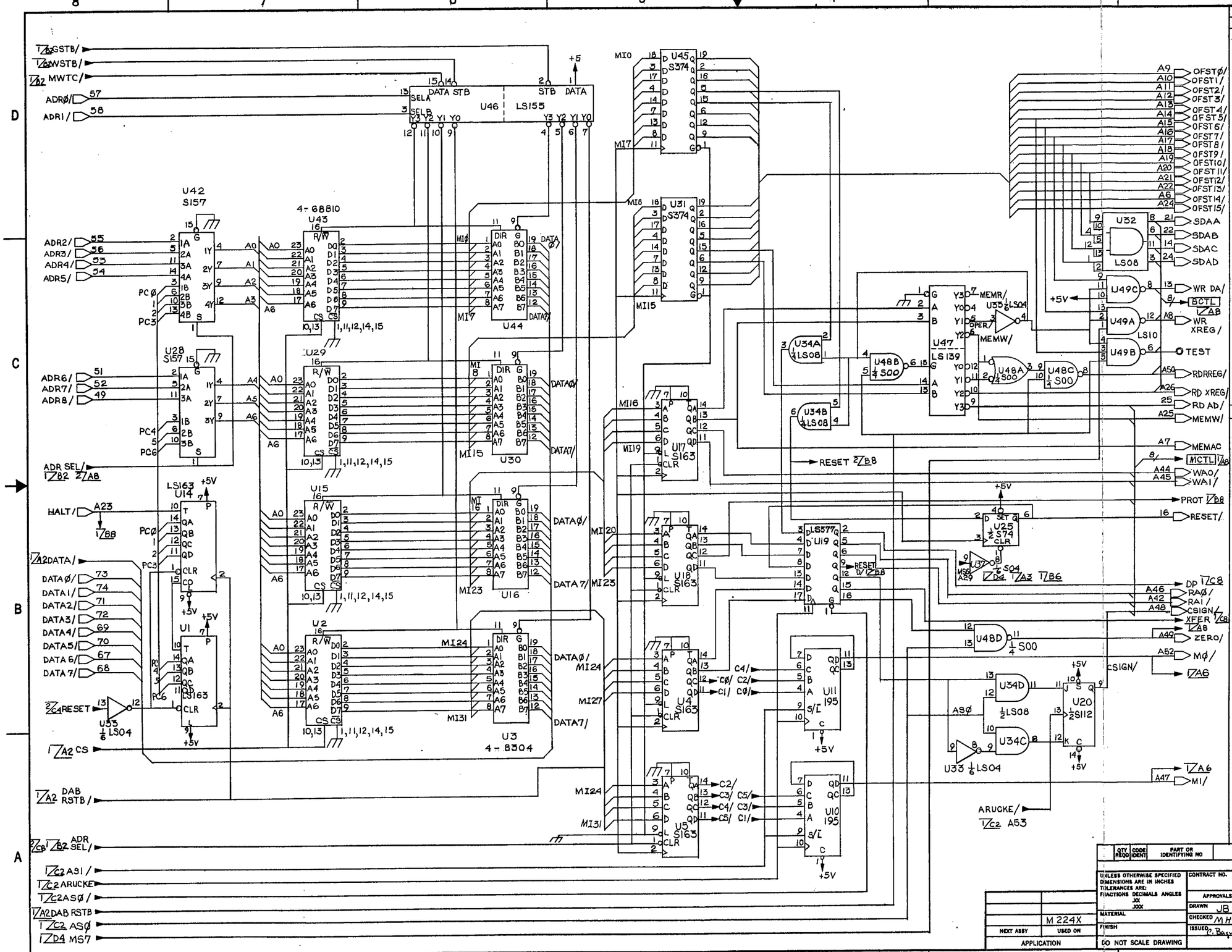

REV.	DESCRIPTION	DATE	APPROVED
1	REDRAW JB	5-4-82	

NOTES

QTY REQD	CODE IDENT	PART OR IDENTIFYING NO	NOMENCLATURE OR DESCRIPTION	MATERIAL SPECIFICATION

PARTS LIST

UNLESS OTHERWISE SPECIFIED DIMENSIONS ARE IN INCHES TOLERANCES ARE: FRACTIONS DECIMALS ANGLES .XX .XXX

MATERIAL

FINISH

DO NOT SCALE DRAWING

NEXT ASSY	USED ON
	M 224X

APPLICATION

CONTRACT NO.

APPROVALS	DATE
DRAWN JB	5-4-82
CHECKED MH	5/11/82
ISSUED R. Baynard	5/18/82

lexicon

SCHEMATIC, MODEL 224X, TIMING AND CONTROL (HIGH SPEED)

SIZE D | FSCM NO. | DWG. NO. 060-02475D | REV. 1

SCALE NA | SHEET 2 OF 2