Design for Test (DFT) :
Eyes and Ears inside Silicon

Shalini Pathak

Vaishnavi Mujumdaar

Agenda

- What & Why of DFT
- Typical Silicon Testing Flow
- Common Testability Structures
- Functional vs Structural testing
- Scan Testing
- Typical DFT Challenges
- Boundary Scan
- Basics of MBIST & LBIST

Any Observation?

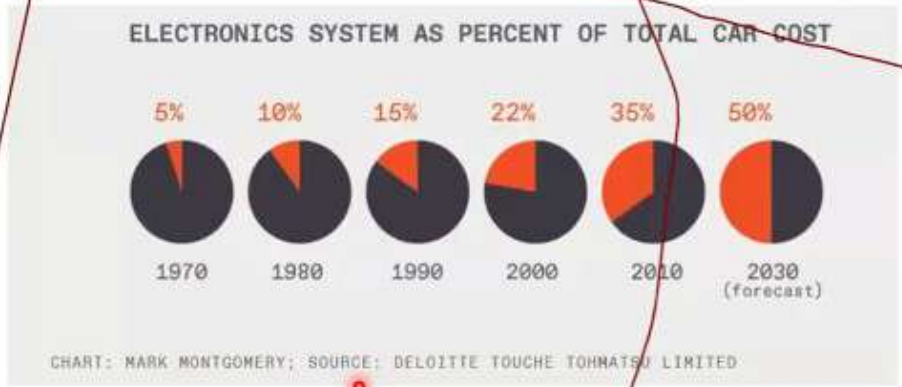

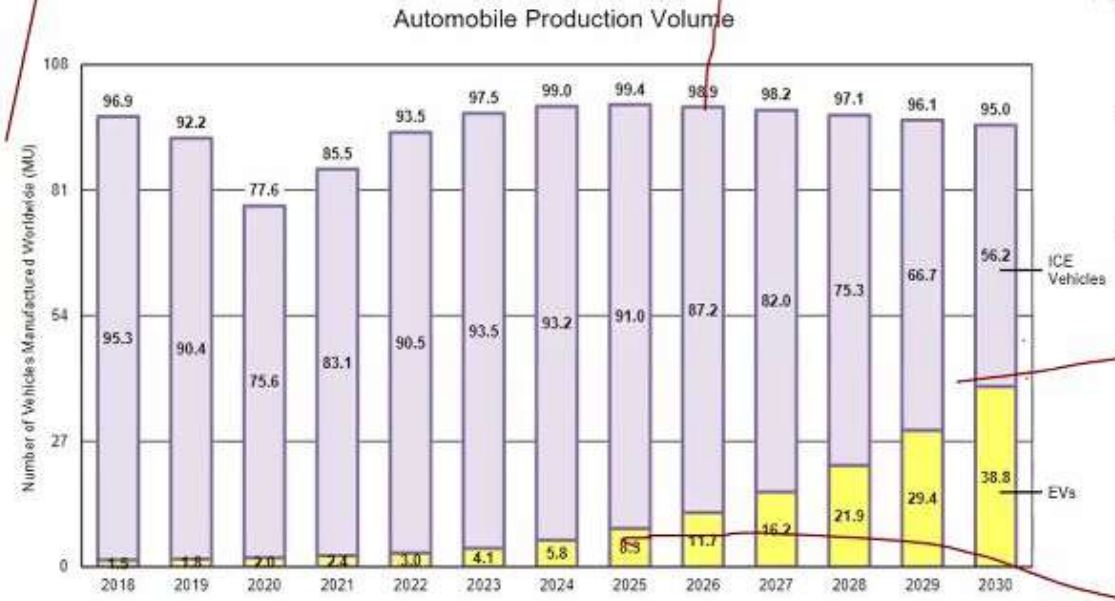

- https://spectrum.ieee.org/software-eating-car
- IBS Global Semiconductor Industry Service Report 2021
- https://spectrum.ieee.org/software-eating-car

Drivers for Design for Testability (DFT)

- Manufacturing defects are inevitable
  - **Physical Reality:** Dust particles, process variations, and lithography errors cause **shorts, opens, and bridges**.

- Complexity of modern SoCs
  - **Billions of Transistors:** In a modern SoC (with CPUs, NPUs, and GPUs), internal nodes are buried deep under layers of metal.
  - **Input/Output Bottleneck:** You cannot test a billion-gate chip using only a few hundred functional pins.

- The Economics: Reducing "Cost of Test"
  - **Tester Time = Money:** High-end Automated Test Equipment (ATE) costs thousands of dollars per hour.
  - **Speed:** Efficient patterns are required that test the chip in milliseconds rather than minutes.

- Quality & Reliability (DPPM)
  - **Defective Parts Per Million (DPPM):** Automotive and Medical industries require near-zero failure rates.
  - **The Goal: Prevent "Test Escapes"** (bad chips that look good during a simple functional test) from reaching the customer.

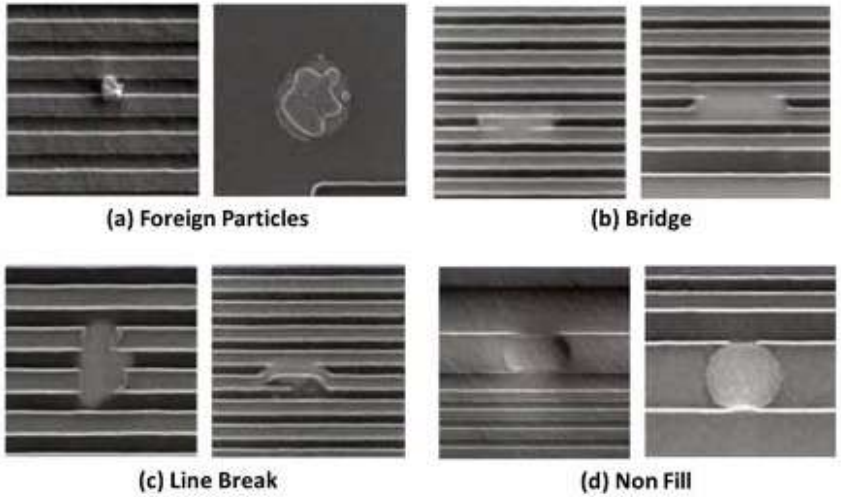

Introduction to DFT

- Specialized set of techniques used to add testability features to a hardware product design
- Easier and cost-effective method to detect a manufacturing defect and isolate it
- Ability to create a Test Program to determine the quality of a manufactured design
- Prevents from shipping bad chips to customers – Reduces DPPM (Defective parts Per Million)
- Defined by two main pillars : Controllability and Observability
  - **Controllability**
    - Ability to set an internal node to a desired logic value (0/1)
  - **Observability**
    - Ability to determine the signal value of an internal node by looking at the external output pins

Why Invest in DFT?

Ensures designs are testable by construction

Achieves long term optimization of entire hardware lifecycle

Simplifies post-silicon validation and in-field diagnostics

"The Rule of Ten" : the cost of detecting a "bad" chip increases by a **factor of ten** at each subsequent stage of the process:

Minimizes costly field returns and rework cycles

Contributes to improved yield, faster time-to-volume and more predictable product qualification

Enables inter-device testing on boards

Typical Testing Flow of Digital Circuits

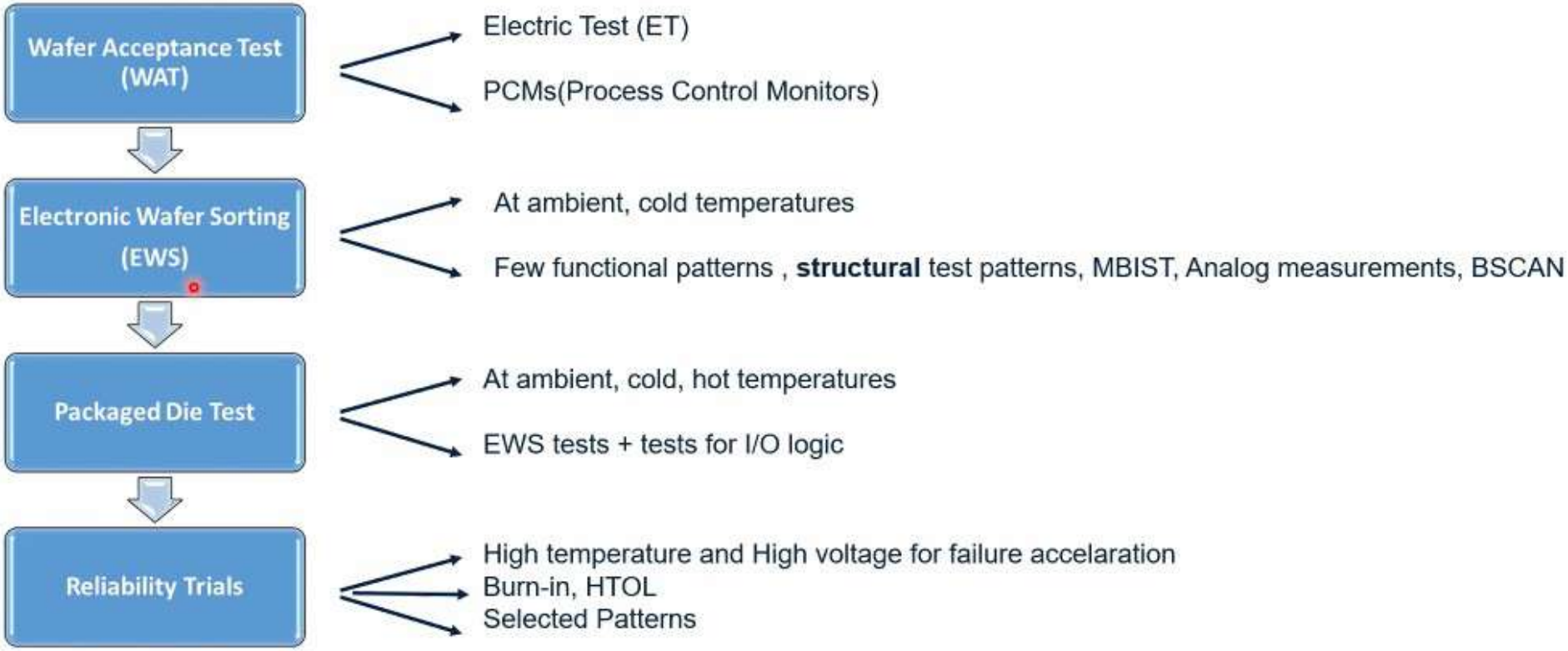

- D. Gizopoulos, "Advances in Electronic Testing: Challenges and Methodologies", Springer, 2006, Chapter 1-2.
- M.L. Bushnell, V.D. Agrawal, "Essentials of Electronic Testing for Digital, Memory and Mixed Signal VLSI Circuits", Kluwer Academic Publishers, 2000, Chapter 14
- S. Sengupta, S. Kundu, S. Chakravarty and P. Parvathala, "Defect Based Test: A Key Enabler for Successful Migration to Structural Tests", Intel Technology Journal, 1999.

Bathtub Curve for Reliability

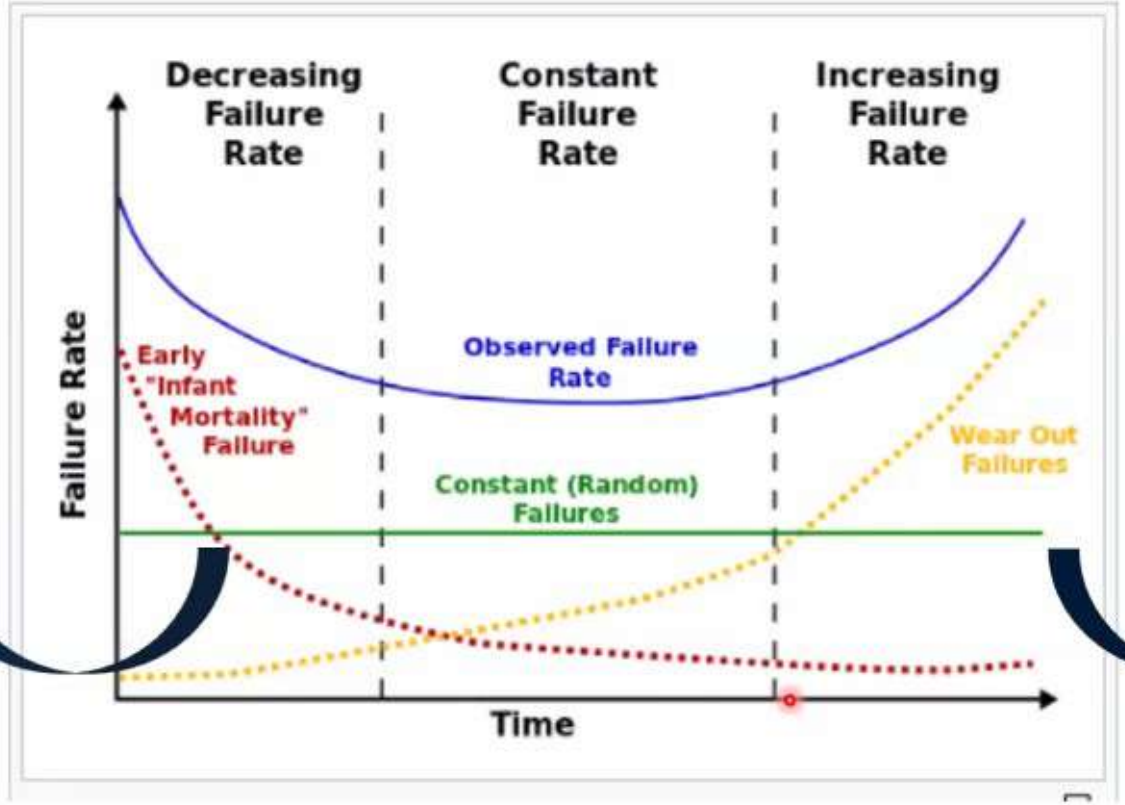

DFT : Dead on Arrival Test
BurnIn : Screening of Weak Chips

In System Test : Monitoring "Useful Life" phase

Common Testability Structures in Design

- **Scan** : Structural testing by converting normal flip-flops into scannable flip-flops (Proposed for 1-TOPS)
- **Built-in-Self-test (BIST)** : Adding "on-chip testers" for memory **(MBIST)** or logic (**LBIST**)
- **Analog IP Testing** (PLL, ADC, Clock Controllers, Temperature Sensors) : Adhoc testing methods to expose the IP pins at top level ports or Analog BIST
- **Boundary Scan Testing** (BSCAN) : To test chip to chip connectivity on board
- **PAD Testing** : Parametric tests of IO logic generally through BSCAN
- **Analog PHY Testing** (SerDes, Ethernet, HDMI, DDR) : Loopback testing by connecting the output of the transmitter back to the input of receiver

What is a Fault?

- Fault is the manifestation of a physical defect or defects
- Predicts how physical defects will alter the logical behavior of the circuit
- We don't test for defects, instead we make test patterns to look for faults

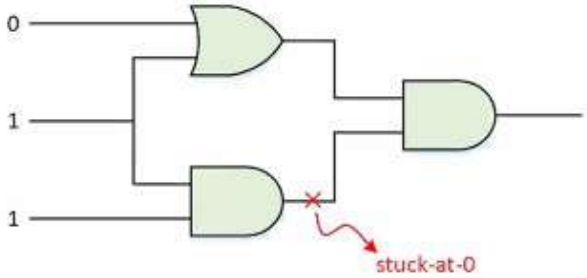

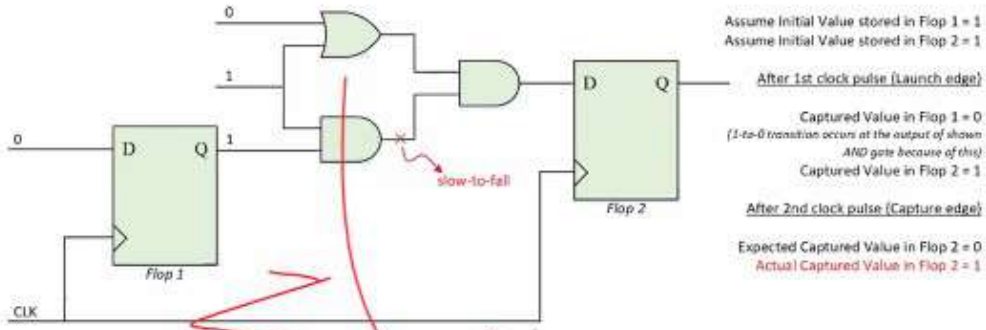

Fault Model	Description	Defects
Stuck At 0	Node acts as if connected to GND	Broken interconnect, preventing the signal from reaching gate and defaulting to GND via leakage
Stuck At 1	Node acts as if connected to VDD	A piece of metal shorts a signal line to VDD
Bridging	Models the interaction between two signals	Tiny splash of metal connecting two adjacent lines
Transition	Delay fault, circuit functions correctly at low speed but not at high speed	A partially formed via allows current to pass through but very slowly

Structural vs Functional Testing : 1

- Test combination requirements increase as number of inputs increase

Logic Gate	Symbol	Test Combinations				No. of Patterns
Inverter	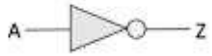	A			Z	2
		1			0	
		0			1	
2-Input AND	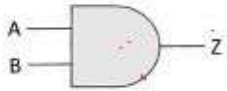	A	B		Z	4
		1	1		1	
		0	1		0	
		1	0		0	
		0	0		0	
4-Input Logic	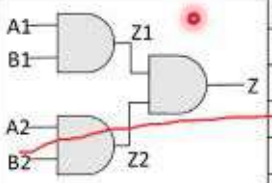	A1	B1	A2	B2	Z	16
		1	1	1	1	1	
		1	1	1	0	0	
		:	:	:	:	:	
		:	:	:	:	:	
		0	0	0	0	0	

# Inputs	# Test combinations
10	1024
20	1 Million (10^6)
40	1 Trillion (10^{12})
80	1 Septillion (10^{24})

Structural vs Functional Testing : 2

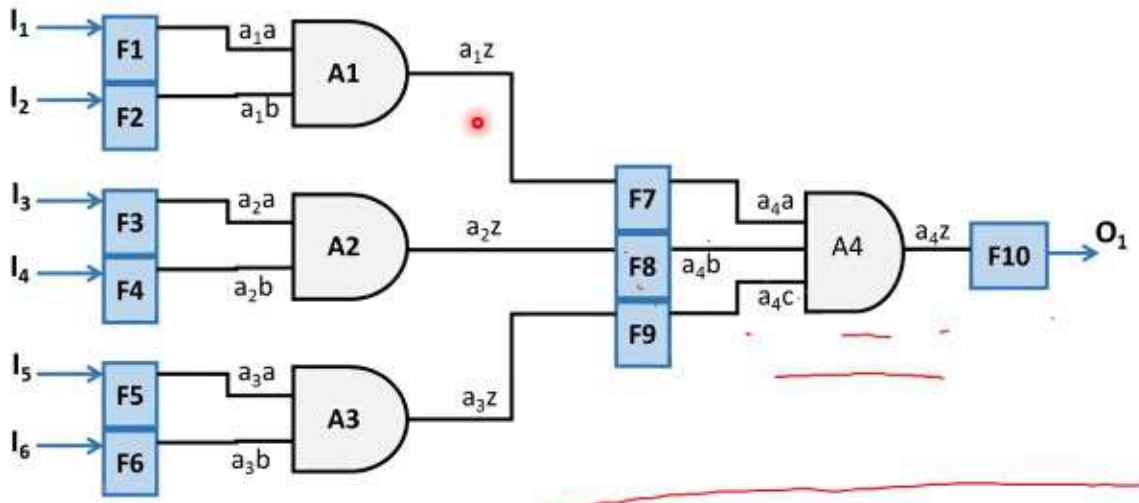

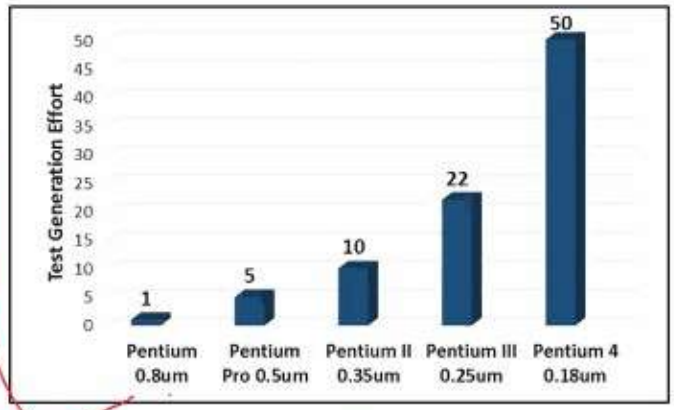

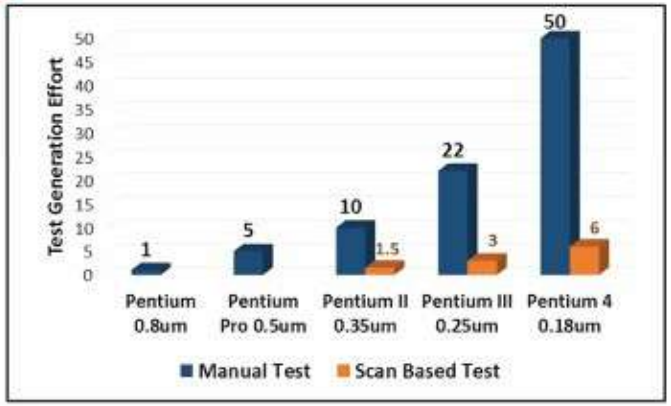

- 6 Input Logic → 64 test combinations
- Can be considered as test requirements of 4 AND gates → 20 test combinations
- Issue : Internal nodes not accessible
- Solution : **Scan Test**

M.L. Bushnell, V.D. Agrawal, "Essentials of Electronic Testing for Digital, Memory and Mixed Signal VLSI Circuits", Kluwer Academic Publishers, 2000, Chapter 14

Scan Based Testing : Basic Requirements

- Convert Flip Flop to provide additional control input via MUX

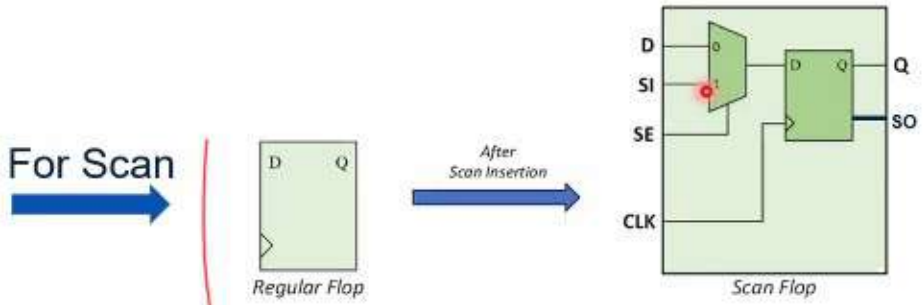

Scan Based Testing : Basic Requirements

- Convert Flip Flop to provide additional control input via MUX

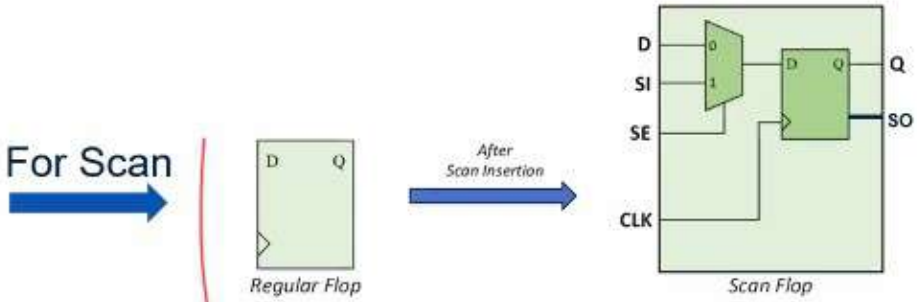

- All clocks/resets should be controllable from top level

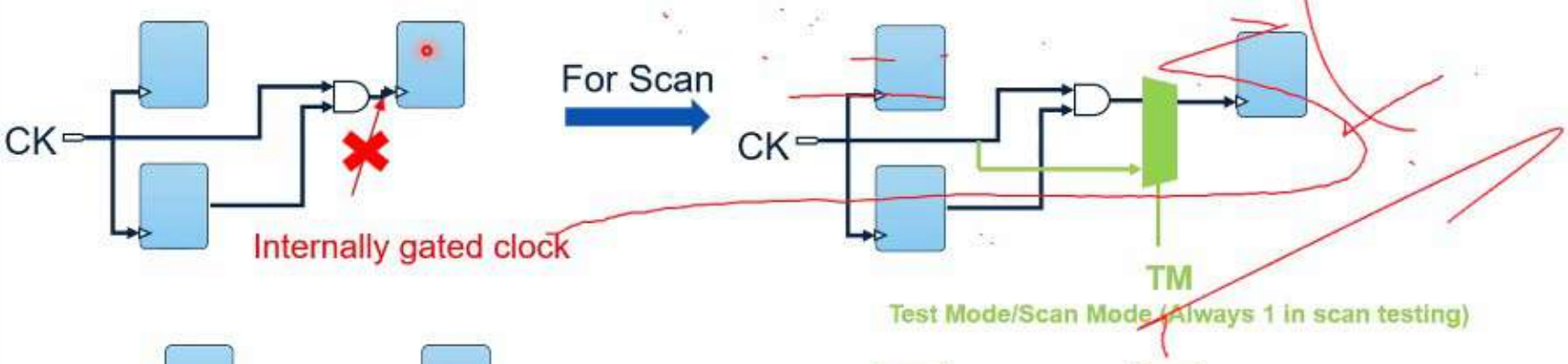

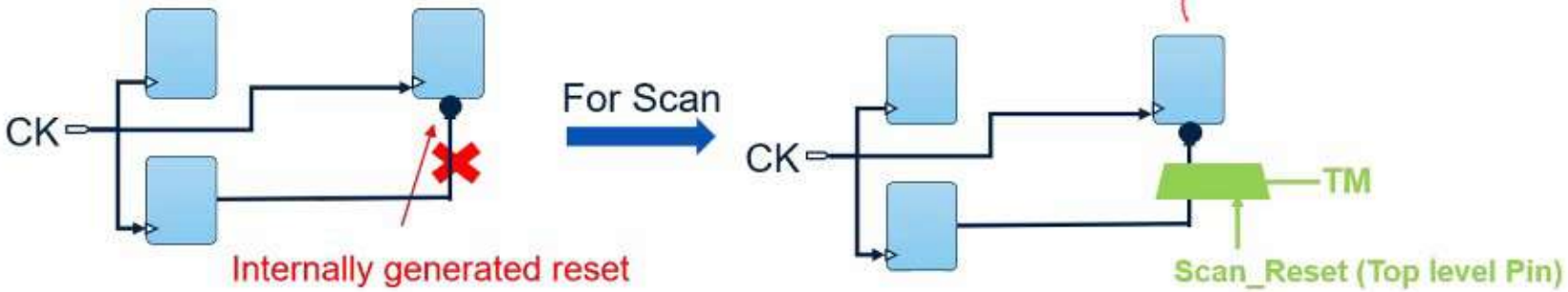

Scan Based Testing : Basic Requirements

- Convert Flip Flop to provide additional control input via MUX

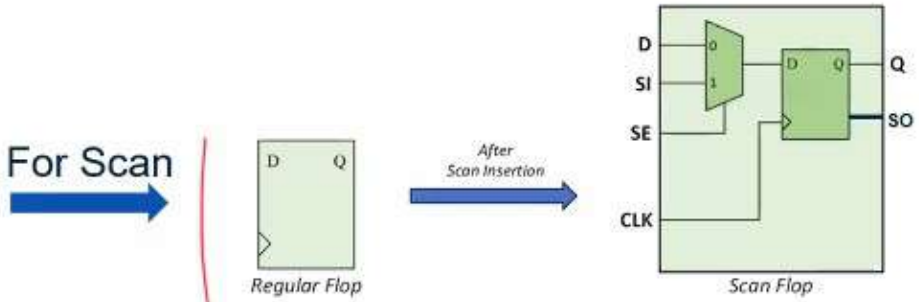

- All clocks/resets should be controllable from top level

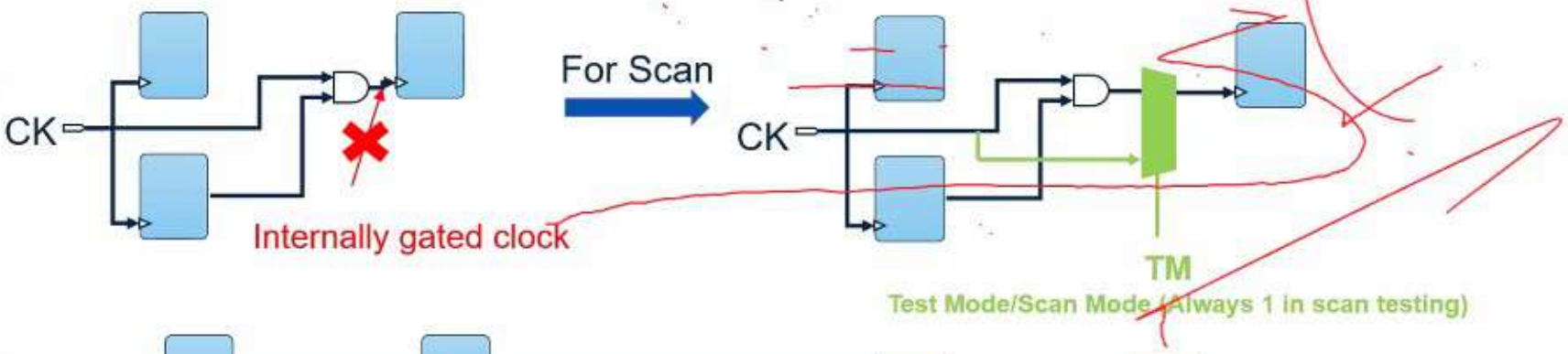

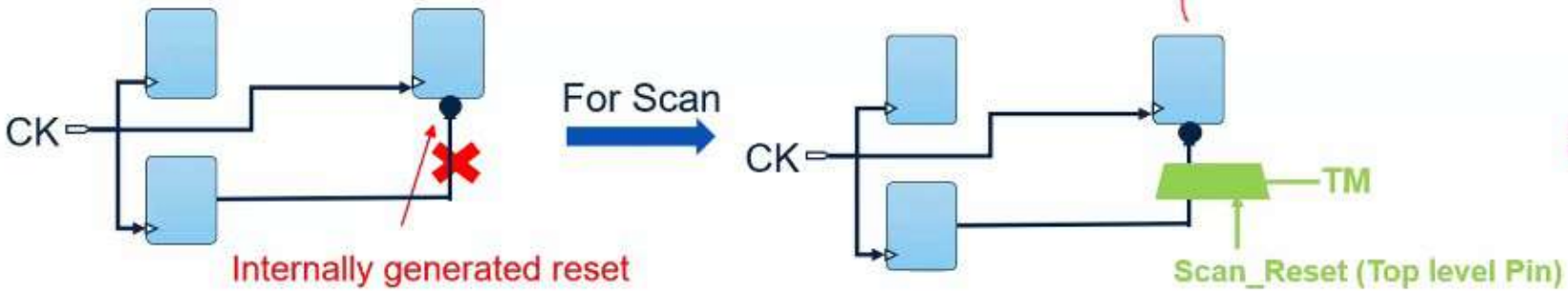

Pins Required:
ScanIn (SI)
ScanOut (SO)
Scan Enable (SE)
Scan Reset (Scan_Reset)
Scan Clock (CK)
Scan/Test Mode (TM)

Generally not mandatory as a top level pin
Keeping as pin only for 1-TOPS

Scan Based testing :1

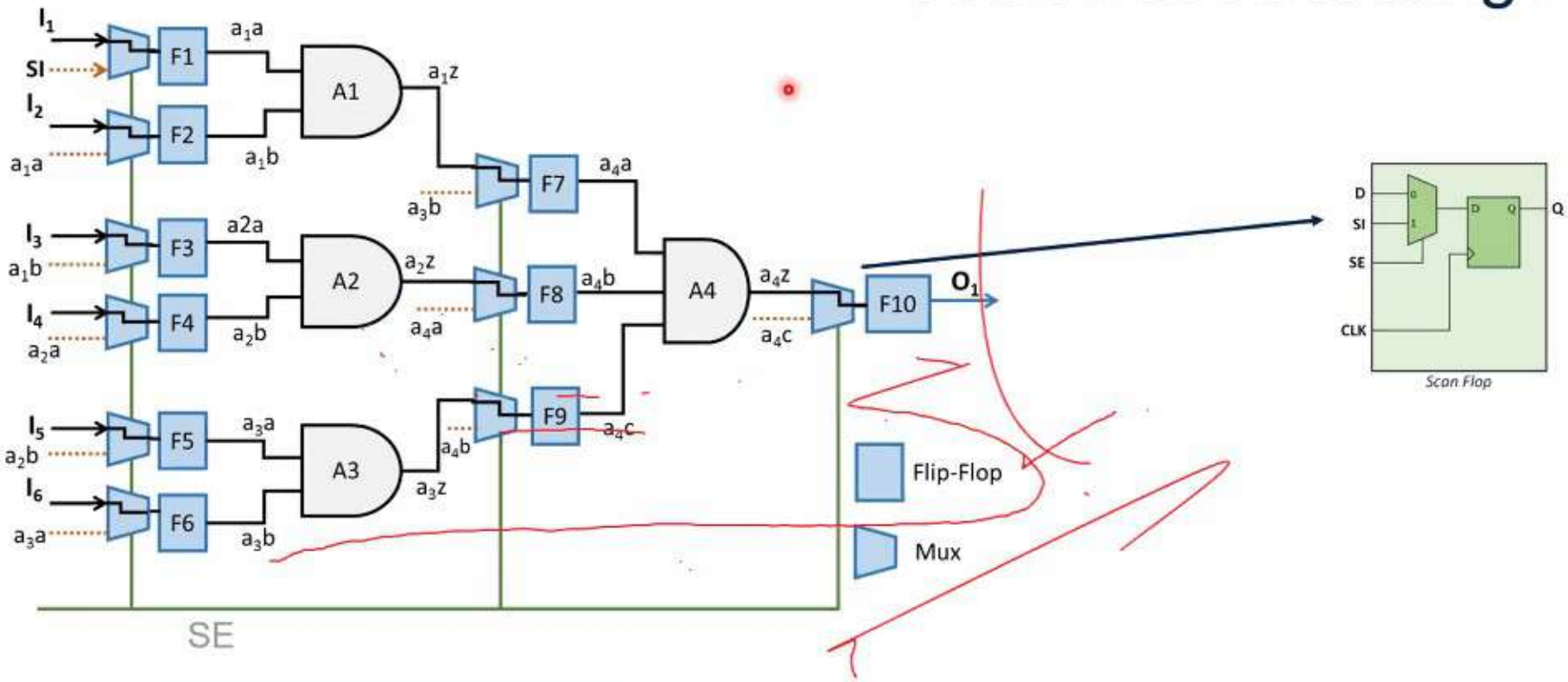

- MUX added for each Flip-Flop
- SE=0 → Functional Mode/ Capture Mode
- SE=1 → Shift Mode

Scan Based testing : 2

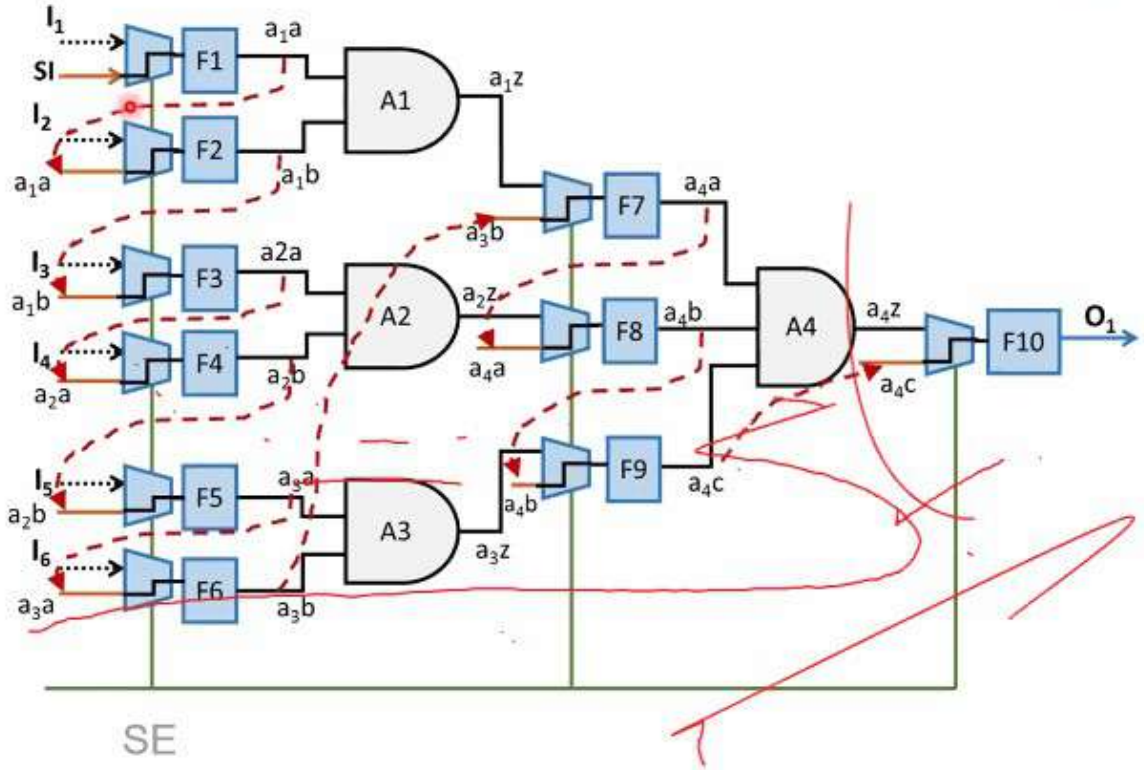

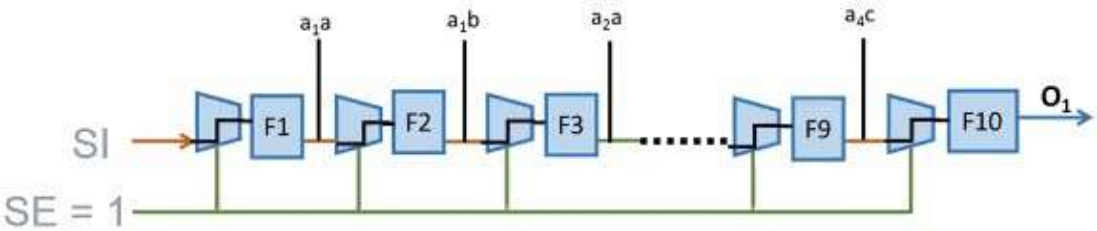

Scan Based testing : 3

- Circuit cycles between Shift and Capture Mode
- Shift Mode (TM=1 & SE =1)
  - Shift In data to configure each gate
- Capture Mode (TM=1 & SE=0)
  - Compute output for each gate based on input state
- Shift-in and Shift-out happens simultaneously
- Number of shift chains = number of ScanIn/ScanOut pads available
- Clock domains are mixed to form scan chains to get uniform scan chain lengths and architecture
- Static timing analysis is needed in different test modes, shift or capture

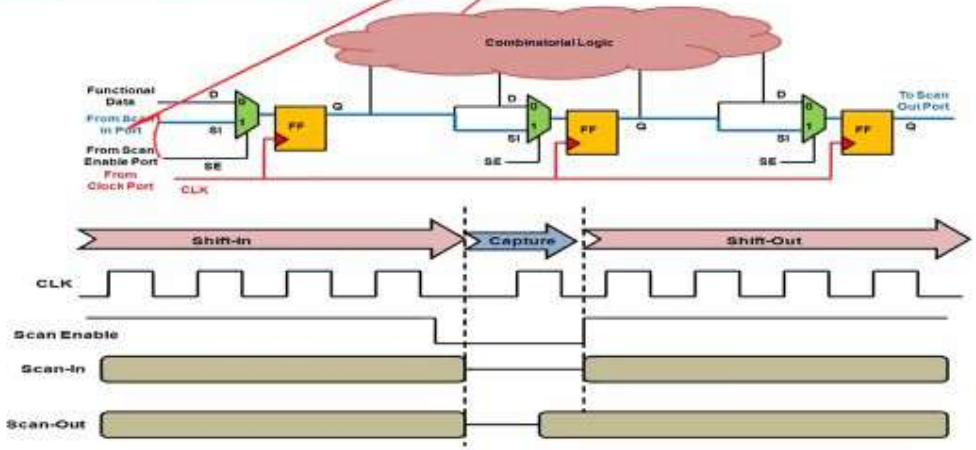

Normal Scan to Compressed Scan : Industry Standard

Test Application Time Calculation			
A	No. of Scan Cells		100,000
B	No. of Scan Channels		20
C	Scan cells per Chain	A/B	5000
D	No. of Scan Patterns		30,000
E	Test Data Volume (TDV)	B X C X D	3,000,000,000
F	Shift Frequency		20 MHz
G	Test Application Time (TAT)	(C X D) / F	7.5 s
H	TAT for 1 million devices	G X 10e6	**7,500,000 s = 86.8 Days**

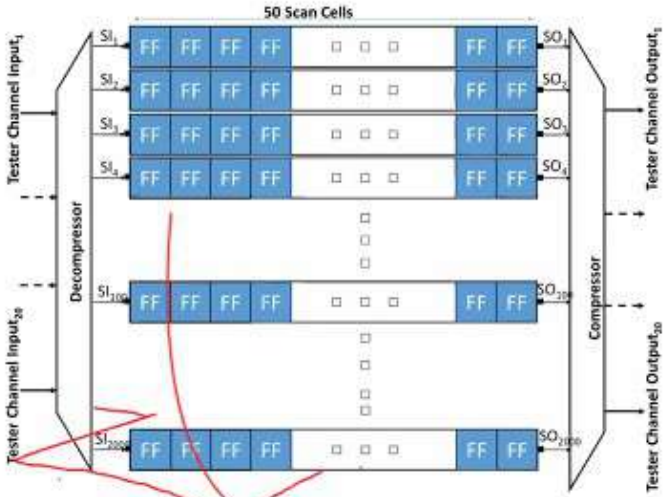

Test Application Time Calculation with Compression			
A	No. of Scan Cells		100,000
B	No. of Scan Channels		20
B'	Compression Ratio		100:1
C	Scan cells per Chain	A/(B X B')	50
D	No. of Scan Patterns		36,000
E	Test Data Volume (TDV)	B X C X D	36,000,000
F	Shift Frequency		20 MHz
G	Test Application Time (TAT)	(C X D) / F	0.09 s
H	TAT for 1 million devices	G X 10e6	**90,000 s = 1.04 Days**

Test Application Time

- High Test Time can increase the production cost and cycle time
- Compression techniques to reduce TAT
- 86.8 days → 1 day !!

Preventing Hold Violations : Lockup Latch

(Inserted by the tool during scan insertion)

- Transparent latch placed for hold timing closures during scan shift
- Necessary to avoid skew problems when:
  - Launch flop and capture flop belongs to different clock domains
  - Launch flop and capture flop belongs to same domain but sitting far apart and having large skew

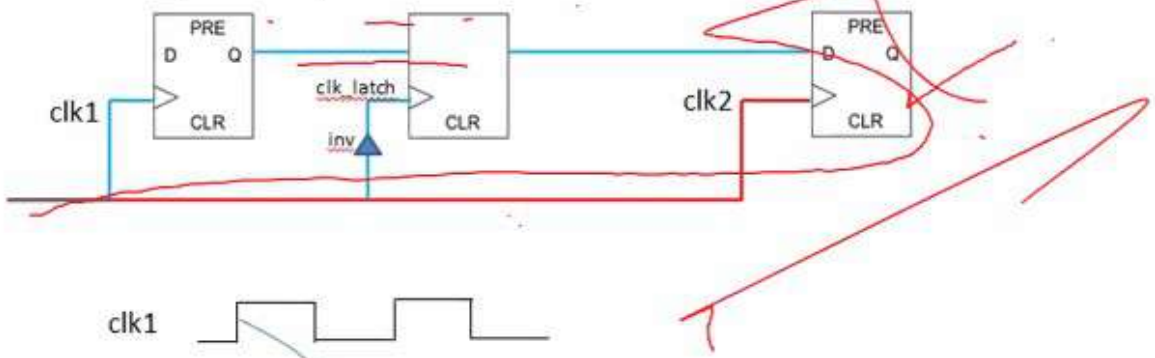

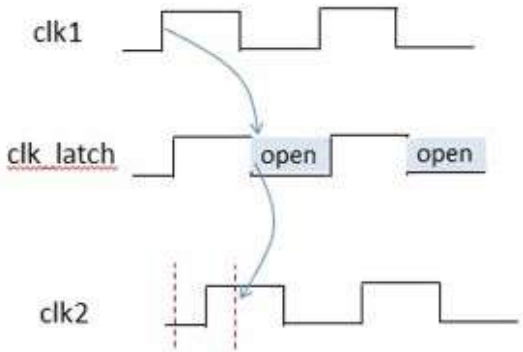

Scan as Part of Design Flow

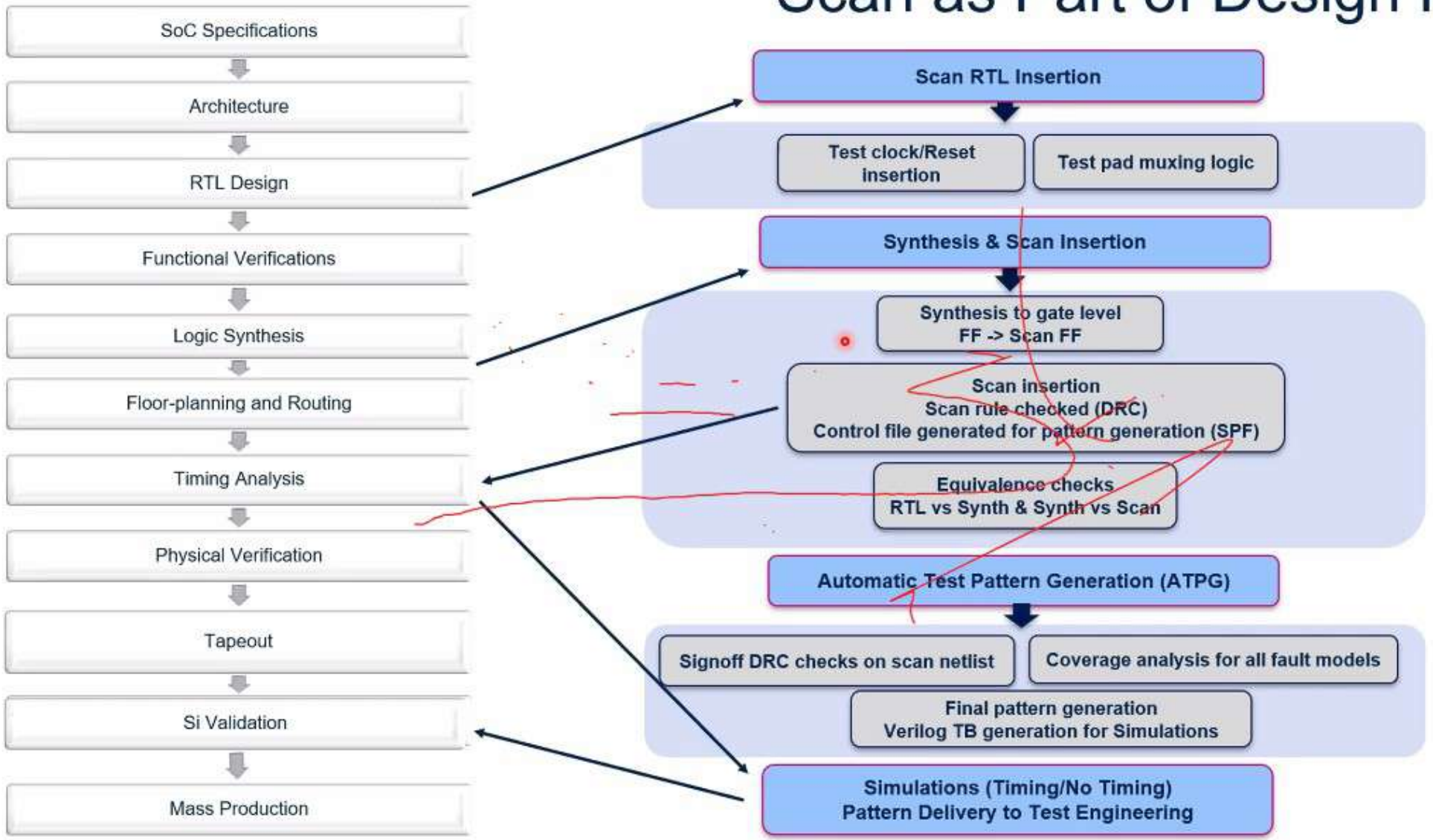

Key DFT Challenges : Non-Intrusiveness

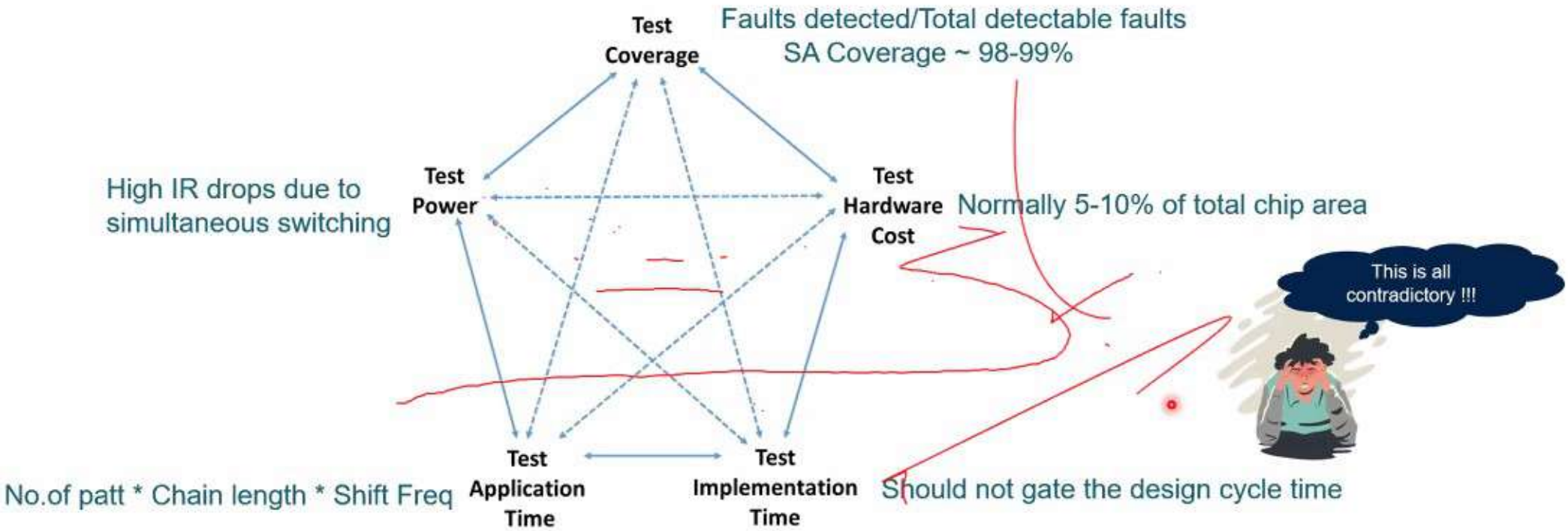

International Technology Roadmap for Semiconductors 2.0, 2015 Edition, Test and Test Equipment, Chapter 4.
P.K. Nag, A. Gattiker, S. Wei, R.D. Blanton, W. Maly, "Modelling the Economics of Testing: A DFT Perspective", *IEEE Design & Test of Computers*, vol. 19, Issue 1, Jan-2002.

LBIST : Scan Based Infield Test Technique

Same Scan Chains but NO External Pins Required for Testing
On Chip Health Monitor

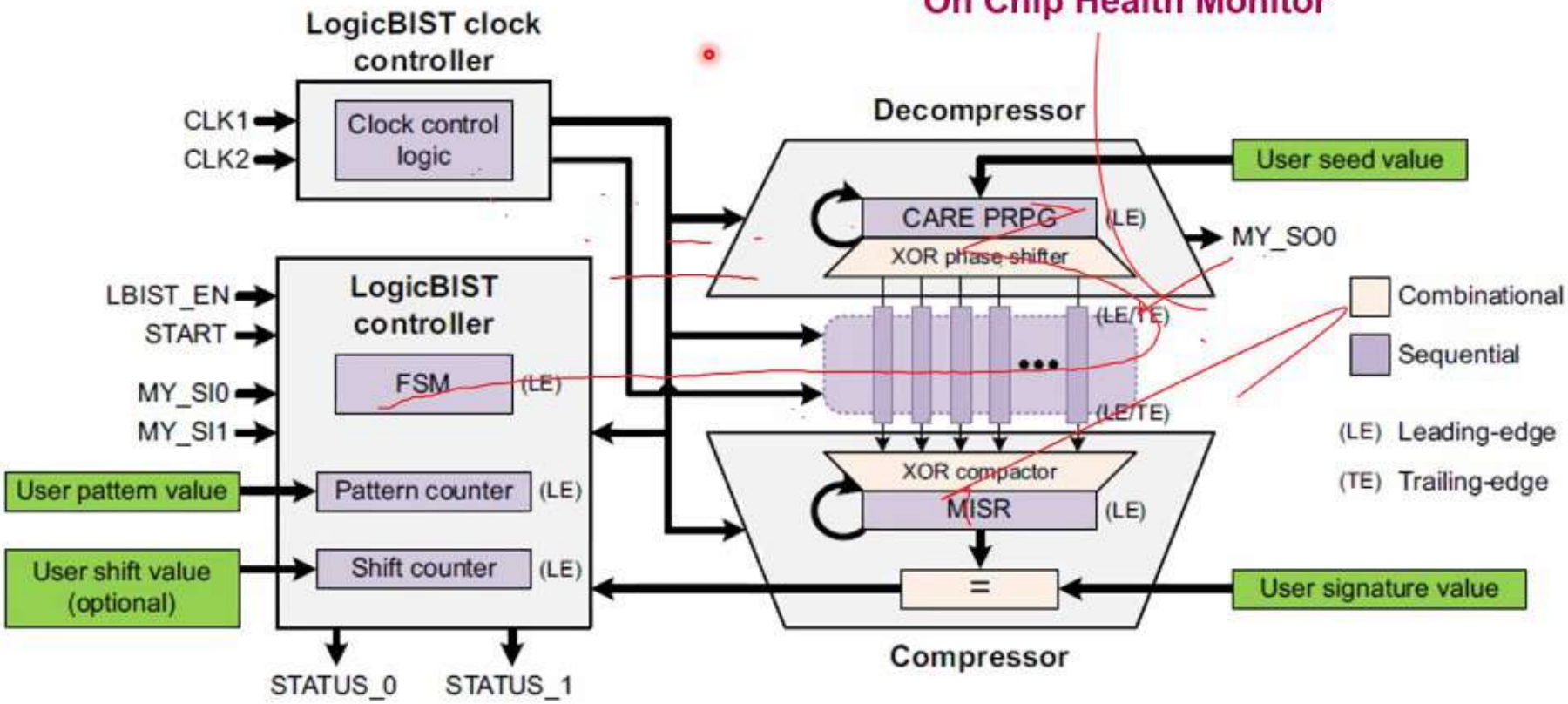

- Synopsis Inc., "DFTMAX Design-for-Test User Guide," Version O-2018.06-SP2, 2018

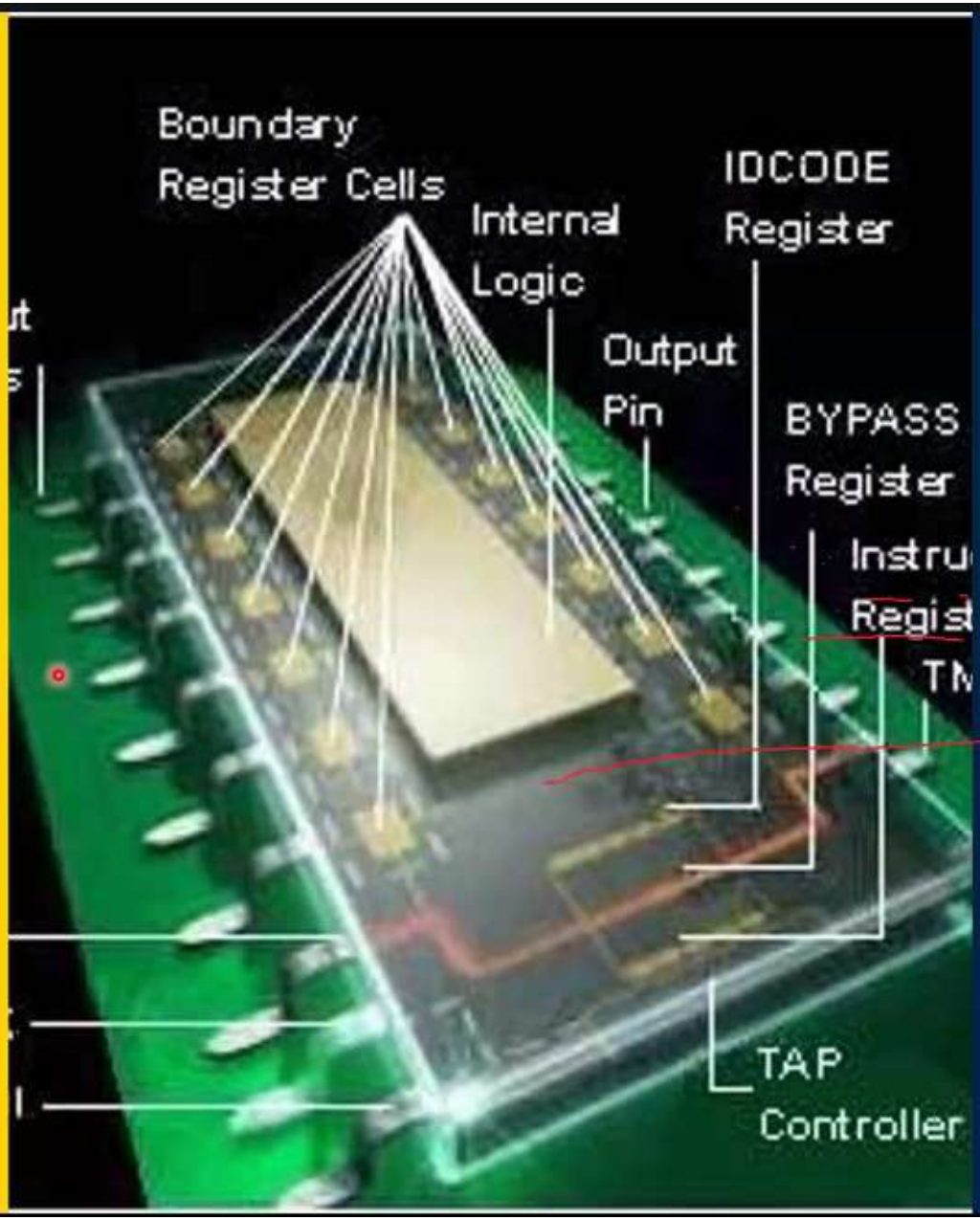

Chip to Chip Connectivity Testing : Boundary Scan

Typical Boundary Scan (BSCAN): IEEE 1149.1

- All signals between the chip's core logic and the pins are intercepted by a serial of "*Boundary Scan Register*" (*BSR Cells*)
- The operation of the test interface is controlled by the Test Access Port (**TAP**) controller. This is a state-machine whose state transitions are controlled by the TMS and TCK signal
- **TDI** is the Test Data Input line, which supplies data to the JTAG registers (Boundary Scan Register, Instruction Register, or other data registers)
- **TDO** is the Test Data Output line, which is used to serially shift data from JTAG registers to be verified.
- **TCK** is the Test Clock input which controls the timing of test interface.
- **TMS** is the Test Mode Select input which controls the transitions of the test interface state machine.
- **TRST** is a Bscan reset pin, it's optional and not list in

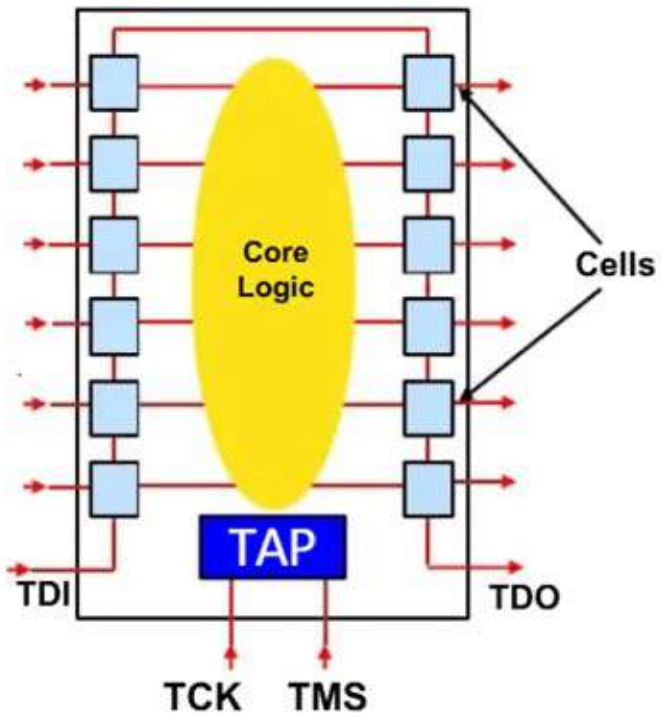

Typical Chip with Boundary Scan

Simplified IO Diagram & BSCAN Cells

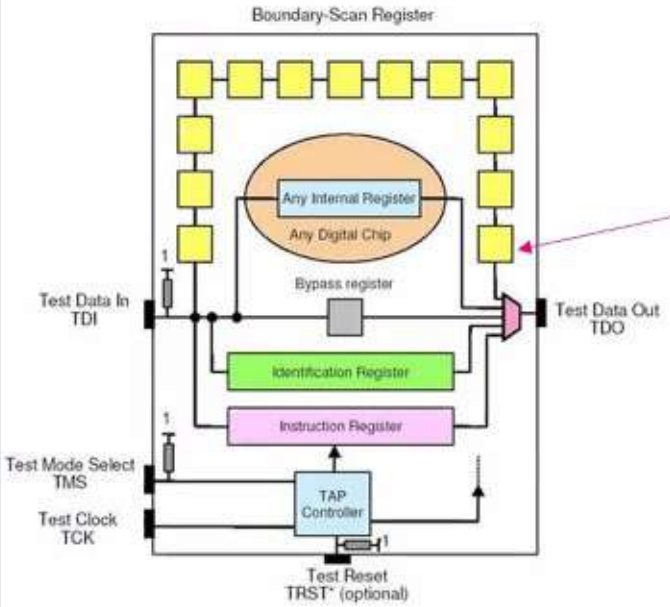

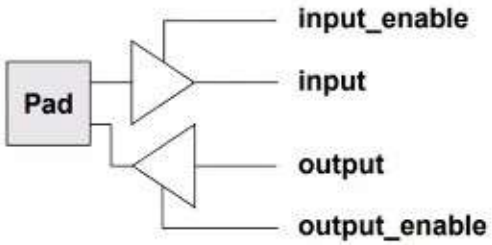

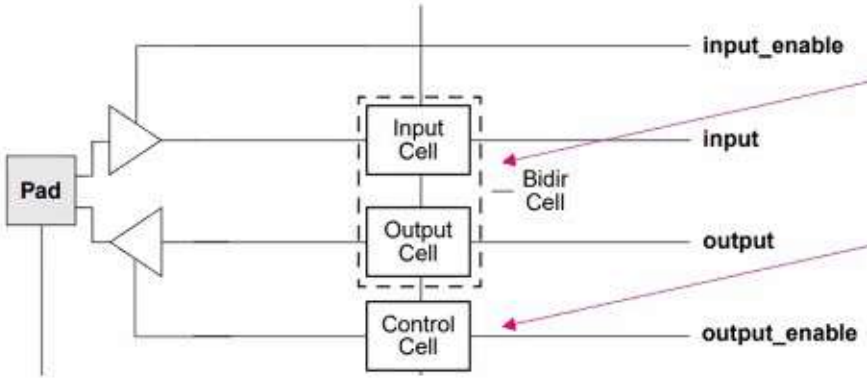

BC7 Cell

BC2 Cell

Basic BS cell

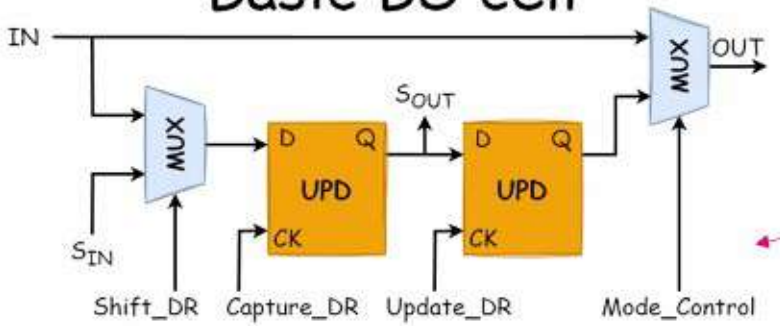

Two parallel chains : Shift/Capture & Update

BSCAN as Connectivity Check

- Actually, At the device level, the Bscan contribute nothing to the function of the internal logic, but, the value of Bscan is the Scan Chain at the board level as shown in the diagram

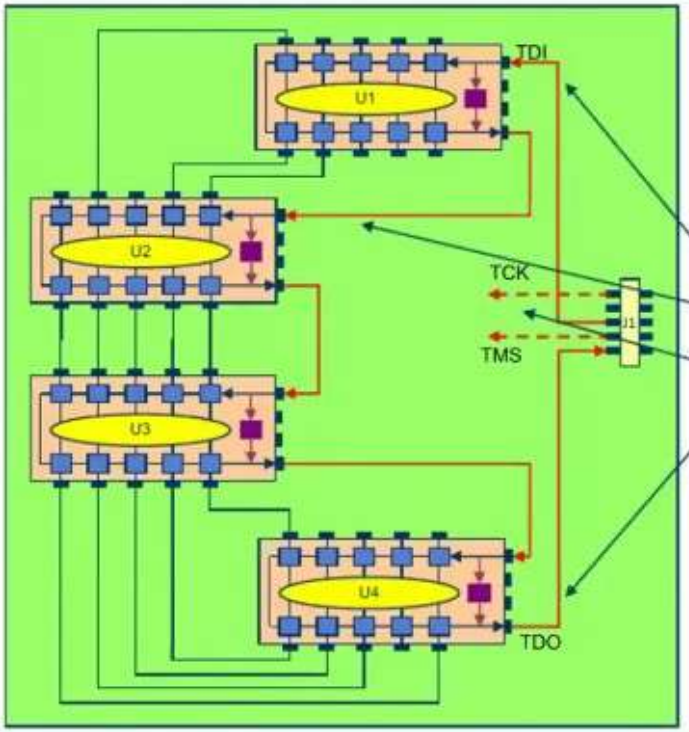

•There is a board containing 4 Bscan devices.
• The connector J1 connected to the TDI of U1.
• TDO from U1 is connected to TDI of U2, and so on.
•TDO from U4 connect to J1.
•TCK and TMS are connected in parallel to each device.
•The 5 devices creating a Boundary Scan Chain

1. **Shift-In:** We shift a '1' into the output cell of **Chip A**.
2. **Update:** We "apply" that '1' to the physical wire on the PCB.
3. **Capture: Chip B** samples the signal on its input pin.
4. **Shift-Out:** We look at the TDO of Chip B.
   - **Received '1'?** The wire is healthy.
   - **Received '0'?** There is a "Stuck-at-0" or an **Open Circuit**.

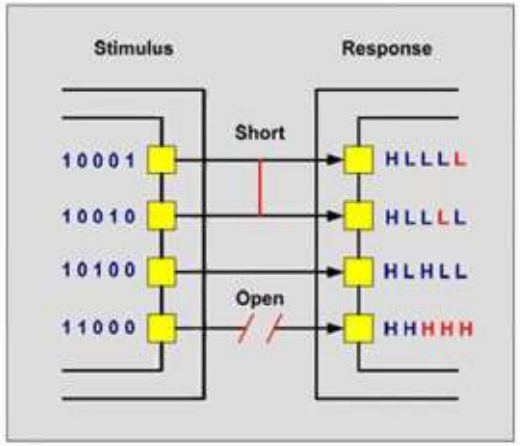

TAP Controller

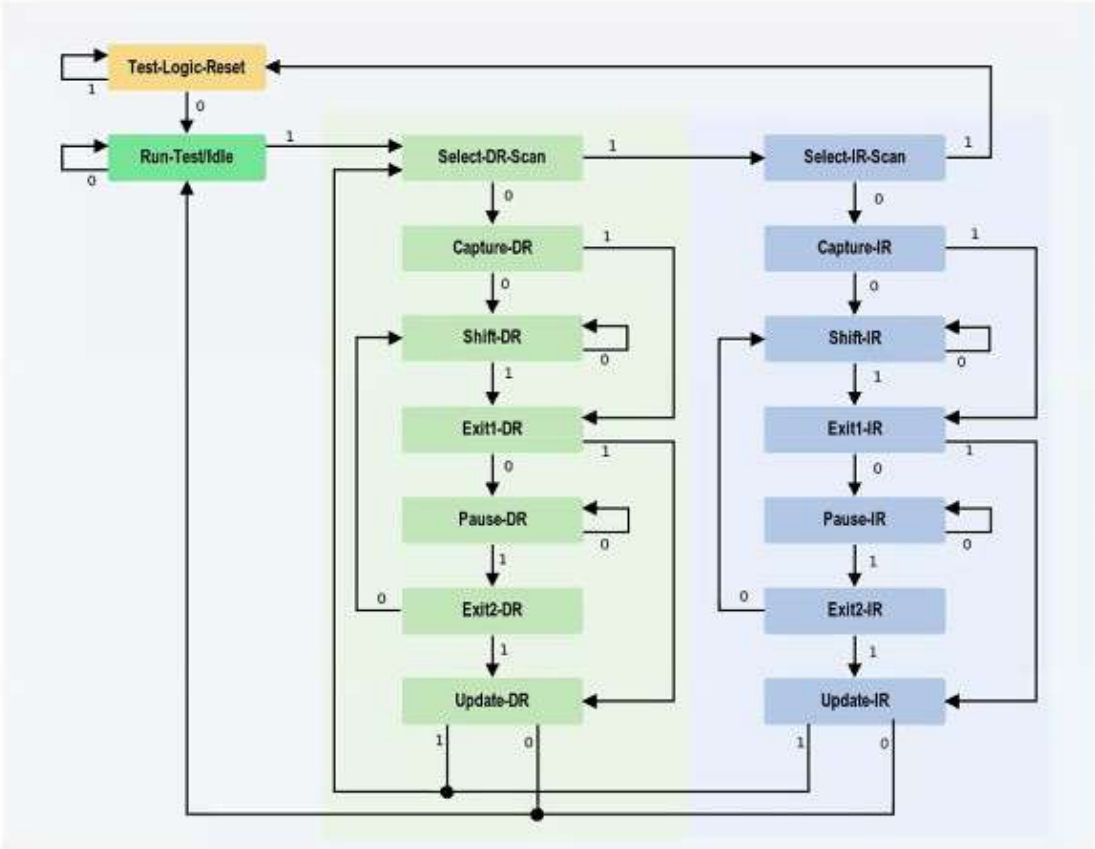

Boundary Scan Instructions

Defined by IEEE 1149.1 standard:

- Mandatory Instructions
  - Extest – to test external interconnect between ICs
  - Bypass – to bypass BS chain in IC
  - Sample/Preload – BS chain samples external I/O
  - IDCode – 32-bit device ID
- Optional Instructions
  - Intest – to test internal logic within the IC
  - RunBIST – to execute internal Built-In Self-Test
    - if applicable (this is rare)
  - UserCode – 32-bit programming data code
    - for programmable logic circuits
  - User Defined Instructions

BSCAN Flow

- **Library Characterization:** DFT tool (like Synopsys TestMAX) reads the **Standard Cell Library** and the **Pad Library**. The Pad Library must contain the Boundary Scan Cell (BSC) models (like BC_1, BC_4, etc.) that match the I/O buffers.
- **RTL/Netlist Readiness:** The tool takes the synthesized Netlist. It identifies all the "Top-level" ports (Input, Output, Bidirectional) that require a boundary cell.
- **TAP Controller Synthesis:** The tool generates the **Test Access Port (TAP) Controller** state machine and the associated Instruction Register (IR).
- **BSR Chaining:** The tool "stitches" the individual BSCs together into a single long shift register.
- **BSDL Generation:** Once the hardware is inserted, the tool exports a **Boundary Scan Description Language (BSDL)** file. This file is the "map" that tells external testers which bit in the register corresponds to which physical pin.

Pin Requirement : TDI/TDO/TMS/TCK
Tap Controller RTL
BSCAN Cells RTL
Glue Logic : IO MUXing, Mode Control Bits Generation
Tool Requirement : Any CAD tool supporting BSCAN generation

Basic MBIST Architecture

- DFT (Design for Testability) feature that integrates a test controller directly on-chip to verify the integrity of embedded SRAMs, ROMs

- An MBIST engine consists of four primary blocks:
  - **MBIST Controller:** The "brain" that executes the test algorithms and manages the test flow.
  - **Interface Logic (MUX):** Switches the memory inputs between "Functional Mode" (system access) and "Test Mode" (BIST access).
  - **Pattern Generator:** Generates the address sequences and data patterns (e.g., March elements).
  - **Response Analyzer:** Compares the data read from the memory against the expected data and flags a **Pass/Fail** status.

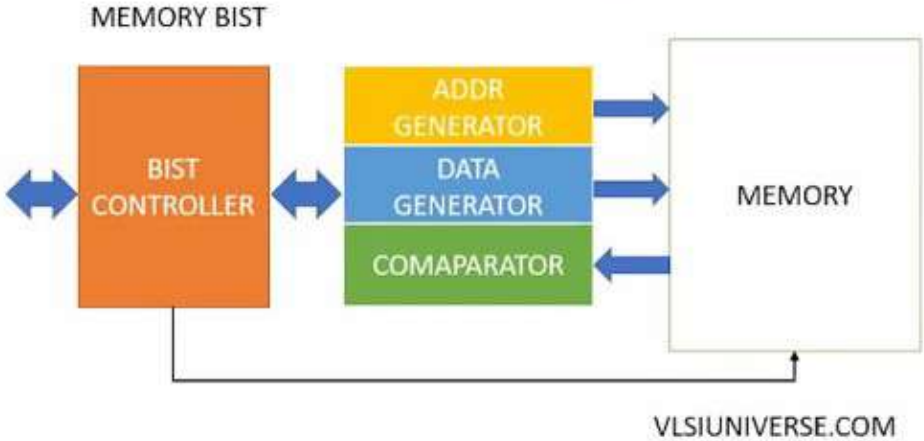

Detecting Memory Faults: The March Algorithm

- Industry Standard for MBIST -> Provides a high level of fault coverage with low complexity

- 6 March Elements -> Sequence of operations provided to each memory cell

1. $\Uparrow (w0)$
2. $\Uparrow (r0, w1)$
3. $\Uparrow (r1, w0)$
4. $\Downarrow (r0, w1)$
5. $\Downarrow (r1, w0)$
6. $\Downarrow (r0)$

Where $\Uparrow$ = addresses $0 \rightarrow N-1$. $\Downarrow$ = $N-1 \rightarrow 0$.

- Famous for its completeness in a short time:
  - **Stuck-At Faults (SAF):** A cell permanently stuck at 0 or 1
  - **Transition faults (TF) :** A cell that cannot transition from 1->0 or 0->1
  - **Coupling Faults (CF):** When writing to one cell (the "aggressor") accidentally changes the value of a nearby cell (the "victim")
  - **Address Decoder Faults (AF):** When the wrong memory location is accessed due to a failure in the decoding logic.

Memory Repair

- In embedded memories, repair means using redundant rows or columns(spares) stored in NVMs or eFuse to replace defective ones, so the memory becomes usable and the chip can still be used.

- This is typically called BISR (Built In Self Repair), driven by MBIST/BIRA (Built In Redundancy Analysis) where we fetch the data from repair logic and replace in the faulty memory locations.

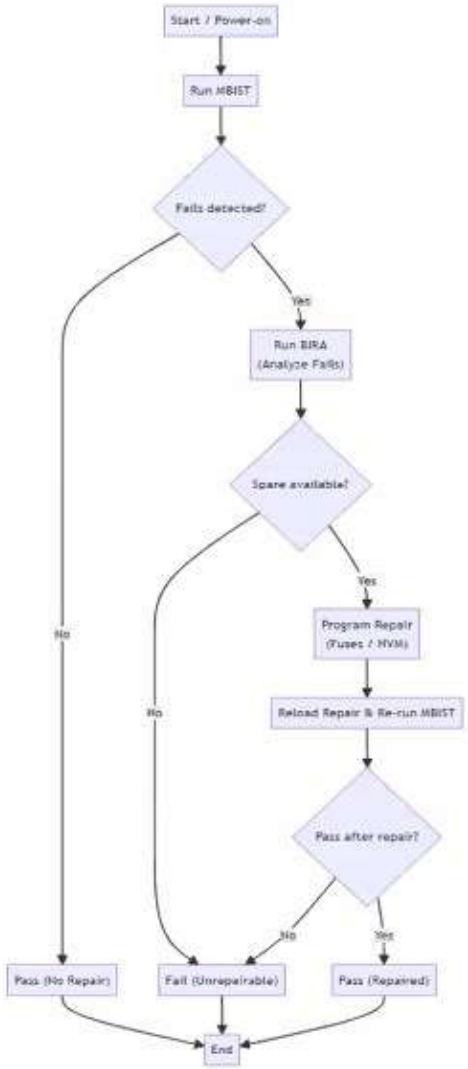

Common Synthesis, DFT & BSCAN Tools

Vendor	Logic Synthesis Tool	DFT Insertion & ATPG Tools	Boundary Scan Tool
Synopsys	• **Design Compiler (DC)** • **Fusion Compiler**	• **TestMAX DFT** (formerly DFT Compiler) • **TestMAX ATPG** (formerly TetraMAX)	• **TestMax Boundary Scan**(formerly BSD compiler)
Siemens EDA	• **Oasys-RTL / Precision**	• **Tessent Scan** • **Tessent ATPG** (includes TestKompress)	• **Tessent Boundary Scan**
Cadence	• **Genus Synthesis Solution**	• **Modus DFT Software Solution**	• **Modus JTAG & BSD**