Proposal

Silicon University

UHF (13.56 MHz) NFC Tag

Saroj Rout

Apr. 03, 2025

NFC Forum Type 2 Tag Specifications

- **Core ISO/IEC 14443-A Features**
  - **Carrier Freq.:** 13.56 MHz.
  - **Data Rate:** 106 kbit/s
  - **Command:** Follows ISO/IEC 14443-A standard commands: Activation, ATQA-SAK, etc. See datasheet.
  - **Anticollision**: allowing multiple tags to operate simultaneously.
  - **Modulation & Data Coding**:
    - Reader->Tag: ASK 100 % Modified Miller 105.9 kHz
    - Tag->Reader: OOK Manchester Code with +/- 847.5 kHz SB
  - **EEPROM/RAM (NTAG21x):** Up to 924 bytes and 888 bytes

- **Core ISO 14443-A Features (contd.)**
  - NDEF and Data mgmt. capability.
  - ~2cm range
- **Security Features**
  - Manufacturer programmed 7-byte UID for each device.
  - Pre-programmed Capability Container with one-time programmable bits.
  - Field programmable read-only locking function.
  - ECC based originality signature.
  - 32-bit password protection.
  - Anti-tearing support for capability container (CC) and lock bits

© Silicon University, Odisha

Architecture

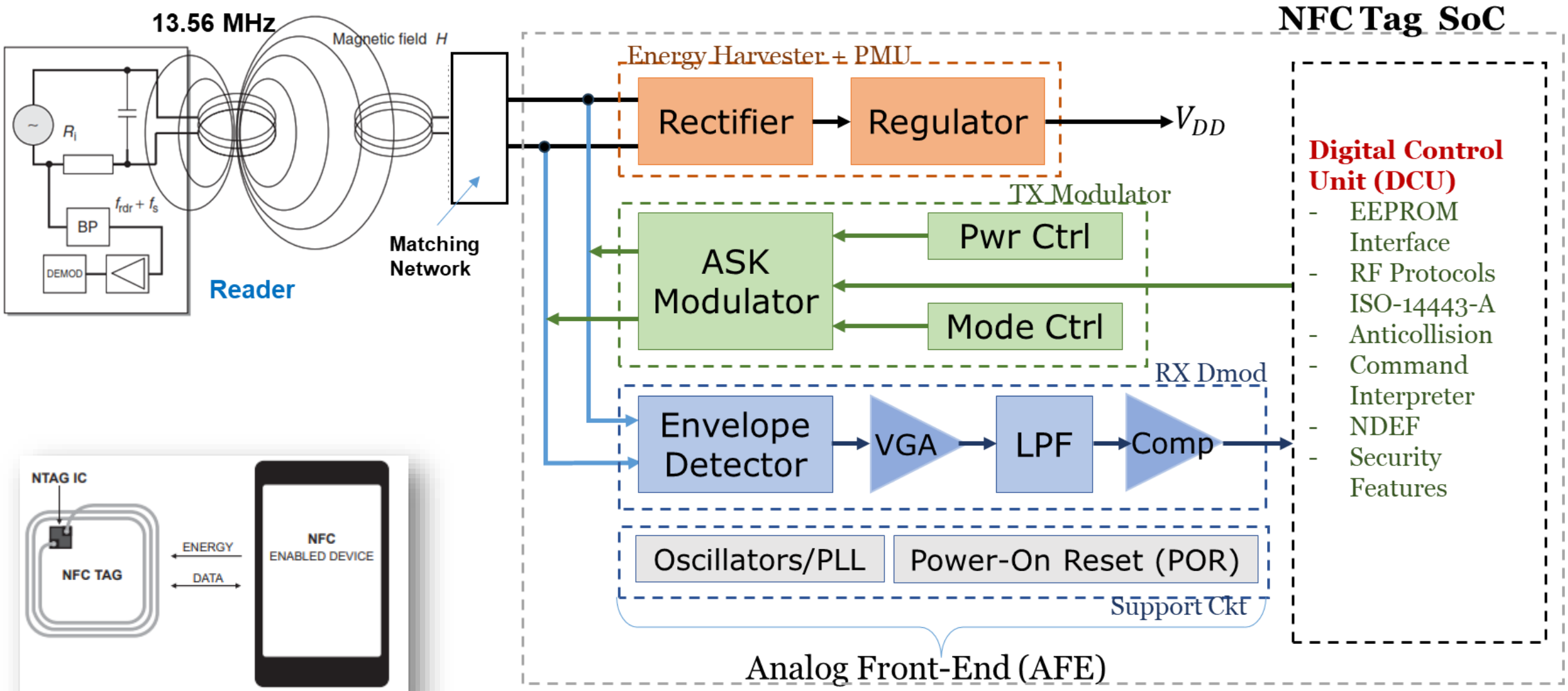

© Silicon University, Odisha

Digital Control Unit (DCU) Architecture

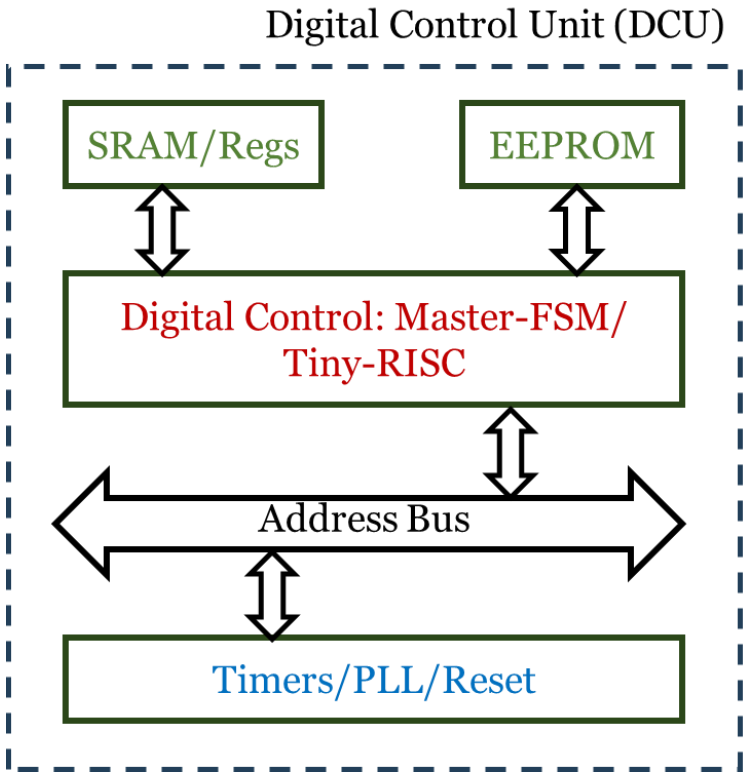

- **Core Digital Features:**
  - ISO/IEC 14443 Type A interface protocol
  - NFC Forum Tag 2 Type compliance
  - Anticollision function
  - ISO/IEC 14443-A standard commands: Activation, ATQA-SAK, etc. See NTAG 21x datasheet.
  - Read/Write Protocol:
    - *Reader->Tag*: Modified Miller 105.9 kHz
    - *Tag->Reader*: OOK Manchester Code.
  - NDEF and Data mgmt. capability.
  - Limited security features: 7-byte UID, Pre-programmed Capability Container with one-time programmable bits, Field programmable read-only locking function.

- **Commercial Products used for NFC Tag Type 2:**
  - **NTAG 21x**: NXP's NFC Forum Type 2 Tag compliant IC.

© Silicon University, Odisha

References

[1] Datasheet: NTAG213/215/216 NFC Forum Type 2 Tag compliant IC with 144/504/888 bytes user memory

[2] K. Finkenzeller, *RFID Handbook: Fundamentals and Applications in Contactless Smart Cards, Radio Frequency Identification and Near-Field Communication*. John Wiley & Sons, 2010.

[3] H. Lehpamer, *RFID Design Principles*. Artech House, 2012.

[4] Y.-H. Kim, Y.-C. Choi, M.-W. Seo, S.-S. Yoo, and H.-J. Yoo, "A CMOS Transceiver for a Multistandard 13.56-MHz RFID Reader SoC," *IEEE Transactions on Industrial Electronics*, vol. 57, no. 5, pp. 1563–1572, May 2010.

[5] Y.-S. Hwang and H.-C. Lin, "A New CMOS Analog Front End for RFID Tags," *IEEE Transactions on Industrial Electronics*, vol. 56, no. 7, pp. 2299–2307, Jul. 2009.

[6] V. Fiore *et al.*, "An Integrated 13.56-MHz RFID Tag in a Printed Organic Complementary TFT Technology on Flexible Substrate," *IEEE Transactions on Circuits and Systems I: Regular Papers*, vol. 62, no. 6, pp. 1668–1677, Jun. 2015.

[7] K. Kotani, A. Sasaki, and T. Ito, "High-Efficiency Differential-Drive CMOS Rectifier for UHF RFIDs," *IEEE Journal of Solid-State Circuits*, vol. 44, no. 11, pp. 3011–3018, Nov. 2009.

© Silicon University, Odisha