National Defence | Défense nationale

C-12-114-000/DW-001

DESCRIPTION AND MAINTENANCE INSTRUCTIONS

CT114 TUTOR

WIRING DIAGRAMS

(ENGLISH)

Issued on Authority of the Chief of the Defence Staff
Publiée avec l'autorisation du Chef d'état-major de la Défense

OPI: DAEPM (FT) 5-2

2002-09-01
Ch 2 2005-04-15

Canada

LIST OF EFFECTIVE PAGES

Insert latest changed pages; dispose of superseded pages in accordance with applicable orders.

NOTE

The portion of the text affected by the latest change is indicated by a black vertical line in the margin of the page. Changes to illustrations are indicated by miniature pointing hands or black vertical lines.

Dates of issue for original and changed pages are:

Original	0	2002-09-01		Ch	2	2005-04-15	
Ch	1	2004-10-01					

Zero in Change No. column indicates an original page. Total number of pages in this publication is 328 consisting of the following:

Page No.	Change No.
Title	2
A	2
i to vii/viii	0
1-1	0
1-2	2
1-3 to 1-26	0
1-27 to 1-29	2
1-30	1
1-31 to 1-32	0
1-33	1
1-34 to 1-35	0
1-36	1
1-37 to 1-39	0
1-40	1
1-41 to 1-44	0
1-45 to 1-46	1
1-47	0
1-48 to 1-49/1-50	1
1-51/1-52 to 1-62	0
2-1 to 2-125/2-126	0
2-127/2-128	1
2-129/2-130 to 2-131/2-132	0
2-133/2-134	1
2-135/2-136 to 2-141/2-142	0
2-143/2-1-44	1
2-145/2-146	0
2-147/2-148	1
2-149/2-150 to 2-159/2-160	0
2-161/2-162	1
2-163/2-164 to 2-165/2-166	0
3-1 to 3-5	0
3-6 to 3-9	2
3-10 to 3-25/3-26	0
3-27/3-28 to 3-29/3-30	2
3-31/3-32 to 3-73/3-74	0
4-1 to 4-11/4-12	0
LA-1 to LA-4	0

Contact Officer: DAEPM (FT) 5-2

©2002 DND/MDN Canada

CT114 TUTOR

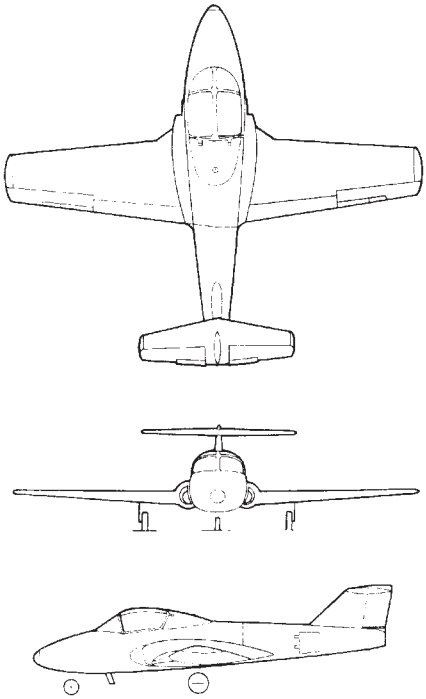

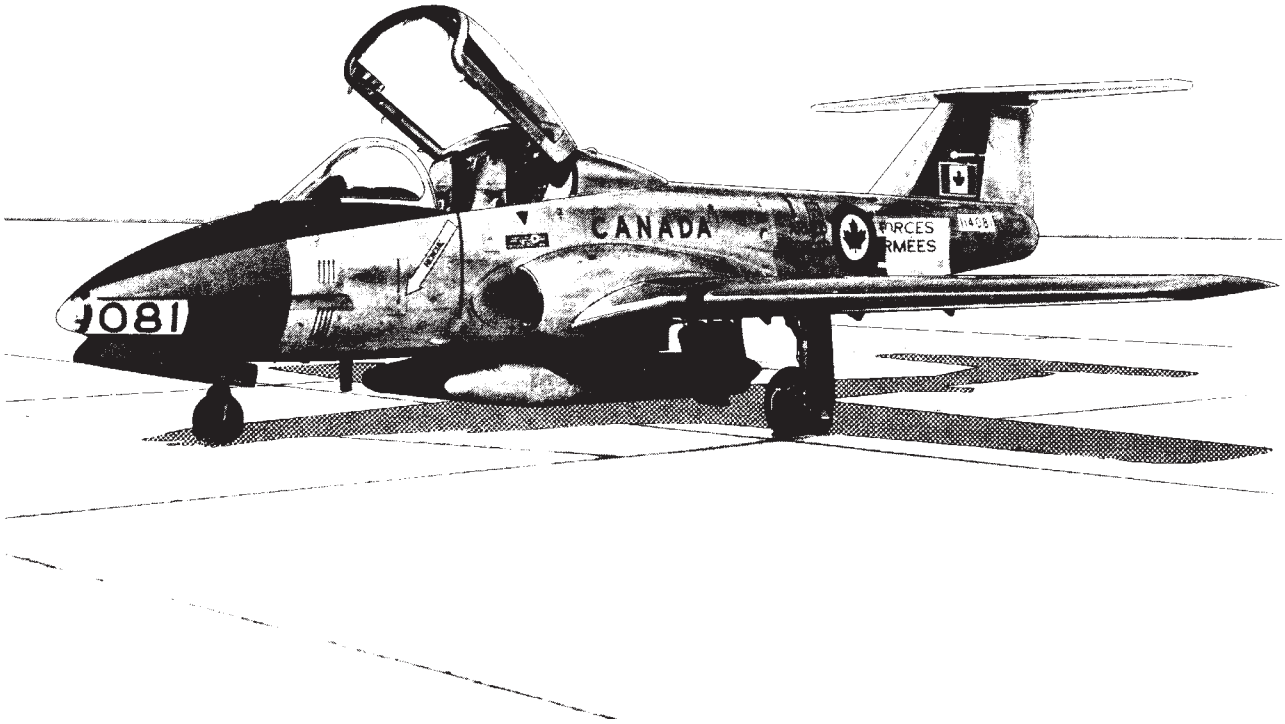

Frontispiece

TABLE OF CONTENTS

	PAGE
PART 1 – INTRODUCTION	**1-1**
PURPOSE	1-1
WIRE/CABLE SPECIFICATION CHART	1-1
DRAWING SYMBOL CHART	1-1
ELECTRICAL EQUIPMENT LOCATION/ REFERENCE DESIGNATOR LIST	1-1
AIRCRAFT GENERAL ARRANGEMENT	1-1
STATIONS DIAGRAM	1-1
AIRCRAFT AREAS DIAGRAM	1-1
ACCESS PANELS	1-1
TABLE OF ITEM IDENTIFICATION LETTERS – WIRE AND ITEM CIRCUIT FUNCTIONS	1-1
TABLE OF ITEM IDENTIFICATION LETTERS – ITEM PREFIX AND TYPE OF EQUIPMENT	1-1
PART 2 – ELECTRICAL WIRING DATA	**2-1**
GENERAL INFORMATION	2-1
General	2-1
Schematics and Diagrams	2-1
PART 3 – ELECTRONIC WIRING DATA	**3-1**
GENERAL INFORMATION	3-1
General	3-1
Schematics and Diagrams	3-1
Electronic Equipment Location/Reference Designator List	3-1
PART 4 – ELECTRICAL WIRING DATA (SNOWBIRD)	**4-1**
GENERAL INFORMATION	4-1
General	4-1
Diagram	4-1
Electrical Symbols	4-1
LIST OF ABBREVIATIONS	**LA-1**

LIST OF FIGURES

FIGURE	TITLE	PAGE
1-1	List of Wire/Cable Specification Chart	1-2
1-2	Drawing Symbol Chart (6 Sheets)	1-3
1-3	Electrical Equipment Location/Reference Designator List (42 Sheets)	1-9
1-4	Aircraft – General Arrangement	1-53
1-5	Aircraft Stations Diagram	1-54
1-6	Aircraft Areas Diagram	1-55
1-7	Access Panels (2 Sheets)	1-57
1-8	Table of Item Identification Letters – Wire and Item Circuit Functions	1-61
1-9	Table of Item Identification Letters – Item Prefix and Type of Equipment	1-62
2-1	Flight Controls – Schematic (2 Sheets)	2-3
2-2	Flight Controls – Wiring (4 Sheets)	2-7
2-3	Pre-Stall Warning System – Schematic	2-15
2-4	Pre-Stall Warning System – Wiring	2-17
2-5	Ground Safety – Schematic	2-19
2-6	Ground Safety – Wiring (2 Sheets)	2-21
2-7	Landing Gear Control Warning and Indication – Schematic (2 Sheets)	2-25
2-8	Landing Gear Control Warning and Indication – Wiring (5 Sheets)	2-29
2-9	Seat Adjust – Schematic	2-39
2-10	Seat Adjust – Wiring	2-40
2-11	Canopy Control – Schematic	2-41
2-12	Canopy Control – Wiring	2-43
2-13	Air Conditioning – Schematic (3 Sheets)	2-45
2-14	Air Conditioning – Wiring (3 Sheets)	2-51
2-15	Windshield De-Ice and Demisting – Schematic	2-57
2-16	Windshield De-Ice and Demisting – Wiring (2 Sheets)	2-59
2-17	Fire and Overheat Detection – Schematic	2-63
2-18	Fire and Overheat Detection – Wiring (2 Sheets)	2-65
2-19	Master Warning Control – Schematic	2-69
2-20	Master Warning Control – Wiring	2-71
2-21	Fuel Low Pressure Warning System – Schematic	2-73
2-22	Fuel Low Pressure Warning System – Wiring	2-74
2-23	Auxiliary Fuel System – Schematic	2-75
2-24	Auxiliary Fuel System – Wiring	2-77
2-25	Engine Oil Temperature Warning System – Schematic	2-79
2-26	Engine Oil Temperature Warning System – Wiring	2-80
2-27	Engine Control – Schematic	2-81
2-28	Engine Control – Wiring (2 Sheets)	2-83

LIST OF FIGURES (Cont)

FIGURE	TITLE	PAGE
2-29	Throttle Assemblies – Wiring	2-87
2-30	Turn and Slip Indicators – Schematic	2-88
2-31	Turn and Slip Indicators – Wiring	2-89
2-32	Attitude Indicator – Schematic	2-90
2-33	Attitude Indicator – Wiring	2-91
2-34	Engine Oil Pressure Indicator – Schematic	2-93
2-35	Engine Oil Pressure Indicator – Wiring	2-94
2-36	Turbine Exhaust Gas Temperature Indicator – Schematic	2-95
2-37	Turbine Exhaust Gas Temperature Indicator – Wiring	2-96
2-38	Engine Tachometer – Schematic	2-97
2-39	Engine Tachometer – Wiring	2-98
2-40	Engine Life Monitor – Schematic	2-99
2-41	Engine Life Monitor – Wiring	2-100
2-42	Fuel Quantity and Low Level Warning Indicator – Schematic	2-101
2-43	Fuel Quantity and Low Level Warning Indicator – Wiring (2 Sheets)	2-103
2-44	Wing Flap Position Indicator – Schematic	2-106
2-45	Wing Flap Position Indicator – Wiring	2-107
2-46	Registering Accelerometer – Schematic	2-108
2-47	Registering Accelerometer – Wiring	2-109
2-48	Hydraulic Pressure Indicator – Schematic	2-111
2-49	Hydraulic Pressure Indicator – Wiring	2-112
2-50	Servoed Altimeter System – Schematic	2-113
2-51	Servoed Altimeter System – Wiring	2-115
2-52	Compass System – Schematic	2-117
2-53	Compass System – Wiring (3 Sheets)	2-119
2-54	Discrete Component Box – Nose	2-125
2-55	DC Power Supply and Engine Starting – Schematic (3 Sheets)	2-127
2-56	DC Power Supply and Engine Starting – Wiring (5 Sheets)	2-133
2-57	Interior and Exterior Lighting System – Schematic	2-143
2-58	Taxi/Landing Lights – Snowbird Aircraft	2-145
2-59	Interior and Exterior Lighting System – Wiring (4 Sheets)	2-147
2-60	AC Power Supply – Schematic	2-155
2-61	AC Power Supply – Wiring (2 Sheets)	2-157
2-62	Load Monitoring System – Wiring (2 Sheets)	2-161
2-63	Engine Monitoring System	2-165
3-1	Electronic Equipment Location/Reference Designator List (12 Sheets)	3-2
3-2	Intercom System – Schematic	3-15
3-3	Intercom System – Wiring (2 Sheets)	3-17

LIST OF FIGURES (Cont)

FIGURE	TITLE	PAGE
3-4	AN/ARC-164 UHF System – Schematic (2 Sheets)	3-21
3-5	AN/ARC-164 UHF System – Wiring	3-25
3-6	AN/ARN-504 TACAN System – Schematic	3-27
3-7	AN/ARN-504 TACAN System – Wiring (3 Sheets)	3-29
3-8	AN/ARC-511 VHF System – Schematic	3-35
3-9	AN/ARC-511 VHF System – Wiring (2 Sheets)	3-37
3-10	VOR/TACAN Switching – Schematic (7 Sheets)	3-41
3-11	AN/ARN-508 VOR/ILS Navigation System – Schematic	3-49
3-12	AN/ARN-508 VOR/ILS and Course Indication Switching – Wiring (5 Sheets)	3-51
3-13	IFF System – Schematic	3-61
3-14	IFF System – Wiring (2 Sheets)	3-63
3-15	Discrete Component Box – Nose	3-67
3-16	Discrete Component Box – Cockpit	3-69
3-17	ADF-206A System – Schematic	3-71
3-18	ADF-206A System – Wiring	3-73
4-1	Smoke Generation System – Wiring	4-3
4-2	Intcon Diagram Cross Cockpit – Wiring (2 Sheets)	4-5
4-3	Hand-Held Global Positioning System (GPS) – Wiring	4-8
4-4	Interconnect Diagram VHF Press To Talk Switches – Wiring	4-9
4-5	Part of A2 Discrete Component Box – ADF Resistors	4-11

PART 1

INTRODUCTION

PURPOSE

1. This publication provides electrical and electronic wiring data for CT114 Tutor and Snowbird aircraft. For general information and preventive maintenance instructions, see C-12-114-000/MF-001. For a list of applicable publications, see C-12-114-000/AX-000.

NOTE

This publication contains information pertaining to the wiring of the electrical and telecommunication systems used in CT114 Tutor aircraft rewired in accordance with C-12-114-000/CD-036. For information regarding a pre-rewired aircraft, refer to C-12-114-000/DW-000.

WIRE/CABLE SPECIFICATION CHART

2. The Wire/Cable Specification Chart in Figure 1-1 lists the types of wire and part numbers used in the CT114 Tutor aircraft.

DRAWING SYMBOL CHART

3. The Drawing Symbol Chart (see Figure 1-2) is a listing of all symbols found in this CFTO.

ELECTRICAL EQUIPMENT LOCATION/ REFERENCE DESIGNATOR LIST

4. The Electrical Equipment Location/Reference Designator List (see Figure 1-3) is separated into two sections. The first section is in table format, giving the following information on all electrical components:

a. Designator number.

b. Brief description and location.

c. Part number.

d. Item number.

The second section is a general view of the aircraft which shows the physical location of a component on the aircraft with the help of item numbers referred to in the first section. Both sections should be used in conjunction with each other.

AIRCRAFT GENERAL ARRANGEMENT

5. The Aircraft General Arrangement (see Figure 1-4) is a general view of the aircraft which is used to quickly locate major components.

STATIONS DIAGRAM

6. The Stations Diagram (see Figure 1-5) shows the wing, horizontal stabilizer, vertical stabilizer and fuselage stations.

AIRCRAFT AREAS DIAGRAM

7. For maintenance purposes, the aircraft has been separated into a number of distinct areas, each having definite boundaries (see Figure 1-6).

ACCESS PANELS

8. The access panels (see Figure 1-7) are numbered to identify the panel and the area in which it is located. If the panel is on an undersurface or on the port side of the fuselage, the second number will be an even number. For the starboard side of the fuselage, and the upper surfaces, the second number will be an odd number.

TABLE OF ITEM IDENTIFICATION LETTERS – WIRE AND ITEM CIRCUIT FUNCTIONS

9. Wiring in the aircraft is identified by a letter-number combination in accordance with Specification MIL-W-5088B. The identification is printed on the wire at frequent intervals. For wire identification letters, see Figure 1-8. This identification does not apply to the internal wiring of equipment. Where a damaged wire needs repair, splicing is to be avoided. For information on electrical wiring procedures, refer to C-17-010-002/ME-000.

TABLE OF ITEM IDENTIFICATION LETTERS – ITEM PREFIX AND TYPE OF EQUIPMENT

10. Each item of electrical equipment in the aircraft is identified by a letter prefix and a number. The letter prefix indicates the type of equipment. For a list of item number prefixes, see Figure 1-9. All item numbers except those for pressure disconnects, terminal blocks and ground studs, have suffix letters which show the circuit to which the item belongs.

Name	Part Number	Specification
Cable, Shielded	M27500A22TG3T14	MIL-C-27500
Cable	M27500A20TG3U14	MIL-C-27500
Cable, Shielded	M27500A20TG3T14	MIL-C-27500
Cable	M27500A20TG2U14	MIL-C-27500
Cable	M27500A22TG3U14	MIL-C-27500
Cable, Shielded	M27500A22TG2T14	MIL-C-27500
Cable, Shielded	M27500A22TG1T14	MIL-C-27500
Cable, Shielded	M27500A22TG1T14	MIL-C-27500
Wire	M22759/34-22-9	MIL-W-22759/34
Wire	M22759/34-20-9	MIL-W-22759/34
Wire	M22759/34-18-9	MIL-W-22759/34
Wire	N22759/34-16-9	MIL-W-22759/34
Cable	M27500A18LE1S06	MIL-C-27500
Cable, Shielded	M27500A22TG8T14	MIL-C-27500
Cable, Shielded	M27500A22TG4T14	MIL-C-27500
Cable, Shielded	M27500A20TG2T14	MIL-C-27500
Wire	M22759/34-12-9	MIL-W-22759/34
Wire	M22759/34-8-9	MIL-W22759/34
Wire, Thermocouple	M5846-2A2/16	MIL-W-5846
Wire, High Temperature	M25038/3-20-9	MIL-W-25038/3
Wire, High Temperature	M25038/3-18-9	MIL-W-25038/3
Wire, High Temperature	M25038/3-16-9	MIL-W-25038/3
Cable, Coaxial	M17/127-RG393	MIL-C-17/127
Wire	M22759/2-4-9	MIL-W-22759/2
Wire	M22759/2-2-9	MIL-W-22759/2
Wire	M22759/34-01-5D	MIL-W-22759/34
Cable	M5898-WM85U5	MIL-C-5898
Cable, Coaxial	M17/95-RG180	MIL-C-17/95
Wire	M22759/34-4-9	MIL-W-22759/34
Wire	M22759/34-1-50	MIL-W-22759/34

Figure 1-1 List of Wire/Cable Specification Chart

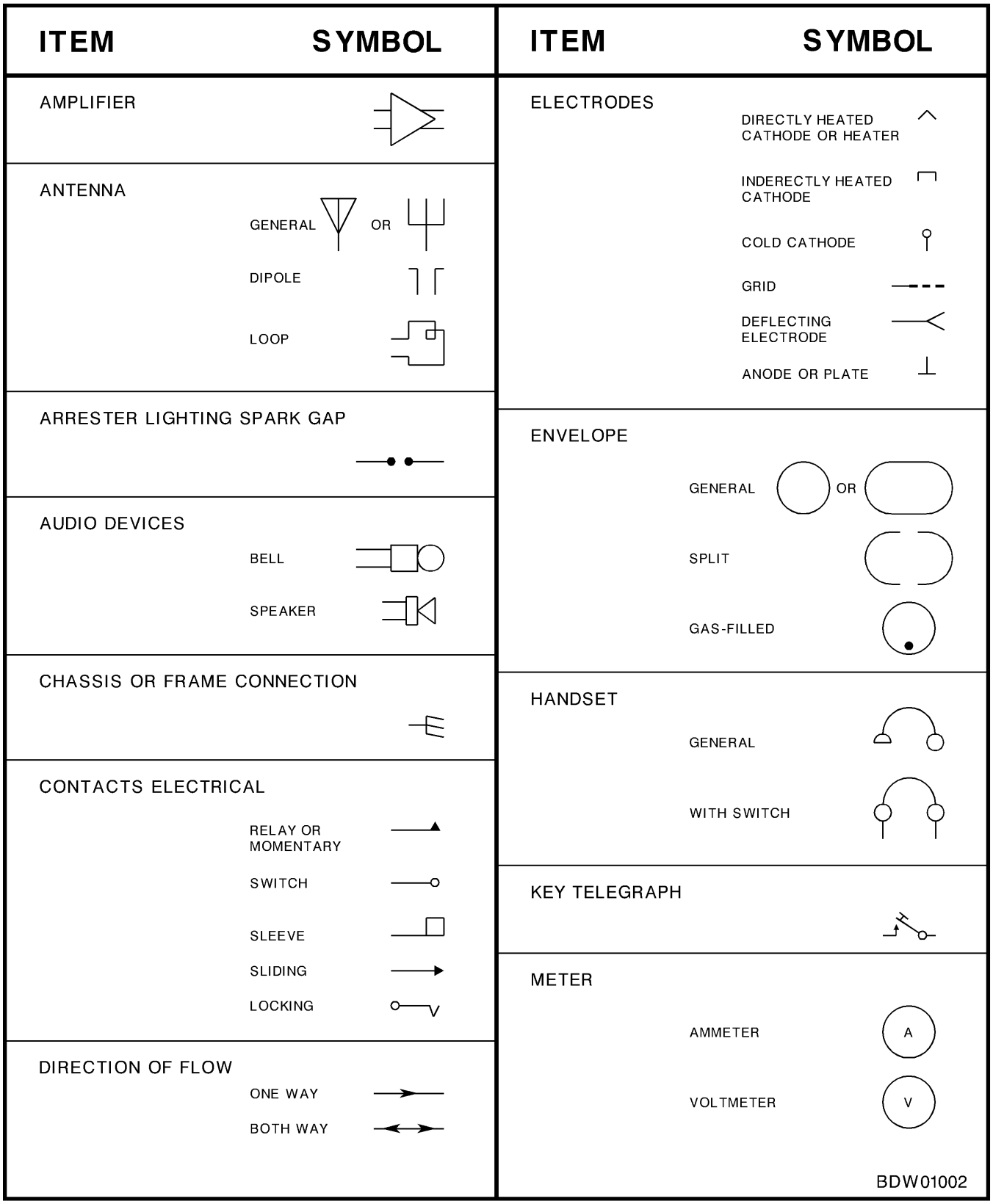

Figure 1-2 (Sheet 1 of 6) Drawing Symbol Chart

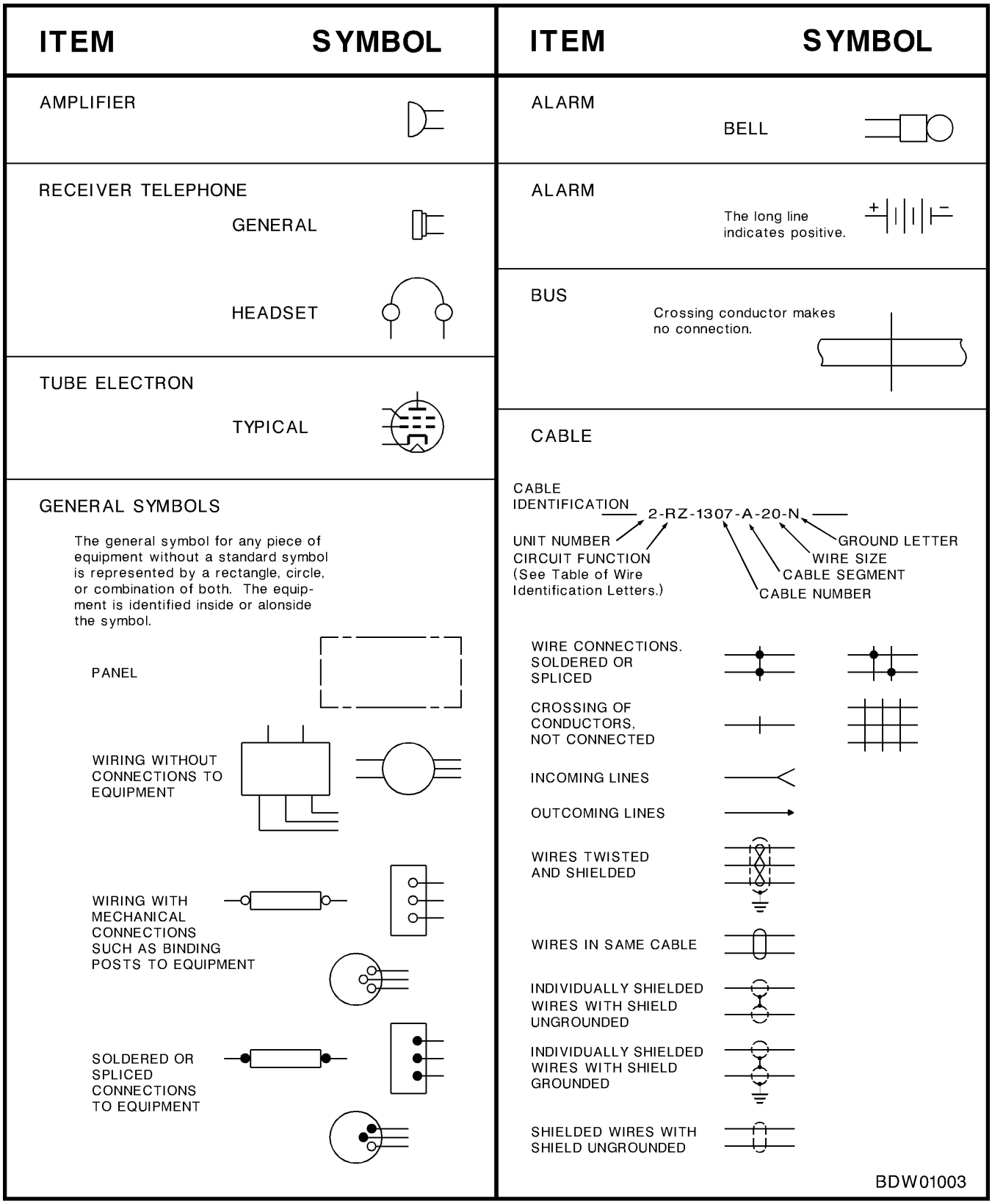

Figure 1-2 (Sheet 2 of 6) Drawing Symbol Chart

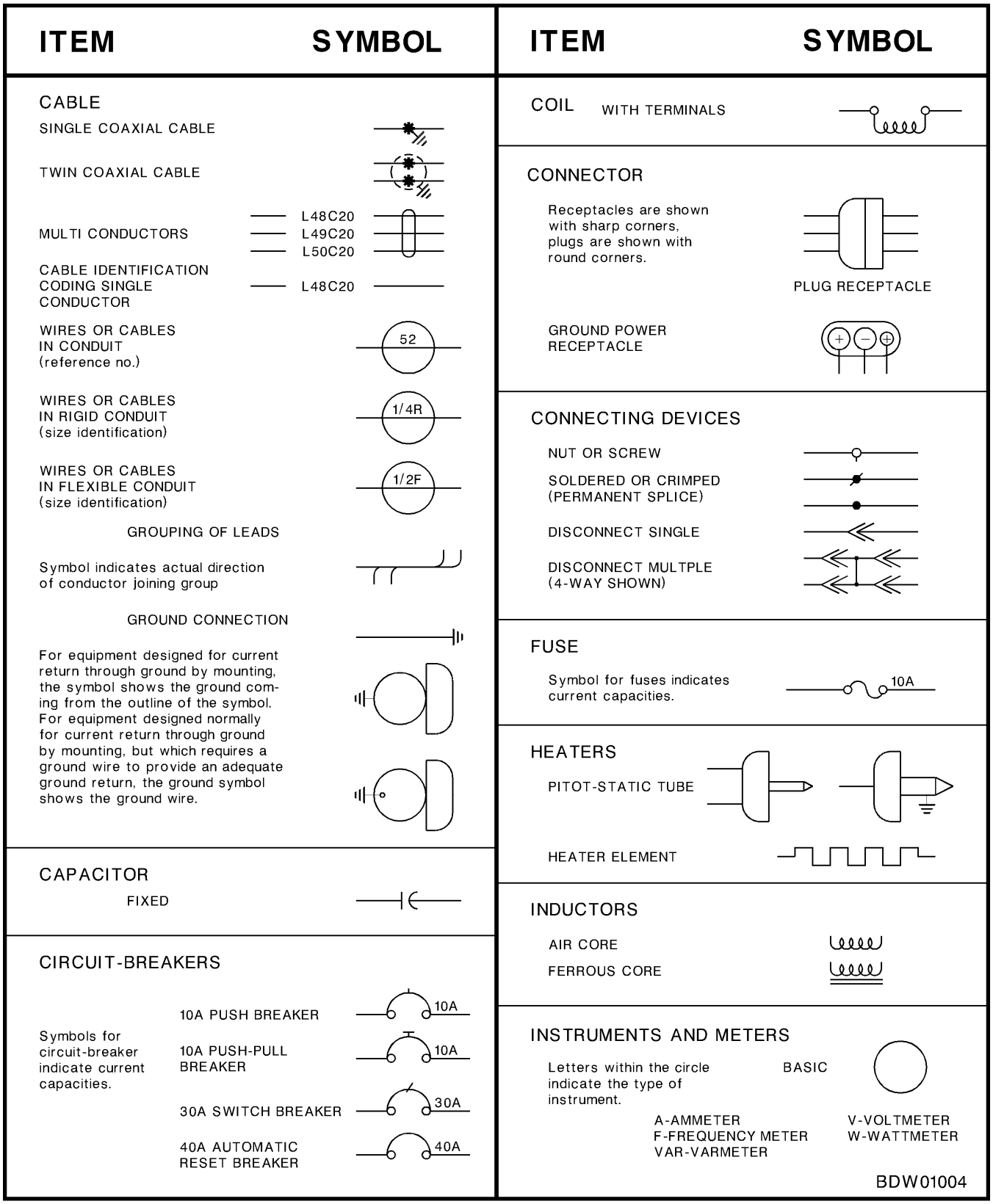

Figure 1-2 (Sheet 3 of 6) Drawing Symbol Chart

ITEM	SYMBOL	ITEM	SYMBOL

LAMP

BALLAST

ILLUMINATING

JEWELLED INDICATOR WARNING LIGHT

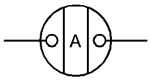

JEWELLED INDICATOR OR WARNING LIGHT WITH PUSH-TO-TEST CIRCUIT

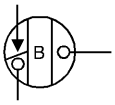

Following letters in the symbol indicate colour

A - AMBER	G - GREEN
B - BLUE	OP - OPALESCENT
C - CLEAR	O - ORANGE
FL - FLUORESCENT	R - RED
	W - WHITE

MACHINE ROTATING

REVERSIBLE MOTOR

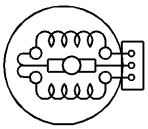

ROTARY EQUIPMENT WITH PLUG CONNECTOR (basic)

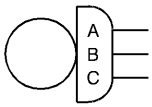

ROTARY EQUIPMENT WITH TERMINALS (basic)

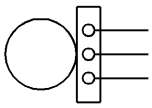

RECTIFIERS

FULL-WAVE

HALF-WAVE

RELAYS

All contacts are indicated as if the relay was in the de-energized position.

SINGLE-POLE SINGLE-THROW (SPST) (Single contact.)

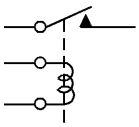

SINGLE-POLE SINGLE-THROW (SPST) (Single contact.)

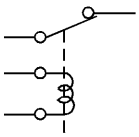

SINGLE-POLE SINGLE-THROW (SPST) (Double contacts.)

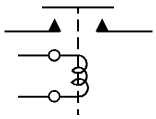

SINGLE-POLE DOUBLE-THROW (SPDT) (Single contact.)

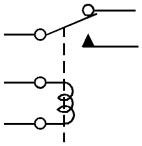

SINGLE-POLE DOUBLE-THROW (SPDT) (Double contacts.)

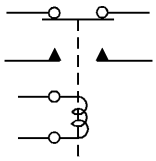

DOUBLE POLE SINGLE-THROW (DPST)

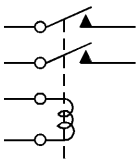

BDW01005

Figure 1-2 (Sheet 4 of 6) Drawing Symbol Chart

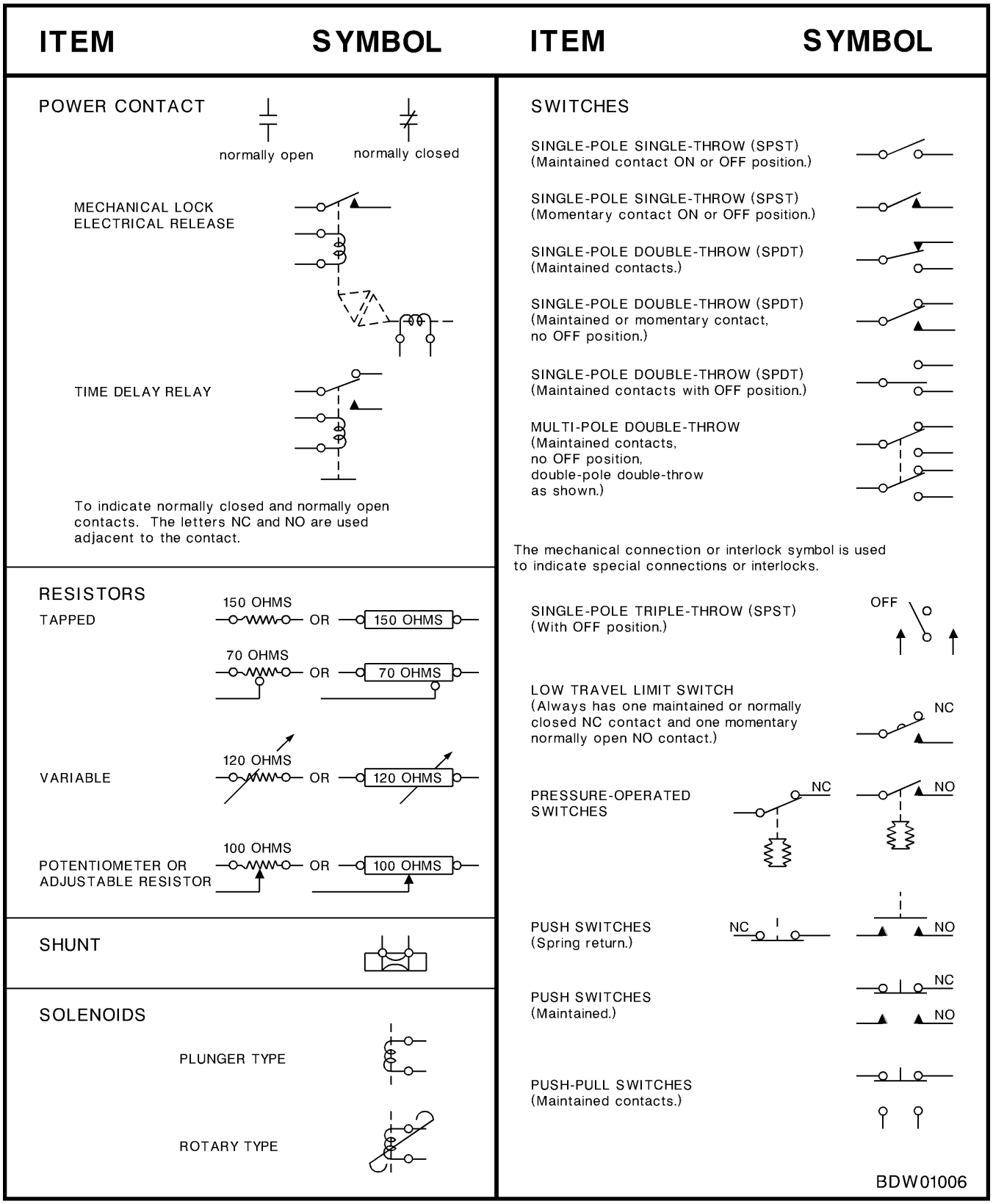

Figure 1-2 (Sheet 5 of 6) Drawing Symbol Chart

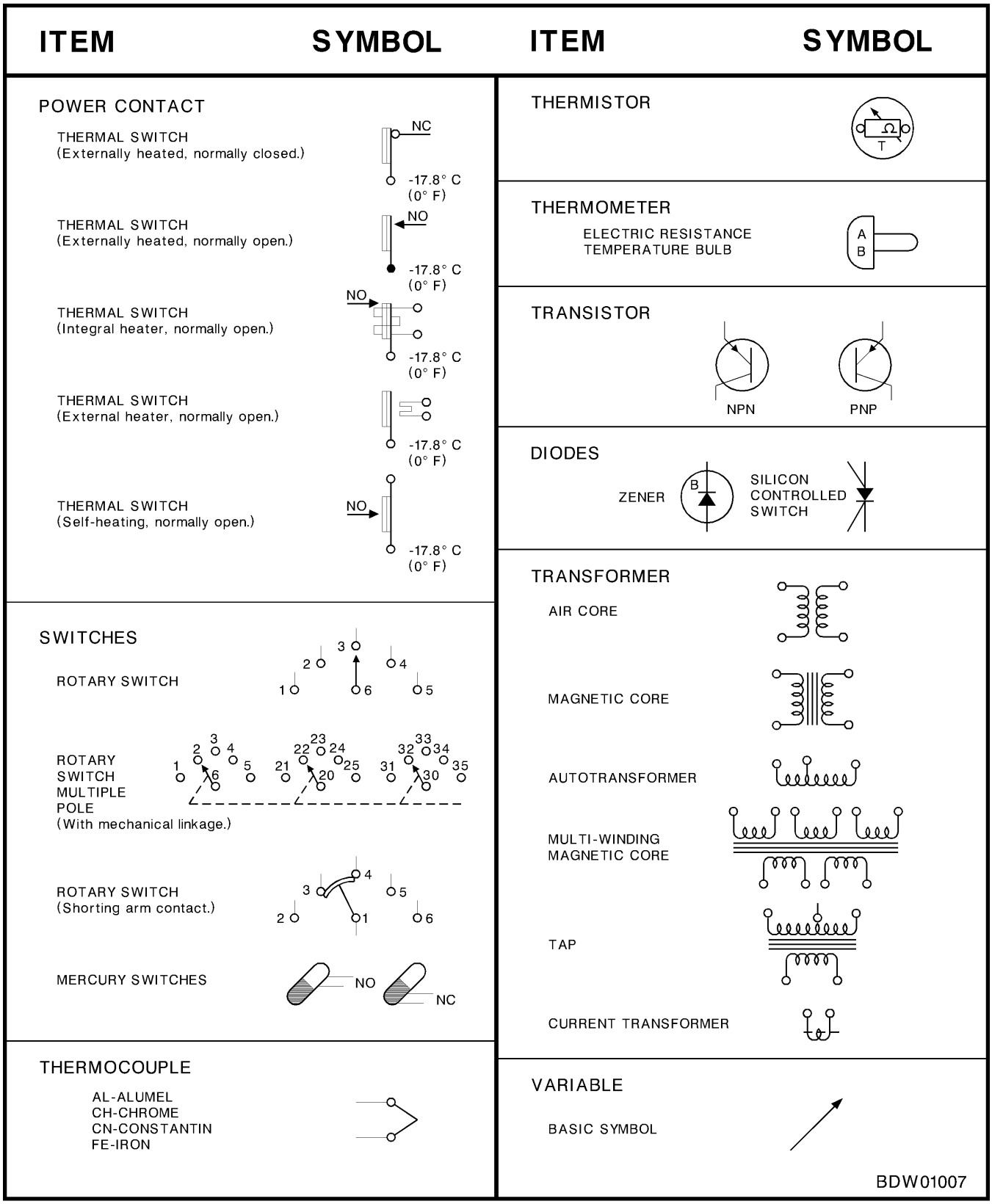

Figure 1-2 (Sheet 6 of 6) Drawing Symbol Chart

Designator No.	Description / Location	Part No.	Item No.
A1	Nose Disc. Comp.	NW4528459	115
AFL1	Master Strain Gauge / AFT Fuselage	DTD2684-1	35
AFL2	Back-up Strain Gauge / AFT Fuselage	DTD2684-1	35
AR1FC	A2/C, Compass Amplifier	653278	7
AR2FC	CRA-1, Compass Repeater Amplifier	INST8-7	89
AR2WB	Overheat Detection Control Unit	227-28-5A	114
AR3WB	Fire and Overheat Control Unit	377-28-2A	113
B1C	Aileron Trim Tab Actuator	R422M22-3	58
B1EF	Shut-Off Valve	AV16E1274	28
B1FD	Stick Control Shaker / LH Stick Control	C75502	106
B1HA	Shut-Off Valve	321682-1-1	28
B1HB	Windshield De-Ice Valve	321682-1-1	29
B1M	Canopy Actuator	41A-92010-800	97
B1MA	RH, Seat Actuator Assy	R5164M1	69
B1Q	Fuel Booster Pump	RR12060B	134
B2C	Elevator Trim Actuator	R422M25-1	41
B2HA	Cabin Safety Valve	103308-1	90
B2HB	Demist Valve	321094-3-1	95
B2MA	LH, Seat Actuator Assy	R5164M1	69
B2Q	Fuel Shut-Off Valve	AV16B1692D	131
B3HA	Modulating Valve	321682-1-1	30
B4HA	Anti-Ice Valve	11A00240P03	45
B5HA	Zone 2 Cooling Valve	104260	36
BT1P	Battery Ni-cad, RH	30242-002	80

Figure 1-3 (Sheet 1 of 42) Electrical Equipment Location/Reference Designator List

Designator No.	Description / Location	Part No.	Item No.
BT2P	Battery Ni-cad, LH	30242-002	4
C1DC	Fuel Qty Forward Tank Probe	FG220A217	135
C1P	Disc Comp Box Ckpt Capacitor / Cockpit	M39022/10E205FR	106
C2P	Disc Comp Box Ckpt Capacitor / Cockpit	M39022/10E205FR	106
C3DC	Fuel Qty Centre Tank Probe	FG250A45	130
C4DC	0.1uF, 100 VDCW Capacitor (Disc Comp Box Nose)	M39022/10A104FR	115
CB10M	5A, Canopy Control Circuit Breaker / Lower Cct Bkr Pnl	MS25244-5	1
CB10P	25A, Ckpt Ess Circuit Breaker / Lower Cct Bkt Pnl	MS25244-25	1
CB11P	50A, Ckpt Ess Circuit Breaker / Lower Cct Bkr Pnl	MS25244-50	1
CB14P	5A, S/P Control	MS25244-5	22
CB1AA	7.5A, Aux Tank Jett Circuit Breaker / Centre Console	MS25244-7.5	22
CB1C	5A, Alt Elev Trim Circuit Breaker / Centre Console	MS15244-5	22
CB1DA	5A, Wing Flap Posn Circuit Breaker / Centre Console	MS25244-5	22
CB1DB	5A, Hydraulic Press Circuit Breaker / Centre Console	MS22073-3	22
CB1DC	3A, Fuel Qty Circuit Breaker / Centre Console	MS22073-3	22
CB1DD	5A, Reg Acclrm Circuit Breaker / Nose Compartment	MS25244-5	3
CB1EA	1A, Fat Mon Circuit Breaker / Centre Console	MS22073-1	22
CB1EB	5A, Eng Oil Press Ind Circuit Breaker / Centre Console	MS22073-3	22
CB1EE	5A, Fuel Low Press Circuit Breaker / Centre Console	MS25244-5	22
CB1EF	5A, Ext Tank Jett Circuit Breaker / Centre Console	MS25244-5	22
CB1EX	5A, Xckpt Control Circuit Breaker / Centre Console	MS25244-5	22
CB1F	5A, Servoed Altm Circuit Breaker / Centre Console	MS25244-5	22
CB1FA	5A, Turn & Slip Ind LH Circuit Breaker / Centre Console	MS25244-5	22
CB1FC	5A, Compass Amp Circuit Breaker / Centre Console	MS25244-5	22

Figure 1-3 (Sheet 2 of 42) Electrical Equipment Location/Reference Designator List

Designator No.	Description / Location	Part No.	Item No.
CB1FD	5A, Stall Warn Circuit Breaker / Centre Console	MS25244-5	22
CB1G	5A, Nose WH Steer Circuit Breaker / Centre Console	MS25244-5	22
CB1GA	5A, Grd Safety Circuit Breaker / Centre Console	MS25244-5	22
CB1HA	5A, Air Cond SH Off Circuit Breaker / Centre Console	MS25244-5	22
CB1HB	5A, Wind De-Ice Circuit Breaker / Centre Console	MS25244-5	22
CB1J	5A, Engine Ignition Circuit Breaker / Centre Console	MS25244-5	22
CB1K	5AM Eng Start Cont Circuit Breaker / Centre Console	MS25244-5	22
CB1L	5A, Nav Lite Circuit Breaker / Centre Console	MS25244-5	22
CB1M	15A, Canopy Act Circuit Breaker / Lower Cct Bkr Pnl	MS25244-15	1
CB1MA	7.5, Seat Adj RH Circuit Breaker / Centre Console	MS25244-7.5	22
CB1MR	1A, LMS WOW Circuit Breaker / Lwr CB Pnl	MS22073-1	1
CB1Q	15A, Fuel Booster Pump Pwr Circuit Breaker / Centre Console	MS25244-15	22
CB1SG	7.5A, Smoke Generation / Centre Console	MS25244-7.5	22
CB1TG	1A, GPS/Centre Console	MS22073-1	22
CB1V	10A, No. 1 Inverter O/P Circuit Breaker / Centre Console	MS25244-10	22
CB1WA	5A, Master Warning Circuit Breaker / Centre Console	MS25244-5	22
CB1WB	5A, Overh & Fire Det Circuit Breaker / Centre Console	MS25244-5	22
CB2C	5A, Alt Ail Trim Circuit Breaker / Centre Console	MS25244-5	22
CB2DC	5A, Low Level Fuel Circuit Breaker / Centre Console	MS25244-5	22
CB2F	2A, Servoed Altm Circuit Breaker / Centre Console	MS22073-2	22
CB2FA	5A, Turn & Slip Ind RH Circuit Breaker / Centre Console	MS25244-5	22
CB2FC	5A, Compass Distr Circuit Breaker / Centre Console	MS25244-5	22
CB2FD	3A, Stall Warning Circuit Breaker / Centre Console	MS22073-3	22

Figure 1-3 (Sheet 3 of 42) Electrical Equipment Location/Reference Designator List

Designator No.	Description / Location	Part No.	Item No.
CB2G	5A, LD Gear Cont Circuit Breaker / Centre Console	MS25244-5	22
CB2HA	5A, Cockpit Temp Circuit Breaker / Centre Console	MS22073-3	22
CB2HB	5A, Wind Demist Circuit Breaker / Centre Console	MS25244-5	22
CB2K	5A, Batt Start Circuit Breaker / Lower Cct Bkr Pnl	MS25244-5	1
CB2L	7.5A, Land & Taxi Lite Circuit Breaker / Centre Console	MS25244-7.5	22
CB2M	5A, Canopy Warn Circuit Breaker / Centre Console	MS25244-5	22
CB2MA	7.5, Seat Adj LH Circuit Breaker / Centre Console	MS25244-5	22
CB2MR	3A, LMS DC Circuit Breaker / Lwr CB Pnl	MS22073-3	1
CB2P	15A, Gen Field Circuit Breaker / Centre Console	MS25244-15	22
CB2RV	3A, VHF PTT / Centre Console	1500-059-3	22
CB2SG	5A, Smoke Fail Safe / Centre Console	MS25244-5	22
CB2V	10A, No. 2 Inverter O/P Circuit Breaker / Centre Console	MS25244-10	22
CB2WB	5A, OV Heat Detect Circuit Breaker / Centre Console	MS25244-5	22
CB3C	5A, Speed Brake Circuit Breaker / Centre Console	MS25244-5	22
CB3FC	5A, Drmi LH Circuit Breaker / Centre Console	MS25244-5	22
CB3G	5A, Land Gear Warn Circuit Breaker / Centre Console	MS25244-5	22
CB3HA	A/I Pitot Stall Warn Circuit Breaker / Centre Console	MS25244-15	22
CB3L	20A, Land Light Power Circuit Breaker / Centre Console	MS25244-20	22
CB3P	5A, Gen Reset Circuit Breaker / Centre Console	MS25244-5	22
CB3V	5A, Inv Fail Inv Circuit Breaker / Centre Console	MS25244-5	22
CB3X	5A, Phase Adapter, No. 1 Circuit Breaker / Centre Console	MS25244-5	22
CB4C	5A, Elev & Ail Trim Circuit Breaker / Centre Console	MS25244-5	22
CB4G	5A, Land Gear Pos Circuit Breaker / Centre Console	MS25244-5	22

Figure 1-3 (Sheet 4 of 42) Electrical Equipment Location/Reference Designator List

Designator No.	Description / Location	Part No.	Item No.
CB4HA	5A, Eng Anti Ice Circuit Breaker / Centre Console	MS25244-5	22
CB4L	5A, Console Lite Circuit Breaker / Centre Console	MS25244-5	22
CB4P	5A, Gen Fail Circuit Breaker / Centre Console	MS25244-5	22
CB4V	5A, AC Power Circuit Breaker / Lower Cct Bkr Pnl	MS25244-5	1
CB4X	2A, Phase Adaptor, No. 2 Circuit Breaker / Centre Console	MS22073-2	22
CB5FC	3A, Course Ind Circuit Breaker / Centre Console	MS22073-3	22
CB5HA	5A, Zone 2 Cooling Circuit Breaker / Lower Cct Bkr Pnl	MS25244-5	1
CB5L	5A, Inst Panel Lite Circuit Breaker / Centre Console	MS25244-5	22
CB5V	5A, AC Power Circuit Breaker / Lower Cct Bkr Pnl	MS25244-5	1
CB6HA	5A, Air Cond Circuit Breaker / Centre Console	MS25244-5	22
CB6L	5A, Coll Light Bott Circuit Breaker / Centre Console	MS25244-5	22
CB6P	25A, Ckpt Ess Circuit Breaker / Lower Cct Bkr Pnl	MS25244-25	1
CB7L	5A, A/Col Lite Top Circuit Breaker / Centre Console	MS25244-5	22
CB7P	50A, Ckpt Ess Circuit Breaker / Lower Cct Bkr Pnl	MS25244-50	1
CB8L	5A, Misc Lites Circuit Breaker / Centre Console	MS25244-5	22
CB8P	25A, Ckpt Ess Circuit Breaker / Lower Cct Bkr Pnl	MS25244-25	1
CB9P	50A, Ckpt Ess Circuit Breaker / Lower Cct Bkr Pnl	MS25244-50	1
CR100L	Diode (Compass Lighting) (Disc Comp Box Ckpt)	JAN1N3613	106
CR1EF	Diode (Fuel) (Disc Comp Box Ckpt)	JAN1N3613	106
CR1G	Diode (Landing Gear) (Disc Comp Box Ckpt)	JAN1N3612	106
CR1G	Diode (N/W Steering) / N/W Steering Valve	591841-1	111
CR1HA	Diode (Air Cond) (Disc Comp Box Ckpt)	JAN1N3612	106
CR1HB	Diode (Wind De-Ice) (Disc Comp Box Ckpt)	JAN1N5625	106

Figure 1-3 (Sheet 5 of 42) Electrical Equipment Location/Reference Designator List

Designator No.	Description / Location	Part No.	Item No.
CR1K	Diode (Eng Start) (Disc Comp Box Nose)	JAN1N3612	115
CR1L	Diode (Lighting) (Disc Comp Box Nose)	JAN1N1614	115
CR1P	Diode (DC Supply) (Disc Comp Box Nose)	JAN1N5625	115
CR2G	Diode (Landing Gear) (Disc Comp Box Ckpt)	JAN1N3612	106
CR2K	Diode (Eng Start) (Disc Comp Box Ckpt)	JAN1N5625	106
CR2L	Diode (Lighting) (Disc Comp Box Nose)	JANTX1N3613	115
CR2P	Diode (DC Power) (Disc Comp Box Nose)	JAN1N5625	115
CR3C	Diode (Ckpt Comp Box) (Disc Comp Box Ckpt)	JAN1N3612	106
CR3G	Diode (Landing Gear) (Disc Comp Box Ckpt)	JAN1N3612	106
CR3K	Diode (Eng Start) (Disc Comp Box Ckpt)	JAN1N1614	106
CR3P	Diode (DC Power) (Disc Comp Box Nose)	JAN1N5625	115
CZ1A	Transient Supr (Inv Power) / Nose Area	PHP24	3
CZ2A	Transient Supr (Inv Power) / Nose Area	PHP24	3
DS100L	Bulb (Inst Panel Shd Fld) / Instr Pnl	MS25069-1495	85
DS101L	Bulb (Inst Panel Shd Fld) / Instr Pnl	MS25069-1495	92
DS102L	Bulb (Inst Panel Shd Fld) / Instr Pnl	MS25069-1495	92
DS103L	Bulb (Inst Panel Shd Fld) / Instr Pnl	MS25069-1495	92
DS104L	Bulb (Inst Panel Shd Fld) / Instr Pnl	MS25069-1495	92
DS105L	Bulb (Ldg Gear Cont Panel) / Instr Pnl	MS25237-327	92
DS106L	Bulb (Ldg Gear Cont Panel) / Instr Pnl	MS25237-327	92
DS107L	Bulb (Ldg Gear Cont Panel) / Instr Pnl	MS25237-327	92
DS108L	Bulb (Airspeed Indicator) / Instr Pnl	MS25237-327	92
DS109L	Bulb (Airspeed Indicator) / Instr Pnl	MS25237-327	92
DS10L	Light Assy (Attitude Indicator) / Instr Pnl	B6611C	92

Figure 1-3 (Sheet 6 of 42) Electrical Equipment Location/Reference Designator List

Designator No.	Description / Location	Part No.	Item No.
DS10WA	Bulb (Master Warning) / Instr Pnl	MS25237-327	92
DS110L	Bulb (Attitude Indicator) / Instr Pnl	MS25237-327	92
DS111L	Bulb (Attitude Indicator) / Instr Pnl	MS25237-327	92
DS112L	Bulb (Altimeter) / Instr Pnl	MS25237-327	92
DS113L	Bulb (Altimeter) / Instr Pnl	MS25237-327	92
DS116L	Bulb (Radio Mag Indicator / Instr Pnl)	MS25237-327	92
DS118L	Bulb (Vert Speed Indicator) / Instr Pnl	MS25237-327	92
DS119L	Bulb (Vert Speed Indicator) / Instr Pnl	MS25237-327	92
DS11L	Light Assy (Altimeter) / Instr Pnl	B6610C	92
DS120L	Bulb (Machmeter) / Instr Pnl	MS25237-327	92
DS122L	Bulb (Turn Slip Indicator) / Instr Pnl	MS25237-327	92
DS124L	Bulb (Clock) / Instr Pnl	MS25237-327	92
DS126L	Bulb (Tachometer) / Instr Pnl	MS25237-327	92
DS128L	Bulb (Ext Temp Indicator) / Instr Pnl	MS25237-327	92
DS12L	Light Assy (Tac Course Indicator) / Instr Pnl	B6614C	92
DS130L	Bulb (Oil Press Indicator) / Instr Pnl	MS25237-327	92
DS132L	Bulb (Hyd Press Indicator) / Instr Pnl	MS25237-327	92
DS134L	Bulb (Flap Pos Indicator) / Instr Pnl	MS25237-327	92
DS136L	Bulb (Fuel Qty Indicator) / Instr Pnl	MS25237-327	92
DS138L	Bulb (OX Press Indicator) / Instr Pnl	MS25237-327	92
DS140L	Bulb (Cab Alt Indicator) / Instr Pnl	MS25237-327	92
DS145L	Bulb (Canopy) / Instr Pnl	MS25237-327	92
DS146L	Bulb (Canopy) / Instr Pnl	MS25237-327	92
DS147L	Bulb (OX Regulator) / Instr Pnl	MS25237-327	92

Figure 1-3 (Sheet 7 of 42) Electrical Equipment Location/Reference Designator List

Designator No.	Description / Location	Part No.	Item No.
DS148L	Bulb (OX Regulator) / Instr Pnl	MS25237-327	92
DS149L	Bulb (Airspeed Indicator) / Instr Pnl	MS25237-327	92
DS14L	Light Assy (Vert Speed Indicator) / Instr Pnl	B6610C	92
DS150L	Bulb (Airspeed Indicator) / Instr Pnl	MS25237-327	92
DS151L	Bulb (Attitude Indicator) / Instr Pnl	MS25237-327	92
DS152L	Bulb (Attitude Indicator) / Instr Pnl	MS25237-327	92
DS153L	Bulb (Altimeter) / Instr Pnl	MS25237-327	92
DS154L	Bulb (Altimeter) / Instr Pnl	MS25237-327	92
DS155L	Bulb (Tac Course Indicator) / Instr Pnl	MS25237-327	92
DS156L	Bulb (Tac Course Indicator) / Instr Pnl	MS25237-327	92
DS157L	Bulb (Rad Mag Indicator) / Instr Pnl	MS25237-327	92
DS159L	Bulb (Vert Speed Indicator) / Instr Pnl	MS25237-327	92
DS160L	Bulb (Vert Speed Indicator) / Instr Pnl	MS25237-327	92
DS161L	Bulb (Machmeter) / Instr Pnl	MS25237-327	92
DS163L	Bulb (Turn Slip Indicator) / Instr Pnl	MS25237-327	92
DS193L	Bulb (Taxi Light)	MS24517-4570	85
DS193LEX	Lamp (Taxi Light - Snowbird)	MS25241-4553	85
DS194L	Bulb (Stand-by Compass) / Cockpit	MS25237-327	106
DS1EF	Light Assy (RH Low Fuel Press Light) / Centre Console	MS25041-4	22
DS1EX	Light Assy (Master Caution) / RH Instr Pnl	1227-2	92
DS1G	Light Assy (LD Gear Unsafe) / Instr Pnl	MS25041-6	92
DS1K	Lampholder (Air Start Light) / Instr Pnl	508-7545-504	92
DS1L	Light Assy (Instr Panel Shd Fld) / Instr Pnl	MS25027-2	92
DS1SG	Light Assy (Smoke ON) / Centre Windscreen	MS25041-7	92

Figure 1-3 (Sheet 8 of 42) Electrical Equipment Location/Reference Designator List

Designator No.	Description / Location	Part No.	Item No.
DS1WA	Light Assy (Master Caution) / Instr Pnl	1227-2	92
DS205L	Bulb (Turn Slip Indicator) / Instr Pnl	MS25237-327	92
DS206L	Bulb (Turn Slip Indicator) / Instr Pnl	MS25237-327	92
DS207L	Light Assy (Stall Wrn Pnl) / LH Console	A7165-1-327	73
DS208L	Light Assy (Stall Wrn Pnl) / LH Console	A7165-1-327	73
DS209L	Bulb (Stall Wrn Pnl) / LH Console	MS25237-327	73
DS210L	Bulb (Stall Wrn Pnl) / LH Console	MS25237-327	73
DS215L	Light Assy (Machmeter) / Instr Pnl	A8790C2-327	92
DS16L	Light Assy (Clock) / Instr Pnl	B6610C	92
DS217L	Light Assy (Tachometer) / Instr Pnl	A6815C-24	92
DS218L	Light Assy (Exh Temp Indicator) / Instr Pnl	A6815C-24	92
DS219L	Light Assy (Oil Press Indicator) / Instr Pnl	A6815C-24	92
DS220L	Light Assy (Hyd Press Indicator) / Instr Pnl	A6815C-24	92
DS221L	Light Assy (Flap Pos Indicator) / Instr Pnl	A6815C-24	92
DS222L	Light Assy (Fuel Qty Indicator) / Instr Pnl	A6815C-24	92
DS223L	Light Assy (OX Press Indicator) / Instr Pnl	A6815C-24	92
DS224L	Light Assy (Cab Alt Indicator) / Instr Pnl	A6815C-24	92
DS227L	Light Assy (Machmeter) / Instr Pnl	B6610C	92
DS229L	Bulb / Instr Pnl	MS25237-327	92
DS233L	Light Assy (Letdown Card Hold) / Cockpit	33645-1495	106
DS234L	Light Assy (Bailout Override Panel) / Cockpit	A7165-1-327	106
DS235L	Light Assy (Bailout Override Panel) / Cockpit	A7165-1-327	106
DS240L	Light Assy (Engine Start Cont Panel) / Cockpit	A7165-1-327	106
DS241L	Light Assy (Engine Start Cont Panel) / Cockpit	A7165-1-327	106

Figure 1-3 (Sheet 9 of 42) Electrical Equipment Location/Reference Designator List

Designator No.	Description / Location	Part No.	Item No.
DS242	Light Assy (Engine Start Cont Panel) / Cockpit	A7165-1-327	106
DS29L	Light Assy (Canopy) / Instr Pnl	A7165-1-327-CC	92
DS2EF	Light Assy (LH Low Fuel Press Light) / Centre Console	MS25041-4	22
DS2EX	Light Assy (Master Warning) / RH Instr Pnl	1227-1	92
DS2G	Lamp (Land Gear Unsafe) / Instr Pnl	MS25237-327	92
DS2K	Lamp Cartridge (Air Start) / Instr Pnl	MS18235-3RT	92
DS2L	Light Assy (Inst Panel Shd Fld) / Instr Pnl	MS25027-2	92
DS2SG	Light Assy (Smoke ON) / RH & LH Glare Shield	MS25041-4	92
DS2WA	Light Assy (Master Warning) / Instr Pnl	1227-1	92
DS30L	Light Assy (Canopy) / Instr Pnl	A7165-1-327-CC	92
DS31L	Light Assy (Airspeed Indicator) / Instr Pnl	B6610C	92
DS32L	Light Assy (Attitude Indicator) / Instr Pnl	B6611C	92
DS33L	Light Assy (Altimeter) / Instr Pnl	B6610C	92
DS36L	Light Assy (Vert Speed Indicator) / Instr Pnl	B6610C	92
DS38L	Light Assy (Turn Slid Indicator) / Instr Pnl	B6602A-C	92
DS39L	Light Assy (RH Utility) / Cockpit	B6810A	106
DS3G	Light Assy (Ldg Gr Safe Obs Light)	30-1591-1	86
DS3L	Light Assy (Inst Panel Shd Fld) / Instr Pnl	MS25027-2	92
DS3RNV	Ind Light Assy (BL Marker) / Instr Pnl	MS25041-10	92
DS3WA	Bulb (Master Warning) / Instr Pnl	MS25237-327	92
DS40L	Light Assy (LH Utility) / LH Console	D6810A	73
DS41L	Light Assy (LH Facia Pnl) / LH Facia Pnl	A7165-1-327-CC	76
DS42L	Light Assy (LH Facia Pnl) / LH Facia Pnl	A7165-1-327-CC	76
DS43L	Light Assy (Loadmeter Light) / Cockpit	A7165-1-327	106

Figure 1-3 (Sheet 10 of 42) Electrical Equipment Location/Reference Designator List

Designator No.	Description / Location	Part No.	Item No.
DS45L	Light Assy (Throttle Assy) / LH Console	A7165-1-327	73
DS46L	Light Assy (Throttle Assy) / LH Console	A7165-1-327	73
DS47L	Light Assy (Elev Trim Panel Lights) / LH Console	A7165-1-327	73
DS48L	Light Assy (RH Facia Pnl) / RH Facia Pnl	A7165-1-327	10
DS49L	Light Assy (RH Facia Pnl) / RH Facia Pnl	A7165-1-327	10
DS4G	Lamp (LDG Gr Safe Obs Light) / Instr Pnl	A-4174-24C	86
DS4L	Light Assy (Instr Pnl Shd fld) / Instr Pnl	MS25027-2	92
DS4WA	Bulb (Master Warning) / Instr Pnl	MS25237-327	92
DS52L	Light Assy (Ctr Throttle Lt) / Centre Console	A7165-1-327	22
DS53L	Light Assy (Ctr Throttle Lt) / Centre Console	A7165-1-327	22
DS54L	Light Assy (Ctr Throttle Lt) / Centre Console	A7165-1-327	22
DS55L	Light Assy (Air Cond Edge Light) / Centre Console	A7165-1-327	22
DS56L	Light Assy (Air Cond Edge Light) / Centre Console	A7165-1-327	22
DS57L	Light Assy (UP Anti-Col)	G8400A-8-24	33
DS58L	Light Assy (Low Anti-Col)	G8400A-8-24	70
DS59L	Light Assy (RH Landing)	MS25241-4553	20
DS5L	Light Assy (Inst Panel Shd fld) / Instr Pnl	MS25027-2	92
DS5WA	Bulb (Master Warning) / Instr Pnl	MS25237-327	92
DS60L	Light Assy (LH Landing)	MS25241-4553	63
DS61L	Light Assy (RH Nav Light)	AN3033-15	18
DS62L	Light Assy (LH Nav Light)	AN3033-14	59
DS63L	Light Assy (Tail Nav Light)	MS25219-3	39
DS64L	Light Assy / Instr Pnl	A7165-1-327	92
DS6EF	Lamp (Aux Fuel Cont) / Centre Console	MS25237-327	22
DS6L	Light Assy (LDG Gr Cont Pnl) / Instr Pnl	A7165-1-327-CC	92

Figure 1-3 (Sheet 11 of 42) Electrical Equipment Location/Reference Designator List

Designator No.	Description / Location	Part No.	Item No.
DS6WA	Bulb (Master Warning) / Instr Pnl	MS25237-327	92
DS7EF	Lamp (LH Low Fuel Press) / Centre Console	MS25237-327	22
DS7L	Light Assy (LDG Gr Cont Pnl) / Instr Pnl	A7165-1-327-CC	92
DS7WA	Bulb (Master Warning) / Instr Pnl	MS25237-327	92
DS8L	Light Assy (Landing Gear Cont Pnl) / Instr Pnl	A7165-1-327-CC	92
DS8WA	Bulb (Master Warning) / Instr Pnl	MS25237-327	92
DS9L	Light Assy (Airspeed Ind) / Instr Pnl	B6610C	92
DS9WA	Bulb (Master Warning) / Instr Pnl	MS25237-327	92
E10L	Mkr & Misc Cont Pnl / Instr Pnl	41A-50733	92
E1HA	Air Cond Cont Pnl / Centre Console	41A-52017-800	22
E1K	Eng & Acft Elect Cont Pnl / Centre Console	41A-51210	22
E2L	Aileron Trim Pnl / LH Console	41-50726-10	73
E2WB	Overheat Detection Unit Mount Assy	41531	114
E7LL	Dimming Relay & Resistor Dimming Pnl / Cockpit	41A-51222	106
F1FB	Fuse (1A, Attitude Ind RH) / Centre Console	MDL-1	22
F1V	Fuse (50A, No. 1 INV PWR) / Main Distr Pnl	FLLA	87
F2FB	Fuse (1A, No. 1 Phase Adap) / Centre Console	MDL 1	22
F2P	Fuse (150A, ESS Pwr) / Main Distr Pnl	FLLE	87
F2V	Fuse (50A, No. 2 Inv Pwr) / Main Distr Pnl	FLLA	87
F3P	Fuse (150A, ESS Pwr) / Main Distr Pnl	FLLE	87
F3FB	Fuse (1A, Attitude Ind LH) / Centre Console	MD-1	22
F4FB	Fuse (1A, No. 2 Phase Adap) / Centre Console	MDL-1	22
G1G	Landing Gear Alarm / RH Console	MIL-S-9320	11
G1J	Ignition Unit	37D401588P103	34

Figure 1-3 (Sheet 12 of 42) Electrical Equipment Location/Reference Designator List

Designator No.	Description / Location	Part No.	Item No.
G1L	Flasher (Nav Lights)	577-100	81
HR1HA	Pitot Tube Heater	AN5816-2	17
J1	Connector, Receptacle (Eng Disc, Oil Temp)	PT00SE22-21P	49
J10	Adapter, Connector (BH Disc FS149) / RH Console	SPB20-16PSW	13
J100L	Master Warn Dimming Socket, Relay / Centre Console	M12883/41-11	22
J10DC	Connector, Receptacle (Fuel Qty) / Fuel Tank	FB-40-E4	129
J10G	Connector, Receptacle (Weight OFF Nose WH)	MS3470L12-10S	82
J10L	Connector (Misc Controls) / Instr Pnl	107A	92
J10SG	Connector, Receptacle / Smoke Control Unit	MS3472L10-6P	74
J14EX	Connector, Receptacle (MLG Xckpt Cont) / Instr Pnl	MS3470L14-19P	76
J14G	Connector, Receptacle	MS3471L14-19P	107
J14RU	Connector, Receptacle (Auxiliary Override Panel) / Cockpit	MS3470L14-19P	22
J16	Adapter, Connector (BH Disc FS149) / Bulkhead	SPB22-41PSW	3
J1AA	Socket, Relay (Ext Tank Jettison) / Rly Pnl	M12883/41-11	102
J1C	Socket, Relay (Elev Overide) / Rly Pnl	M12883/41-11	102
J1DC	Socket, Relay (Fuel Qty) / Rly Pnl	S01048-8308	88
J1EX	Socket, Relay (MLG Cont) / LH Facia Rly Pnl	SO-1022-7129	76
J1F	Connector, Receptacle (Altimeter Test) / RH Console	MS3470L20-41S	13
J1FC	Socket, Relay (Compass) / Rly Pnl	M12883/41-11	96
J1FD	Connector, Receptacle (Lift Transducer)	MS3470L16-8S	16
J1G	Socket, Relay (LDG Gr Dwn Lk) / Rly Pnl	M12883/44-01	88
J1GA	Socket, Relay (No. 1 GND Safety) / RH Wing Fillet	M12883/40-13	23
J1HB	Socket, Relay (Wshld De-Ice)	M12883/45-01	26

Figure 1-3 (Sheet 13 of 42) Electrical Equipment Location/Reference Designator List

Designator No.	Description / Location	Part No.	Item No.
J1J	Connector, Receptacle (Eng Cont LH Console) / LH Console	MS3470L14-19P	75
J1K	Socket, Relay (Start Cont) / Rly Pnl	M12883/40-18	88
J1L	Connector (CCT Breaker Pnl) / Centre Console	107A	22
J1P	Connector, Receptacle (Ext Power)	MS3506-1A	51
J1RV	Socket, Relay (VHF PTT) / Centre Console	M12883/44-01	22
J1SG	Socket, Relay / Smoke Control Unit	SO-1000	74
J1TG	Connector, Receptacle (GPS) / Instr Pnl	MS3470L8-33S	92
J1WB	Connector, Receptacle (Fire & Overheat Det)	42990-00	121
J1X	Socket, Relay (No. 1 Fail Sense) / Rly Pnl	M12883/41-12	88
J2	Connector, Receptacle (Part of Engine) / Engine Bay	PT00SE12-35	31
J20J	Socket, Relay (Eng Control) / Rly Pnl	SO1048-8308	96
J20	Connector Receptacle / Bulkhead	MS3119E12-8	106
J201	Connector Receptacle (Left Wing Disc) / LH Wing	MS3470L22-21S	60
J202	Connector, Receptacle (Right Wing Disc) / RH Wing Fillet	MS3470L22-21S	23
J205	Connector, Receptacle (Nose Relay Panel) / Rly Pnl	MS3470L24-61P	88
J208	Connector, Receptacle (Engine Start Control Panel) / Centre Console	MS3470L18-32P	22
J209	Connector, Receptacle (Engine Start Control Panel) / Centre Console	MS3470L18-11P	22
J210	Connector, Receptacle (Aux Fuel Cont) / Ctr Console	MS3470L14-15P	22
J211	Connector, Receptacle (Air Cond Pnl) / Centre Console	MS3470L14-19P	22

Figure 1-3 (Sheet 14 of 42) Electrical Equipment Location/Reference Designator List

Designator No.	Description / Location	Part No.	Item No.
J212	Connector, Receptacle (Nose Relay Panel) / Rly Pnl	MS3470L24-31P	88
J217	Connector, Receptacle (Nose Discrete Component Box)	DAU-15P	115
J218	Connector, Receptacle (Nose Discrete Component Box)	DCU-37P	115
J219	Connector, Receptacle (Nose Discrete Component Box)	DCU-37P	115
J22	Adapter, Connector (Bulkhead Disc FS149)	SPB24-61PS	106
J220A	Connector, Receptacle (LCU No. 1) / Nose Area	DEMM9PD	119
J220B	Connector, Receptacle (LCU No. 2) / Nose Area	DEMM9PD	119
J220C	Connector, Receptacle (LCU No. 3) / Nose Area	DEMM9PD	119
J221	Connector, Receptacle (Ckpt Discrete Component Box) / Cockpit	DDU-50P	106
J222	Connector, Receptacle (Ckpt Discrete Component Box) / Cockpit	DCU-37P	106
J224	Connector, Receptacle (Nose Relay Panel) / Rly Pnl	MS3470L14-4P	88
J226	Connector, Receptacle (Nose Relay Pnl Strain Gauge Pri/Back-up Switches)	MS27473E22F35S	3
J227	Connector, Receptacle (OLM Aft Disc FS314.00)	MS3470L24-61P	122
J24	Adapter, Connector (Bulkhead Disc FS149)	SPB24-61PSW	106
J26	Adapter, Connector (Bulkhead Disc FS149)	SPB20-41PS	106
J28	Adapter, Connector (Bulkhead Disc FS149)	MS3119E24-61S(SR)	106
J2AA	Connector, Receptacle (LH Pylon Disc) / Pylon	MS3451L18-1S	64
J2C	Socket, Relay (Aileron Override) / Rly Pnl	M12883/41-11	102
J2DC	Junction Jack (Fuel Quantity) / LH Wing	5335-1	60
J2EX	Socket, Rly (Master Xckpt X'over Rly) / LH Facia Rly Pnl	SO-1022-7129	76
J2G	Socket, Relay (Landing Gear Uplock) / Rly Pnl	M12883/44-01	88
J2GA	Socket, Relay (No. 2 Gnd Safety) / Rly Pnl	M12883/44-01	88

Figure 1-3 (Sheet 15 of 42) Electrical Equipment Location/Reference Designator List

Designator No.	Description / Location	Part No.	Item No.
J2HB	Socket, Relay (Wshld De-Ice)	M12883/45-01	26
J2K	Socket, Relay (Nose Relay Panel) / Rly Pnl	M12883/44-01	88
J2L	Connector (Ckpt CCT Brkr Pnl) / Centre Console	107A	22
J2M	Connector, Receptacle (LH Press Disc) / Cockpit	MS3470L8-33S	106
J2P	Jack (Gen Volt Test) / Nose Area	AN3249-2	3
J2RN	Socket, Relay (Ind Selector) / Instr Pnl	M12883-44-01	92
J2SG	Socket, Relay / Smoke Control Unit	SO-1019-7125	74
J2SG	Connector Receptacle (Stn 314 FW Disc) / Aft Section	MS3450L14S-5P	
J2WB	Connector, Receptacle (Fire & Overheat Det)	42991-00	121
J2X	Socket, Relay (Inv Transfer) / Rly Pnl	M12883/41-12	88
J30	Adapter, Connector (BH Disc Aft, RH) / Cockpit	SPB16-8PS (003)	106
J32	Connector, Receptacle (BH Disc Aft, LH) / LH Wing	20AS132-3	60
J34	Connector, Receptacle (BH Disc Canted) / Cockpit	MS3470L12-3S	106
J36	Adapter, Connector (BH Disc (Canted)) / LH Wing Fillet	SPB22-21PS (003)	68
J38	Adapter, Connector (BH Disc (Canted)) / LH Wing	SPB20-39PS (003)	60
J3AA	Connector, Receptacle (RH Pylon) / Pylon	MS3451L18-1S	25
J3C	Socket, Relay (Elev Trim) / Rly Panel	M12883/45-01	102
J3DC	Connector, Receptacle (Fuselage Tank) / Fuel Tank	33-6206-1	129
J3EX	Socket, Relay (MLG Unsafe Ind Rly) / LH Facia Rly Pnl	SO-1024-7121	76
J3G	Socket, Relay (Gear Uplock)/ Rly Panel	M12883/40-18	88
J3GA	Socket, Relay (No. 3 Gnd Safety) / RH Wing Fillet	M12883/41-11	23
J3HA	Socket, Relay (S/O Valve Cont) / Rly Pnl	M12883/41-11	32
J3K	Socket, Relay (No. 1 Batt Start) / Rly Pnl	M12883/40-18	88

Figure 1-3 (Sheet 16 of 42) Electrical Equipment Location/Reference Designator List

Designator No.	Description / Location	Part No.	Item No.
J3L	Connector (CCT Brkr Pnl Lighting) / Centre Console	107A	22
J3P	Jack (Gen Test) / Nose Area	AN3249-1	3
J3SG	Socket, Relay / Smoke Control Unit	SO-1019-7125	74
J3WB	Connector, Receptacle (Fire & Overheat Det)	42991-00	123
J40	Connector, Receptacle (LH Wing Disc Compass) / LH Wing	SP00W10-6P (003)	60
J42	Adapter, Connector (BH Disc Canted) / RH Wing Fillet	SPB22-21PS (003)	23
J44	Adapter, Connector (BH Disc Canted) / RH Wing Fillet	SPB20-16PS (003)	23
J46	Adapter, Connector (Ldg Gr Touch Dwn Sw) / RH Wing Fillet	SPB20-39PS (003)	23
J4C	Connector, Receptacle (Aileron Trim Hinge) / LH Wing	M28748/4-C3AF1A	60
J4DC	Connector, Receptacle (Fuselage Tank) / Fuel Tank	20AS133-4	129
J4EX	Socket, Rly (Cont, Xckpt Xfr Rly No. 1) / LH Facia Rly Pnl	SO-1066-001	76
J4G	Connector, Receptacle (LDG Gr Touch Down Sw) / Rly Pnl	M12883/45-01	88
J4HA	Socket, Relay (Zone 2 Cooling Ind) / RH Wing Fillet	M12883/45-01	23
J4K	Socket, Relay / Rly Pnl	M12883/45-01	88
J4L	Connector (CCT Breaker Panel) / Centre Console	107A	22
J4SG	Socket, Relay / Smoke Control Unit	SO-1000	74
J4WB	Connector, Receptacle (Fire & Overheat Det)	42990-00	123
J4X	Socket, Relay / Rly Pnl	S01055-8690	88
J5C	Socket, Relay (Ail Trim Cont) / LH Wing	M12883/41-11	60
J5EX	Socket, Relay (Cont, Xckpt Xfr Rly No. 2) / LH Facia Rly Pnl	SO-1066-001	76
J5G	Connector, Receptacle (Ground Safety)	MS3470L12-10S	53
J5HA	Socket, Relay (Zone 2 Cooling Ind.) / RH Wing Fillet	M12883/41-11	23

Figure 1-3 (Sheet 17 of 42) Electrical Equipment Location/Reference Designator List

Designator No.	Description / Location	Part No.	Item No.
J5L	Connector (Engine Electrical Pnl) / Centre Console	107A	22
J5WB	Connector, Receptacle (Fire & Overheat Det)	42990-00	121
J60	Connector, Receptacle (BH Disc Trough)	MS3450KT20-27P	120
J61	Connector, Receptacle (Engine Comp Disc) / Engine Bay	MS3450KT24-12P	31
J6C	Socket, Relay (Elev Trim Cont) / AFT Fuselage	M12883/41-11	40
J6G	Connector, Receptacle (RH LDG Gr Weight Sw Disc)	MS3470L12-10S	61
J6L	Connector (Aileron Trim Pnl Light) / Cockpit	107A	106
J6MR	Connector, Receptacle DAU w/EMS / Pressure Bulkhead FS149.00	MS3472L14-12S	77
J6WB	Connector, Receptacle (Fire & Overheat Det)	42991-00	118
J6X	Socket, Relay Inverter Transfer) / Rly Pnl	M12883/40-13	88
J7	Connector, Receptacle (Under Floor FS185) / Cockpit	MS3470L14-19S	106
J70	Connector, Receptacle (Aft BH Disc)	MS3450KT20-27P	122
J7HA	Socket, Relay (Time Delay Cooling) / Rly Pnl	SO1055-8690	102
J7L	Connector, Receptacle (Quick Disc Canopy Light) / Ckpt	M641/6-1	106
J7MR	Connector, Receptacle (OLM w/EMS) DAU Brkt	MS3472W10-6S	84
J7P	Socket, Relay (Gen Fail Ind) / Rly Pnl	M12883/40-13	88
J7WB	Connector, Receptacle (Fire & Overheat Det)	42991-00	123
J8	Connector, Receptacle (Cont Column Disc-RH) / Cockpit	MS3470L14-19S	106
J8DC	Connector, Receptacle (Fuel Qty) / Fuel Tank	33-6206-1	129
J8HA	Socket, Relay (Time Delay Cooling) / Rly Pnl	S01055-8690	102
J8MR	Connector, Receptacle (OLM w/EMS) DAU Brkt	MS3472W10-6S	84
J8WB	Connector, Receptacle (Fire & Overheat Det)	42990-00	123

Figure 1-3 (Sheet 18 of 42) Electrical Equipment Location/Reference Designator List

Designator No.	Description / Location	Part No.	Item No.
J9	Connector, Receptacle (Instrument Panel) / Instr Pnl	MS3470L24-61P	92
J9DC	Connector, Receptacle (Fuel Qty) / Fuel Tank	20AS133-4	129
K10P	Relay (Series/Parallel Contactor)/Main Distr Pnl	A-848KBH	87
K100L	Relay (Master Warm Dimming) / Centre Console	M83536/10-024M	22
K11P	Relay (Battery Start No. 1) / Main Distr Pnl	AJ-A4N-176	87
K1AA	Relay (Ext Tank Jettison) / Rly Pnl	M83536/10-024M	102
K1C	Relay (Elev Override) / Rly Pnl	M83536/10-024M	102
K1DC	Relay (Time Delay, Fuel Qty)	TDH-8050-1602P	12
K1EX	Relay (MLG Cont) / LH Facia Rly Pnl	9223-4833	76
K1FC	Relay (Compass) / Rly Pnl	M83536/10-024M	96
K1G	Relay (Landing Gear Down Lock) / Rly Pnl	M83536/6-022M	88
K1GA	Relay (#1 Gnd Safety) / RH Wing Fillet	MS27400-17	23
K1HA	Relay (Cabin Air Inlet)	25830071	83
K1HB	Relay (Windshield De-Ice)	M83536/2-024	26
K1K	Relay (Start Control) / Rly Pnl	M402-D4B	88
K1L	Relay (Landing Gear Pwr) / RH Wing Fillet	M520-U5N-L	23
K1M	Relay, Canopy Cont (Canopy ″OPEN″) / Canopy Rly Pnl	M520-U5N-L	101
K1P	Relay (Gen Current Cutout Contactor)	AN3025-600 OR A702AP	65
K1Q	Relay (Fuel Booster Pump) / Nose Area	M520-U5N-L	3
K1RV	Relay (VHF PTT) / Centre Console	M83536/6-022M	22
K1SG	Relay / Smoke Control Unit	9220-4249	74
K1X	Relay (No. 1 Fail Sense) / Rly Pnl	MS27401-36	96
K20J	Relay (Air Start Time Delay)/RH Console	TDH-8070-2502	13
K2C	Relay (Aileron Override) / Rly Pnl	M83536/10-024M	101

Figure 1-3 (Sheet 19 of 42) Electrical Equipment Location/Reference Designator List

Designator No.	Description / Location	Part No.	Item No.
K2EX	Relay (Master Xckpt Cross-Over) / LH Facia Rly Pnl	9223-4833	76
K2G	Relay (LDG Gr Up Lk) / Rly Pnl	M83536/6-022M	88
K2GA	Relay (No. 2 Gnd Safety) / Rly Pnl	M83536/6-022M	88
K2HB	Relay (Wshld De-Ice)	M83536/2-024	26
K2K	Relay (Power Protection) / Rly Pnl	M83536/6-022M	88
K2L	Relay (LDG Lt Pwr) / LH Wing Fillet	M520-U5N-L	68
K2M	Relay Canopy Cont. (Canopy ″CLOSE″) / Canopy Rly Pnl	M520-U5N-L	101
K2P	Relay (Gnd Power Cut Out)	AJ-A4N-176	66
K2SG	Relay / Smoke Control Unit	9228-4424	74
K2X	Relay (No. 2 Fail Sense) / Rly Pnl	MS27401-36	81
K3C	Relay (Elev Trim Ind) / Rly Pnl	M83536/2-024	102
K3EX	Relay (MLG Unsafe Ind) / LH Facia Rly Pnl	9235-4842	76
K3G	Relay (Ldg Gr Uplock Safety) / Rly Pnl	M6106/51-005	88
K3GA	Relay (#3 Gnd Safety) / RH Wing Fillet	M83536/10-024M	23
K3HA	Relay (Shut-Off Valve Control)	M83536/10-024M	32
K3P	Relay (R/H Battery) / Main Distr Panel	AJ-A4N-176	87
K3SG	Relay / Smoke Control Unit	9228-4424	74
K4EX	Relay (Control, Xckpt Xfr Rly No. 1) / LH Facia Rly Pnl	Y-D4N	76
K4G	Relay (Ldg Gr Audio Warn Ovrd)	M83536/2-024	109
K4HA	Relay (Zone 2 Cooling Ind #1) / RH Wing Fillet	M83536/2-024	23
K4P	Relay (LH Battery) / Main Distr Pnl	AJ-A4N-176	87
K4SG	Relay / Smoke Control Unit	9220-4249	74
K4X	Relay (Time Delay, Inv Transfer) / Rly Pnl	TDH-6050-3001	88

Figure 1-3 (Sheet 20 of 42) Electrical Equipment Location/Reference Designator List

Designator No.	Description / Location	Part No.	Item No.
K5C	Relay (Aileron Trim Cont)	M83536/10-024M	56
K5EX	Relay (Control, Xckpt Xfr Rly No. 2) / LH Facia Rly Pnl	Y-D4N	76
K5HA	Relay (Zone 2 Cooling Ind #2) / RH Wing Fillet	M83536/10-024M	23
K5SG	Relay (Fail Safe Rly No. 1) / LH Console	MS24149-D1	75
K6C	Relay (Elev Trim Cont)	M83536/10-024M	40
K6P	Relay (Non-Ess Bus Tie-In) / Main Distr Pnl	AJ-A4N-176	87
K6SG	Relay (Fail Safe Rly No. 2) / LH Console	MS24149-D1	75
K6X	Relay (Inv Transfer) / Rly Pnl	MS27400-17	88
K7HA	Relay (Time Delay) / Rly Pnl	TDH-6050-1502	102
K7P	Relay (Gen Fail Ind) / Rly Pnl	M327400/17	88
K8HA	Relay (Time Delay) / Rly Pnl	TDH-6050-1502	102
K9P	Relay (Canopy Power) / Main Distr Pnl	C600-A4N	87
L1AA	Fuselage Pylon RH Assy / Pylon	41G-27305	25
L1C	Speed Brakes Valve, Selector	362-0377	125
L1G	Nose Wheel Steering Valve, Shut-off	6770-3	111
L1M	Canopy Seal Regulator	11182B-CL41	100
L2AA	Fuselage Pylon LH Assy / Pylon	41G-27305	64
L2G	Main Ldg Gr Door Valve, Select	326-0377	128
L3G	Ldg Gr Valve, Select	362-0377	133
LCU No. 1	Light Dimmer Module	MW4528202-1	119
LCU No. 2	Light Dimmer Module	NW4528202-1	119
LCU No. 3	Light Dimmer Module	MW4528202-1	119

Figure 1-3 (Sheet 21 of 42) Electrical Equipment Location/Reference Designator List

Designator No.	Description / Location	Part No.	Item No.
LCUQ1	Transistor (Console Light) (Disc Comp Box Ckpt)	2N3492	106
LCUQ2	Transistor (Inst Light) (Disc Comp Box Ckpt)	2N3492	106
LCUQ3	Transistor (Flood Light) (Disc Comp Box Ckpt)	2N3492	106
M1DA	Wing Flap Pos Indicator / Instr Pnl	EA323-2H	92
M1DB	Hydraulic Press Indicator / Instr Pnl	18-1417	92
M1DC	Fuel Qty Indicator / Instr Pnl	JG602A1	92
M1DD	Reg Acclrm Fwd Indicator / Nose Compartment	AE322-3B	3
M1EA	Tachometer Indicator / Instr Pnl	1559-10-03	92
M1EB	Engine Oil Press Indicator / Instr Pnl	AI346-2A	92
M1ED	EGT Indicator / Instr Pnl	152B22A	92
M1F	Computer Altitude Indicator RH / Instr Pnl	31236-10T-C11	92
M1FA	Turn & Slip Indicator LH / Instr Pnl	AE355-2A (-3A)	92
M1FB	Attitude Indicator LH / Instr Pnl	140140-01-01	92
M1G	Main Wheel Position Indicator RH / Instr Pnl	MS27403-1	92
M1P	Loadmeter / LH Facia Pnl	Z2291W	76
M2DD	Reg Acclrm Aft Indicator / Nose Compartment	AE322-3B	3
M2EA	Engine Life Monitor	501-1361-03	106
M2F	Servoed Altimeter LH / Instr Pnl	81-22-20	92
M2FA	Turn & Slip Indicator RH / Instr Pnl	AE355-2A (-3A)	92
M2FB	Attitude Indicator RH / Instr Pnl	AE300270-4A	92
M2G	Nose Wheel Position Indicator / Instr Pnl	MS27403-1	92
M3G	Main Wheel Position Indicator LH / Instr Pnl	MS27403-1	92
MG1P	Starter Generator	2CM82E1A	48
MG1V	Inverter	ASH564B-6	78

Figure 1-3 (Sheet 22 of 42) Electrical Equipment Location/Reference Designator List

Designator No.	Description / Location	Part No.	Item No.
MG2V	Inverter	ASH564B-6	79
N207	Terminal Block / Rly Pnl	M81714/63-20S	102
N208	Terminal Block / Rly Pnl	M81714/63-20S	102
N209	Terminal Block / Rly Pnl	M81714/63-20S	102
N211	Terminal Block / Rly Pnl	M81714/63-20S	102
N212	Terminal Block / Rly Pnl	M81714/63-20S	102
N220	Terminal Block / Rly Pnl	M81714/63-20S	88
N221	Terminal Block / Rly Pnl	M81714/63-20S	88
N222	Terminal Block / Rly Pnl	M81714/63-20S	88
N223	Terminal Block / Rly Pnl	M81714/63-16S	88
N224	Terminal Block (Nose BHD) / Rly Pnl	M81714/63-20S	88
N225	Terminal Block / Rly Pnl	M81714/63-20S	88
N226	Terminal Block / Rly Pnl	M81714/63-20S	88
N230	Terminal Junction Module / LH Facia Pnl	M81714/63-20S	76
P1	Connector, Plug (Eng Disc)	MS3476L22-21S	49
P10	Connector, Plug (BH Disc) / Nose Area	MS3476L20-16W	3
P100L	Connector, Plug (Ltg Cont Pnl) / Cockpit	MS3476L18-32S	106
P10DC	Connector, Plug (Tank Access Pnl) / Fuel Tank	33-6810-1	129
P10G	Connector, Plug (Nose Gear Weight Switch)	MS3476L12-10P	82
P10HA	Connector, Plug (Cab Air Inlet O/H Rly) / Rly Pnl	MS3456L18-1S	88
P10L	Connector, Plug (Lwr Anti-Col Light)	MS3456L10SL-3S	70
P11	Connector, Plug (BH Disc) / RH Console	MS3476L20-16SW	13
P111SX	Clamp, Cable (IFF Wing Break) / Wing	M39012/01-0501	23
P11DC	Connector, Plug (Fuel Tank Disc) / Fuel Tank	33-6810-1	129

Figure 1-3 (Sheet 23 of 42) Electrical Equipment Location/Reference Designator List

Designator No.	Description / Location	Part No.	Item No.
P11HA	Connector, Plug (Zone 2 Cooling Valve)	MS3456L14S-5S	36
P11L	Connector, Plug (Let Down Chart) / Cockpit	M642/4-1	106
P12	Connector, Plug (BH Disc) / Nose Area	MS3476L20-39P	3
P12G	Connector, Plug (Door Valve)	MS3476L10-6S	128
P13G	Connector, Plug (LDG Gr Selector Valve)	MS3476L10-6S	133
P14	Connector, Plug (BH Disc) / Nose Area	MS3476L20-16P	3
P14G	Connector, Plug (LDG Gr Cont Unit)	MS3476L14-19S	107
P15	Connector, Plug (BH Disc) / Cockpit / Bulkhead	MS3476L20-16S	106
P15G	Connector, Plug (Landing Gear Warn)	MS3456L16S-1S	112
P16	Connector, Plug (BH Disc) / Bulkhead	MS3476L22-41PW	3
P16DC	Connector, Plug (Fuel Tank Disc (RH Ctr)) / Fuel Tank	20P172-3	129
P16G	Connector, Plug (Ldg Gr Weight Switch)	MS3476L12-10P	61
P17	Connector, Plug (BH Disc) / Bulkhead	MS3476L22-41SW	106
P17DC	Connector, Plug (RH Ctr Tank Probe)	20P172-3	130
P18	Connector, Plug (BH Disc) / Bulkhead	MS3476L22-41P	3
P18DC	Connector, Plug (Fuel Tank Disc (RH Ctr)) / Fuel Tank	20P230-4	129
P19	Connector, Plug (BH Disc) / Bulkhead	MS3476L22-41S	106
P19DC	Connector, Plug (RH Ctr Tank Probe) / Fuel Tank	20P230-5	130
P1AA	Connector, Plug (Pylon Disc RH) / Pylon	MS3106R18-1P	25
P1DA	Connector, Plug (Wing Flap Pos'n) / Instr Pnl	MS3456L10SL-3S	92
P1DB	Connector, Plug (Hyd Press Ind) / Instr Pnl	MS3456L14S-2S	92
P1DC	Connector, Plug (Fuel Qty Ind) / Instr Pnl	165-61-1014	92
P1DD	Connector, Plug (Reg Accel) / Nose Compartment	MS3476L12-10S	3
P1EA	Connector, Plug (Tachometer Ind) / Instr Pnl	MS3456L10SL-3S	92

Figure 1-3 (Sheet 24 of 42) Electrical Equipment Location/Reference Designator List

Designator No.	Description / Location	Part No.	Item No.
P1EB	Connector, Plug (Engine Oil Press Ind) / Instr Pnl	MS3456L14S-2S	92
P1EE	Connector, Plug	MS3456L-10SL-3S	132
P1EF	Connector Plug (Ext Tank Shut-Off Valve)	M3456L10SL-3S	28
P1EX	Connector, Plug (Alt MLG Cont) / Ctr Pedestal	MS3476L14-19S	22
P1F	Connector, Plug / Instr Pnl	MS3476L14-12S	92
P1FA	Connector, Plug (Turn & Slip Ind, RH) / Instr Pnl	MS3456L10SL-3S	92
P1FB	Connector, Plug (Gyro Rate Switching)	MS3456L14S-5S	8
P1FC	Connector, Plug (Directional Gyro)	MS3456L20-29S	2
P1FD	Connector, Plug (Signal Summing Unit)	MS3476L16-26S	98
P1G	Connector, Plug (RH MLG Pos Ind) / Instr Pnl	MS3456L10SL-3S	92
P1HA	Connector, Plug (System Shut-Off Valve)	MS3476L14-5S	28
P1HB	Connector, Plug (Wshld De-Ice Valve)	MS3476L14-5S	29
P1J	Connector, Plug (LH Throttle Assy) / LH Console	MS3476L14-19S	73
P1L	Connector, Plug (Compass Lgt) / Ctr Console	AN3116-2	22
P1M	Connector, Plug (Canopy Actuator)	MS3476L12-3S	97
P1MA	Connector, Plug (RH Actuator)	MS3476L12-3S	69
P1P	Connector, Plug (LH Battery)	MS25182-2	80
P1Q	Connector, Plug (Fuel Booster Pump)	MS3476L12-3S	134
P1R	Connector, Plug (OLM DAU) Nose Compt	MS27484T14B35P	84
P1T	Connector, Plug (OLM Press XDCR Module) RH Wing Fillet	MS27484T10B35S	24
P1V	Connector, Plug (Static Inv No. 1)	MS3456L24-11S	78
P1WA	Connector, Plug (Master Warn Box) / Instr Pnl	MS3476L18-32S	92

Figure 1-3 (Sheet 25 of 42) Electrical Equipment Location/Reference Designator List

Designator No.	Description / Location	Part No.	Item No.
P1WB	Connector, Plug (Fire Overheat Cont) / Instr Pnl	MS3476L12-10S	114
P2	Connector, Plug (Eng Disc) / Eng Bay	MS3476L12-3P	31
P20	Connector, Plug (BH Disc) / LH Wing	MS3476L12-8S	3
P201	Connector, Plug (Left Wing Disc) / LH Wing	MS3476L22-21P	60
P202	Connector Plug (Right Wing Disc) / RH Wing	MS3476L22-21P	19
P205	Connector, Plug (Nose Rly Pnl) / Nose Area	MS3476L24-61S	3
P208	Connector, Plug (Eng & Acft Elect Cont Pnl) / Ctr Console	MS3476L18-32S	22
P209	Connector, Plug (Eng & Acft Elect Cont Pnl) / Ctr Console	MS3476L18-11S	22
P210	Connector, Plug (Aux Fuel Cont) / Ctr Console	MS3476L14-15S	22
P211	Connector, Plug (Air Cond Cont Pnl) / Ctr Console	MS3476L14-19S	22
P212	Connector, Plug (Nose Rly Pnl) / Nose Area	MS3476L24-31S	3
P217	Connector, Plug (Discrete Component Box) / Nose	117RR-A15S	115
P218	Connector, Plug (Discrete Component Box) / Nose	117RR-C37S	115
P219	Connector, Plug (Discrete Component Box) / Nose	117RR-C37S	115
P20DC	Connector, Plug (Fuel Tank Disc (RH Ctr)) / Fuel Tank	33-6810-1	129
P21	Connector, Plug (BH Disc) / Bulkhead	MS3476L12-8P	3
P21DC	Connector, Plug (Fuel Tank Disc (RH Ctr))	33-6810-1	130
P22	Connector, Plug (BH Disc) / Bulkhead	MS3476L24-61P	3
P22DC	Connector, Plug (Fwd Tank Probe)	20P228-4	135
P220A	Connector, Plug (LCU No. 1)	M24308/2-1	119
P220B	Connector, Plug (LCU No. 2)	M24308/2-1	119
P220C	Connector, Plug (LCU No. 3)	M24308/2-1	119

Figure 1-3 (Sheet 26 of 42) Electrical Equipment Location/Reference Designator List

Designator No.	Description / Location	Part No.	Item No.
P224	Connector, Plug (Nose Rly Pnl) / Nose Area	MS3476L14-4S	3
P225	Connector, Plug / DC Reg Cont Pnl	MS3106F16S-15	3
P226	Connector, Plug (Nose Relay Pnl Strain Gauge Pri/Back-up Switches)	MS27473E22F35S	3
P227	Connector, Plug (OLM Aft Disc FS314.00)	MS3475W24-61S	122
P23	Connector, Plug (BH Disc) / Bulkhead	MS3476L24-61S	106
P23DC	Connector, Plug (Fwd Tank Probe)	33-6801-1	135
P24	Connector, Plug / Bulkhead	MS3476L24-61PW	3
P25	Connector, Plug (BH Disc) / Bulkhead	MS3476L24-61SW	3
P26	Connector, Plug / Bulkhead	MS3476L20-41P	3
P27	Connector, Plug (BH Disc) / Bulkhead	MS3476L20-41S	3
P28	Connector, Plug (BH) / Bulkhead	MS3476L24-61PX	3
P29	Connector, Plug (BH) / Bulkhead	MS3476L24-61SX	3
P27DC	Connector, Plug (RH Ctr Tank Probe)	20P228-4	130
P28DC	Connector, Plug (Tank Probe, RH Ctr)	33-6802-1	130
P29DC	Connector, Plug (Tank Probe, RH Ctr)	20P172-3	130
P2AA	Connector, Plug (Pylon Disc, LH) / Pylon	MS3106R18-1P	64
P2DA	Connector, Plug (Flap Xmtr)	MS3456L14S-2S	126
P2DB	Connector, Plug (Hydr Press Xmtr)	MS3456L14S-2S	116
P2DD	Connector, Plug (Accl Reg) / Nose Compartment	MS3476L12-10S	3
P2EA	Connector, Plug (Eng Life Monitor)	MS3476L14-12S	94
P2EF	Connector, Plug (Fuel Press Sw, RH) / Fuselage	MS3456L10SL-36	110
P2EX	Connector, Plug (MLG Cont) / LH Facia Pnl	MS3476L14-19S	76
P2F	Connector, Plug (Alt Comp Ind) / Instr Pnl	MS3476L14-15S	92

Figure 1-3 (Sheet 27 of 42) Electrical Equipment Location/Reference Designator List

Designator No.	Description / Location	Part No.	Item No.
P2FA	Connector, Plug (Turn & Slip Ind, LH) / Instr Pnl	MS3456L10SL-3S	92
P2FB	Connector, Plug (Vertical Gyro)	MS3456L24-28S	9
P2FC	Connector, Plug (Amp, Compass)	MS3456L20-27S	7
P2G	Connector, Plug (NLG Ind) / Instr Pnl	MS3456L10SL-3S	92
P2HA	Connector, Plug (Cabin Safety Valve)	MS3456L10SL-4S	90
P2J	Connector, Plug (Ignition Unit)	PTO6E-6-1S	34
P2L	Connector, Plug (Nav Light Flasher)	MS3456L16S-8S	81
P2M	Connector, Plug (Ext Canopy Cont) / LH Console	MS3476L8-33P	73
P2MA	Connector, Plug (LH Actuator)	MS3476L12-3S	69
P2P	Connector, Plug (RH Battery)	MS25182-2	4
P2Q	Connector, Plug (Fuel Shut-Off Valve)	MS3476L12-3S	131
P2R	Connector, Plug (OLM DAU) Nose Compt	MS27484T8B35S	84
P2SG	Connector, Plug (STN 314 Firewall Disc) / Aft Section	MS3456L14S-5S	
P2T	Connector, Plug (OLM NX/Rol Rate Accel) Eng Bay FS257.07	MS27484T10B35S	27
P2V	Connector, Plug (Static Inv No. 2)	MS3456L24-11S	79
P30	Connector, Plug (BH Disc) / Bulkhead	MS3476L16-8S	106
P31	Connector, Plug (BH Disc) / Bulkhead	MS3476L16-8P	106
P32	Connector, Plug / Cockpit	20P230-4	106
P33	Connector, Plug (BH Disc) / LH Wing	20P228-6	60
P34	Connector, Plug (BH Disc) / RH Wing Fillet	MS3476L12-3P	23
P36	Connector, Plug (BH Disc) / RH Wing Fillet	MS3476L22-21S	23
P37	Connector, Plug (BH Disc) / LH Wing Fillet	MS3476L22-21P	68
P38	Connector, Plug (BH Disc LH) / LH Wing Fillet	MS3476L20-39S	68

Figure 1-3 (Sheet 28 of 42) Electrical Equipment Location/Reference Designator List

Designator No.	Description / Location	Part No.	Item No.
P39	Connector, Plug (BH Disc, LH) / LH Wing	MS3476L20-39P	60
P3C	Connector, Plug (Speed Brakes)	MS3476L10-6S	125
P3DD	Connector, Plug (Accel Sensor)	MS3476L18-32S	67
P3EF	Connector, Plug (LH Fuel Press Sw) / Fuselage	MS3456L10SL-3S	110
P3F	Connector, Plug (Servoed Alt) / Instr Pnl	M83723/86R1624N	92
P3FB	Connector, Plug (Attitude Ind LH) / Instr Pnl	MS3476L14-19S	92
P3FC	Connector, Plug (Comp Signal Repeater)	MS3476L20-41S	89
P3FD	Connector, Plug (Flap Xmtr)	MS3126F8-3S	126
P3G	Connector, Plug (LH MLG Pos Ind) / Instr Pnl	MS3456L10SL-3S	92
P3HB	Connector, Plug (Wshld Demist Valve)	MS3476L14-5S	95
P3SG	Connector, Plug (Port Smoke Valve) / Aft Section	MS3476L12-3S	44
P40	Connector, Plug (Wing Disc) / RH Wing Fillet	MS3476L10-6S	23
P41	Connector, Plug (BH Disc Canted) / LH Wing	MS3476L10-6P	60
P42	Connector, Plug (BH Disc Canted) / RH Console	MS3476L22-21S	13
P43	Connector, Plug (BH Disc) / RH Wing Fillet	MS3476L22-21P	23
P44	Connector, Plug (BH Disc) / RH Wing Fillet	MS3476L20-16S	23
P45	Connector, Plug (BH Disc) / RH Wing Fillet	MS3476L20-16P	23
P46	Connector, Plug (BH Disc) / RH Wing Fillet	M3476L20-39S	23
P47	Connector, Plug (BH Disc) / RH Wing Fillet	MS3476L20/39P	23
P4C	Connector, Plug (Aileron Trim Hinge) / LH Wing	M28748/3-COAS1A	60
P4DC	Connector, Plug (LH Intake Fairing) / LH Wing	20P228-6	60
P4F	Connector, Plug (Alt Test) / RH Console	C71C00269-1	13
P4FB	Connector, Plug (Attitude Ind RH) / Instr Pnl	MS3456L10SL-3S	92
P4HA	Connector, Plug (Modulating Valve)	MS3476L14-5S	30

Figure 1-3 (Sheet 29 of 42) Electrical Equipment Location/Reference Designator List

Designator No.	Description / Location	Part No.	Item No.
P4R	Connector, Plug (OLM w/EMS) Nose Compt	MS27473E14B35S	84
P4SG	Connector, Plug (Stbd Smoke Valve) / Aft Section	MS3476L12-3S	44
P5DC	Connector, Plug (LH Intake Fairing)	20P228-6	60
P5G	Connector, Plug (Ldg Gr Dwn Sw)	MS3476L10-6S	55
P5HA	Connector, Plug (Cabin Air Inlet O/H Sw)	MS3456L10SL-3S	105
P5R	Connector, Plug (OLM DAU) Nose Compt	MS27484T14B35PB	84
P60	Connector, Plug (BH Disc)	MS3459KT20-27S	3
P61	Connector, Plug (BH Trough) / Bulkhead	MS3459KT24-12S	106
P6G	Connector, Plug (WOW Sw)	MS3476L12-10P	61
P6HA	Connector, Plug (cabin Temp Cont Light)	MS3476L20-27S	91
P6MR	Connector, Plug (DAU w/EMS) / Pressure Bulkhead FS149.00	MS3476L14-12P	3
P7	Connector, Plug (Cont Column Disc)	MS3476L14-19P	106
P70	Connector, Plug (BH Disc)	MS3459KT20-27S	107
P7DC	Connector, Plug (LH Intake Fairing) / LH Wing	20P228-6	60
P7G	Connector, Plug (RH Ldg Gr Dwn Sw Disc)	MS3476L10-6S	55
P7HA	Connector, Plug (Cabin Inlet Temp Sensor)	MS3456L10SL-3S	103
P7MR	Connector, Plug (OLM w/EMS) DAU Brkt	MS3456W10-6P	84
P8	Connector, Plug (Cont Column Disc RH) / Cockpit	MS3476L14-19P	106
P8DC	Connector, Plug (Tank Access Pnl) / Fuel Tank	20P230-4	127
P8G	Connector, Plug (NLG Uplock Sw Disc)	MS3476L10-6S	118
P9	Connector, Plug (BH Disc) / Instr Pnl	MS3476L24-61S	92
P9DC	Connector, Plug (Fuel Tank Disc) / Fuel Tank	20P230-5	129
P9G	Connector, Plug (NLG Downlock Sw Disc)	MS3476L10-6SW	117

Figure 1-3 (Sheet 30 of 42) Electrical Equipment Location/Reference Designator List

Designator No.	Description / Location	Part No.	Item No.
P9HA	Connector, Plug (Eng Anti-Ice Valve)	PT06E-6-1S	29
P9L	Connector, Plug (Upper Anti-Col Light)	MS3456L10SL-3S	33
PA1X	Phase Adapter No. 1	661102B	93
PA2X	Phase Adapter No. 2	661102B	94
R1C	Resistor (Horizontal Stab) / Aft Fuselage	RER75F24R9R	124
R1FD	Flap Xmtr	C75509	126
R1HA	Air Cond Cont Rheostat / Ctr Console	45000-14	22
R1P	DC PWR Shunt	8300-300	50
R2HA	Inlet Temp Sensor	300050-15	103
R3HA	Resistor (Air Cond Cont) / Ctr Console	RL07S113J	22
R3WB	Resistor (O/H Cont)	RS-2A-500-1W	114
S10G	LDG Gr Weight Sw	21EN9-6	61
S10M	Canopy EXT SEL Sw, Toggle	MS24524-26	71
S11G	LDG Gr Dr GND Service Sw, Toggle	MS24524-23	52
S12G	NLG Weight Sw, Sensitive	21EN9-6	82
S12M	Canopy EXT OPS Sw, Toggle	MS24523-30	72
S15G	LDG Gr Cont Unit	A50M6-4	107
S16G	Emer Hyd LDG Gr Cutout Sw	MS25011-1	108
S18G	Audio LDG Gr Warn Sw, Push	MS25089-4C	11
S19G	LDG Gr Throttle Sw / LH Console	MS24456-1	63
S1DC	Fuel Qty Test Sw, Push / Instr Pnl	MS25089-4C	92
S1EC	High Oil Temp Sw	41A-50703-4	49
S1EE	Fuel Low Press Sw	21SN41-105	132
S1EF	Ext Tank SEL Sw, Toggle / Ctr Console	MS35058-23	22
S1EX	MLG Audio Warn O'Ride Sw / Ctr Console	MS25089-4C	92

Figure 1-3 (Sheet 31 of 42) Electrical Equipment Location/Reference Designator List

Designator No.	Description / Location	Part No.	Item No.
S1FB	Fast Gyro Erect Sw, Push / Instr Pnl	MS25089-4C	92
S1FD	Pre-Stall WRN Test Sw, Push / LH Console	MS25089-4C	73
S1G	LDG Gr Dr Dwn Sw, Sensitive	21EN9-6	62
S1HA	Air Cond Master Cont Sw / Ctr Console	MS35059-23	22
S1J	Air Start Sw, Push / Ckpt	MS25089-4B	106
S1K	Eng Master Sw / Ctr Console	MS24660-23D	78
S1M	Canopy SEL Sw, Toggle / Instr Pnl	MS24523-23	92
S1MA	Seat Adj LH Sw, Toggle / LH Facia Pnl	MS24523-27	76
S1P	Elect Master Sw / Ctr Console	MS25068-21 OR MS24525-21	22
S1RNA	Rotary Solenoid Sw	172934-001	5
S1SG	Switch (RH Smoke Arm) / Instr Pnl	MS35058-22	92
S1SX	RH Seat Bailout Sw, Sensitive / Ckpt	ADD3721R12	15
S1V	Fire & O/H Test Sw / Ctr Console	61919-2	22
S20G	LDG Gr Up SEL Sw, Toggle / RH Facia Pnl	MS35058-23	10
S21	Horn Cutout Sw / RH Facia Pnl	MS25089-5C	10
S22G	Baro Press Sw, Pressure	GB300NA111	6
S2AA	Ext Tank Jettison Button Sw, Push / Ctr Console	MS25089-3CR	22
S2DC	Low Fuel Qty WRN Sw	FL203-1	136
S2EX	Xckpt Sel Sw / Instr Pnl	MS24660-23D	92
S2FD	Stall Warn Lift Transducer	C75507	16
S2G	LDG Gr Dr Up Sw, Sensitive	21EN9-6	53
S2HA	Cabin Temp SEL Sw / Ctr Console	MS25128-1	22
S2HB	Wshld Demist Sw, Toggle / LH Facia Pnl	MS35058-23	76
S2J	Air Start Sw, Push / Ckpt	MS25089-4B	106

Figure 1-3 (Sheet 32 of 42) Electrical Equipment Location/Reference Designator List

Designator No.	Description / Location	Part No.	Item No.
S2K	Start Sw, Toggle / Ctr Console	MS35059-26	22
S2MA	Seat Adj Sw, Toggle / LH Facia Pnl	MS24523-27	76
S2P	GEN Cont Sw, Toggle / Ctr Console	MS35059-27	22
S2SG	Switch (LH Smoke Arm) / LH Console	MS24523-22	104
S2V	Inv No. 2 Cont Sw, Toggle / Ctr Console	MS35058-24	22
S3AA	Ext Tank Arm Sw, Toggle / Ctr Console	MS35058-22	22
S3C	Spd Brk Sw / P/O RH Throttle Assy (Ctr Console)	13AT2	22
S3J	Throttle/Ignition Sw / Ctr Console	MS24456-1	22
S3SG	Switch (Tank Select / LH Console)	MS24523-23	104
S4C	Elev Trim Alt Cont Sw / LH Console	MS25128-1	73
S4EF	RH Press Aux Fuel Sw / Fuselage	1G349-3	110
S4EX	Alt Elev Trim Sw / RH Console	MS25128-1	10
S4G	LDG Gr Up Sw, Sensitive	21EN9-6	54
S4HA	Cabin Air Inlet Sw, Mercury	26220068	105
S4HB	Wshld De-Ice Cont Sw, Toggle / LH Facia Pnl	MS35058-23	76
S4K	Starter Stop Sw, Push / Ctr Console	MS25089-4C	22
S4L	LDG & Taxi Lt Cont Sw, Toggle / Ckpt	MS35059-21	106
S4M	Canopy Limit Sw	MS24331-1	99
S4SG	Switch (Tank Select) / Ctr Console	MS24523-23	22
S5C	Spd Brk Sw / LH Throttle	13AT2	73
S5EF	LH Press Sw	1G349-3	128
S5G	LDG Gr WOW Sw, Sensitive	21EN9-6	61
S5HA	Pitot & Stall Warn Sw / LH Facia Pnl	MS24658-23D	76
S6C	Ail Trim Alt Cont Sw / LH Console	MS25128-1	73

Figure 1-3 (Sheet 33 of 42) Electrical Equipment Location/Reference Designator List

Designator No.	Description / Location	Part No.	Item No.
S6EX	Alt Ail Trim Sw / RH Console	MS25128-1	10
S6G	LDG Gr Dwn Sw, Sensitive	21EN9-6	62
S6HA	Eng Anti-Ice Sw, Toggle / Ctr Console	MS35059-23	22
S7C	Spd Brk Warn Sw	MS24456-1	38
S7G	LDG Gr Up Sw, Sensitive	21EN9-6	53
S8C	Elev Trim Tab Pos Sw	MS25085-1	42
S9G	LDG Gr Up Sw, Sensitive	21EN9-6	54
SPLC33MR	Splice (OLM w/EMS) Nose Compt	M81714/12-20D-2	84
TB19	Terminal Junction / LH Wing	MS27212-1-6	60
TB20	Terminal Junction / LH Wing	MS27212-1-6	60
TB27	Terminal Junction / RH Wing	MS27212-1-6	60
TB28	Terminal Junction / RH Wing	MS27212-1-6	60
TB51	Terminal Junction / LH Wing	MS27212-1-6	60
TB52	Terminal Junction / RH Wing	MS27212-1-6	60
TB203	Rack Mounting / Rly Pnl	SJT508504	88
TB203-1	Terminal Junction / Rly Pnl	M81714/60-20-03	88
TB204	Rack Mounting / Rly Pnl	SJT508504	88
TB204-1	Terminal Junction / Rly Pnl	M81714/60-20-04	88
TB204-2	Terminal Junction / Rly Pnl	M81714/60-20-03	88
TB204-3	Terminal Junction / Rly Pnl	M81714/60-22-05	88
TB204-4	Terminal Junction / Rly Pnl	M81714/60-20-04	88
TB206	Rack Mounting (Nose Rly Pnl) / Rly Pnl	SJT510504	88
TB206-1	Terminal Junction / Rly Pnl	M81714/60-20-04	88
TB206-2	Terminal Junction / Rly Pnl	M81714/60-20-03	88

Figure 1-3 (Sheet 34 of 42) Electrical Equipment Location/Reference Designator List

Designator No.	Description / Location	Part No.	Item No.
TB206-3	Terminal Junction / Rly Pnl	M81714/60-20-04	88
TB206-4	Terminal Junction / Rly Pnl	M81714/60-20-04	88
TB206-5	Terminal Junction / Rly Pnl	M81714/60-20-04	88
TB206-6	Terminal Junction / Rly Pnl	M81714/60-16-01	88
TB206-7	Terminal Junction / Rly Pnl	M81714/60-20-03	88
TB206-8	Terminal Junction / Rly Pnl	M81714/60-20-01	88
TB207	Rack Mounting / Nose Area	SJT508504	3
TB207-1	Terminal Junction / Nose Area	M81714/60-22-04	3
TB207-2	Terminal Junction / Nose Area	M81714/60-22-05	3
TB207-3	Terminal Junction / Nose Area	M81714/60-20-03	3
TB207-4	Terminal Junction / Nose Area	M81714/60-20-04	3
TB207-5	Terminal Junction / Nose Area	M81714/60-20-02	3
TB207-6	Terminal Junction / Nose Area	M81714/60-20-04	3
TB210	Rack Mounting (Ctr Console) / Rly Pnl	SJT507504	22
TB210-1	Terminal Junction / Rly Pnl	M81714/60-20-01	22
TB210-2	Terminal Junction / Rly Pnl	M81714/60-16-01	22
TB210-3	Terminal Junction / Rly Pnl	M81714/60-20-04	22
TB210-4	Terminal Junction / Rly Pnl	M81714/60-20-04	22
TB210-5	Terminal Junction / Rly Pnl	M81714/60-20-03	22
TB211	Rack Mounting (Ctr Console) / Rly Pnl	SJT507504	22
TB211-1	Terminal Junction / Rly Pnl	M81714/60-20-06	22
TB211-2	Terminal Junction / Rly Pnl	M81714/60-20-04	22
TB211-3	Terminal Junction / Rly Pnl	M81714/60-20-03	22
TB211-4	Terminal Junction / Rly Pnl	M81714/60-20-01	22

Figure 1-3 (Sheet 35 of 42) Electrical Equipment Location/Reference Designator List

Designator No.	Description / Location	Part No.	Item No.
TB211-45	Terminal Junction / Rly Pnl	M81714/60-20-06	22
TB211-6	Terminal Junction / Rly Pnl	M81714/60-20-03	22
TB214	Rack Mounting (Canted) / Canopy Rly Pnl	SJT505504	101
TB214-1	Terminal Junction / Canopy Rly Pnl	M81714/60-20-06	101
TB214-2	Terminal Junction / Canopy Rly Pnl	M81714/60-20-02	101
TB214-3	Terminal Junction / Canopy Rly Pnl	M81714/60-20-01	101
TB214-4	Terminal Junction / Canopy Rly Pnl	M81714/60-20-04	101
TB215	Rack Mounting (Aft LH Console Rly Assy) / Rly Pnl	SJT507504	102
TB215-1	Terminal Junction / Rly Pnl	M81714/60-20-06	102
TB215-2	Terminal Junction / Rly Pnl	M81714/60-20-04	102
TB215-3	Terminal Junction / Rly Pnl	M81714/60-20-04	102
TB215-4	Terminal Junction / Rly Pnl	M81714/60-20-03	102
TB215-5	Terminal Junction / Rly Pnl	M81714/60-20-04	102
TB215-6	Terminal Junction / Rly Pnl	M81714/60-22-05	102
TB215-7	Terminal Junction / Rly Pnl	M81714/60-22-05	102
TB217	Rack Mounting (Aft RH Console Rly Assy) / Rly Pnl	SJT504504	96
TB217-1	Terminal Junction / Rly Pnl	M81714/60-20-04	96
TB217-2	Terminal Junction / Rly Pnl	M81714/60-20-03	96
TB217-3	Terminal Junction / Rly Pnl	M81710/60-20-06	96
TB218	Rack Mounting (LH Rear Instr Pnl) / Instr Pnl	SJT505504	92
TB218-1	Terminal Junction / Instr Pnl	M81714-20-01	92
TB218-2	Terminal Junction / Instr Pnl	M81714/60-20-02	92
TB218-3	Terminal Junction / Instr Pnl	M81714/60-20-01	92
TB218-4	Terminal Junction / Instr Pnl	M81714/60-20-02	92

Figure 1-3 (Sheet 36 of 42) Electrical Equipment Location/Reference Designator List

Designator No.	Description / Location	Part No.	Item No.
TB218-4	Terminal Junction / Instr Pnl Post Xckpt Instl	M81714/60-20-02	92
TB218-5	Terminal Junction / Instr Pnl	M81714/60-20-04	92
TB218-6	Terminal Junction / Instr Pnl	M81714/60-20-04	92
TB219	Rack Mounting (RH Rear Instr Pnl) / Instr Pnl	SJT505504	92
TB219-1	Terminal Junction / Instr Pnl	M81714/60-20-01	92
TB219-2	Terminal Junction / Instr Pnl	M81714/60-20-02	92
TB219-3	Terminal Junction / Instr Pnl	M81714/60-20-04	92
TB220	Rack Mounting/FS149	SJT513504	9A
TB220-1	Terminal Junction	M81714/60-20-04	9A
TB220-2	Terminal Junction	M81714/60-20-03	9A
TB220-3	Terminal Junction	M81714/60-20-04	9A
TB220-4	Terminal Junction	M81714/60-22-05	9A
TB220-5	Terminal Junction	M81714/60-22-04	9A
TB220-6	Terminal Junction	M81714/60-20-04	9A
TB220-7	Terminal Junction	M81714/60-20-03	9A
TB220-8	Terminal Junction/FS149 (Instld during fleet rewire but not used)	M81714/60-20-02	9A
TB220-8	Terminal Junction / FS149 - Post Xckpt Instl	M81714/60-20-04	9A
TB220-9	Terminal Junction/FS149	M81714/60-20-04	9A
TB220-10	Terminal Junction / FS149	M81714/60-20-04	9A
TB220-11	Terminal Junction / FS149	M81714/60-20-04	9A
TB220-12	Terminal Junction / FS149	M81714/60-20-03	9A
TB220-13	Terminal Junction/FS149 Post Snowbird ADF	M81714/60-20-03	9A
TB221	Rack Mounting (LH Rear BH)	SJT513504	76A

Figure 1-3 (Sheet 37 of 42) Electrical Equipment Location/Reference Designator List

Designator No.	Description / Location	Part No.	Item No.
TB221-1	Terminal Junction	M81714/60-20-01	76A
TB221-2	Terminal Junction	M81714/60-20-04	76A
TB221-3	Terminal Junction	M81714/60-20-03	76A
TB221-4	Terminal Junction	M81714/60-20-01	76A

Figure 1-3 (Sheet 37A of 42) Electrical Equipment Location/Reference Designator List

Designator No.	Description / Location	Part No.	Item No.
TB221-5	Terminal Junction	M81714/60-22-05	76A
TB221-6	Terminal Junction	M81714/60-20-02	76A
TB221-7	Terminal Junction	M81714/60-20-03	76A
TB221-8	Terminal Junction	M81714/60-20-03	76A
TB221-9	Terminal Junction	M81714/60-20-01	76A
TB221-10	Terminal Junction	M81714/60-22-05	76A
TB221-11	Terminal Junction	M81714/60-20-03	76A
TB221-12	Terminal Junction	M81714/60-20-03	76A
TB221-13	Terminal Junction/FS149	M81714/60-20-03	76A
TB225-1	Terminal Junction / Fuselage	M81714/60-20-04	110
TB225-2	Terminal Junction / Fuselage	M81714/60-16-03	110
TB227	Rack Mounting (Rly Pnl RW Fillet) / RH Wing Fillet	SJT504504	23
TB227-1	Terminal Junction / RH Wing Fillet	M81714/60-16-02	23
TB227-2	Terminal Junction / RH Wing Fillet	M81714/60-20-04	23
TB227-3	Terminal Junction / RH Wing Fillet	M81714/60-20-03	23
TB228	Rack Mounting (RW) / RH Wing Fillet	SJT504504	23
TB228-1	Terminal Junction / RH Wing Fillet	M81714/60-16-02	23
TB228-2	Terminal Junction / RH Wing Fillet	M81714/60-16-01	23
TB228-3	Terminal Junction / RH Wing Fillet	M81714/60-20-06	23
TB230	Rack Mounting (RW) / RH Wing	SJT503504	19
TB230-1	Terminal Junction / RH Wing	M81714/60-16-03	19
TB230-2	Terminal Junction / RH Wing	M81714/60-20-06	19
TB231	Rack Mounting (LW) / LH Wing	SJT503504	60
TB231-1	Terminal Junction / LH Wing	M81714/60-20-06	60

Figure 1-3 (Sheet 38 of 42) Electrical Equipment Location/Reference Designator List

Designator No.	Description / Location	Part No.	Item No.
TB232	Rack Mounting (LH Duct Fairing) / LH Wing Fillet	SJT503504	68
TB232-1	Terminal Junction / LH Wing Fillet	M81714/60-20-04	68
TB232-2	Terminal Junction / LH Wing Fillet	M81714/60-20-04	68
TB234	Rack Mounting (Horiz Stab) / Aft Fuselage	SJT503504	124
TB234-1	Terminal Junction / Aft Fuselage	M81714/60-20-06	124
TB234-2	Terminal Junction / Aft Fuselage	M81714/60-20-04	124
TC1ED	P/O Eng Thermocouple Harness / Eng Bay	MIL-W-5846 Type 2	124
TR1DA	Wing Flap Pos Transmitter	MIL-T-5583A	127
TR1DB	Hydraulic Pressure Transmitter	ST106N	116
TR1EA	Tachometer Generator	MS25038-4	46
TR1EB	Engine Oil Pressure Transmitter	7724-30D5-1	47
U1HA	Cabin Pressure Control Unit	45958-10	91
VSTP1	Master Strain Gauge / Vertical Stab / LH Side	DTD2684-1	43
VSTP2	Back-up Strain Gauge / Vertical Stab / LH Side	DTD2684-1	43
VSTS1	Master Strain Gauge / Vertical Stab / RH Side	DTD2684-1	43
VSTS2	Back-up Strain Gauge / Vertical Stab / RH Side	DTD2684-1	43
W10WB	Cable Assy, Fire Sensing	24421082	123
W11WB	Cable Assy, Fire Sensing	24418082	121
W12WB	Cable Assy, Fire Sensing	24418082	121
W13WB	Cable Assy, Fire Sensing	24421082	123
W14WB	Cable Assy, Fire Sensing	24421082	123
W15WB	Cable Assy, Fire Sensing	24421082	123
W6WB	Cable Assy, Fire Sensing	24418082	121
W7WB	Cable Assy, Fire Sensing	24418082	121

Figure 1-3 (Sheet 39 of 42) Electrical Equipment Location/Reference Designator List

Designator No.	Description / Location	Part No.	Item No.
W8WB	Cable Assy, Fire Sensing	24421082	123
W9WB	Cable Assy, Fire Sensing	24421082	123
Z100L	Lighting Cont Pnl/Cockpit	41A-51208	106
Z1DD	Wing Spar Sensor Accelerometer	AE320-2C	67
Z1EF	Aux Fuel Control Panel/Centre Console	41A-51209	22
Z1FB	MC-1 Gyro Rate Switching	138474-01-01	8
Z1FC	Directional Gyro	673447	2
Z1FD	Signal Summing Unit / RH Wing Fillet	C75506	98
Z1MR	Data Aquisition Unit / Nose Compartment	B529	84
Z2FB	MD-1 Vertical Gyro	124623-01-10 (-14)	9
Z2FC	Flux Valve / LH wing	656767	57
Z2MR	Nz/Roll Transducer/Engine Bay	B530	27
Z2P	Voltage Reg / Nose Compartment	VR1010-24-2A	3
Z3MR	Pressure Transducer / RH Wing Fillet	B531	24
Z4MR	Data Acquisition Unit w/Engine Monitoring System (Nose Compartment)	C-10117-1	84
Z4WA	Master Warn Box / Instr Pnl	4140-100-7M	92
077P	Back-up Strain Gauge / Vertical Stab / Base	DTD2684-1	43
078P	Master Strain Gauge / Vertical Stab / Base	DTD2684-1	43

Figure 1-3 (Sheet 40 of 42) Electrical Equipment Location/Reference Designator List

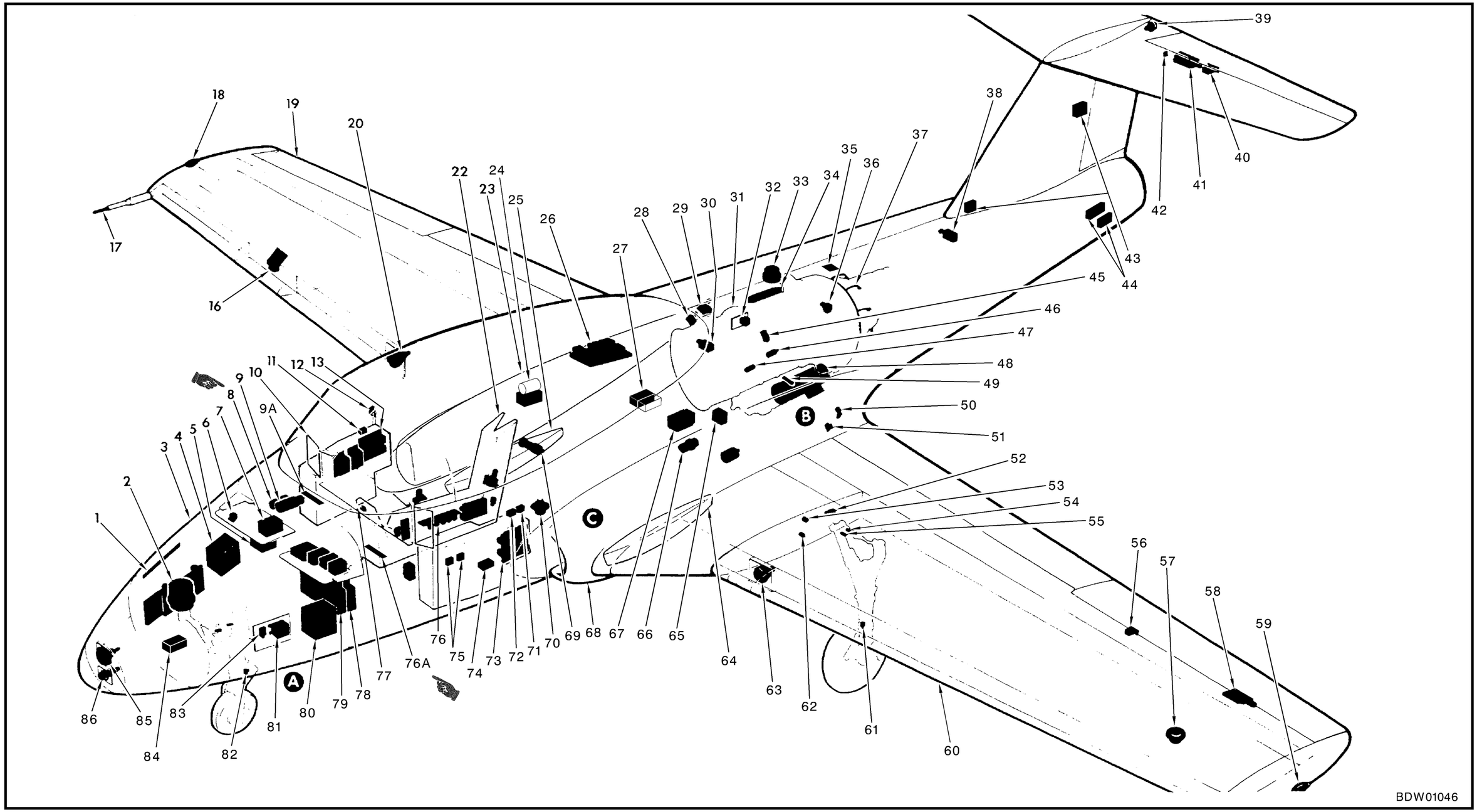

Electrical Equipment Location/Reference Designator List (Sheet 41 of 42) Figure 1-3

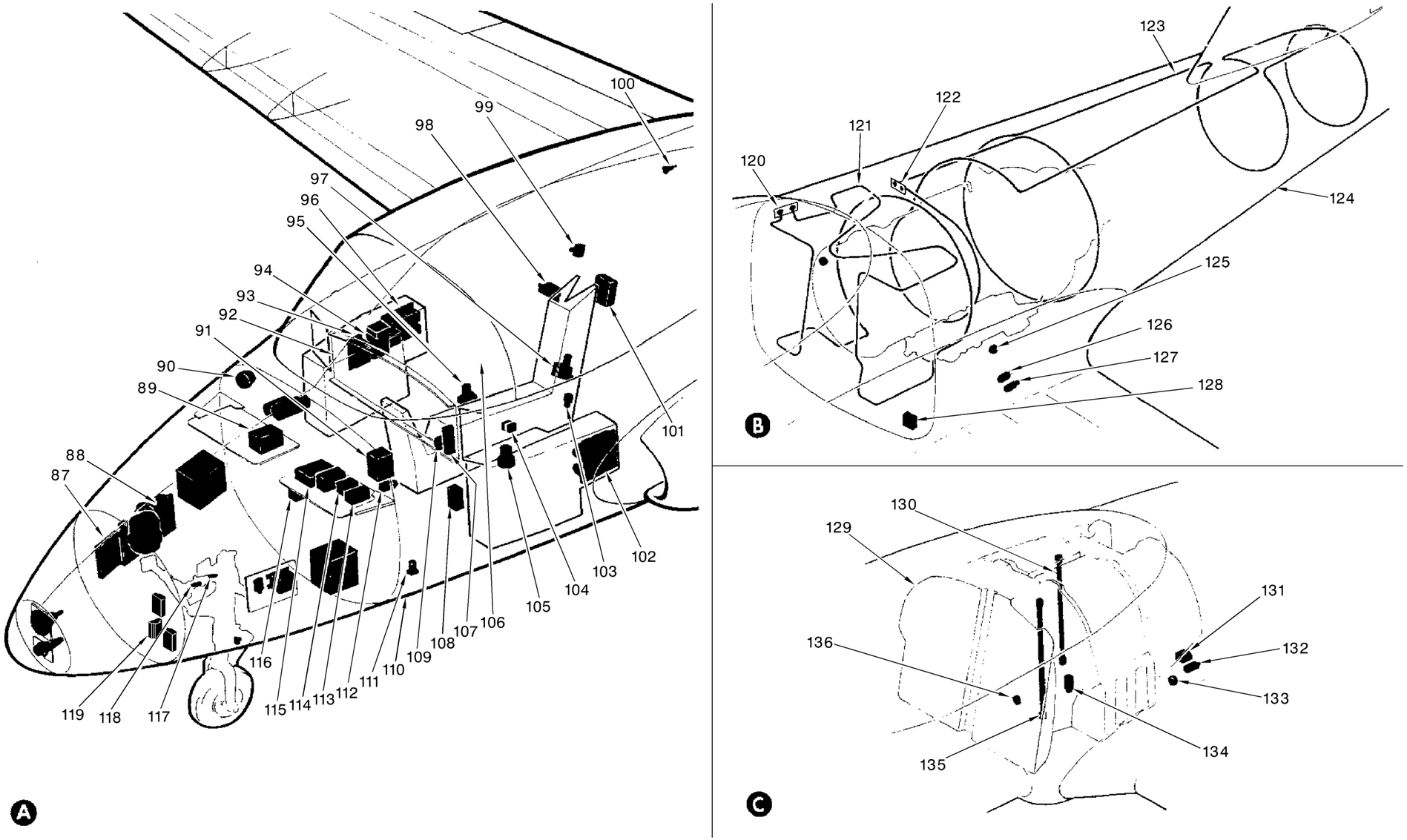

BDW01047

Electrical Equipment Location/Reference Designator List (Sheet 42 of 42) Figure 1-3

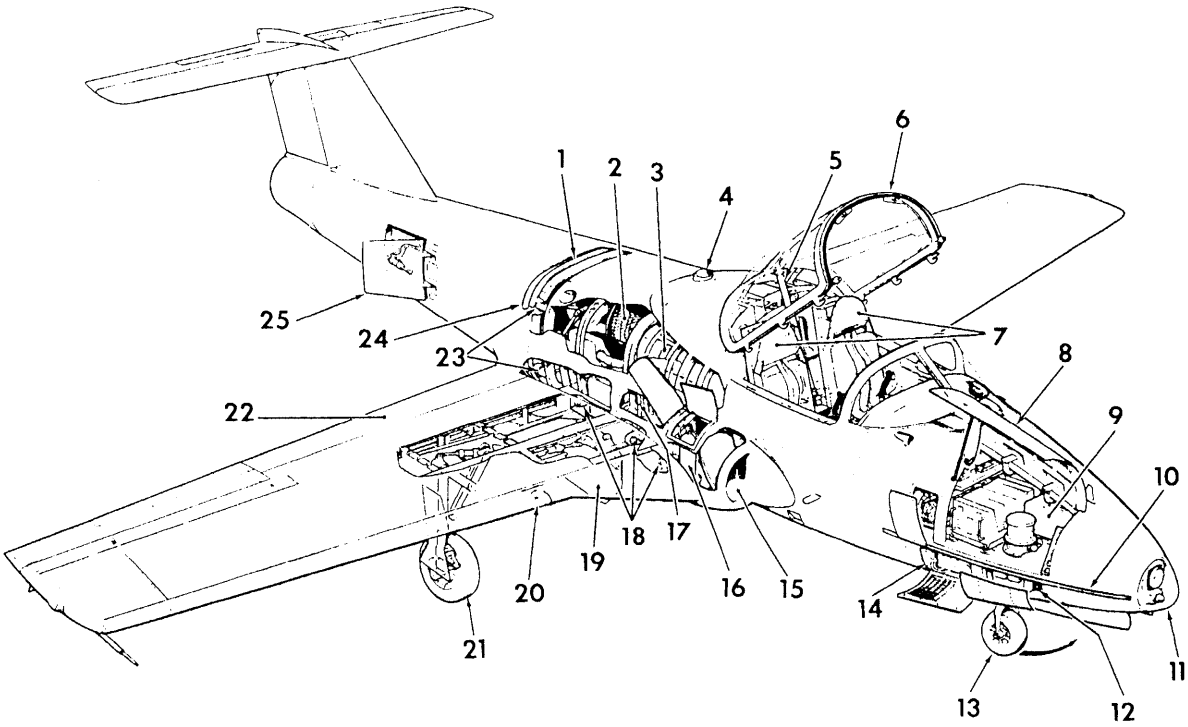

1 FUSELAGE BREAK
2 ENGINE COMPARTMENT
3 FIVE FLEXIBLE FUEL CELLS
4 ANTI-COLLISION LIGHT - UPPER AND LOWER
5 CANOPY OPERATING AND EJECTION MECHANISM
6 ELECTRICALLY OPERATED JETTISONABLE CANOPY
7 UPWARD EJECTION SEATS
8 ELECTRONIC COMPARTMENT ACCESS (ONE EACH SIDE)
9 ELECTRONIC EQUIPMENT COMPARTMENT
10 NOSE STRAKE
11 TAXI AND GROUND OBSERVER LIGHTS
12 ELECTRICAL RELAY PANELS (ONE EACH SIDE)
13 FORWARD RETRACTING STEERABLE NOSE WHEEL
14 28-VOLT 22-AMP/HR NICKEL CADMIUM BATTERY (ONE EACH SIDE)
15 ENGINE AIR INTAKE
16 GASEOUS OXYGEN BOTTLE (ONE EACH SIDE)
17 PERSONAL BAGGAGE STOWAGE
18 WING-TO-FUSELAGE ATTACHMENT POINTS
19 MAIN GEAR DOOR - CLOSED WHEN GEAR IS LOCKED DOWN
20 LANDING LIGHTS
21 MAIN GEAR
22 FLAPS
23 ENGINE BEARERS
24 REAR FIREWALL
25 SPEED BRAKE

BDW01048

Figure 1-4 Aircraft – General Arrangement

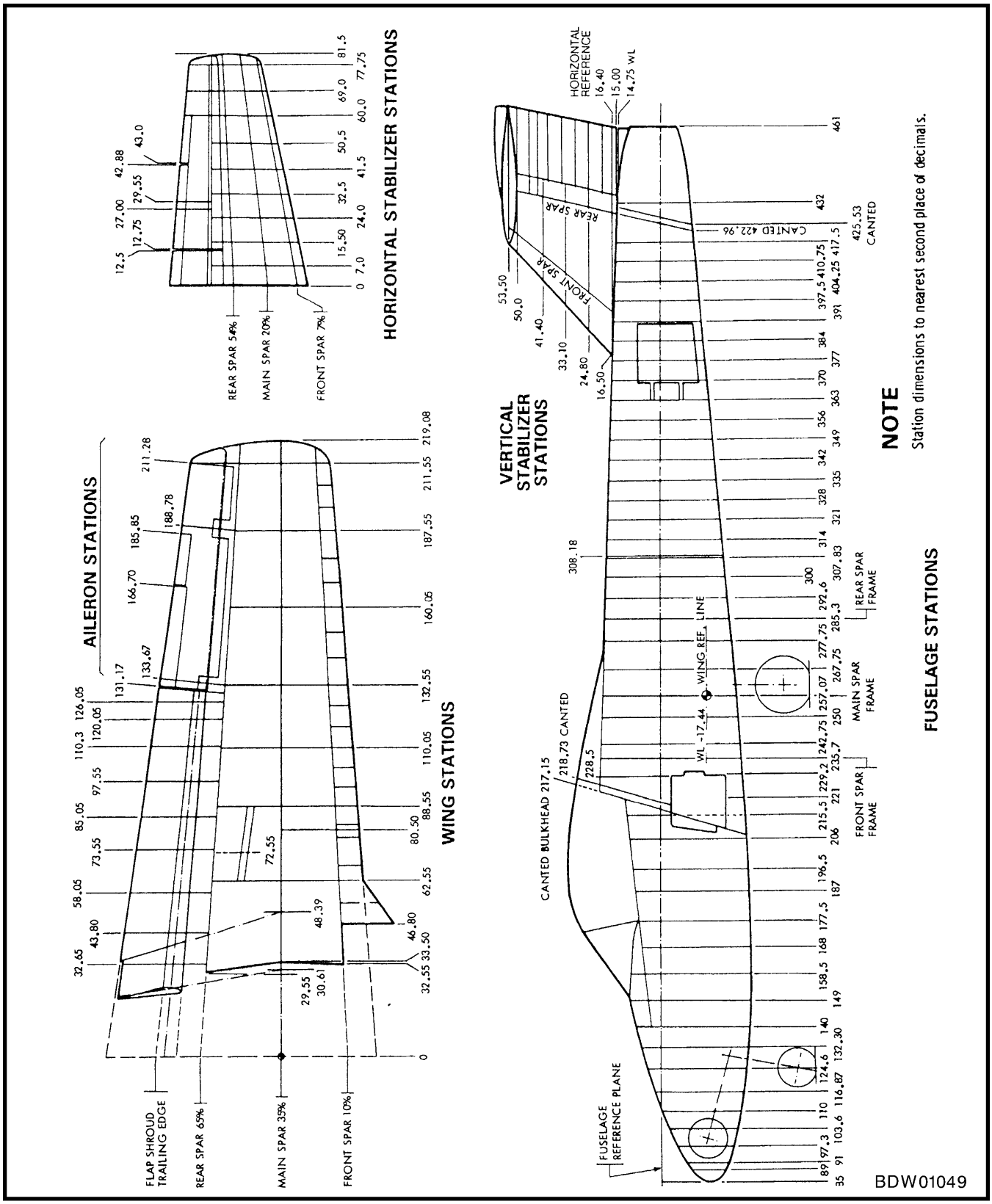

Figure 1-5 Aircraft Stations Diagram

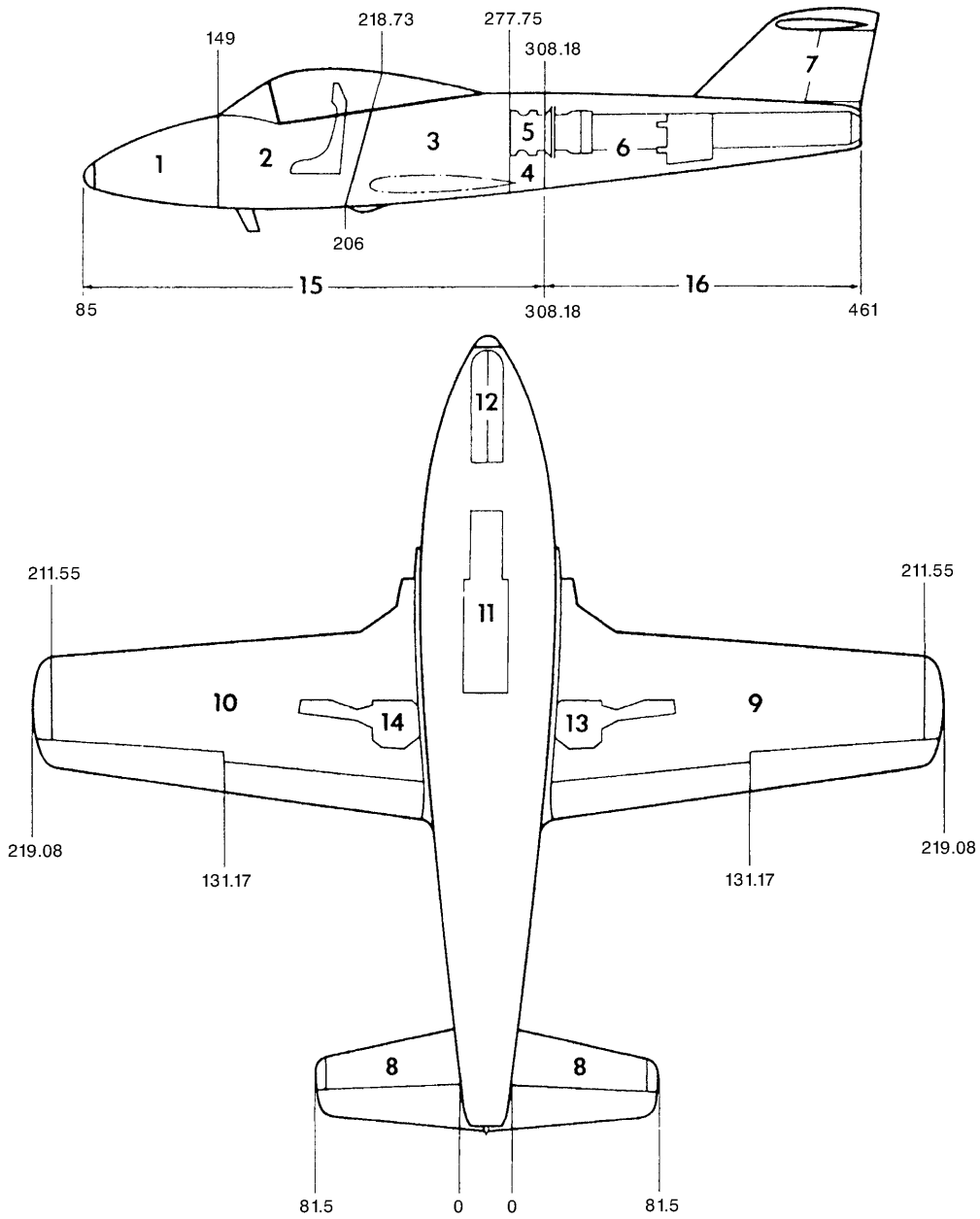

1 ELECTRICAL AND RADIO COMPARTMENT
2 COCKPIT AND CANOPY
3 FUEL CELLS COMPARTMENT
4 ENGINE BAY
5 ENGINE
6 AFT FUS INTERIOR AND ENGINE JET PIPE
7 VERTICAL STABILIZER AND RUDDER
8 HORIZONTAL STABILIZER AND ELEVATORS
9 WING - AILERON AND FLAP PORT
10 WING - AILERON AND FLAP STBD
11 TROUGH
12 NOSE GEAR
13 MAIN LANDING GEAR PORT
14 MAIN LANDING GEAR STBD
15 FWD FUS EXTERIOR
16 REAR FUS EXTERIOR

BDW01050

Figure 1-6 Aircraft Areas Diagram

PANEL	ACCESS TO
3 -1	RH CENTRE CELL, CAPACITANCE PROBE
-3	FUEL TANK FILLER CAP
-5	FUEL LINE ELBOW
-7	AIR CONDITIONER LINE, N-42
-9	FUEL LINES, VENT CHECK VALVE, AIR CONDITIONER LINE, ELEVATOR AND RUDDER CONTROLS
-11	CANOPY LINKAGE
-13	FUEL SYSTEM ELBOW
-15	FUEL LINES
-17	CANOPY CROSS-SHAFT
-19	PANEL 3-9
7 -1	RUDDER BOTTOM ATTACHMENT POINT
-3	RUDDER TOP HINGE
8 -1	HORIZONTAL STABILIZER FORWARD ATTACHMENT POINT
-3	TORQUE SHAFT ATTACHMENT BEARING BOLTS
-5	TORQUE SHAFT ATTACHMENT BEARING BOLTS
-7	ELEVATOR CONTROL
-9	HORIZONTAL STABILIZER FAIRING
9 -1	AILERON OUTBOARD HINGE
-3	AILERON OUTBOARD HINGE
-5	AILERON SPRING TAB TORQUE TUBE
-7	FLAP ACTUATOR
9	FLAP ACTUATOR
-11	FLAP INTERCONNECTING ROD
-13	HYDRAULIC CONNECTORS
-15	HYDRAULIC LINES
-17	IFF
-19	LEADING EDGE HINGE PINS
-21	AILERON INBOARD HINGE AND AILERON RODS
-23	LEADING EDGE HINGE PINS
-25	HYDRAULIC LINES
27	WING ATTACHMENT TOP BOLTS
29	PERSONAL STOWAGE, COMPUTER STALL WARNING
31	OXYGEN BOTTLE, J34, J42, J44, J46
33	PITOT BOOM ATTACHMENT

PANEL	ACCESS TO
10 -1	EXTERNAL POWER SUPPLY
-3	FLAP TRANSMITTER AND TB33
-5	FLAP INTERCONNECTING ROD
-7	FLAP ACTUATOR
-9	FLAP ACTUATOR
-11	AILERON SPRING TAB TORQUE TUBE AND RELAY
-13	AILERON TRIM ACTUATOR
-15	AILERON TRIM ACTUATOR SCREW
-17	OUTBOARD HINGE
-19	AILERON OUTBOARD HINGE
-21	OXYGEN BOTTLE, CONNECTORS J36, J38 AND J40
-23	PERSONAL STOWAGE
-25	WING ATTACHMENT TOP BOLT
-27	FLAP FOLLOW-UP MECHANISM
-29	LEADING EDGE HINGE PINS
-31	AILERON INBOARD HINGE
-33	LEADING EDGE HINGE PINS
-35	FLUX GATE VALVE
-37	OXYGEN CHARGING
15 -1	OIL TANK FILLER
-3	FUEL CELL ACCESS
-5	NO. 2 INVERTER, COCKPIT SAFETY VALVE, N2 AND N3
-7	BATTERY
-9	NO. 1 AND NO. 2 INVERTERS
-11	CIRCUIT-BREAKERS
-13	ELEVATOR AND RUDDER CONTROLS
-15	VENT LINES, ENGINE FRONT MOUNT
16 -1	ELEVATOR CONTROL
-3	HINGE
-5	HINGE
-7	HINGE
-9	JET PIPE CLAMP
-11	FUSELAGE ATTACHMENT BOLTS
-13	ENGINE IGNITER
-15	FIREWALL, CONTROL RODS
-17	FUSELAGE ATTACHMENT BOLT

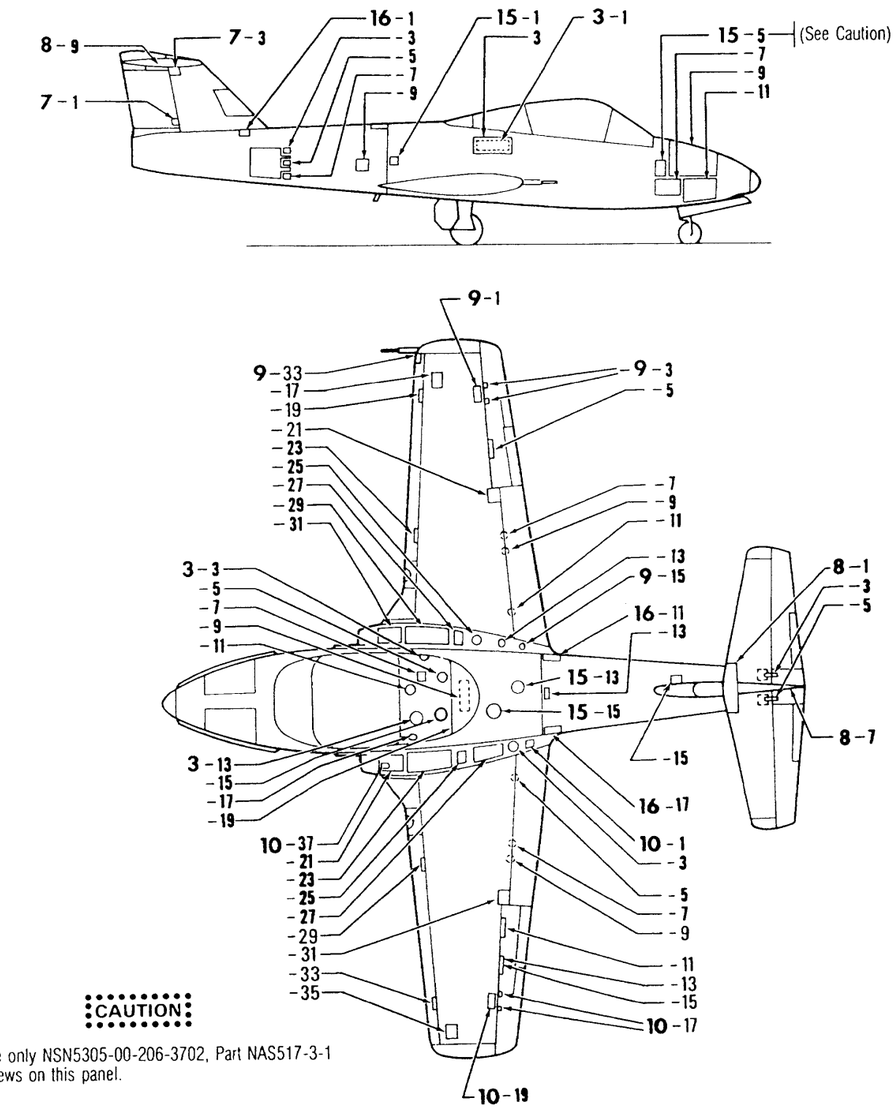

CAUTION

Use only NSN5305-00-206-3702, Part NAS517-3-1 screws on this panel.

BDW01051

Access Panels (Sheet 1 of 2) Figure 1-7

PANEL	ACCESS TO
3 -2	LH FUEL CELL
7 -2	ELEVATOR CONTROL
-4	TOP RUDDER ATTACHMENT
-6	RUDDER BOTTOM ATTACHMENT BOLTS
8 -2	HORIZONTAL STABILIZER REAR ATTACHMENT POINT, TB18
-4	TORQUE SHAFT BEARING ATTACHMENT BOLTS
-6	TORQUE SHAFT BEARING ATTACHMENT BOLTS
-8	HORIZONTAL STABILIZER REAR ATTACHMENT POINT
-10	ELEVATOR TRIM ACTUATOR AND RELAY
-12	ELEVATOR DOWNSPRING
9 -2	LEADING EDGE HINGE PINS
-4	STALL WARNING
-6	PYLON ATTACHMENT
-8	LEADING EDGE HINGE PINS
-10	LANDING LIGHT
-12	MAIN SPAR ATTACHMENT
-14	FRONT SPAR ATTACHMENT
-16	COMPUTER STALL WARNING
-18	STRUCTURE
-20	AILERON SPRING TAB TORQUE TUBE
-22	LANDING GEAR MICROSWITCHES
-24	REAR SPAR ATTACHMENT
10 -4	STRUCTURE
-6	FRONT SPAR ATTACHMENT
-8	MAIN SPAR ATTACHMENT
-10	LANDING LIGHT
-12	LEADING EDGE HINGE PINS
-14	PYLON ATTACHMENT
-16	LEADING EDGE HINGE PINS
-18	REAR SPAR ATTACHMENT
-20	LANDING GEAR DOOR GROUND SERVICE SWITCH, LANDING GEAR MICROSWITCH
-22	AILERON SPRING TAB TORQUE TUBE. TRIM RELAY
-24	AILERON TRIM ACTUATOR

PANEL	ACCESS TO
15 -2	CANOPY OPENING GEAR
-4	THROTTLE INTERCONNECT TUBE
-6	CANOPY EMERGENCY RELEASE
-8	GROUND TEST CONNECTION, PRESSURIZING VALVE NO. 1 INVERTER, N23, N24
-10	BATTERY
-12	LEVELLING BLOCKS, FIRE AND OVERHEAT CONTROL BOXES, MAIN UHF, EMERGENCY UHF, IFF, TACAN RECEIVER-TRANSMITTERS, DIRECTIONAL COUPLER, COAXIAL RELAY TEST PANEL, COMPASS AMPLIFIER, NO. 1 AND 2 INVERTERS
-14	NAVIGATION LIGHT FLASHER
-16	HYDRAULIC RESERVOIR
-18	FUEL CELL INNER ACCESS PANEL
-20	ENGINE BAY, GENERATOR
-22	ENGINE BAY, GENERATOR
-24	FUEL DRAIN
-26	WATER SEPARATOR
-28	TACAN ANTENNA
-30	FLIGHT CONTROLS, HYDRAULIC SYSTEM, AIR CONDITIONING
-32	UHF ANTENNA
-34	HYDRAULIC CONNECTIONS
-36	TAXI LIGHT
-38	CONTROLS, BOOSTER PUMP, COLLECTOR TANK
-40	FUEL DRAIN
-42	AIR CONDITIONING UNIT FUEL SHUT-OFF VALVE, FUEL STRAINER, FUEL LOW PRESSURE SWITCH, FLIGHT CONTROLS, AAE FILTER, AUX FUEL AIR PRESSURE S/O VALVES AND SWITCHES
-44	PYLON ELECTRICAL CONNECTION
16 -2	RUDDER CONTROL LINKAGE. JET PIPE ADJUSTMENT AND FIRE WIRE
-4	HINGE
-6	HINGE
-8	HINGE
-10	FLIGHT CONTROLS, FIREX AND JET PIPE
-12	RUDDER CONTROL LINKAGE
-14	FUSELAGE ATTACHMENT BOLT
-16	FUSELAGE ATTACHMENT BOLT

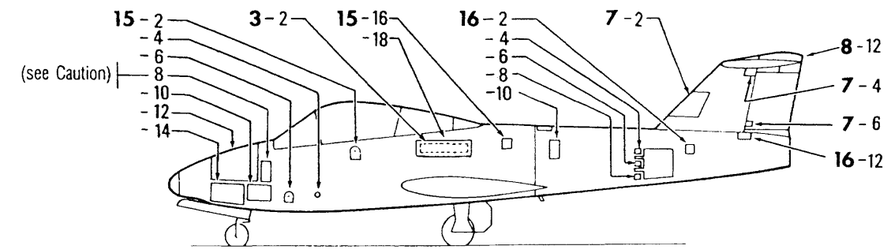

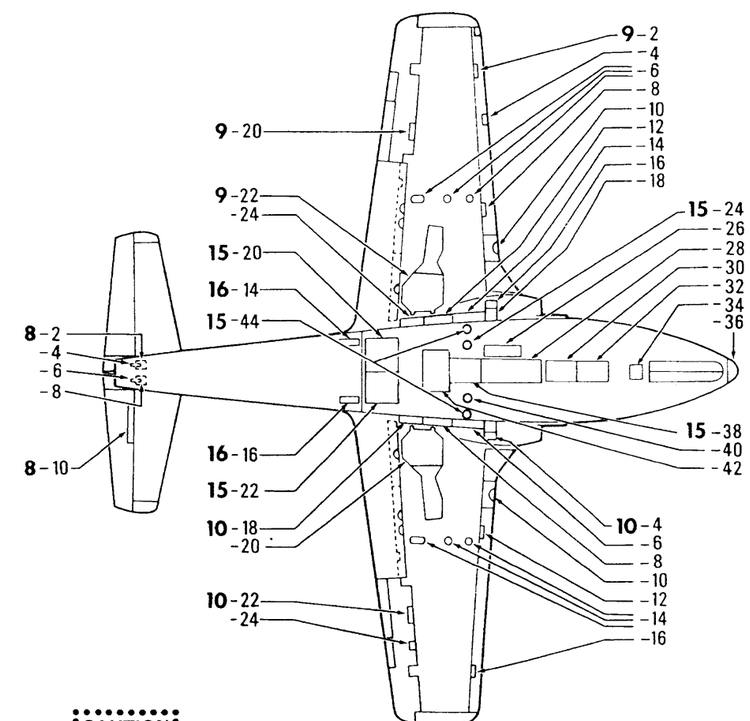

CAUTION

Use only NSN5305-00-206-3702, Part NAS517-3-1 screws on this panel.

BDW01052

Access Panels (Sheet 2 of 2) Figure 1-7

Circuit Function Letters	System	Circuit Function Letters	System
AA EF	Auxiliary Fuel	HB	Windshield De-ice and Demisting
C	Flight Control	J	Engine Control
DA	Wing Flap Position Indication	L	Interior and Exterior Lighting
DB	Hydraulic Pressure Indicator	M	Canopy Control
DC	Fuel Quantity and Low Lever Warning Indicator	MA	Seat Adjust
DD	Registering Accelerometer	P	DC Power Supply
EA	Engine Tachometer	Q	Engine Control (Fuel)
EB	Engine Oil Pressure	RN RNV	VOR-ILS TACAN
EC	Engine Oil Temperature Warning System	RZ	Intercom System
ED	Turbine Exhaust Gas Temperature Indi-cator	SG	Smoke Detector
EE	Fuel Low Pressure Warning System	SX	IFF System
F	Servoed Altimeter System	V	DC Control for AC Power Supply
FA	Turn and Slip Indicator	WA	Master Warning Control
FB	Attitude Indicator	WB	Fire and Overheat Detection
FC	Compass System	X	AC Power Supply
FD	Pre-stall Warning System		
G	Landing Gear Control, Warning and Indication		
GA	Ground Safety		
HA	Air Conditioning System		

Figure 1-8 Table of Item Identification Letters – Wire and Item Circuit Functions

Item Prefix	Type of Equipment	Item Prefix	Type of Equipment
A	Mounting, Panel	LS	Horn, Speaker
AR	Amplifier	M	Counter, Recorder, Meter
B	Motor, Synchro, Blower	N	Ground Stud
BT	Battery	P	Plug
C	Capacitor	PS	Power Supply
CB	Circuit-breaker	R	Resistor, Potentiometer
CR	Rectifier	RT	Thermistor
D	Dynamotor, Inverter	S	Switch
DS	Lighting and Signalling	T	Transformer
F	Fuse, Limiter	TB	Terminal Board
FL	Filter	TC	Thermocouple
G	Generator, Magneto	TR	Transmitter
HR	Heater	U	Hydraulic
J	Receptacle	VR	Voltage Regulator
JB	Junction Box	W	Special Cable Assembly
K	Relay	Z	Networks
L	Solenoid	X	Fuseholders

Figure 1-9 Table of Item Identification Letters – Item Prefix and Type of Equipment

PART 2

ELECTRICAL WIRING DATA

GENERAL INFORMATION

GENERAL

1. Part 2 of this volume contains comprehensive information on the electrical wiring for troubleshooting the CT114 aircraft electrical systems and is best used in conjunction with the appropriate volume on system description and maintenance.

SCHEMATICS AND DIAGRAMS

2. The electrical schematics and wiring diagrams are listed by the title of their respective systems in the List of Figures. They are also to be used as aids when tracing wires for troubleshooting and continuity checks. The wiring diagrams identify the aircraft installation wiring for the equipment systems and, when possible, coincide with aircraft installation.

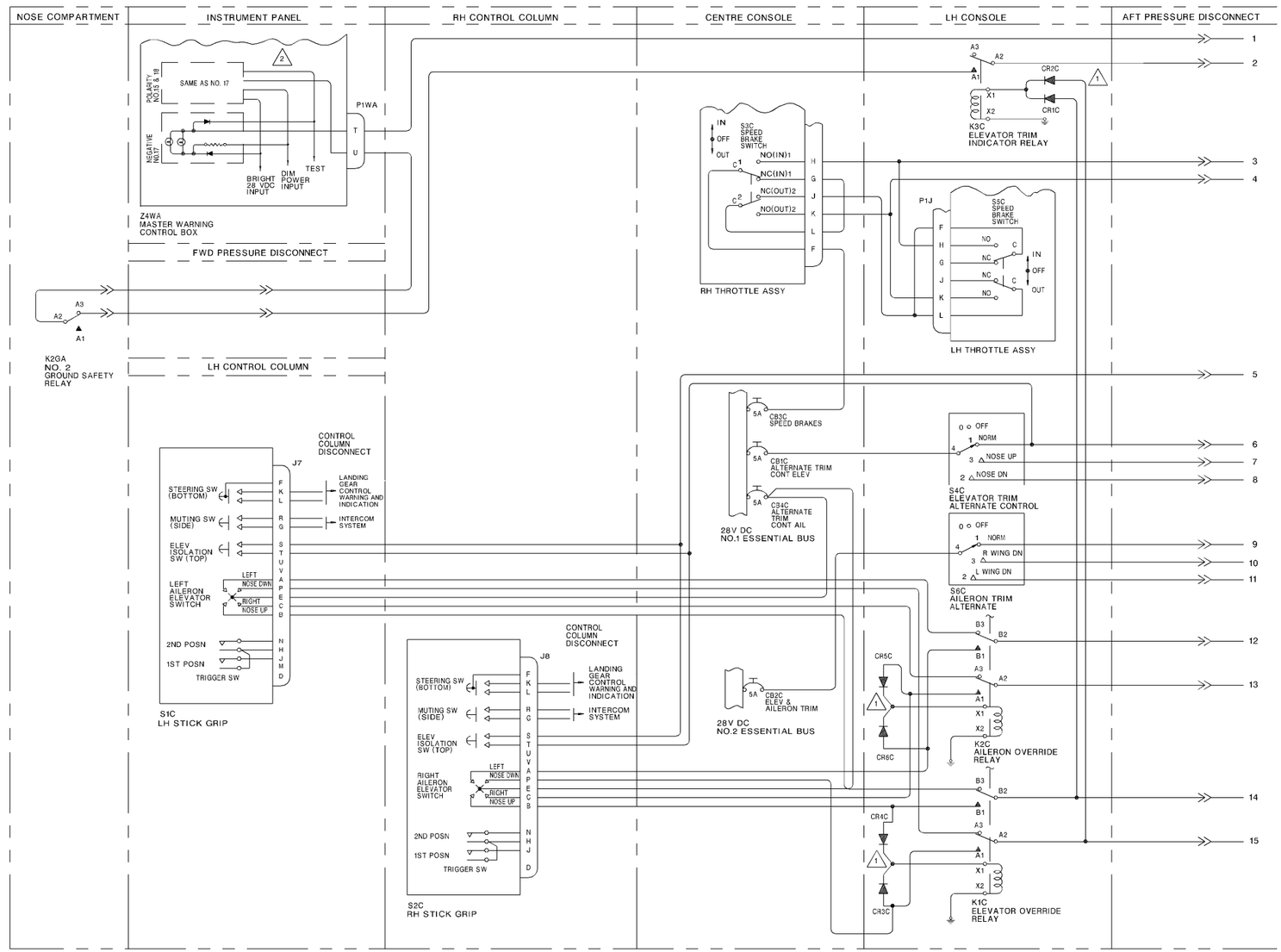

NOTES :

1. COMPONENTS LOCATED IN THE DISCRETE COMPONENT BOX.
2. REFER TO MASTER WARNING CONTROL.

BDW02001

Flight Controls – Schematic (Sheet 1 of 2) Figure 2-1

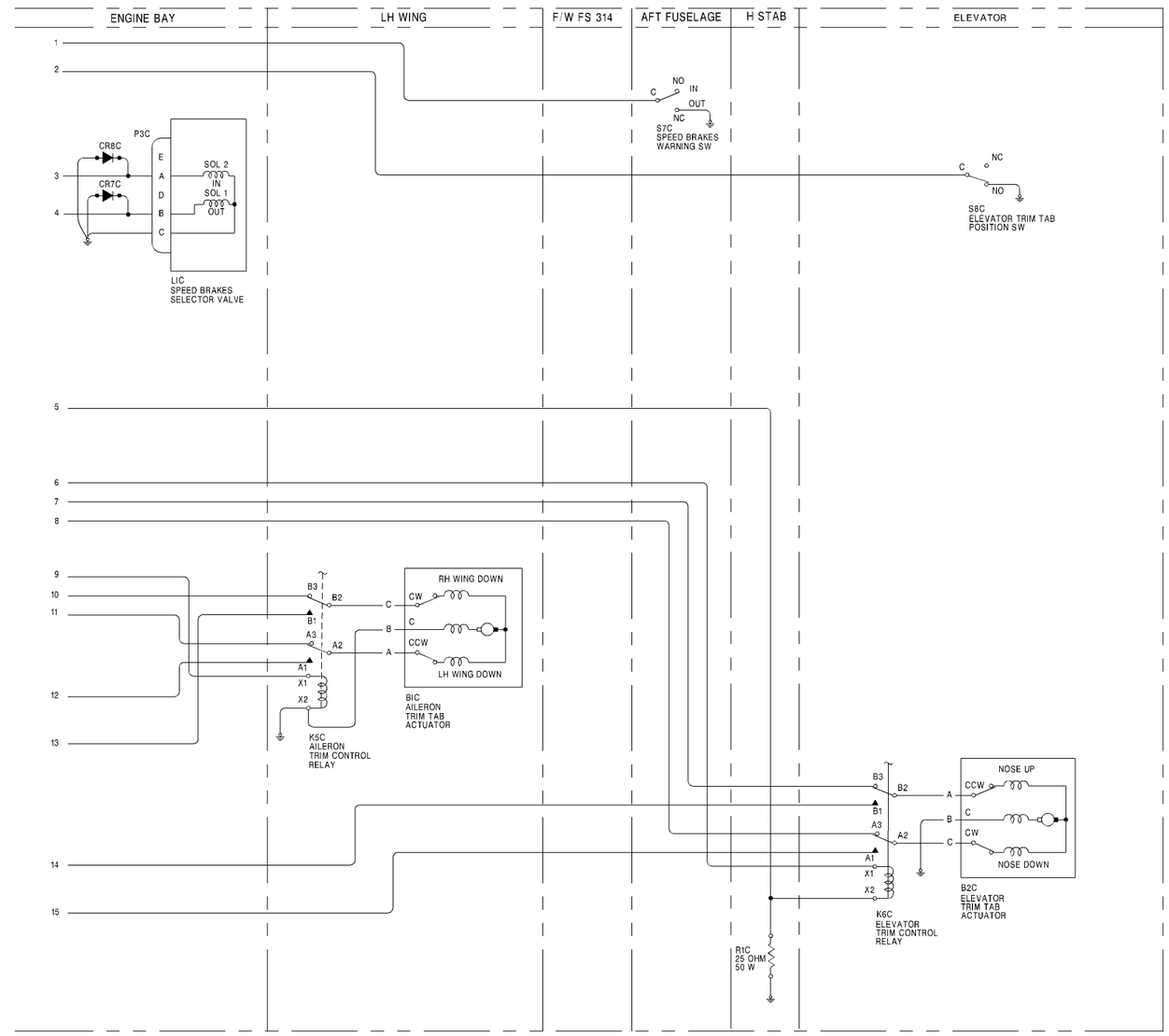

BDW02002

Flight Controls – Schematic (Sheet 2 of 2) Figure 2-1

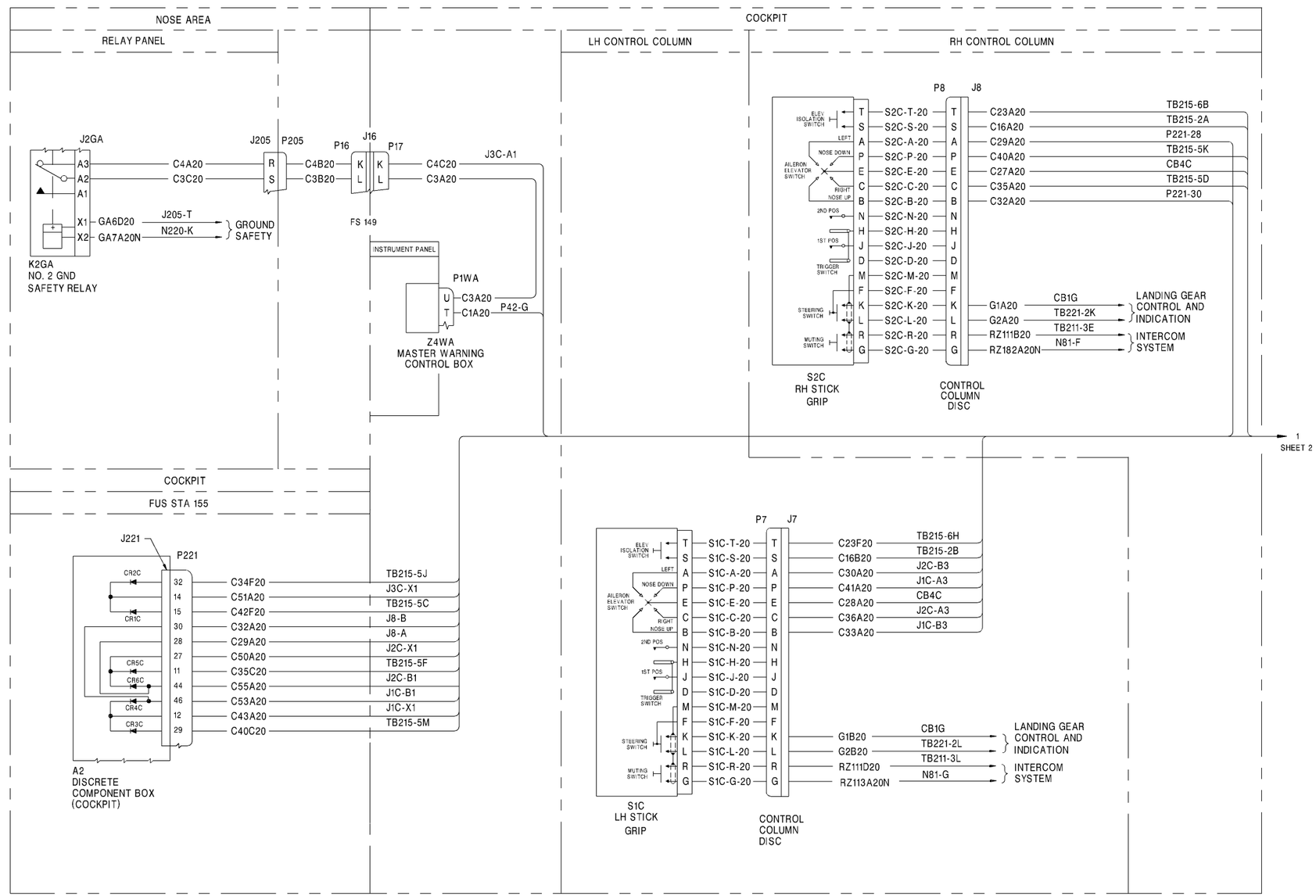

NOTE

1. FOR THROTTLE ASSEMBLY REPLACEMENT, REFER TO THROTTLE ASSEMBLIES - WIRING.

BDW02003

Flight Controls – Wiring (Sheet 1 of 4) Figure 2-2

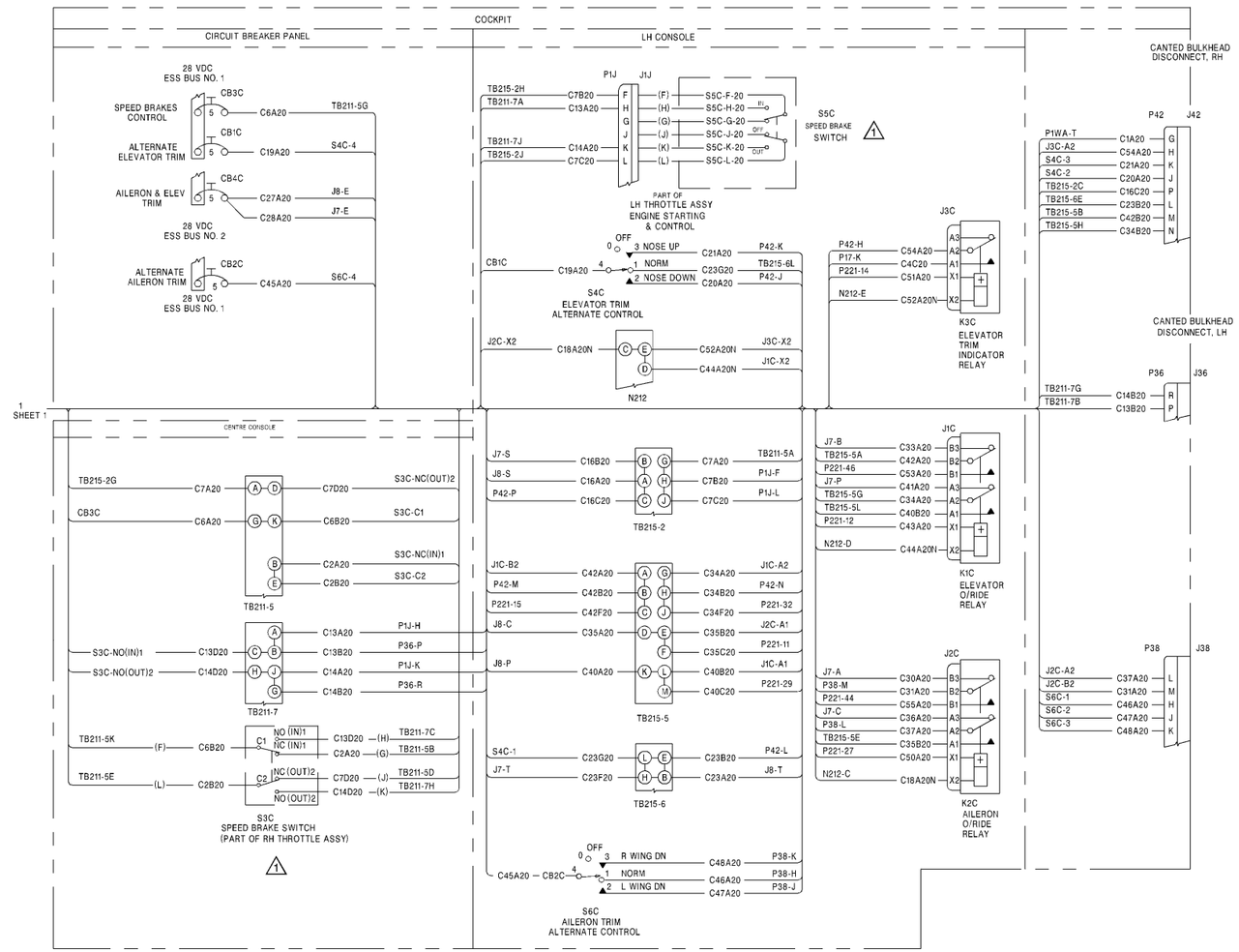

BDW02004

Flight Controls – Wiring (Sheet 2 of 4) Figure 2-2

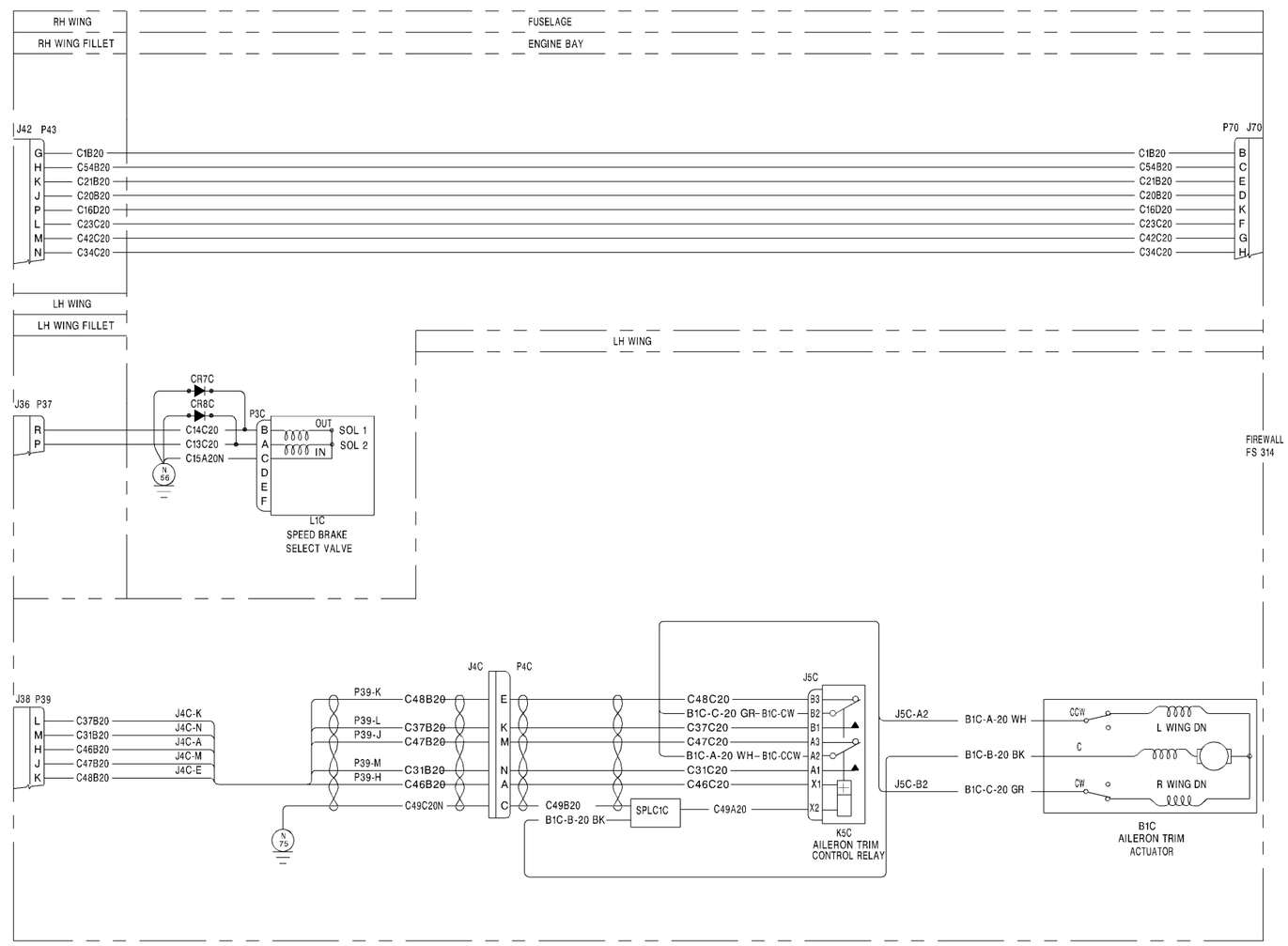

BDW02005

Flight Controls – Wiring (Sheet 3 of 4) Figure 2-2

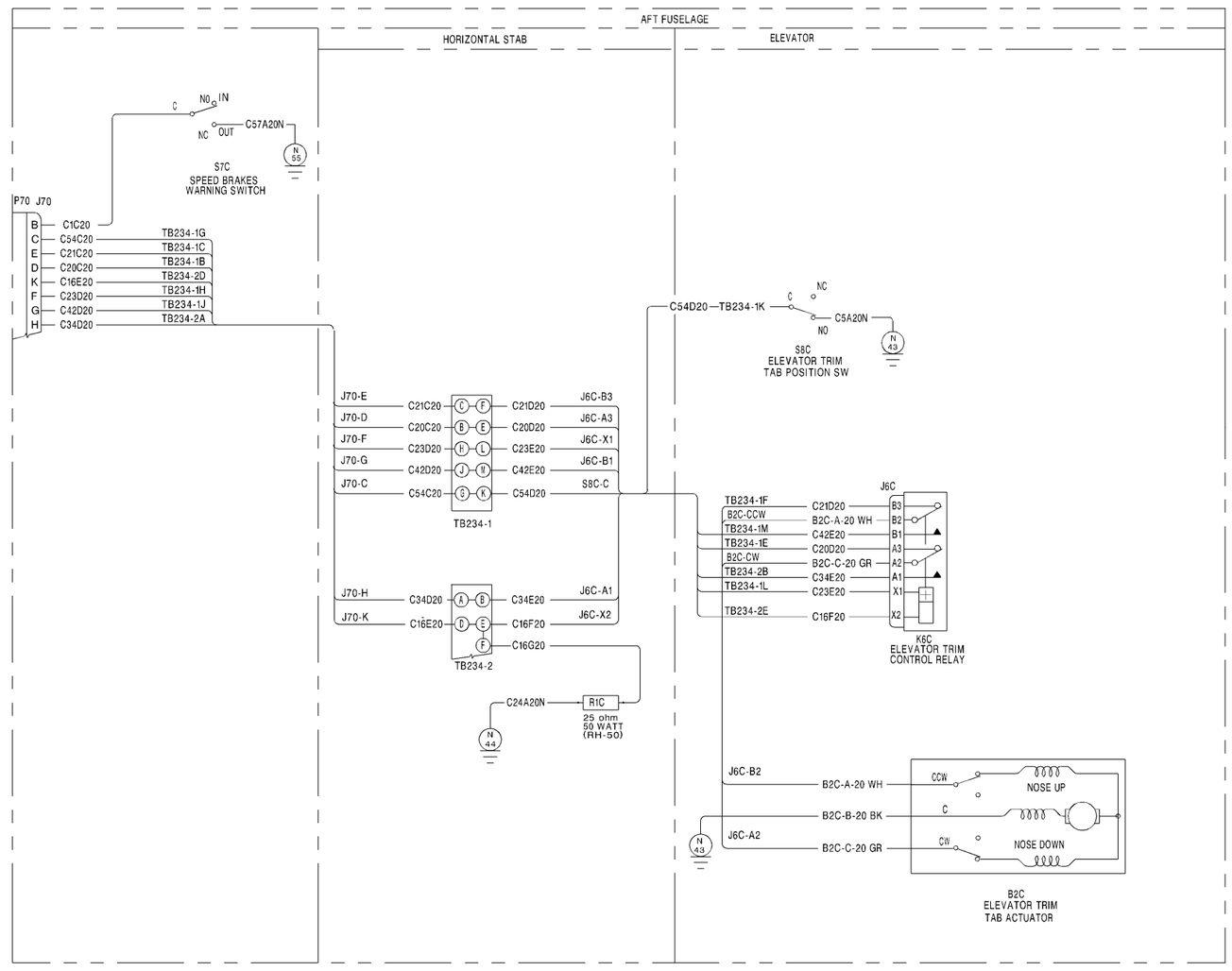

BDW02006

Flight Controls – Wiring (Sheet 4 of 4) Figure 2-2

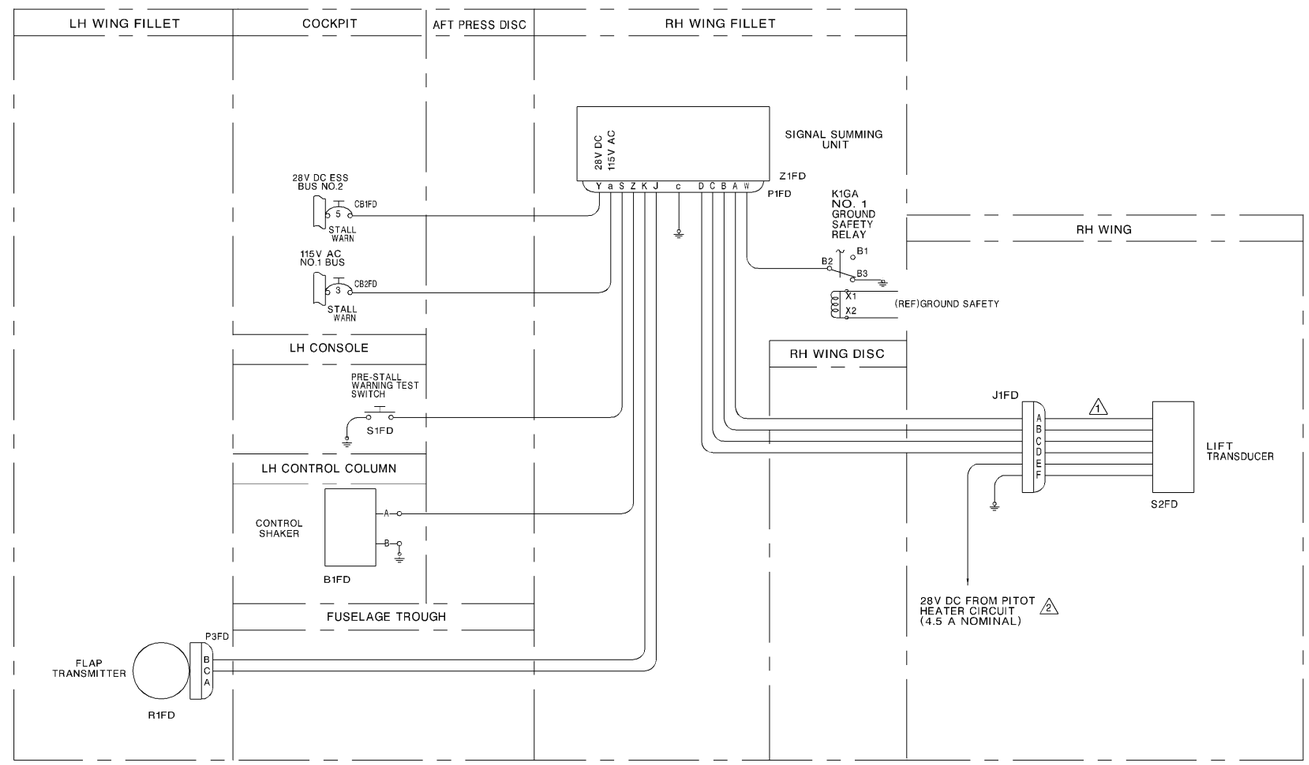

NOTE:

1. PART OF TRANSDUCER PIGTAIL HARNESS ASSY.
2. REFER TO AIR CONDITIONING SYSTEM SCHEMATIC.
3. REFER TO PRE-STALL WARNING SYSTEM.

BDW02007

Pre-Stall Warning System – Schematic Figure 2-3

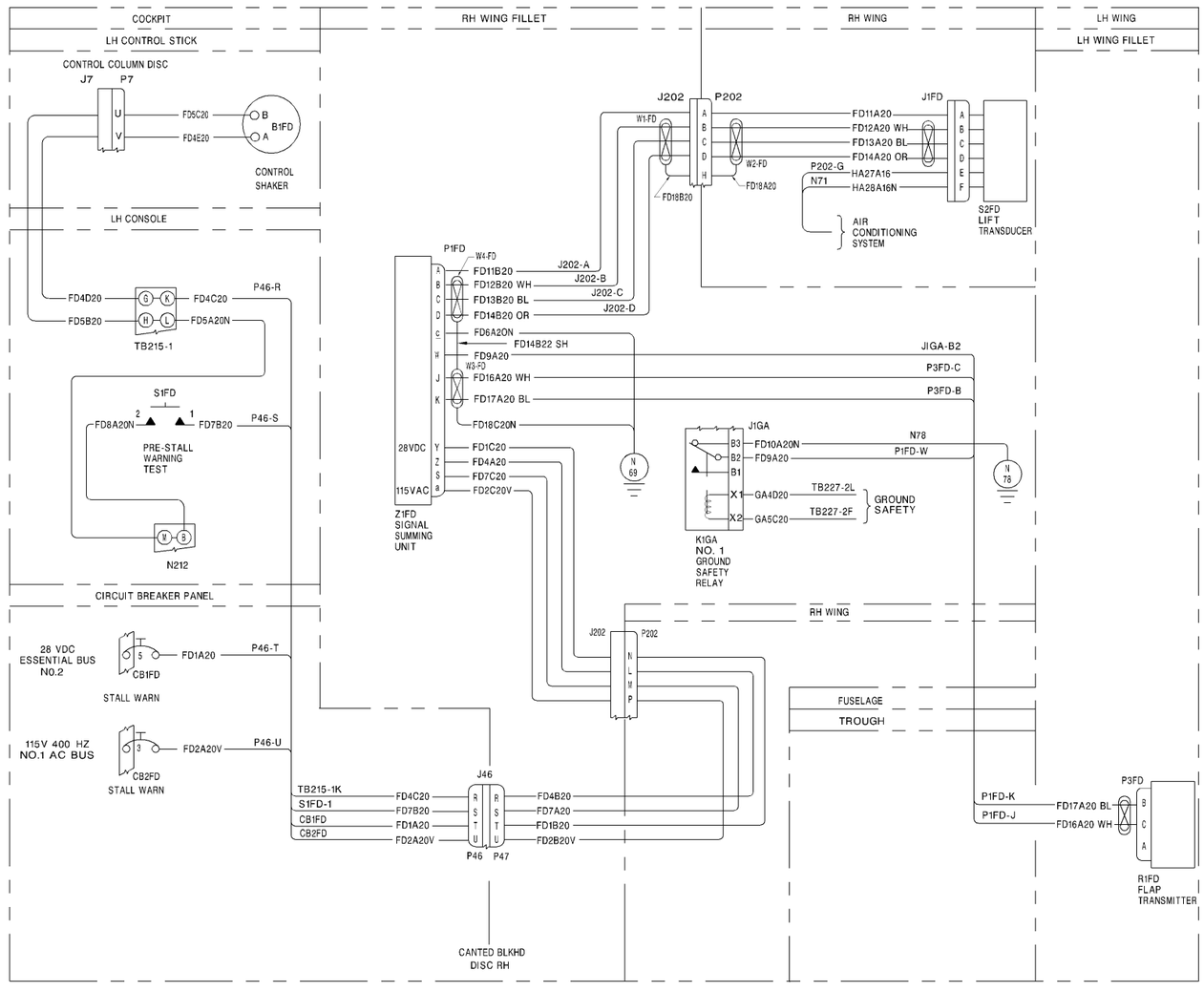

BDW02008

Pre-Stall Warning System – Wiring Figure 2-4

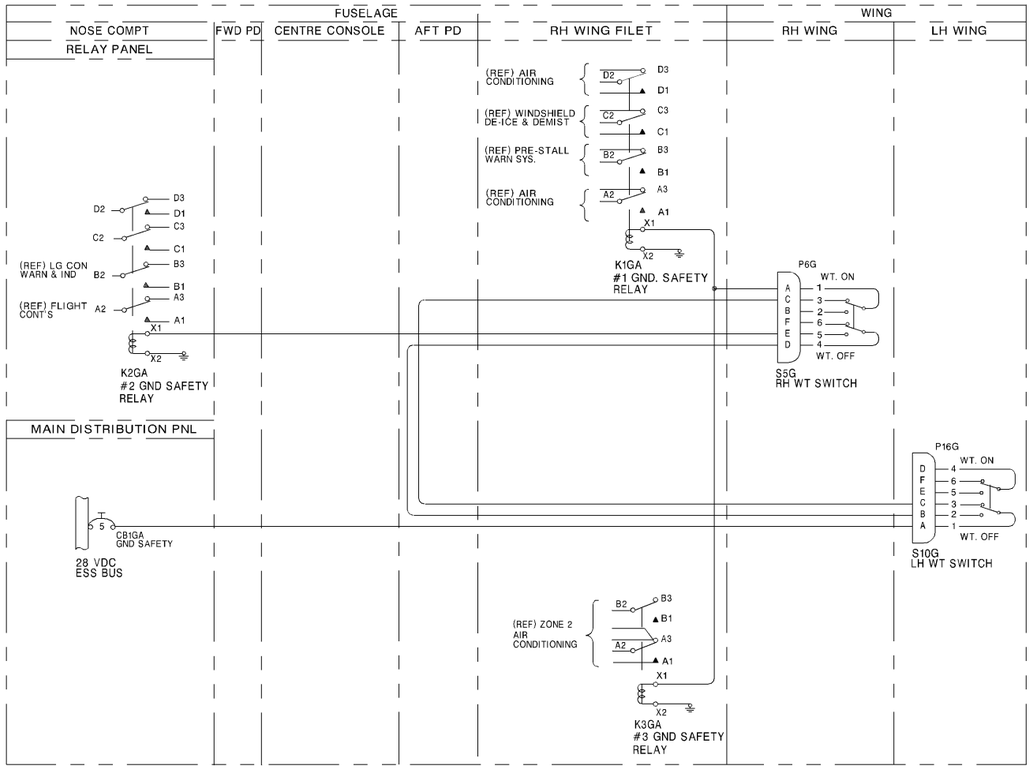

BDW02009

Ground Safety – Schematic Figure 2-5

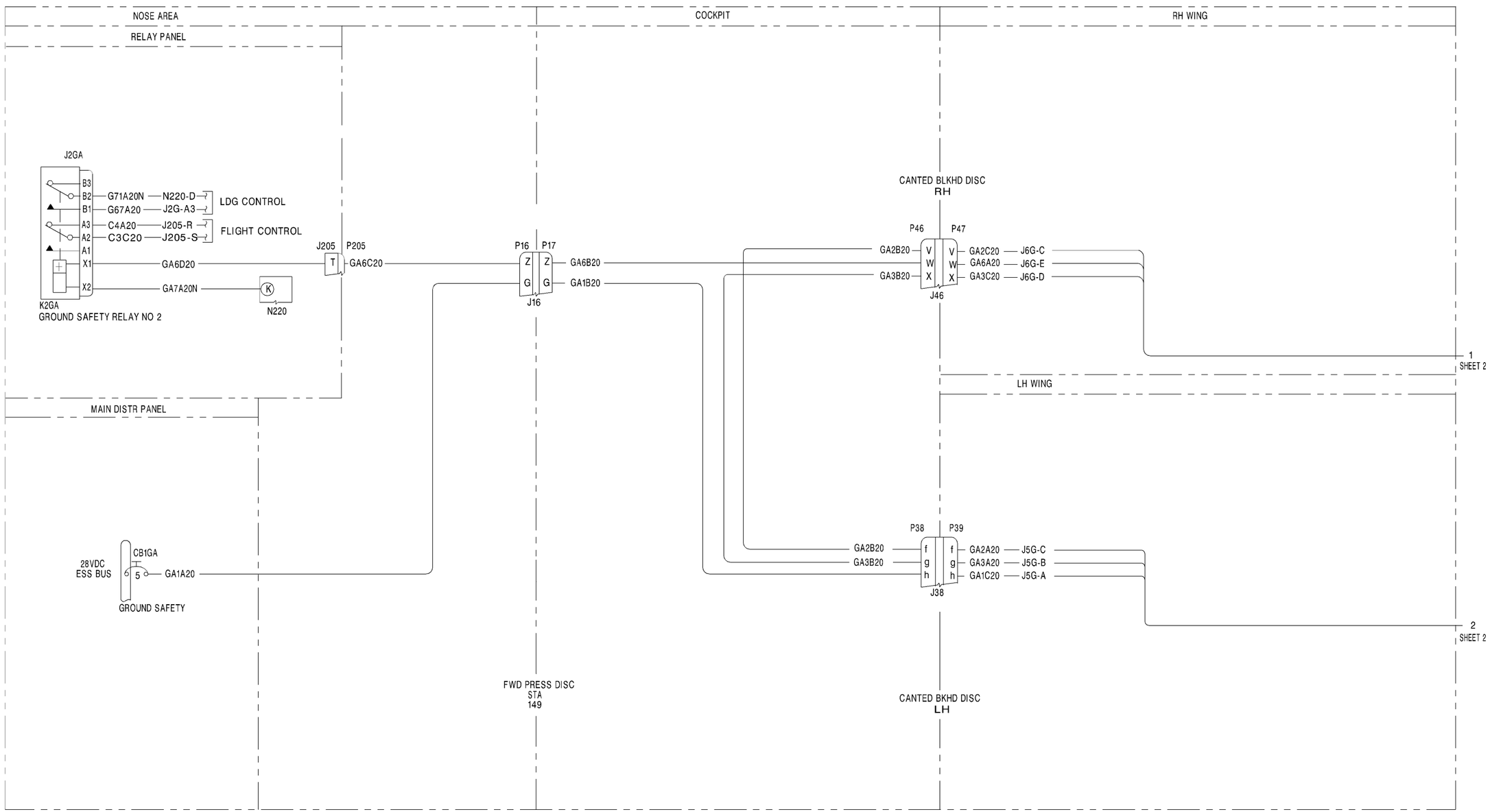

Ground Safety – Wiring (Sheet 1 of 2) Figure 2-6

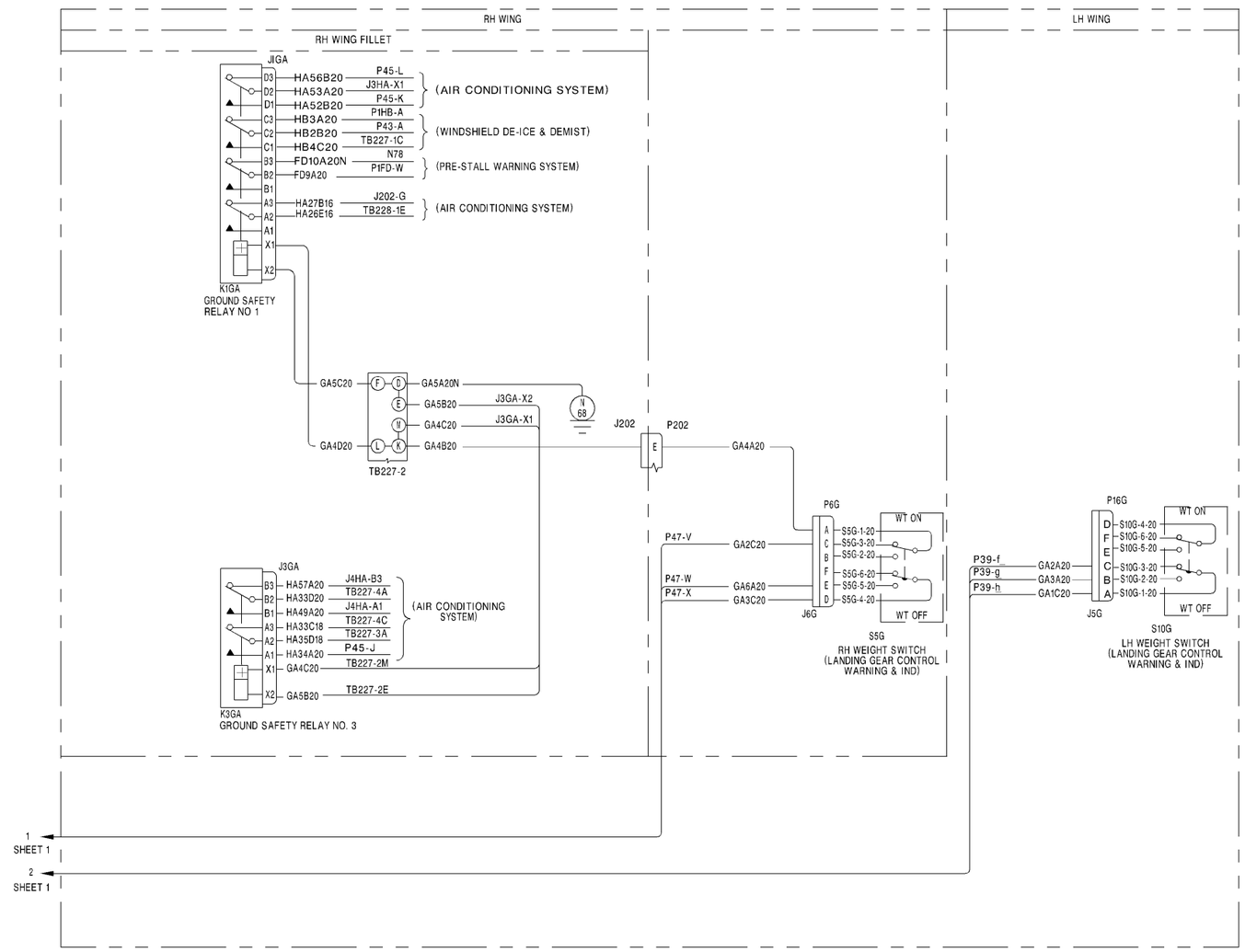

Ground Safety – Wiring (Sheet 2 of 2) Figure 2-6

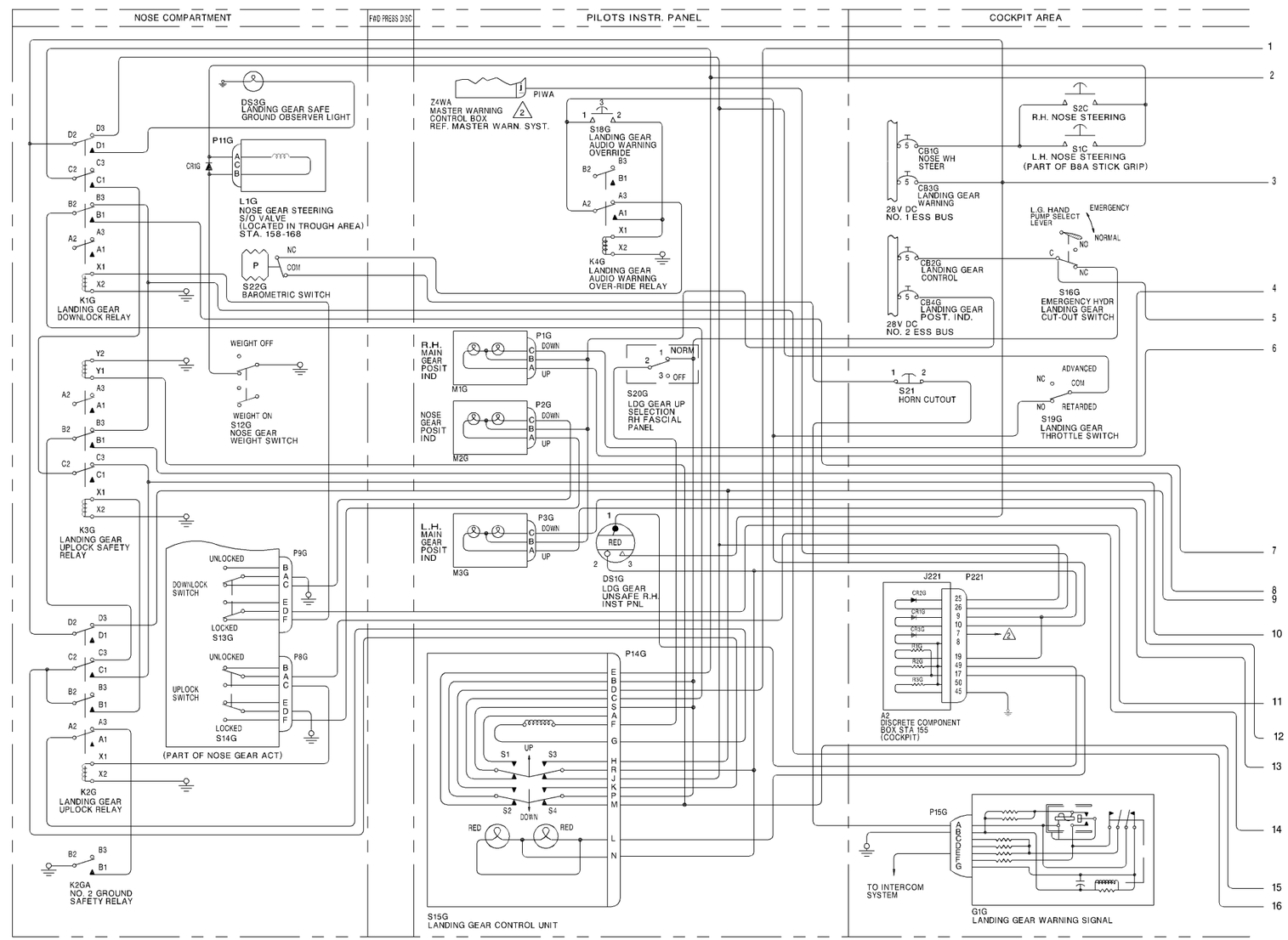

NOTES :

1. LOCATED IN THE DISCRETE COMPONENT BOX AT F.S. 155.
2. FOR CONTINUATION, REFER TO MASTER WARNING CONTROL.
3. REFER TO LANDING GEAR CONTROL WARNING AND INDICATION.

BDW02012

Landing Gear Control Warning and Indication – Schematic (Sheet 1 of 2) Figure 2-7

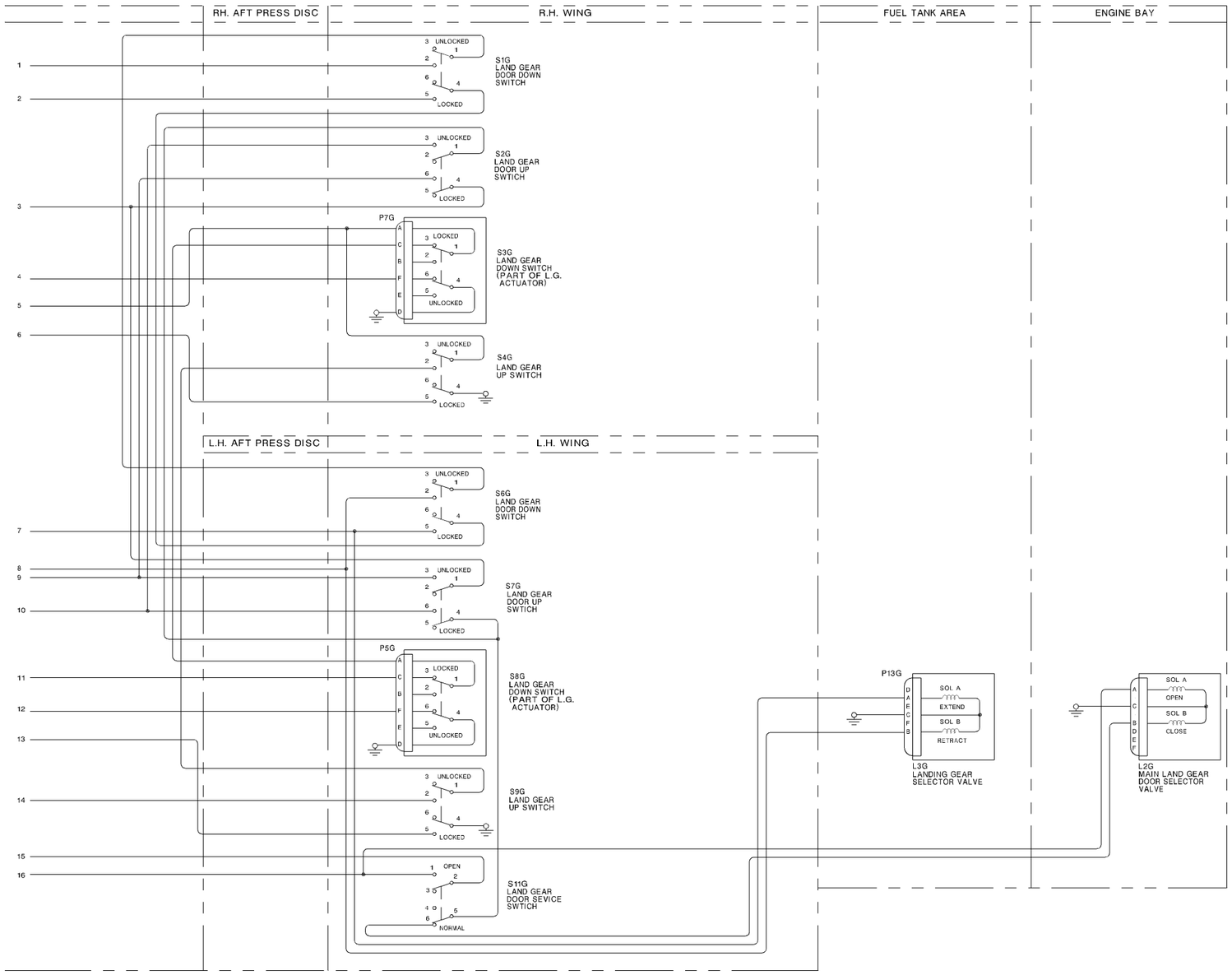

Landing Gear Control Warning and Indication – Schematic (Sheet 2 of 2) Figure 2-7

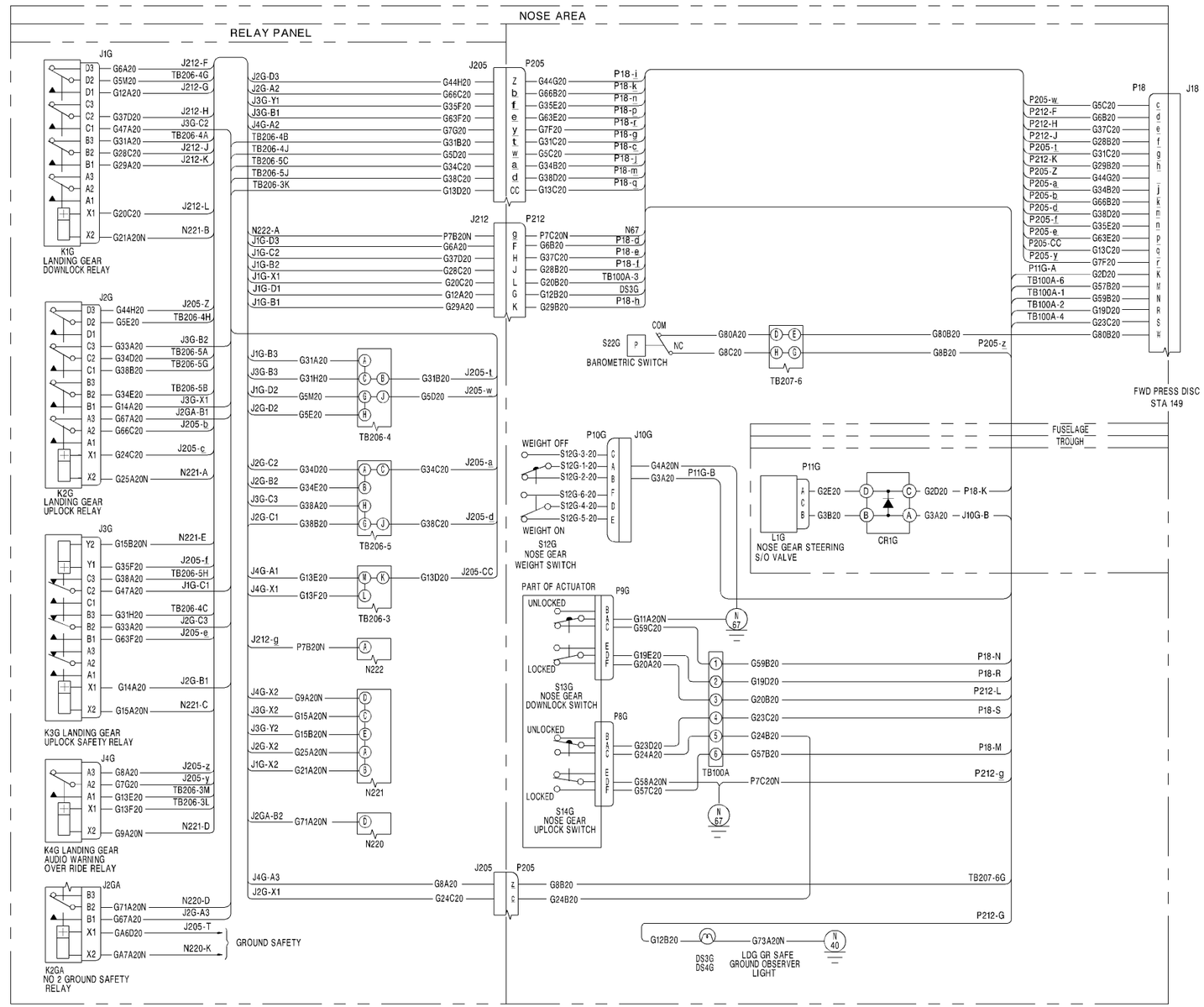

BDW02014

Landing Gear Control Warning and Indication – Wiring (Sheet 1 of 5) Figure 2-8

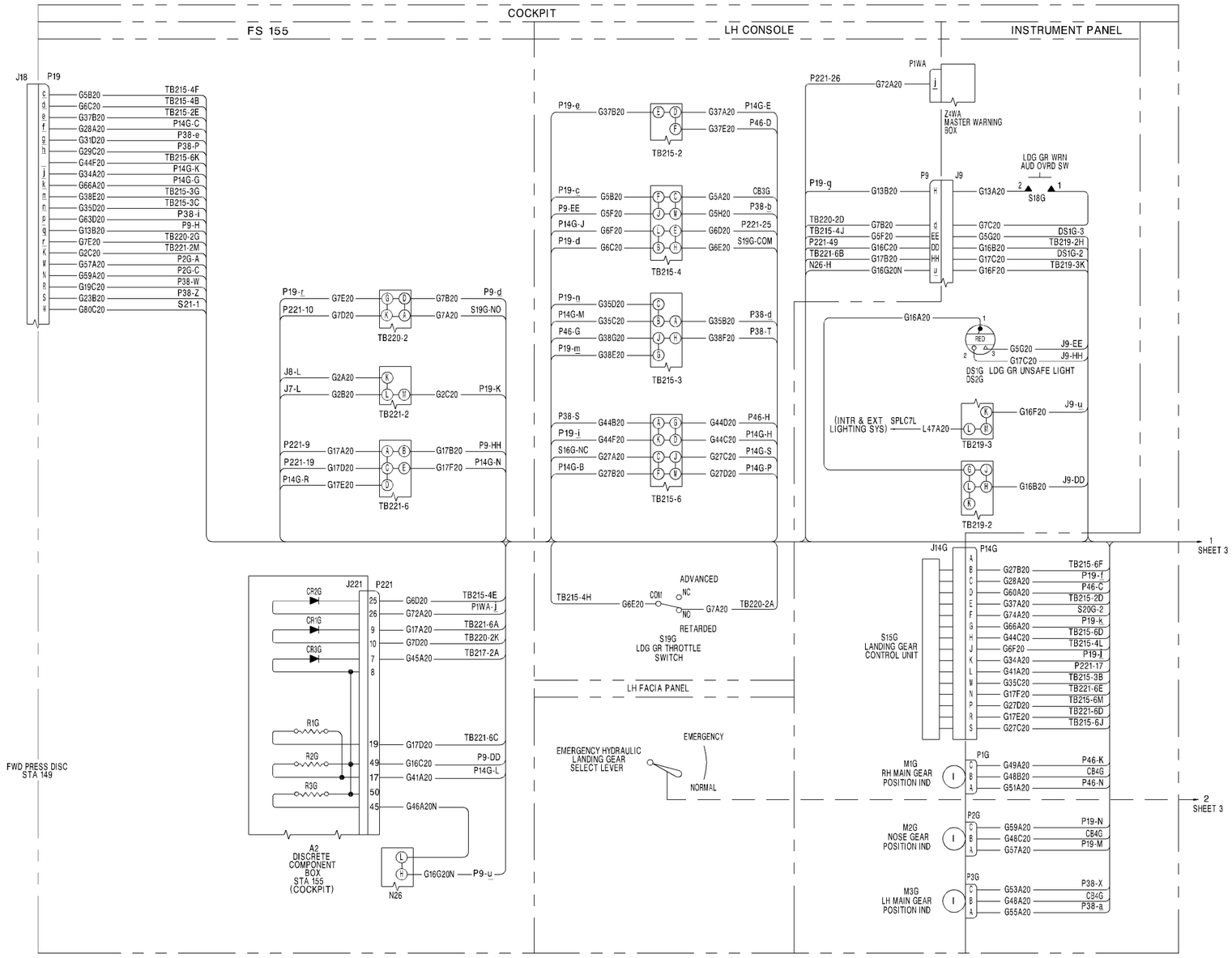

BDW02015

Landing Gear Control Warning and Indication – Wiring (Sheet 2 of 5) Figure 2-8

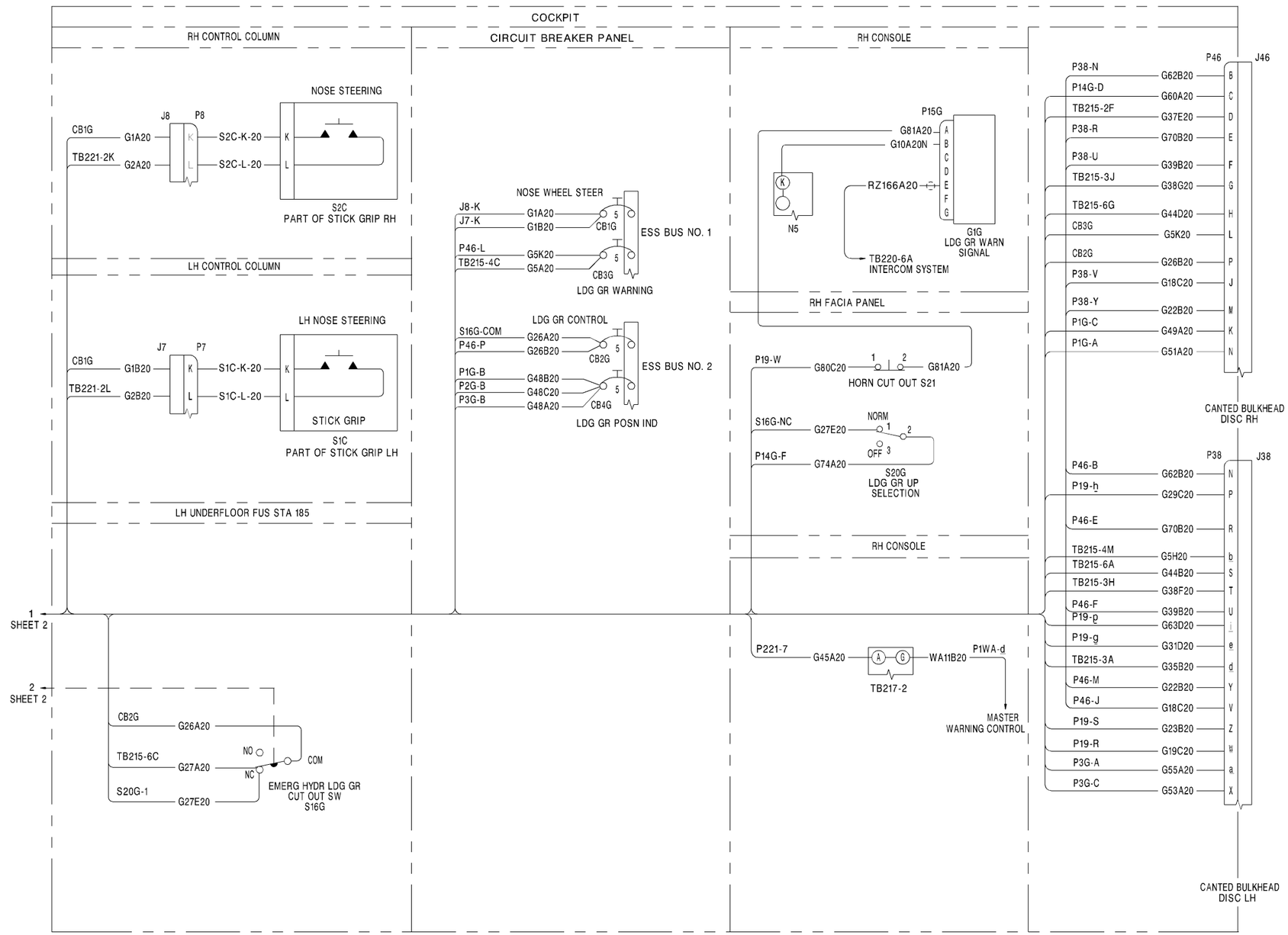

Landing Gear Control Warning and Indication – Wiring (Sheet 3 of 5) Figure 2-8

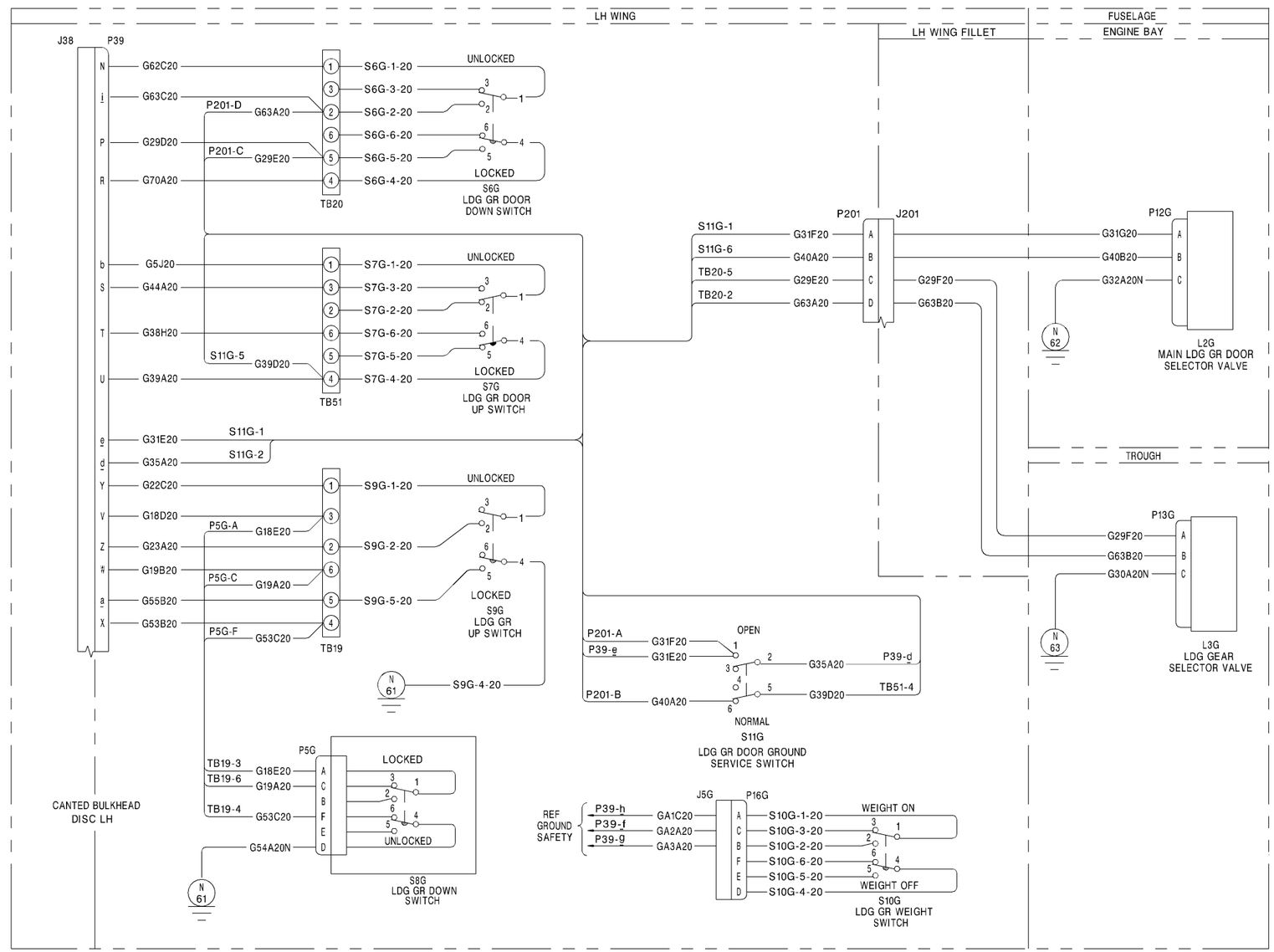

Landing Gear Control Warning and Indication – Wiring (Sheet 4 of 5) Figure 2-8

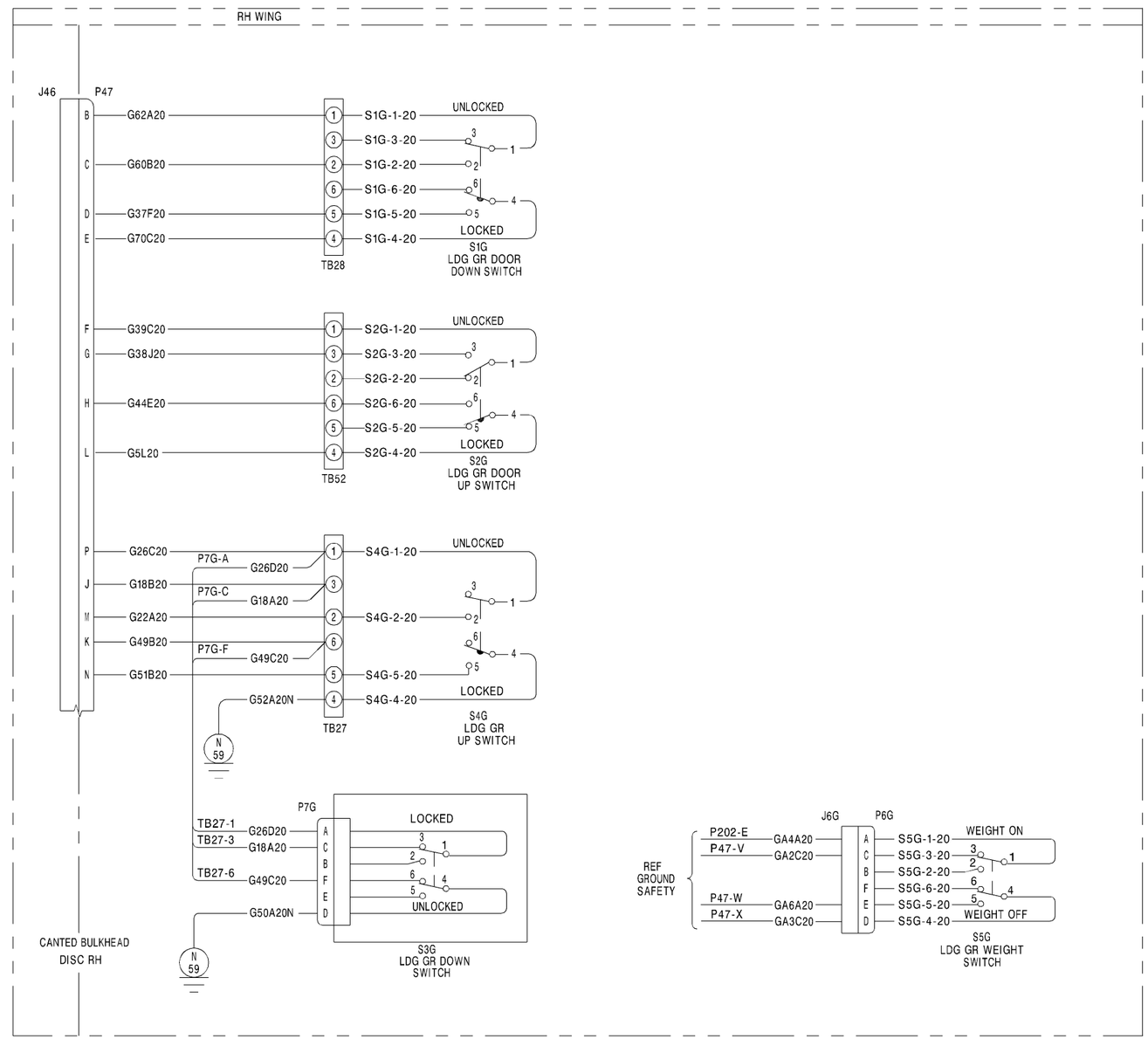

Landing Gear Control Warning and Indication – Wiring (Sheet 5 of 5) Figure 2-8

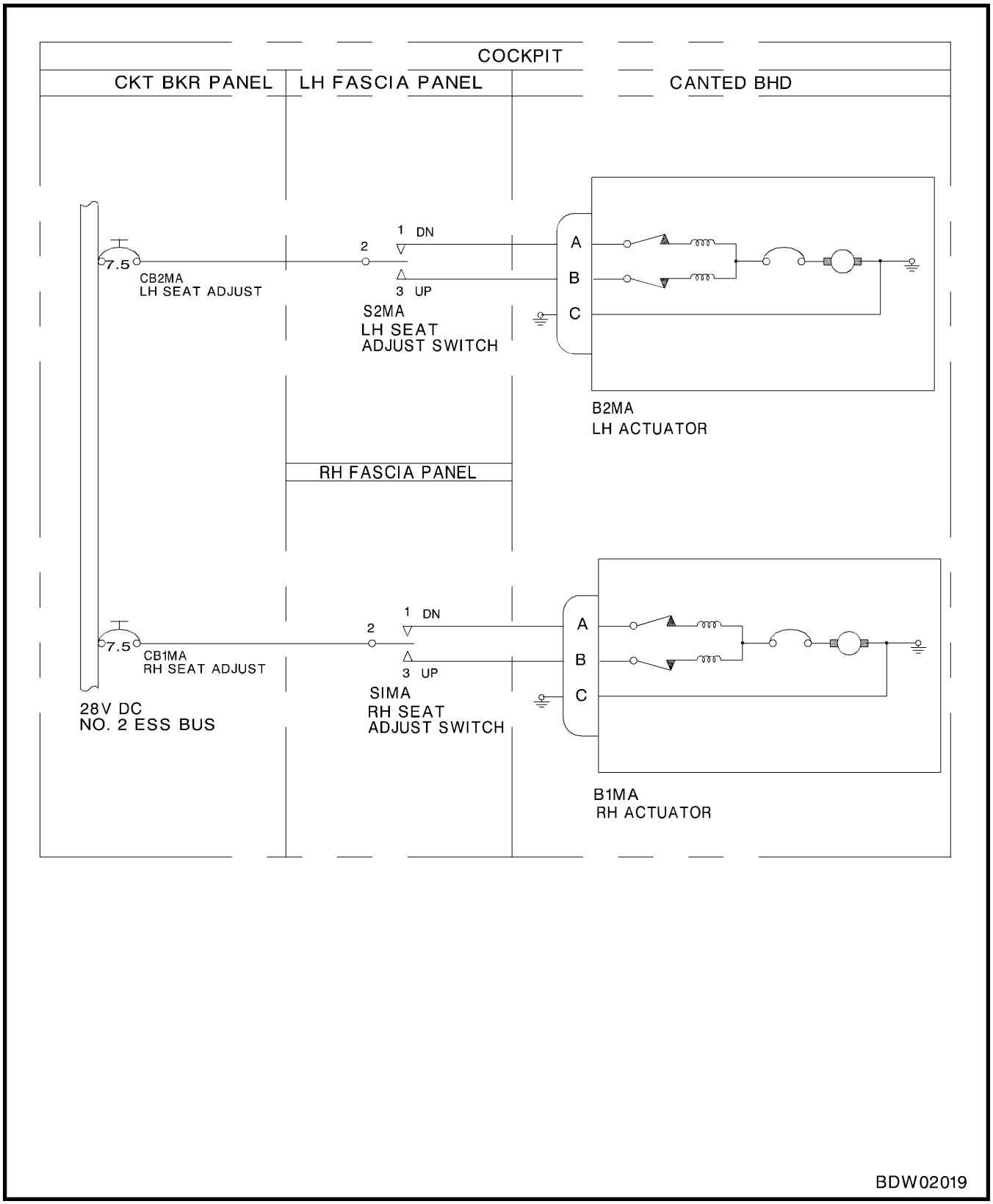

Figure 2-9 Seat Adjust – Schematic

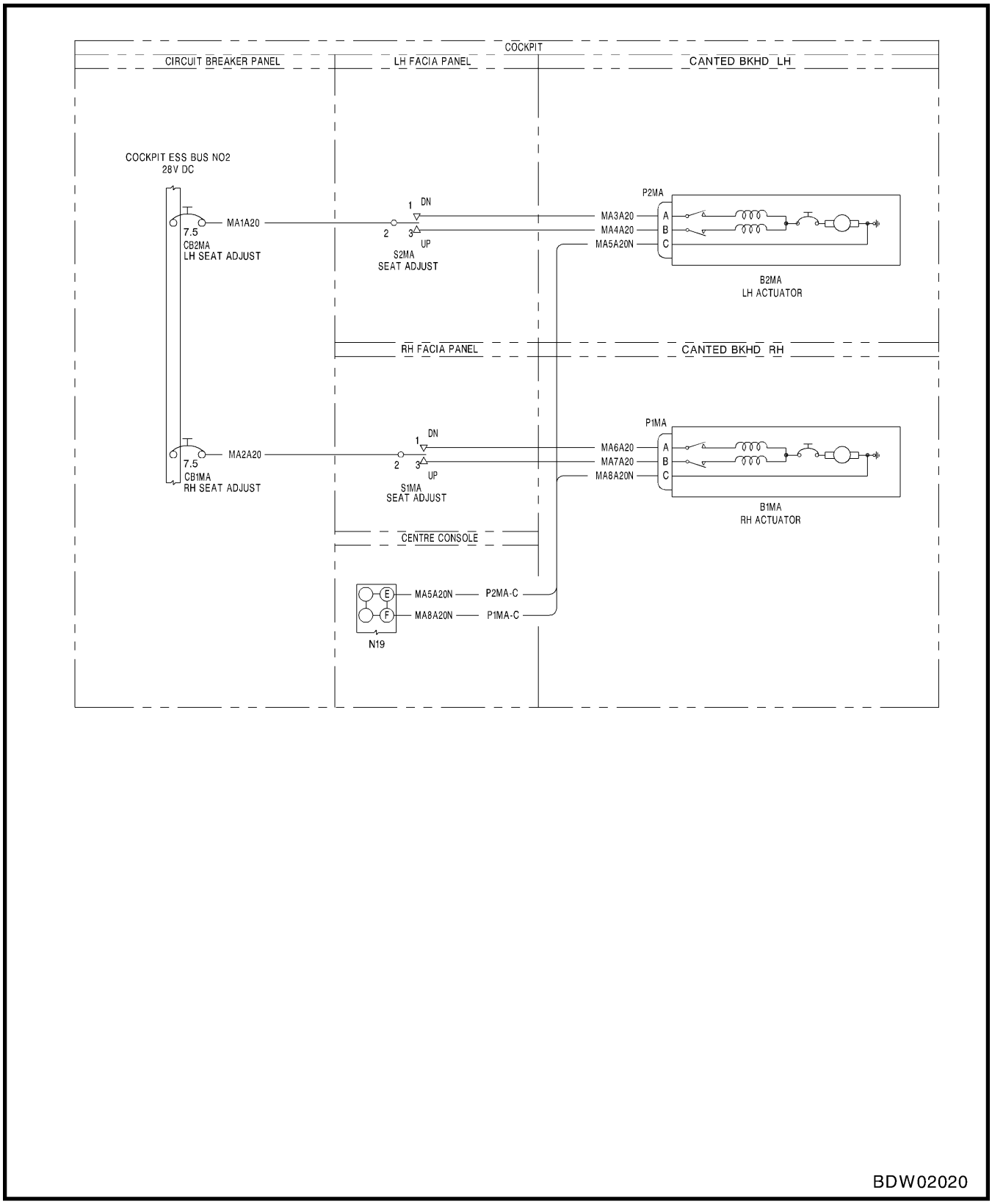

Figure 2-10 Seat Adjust – Wiring

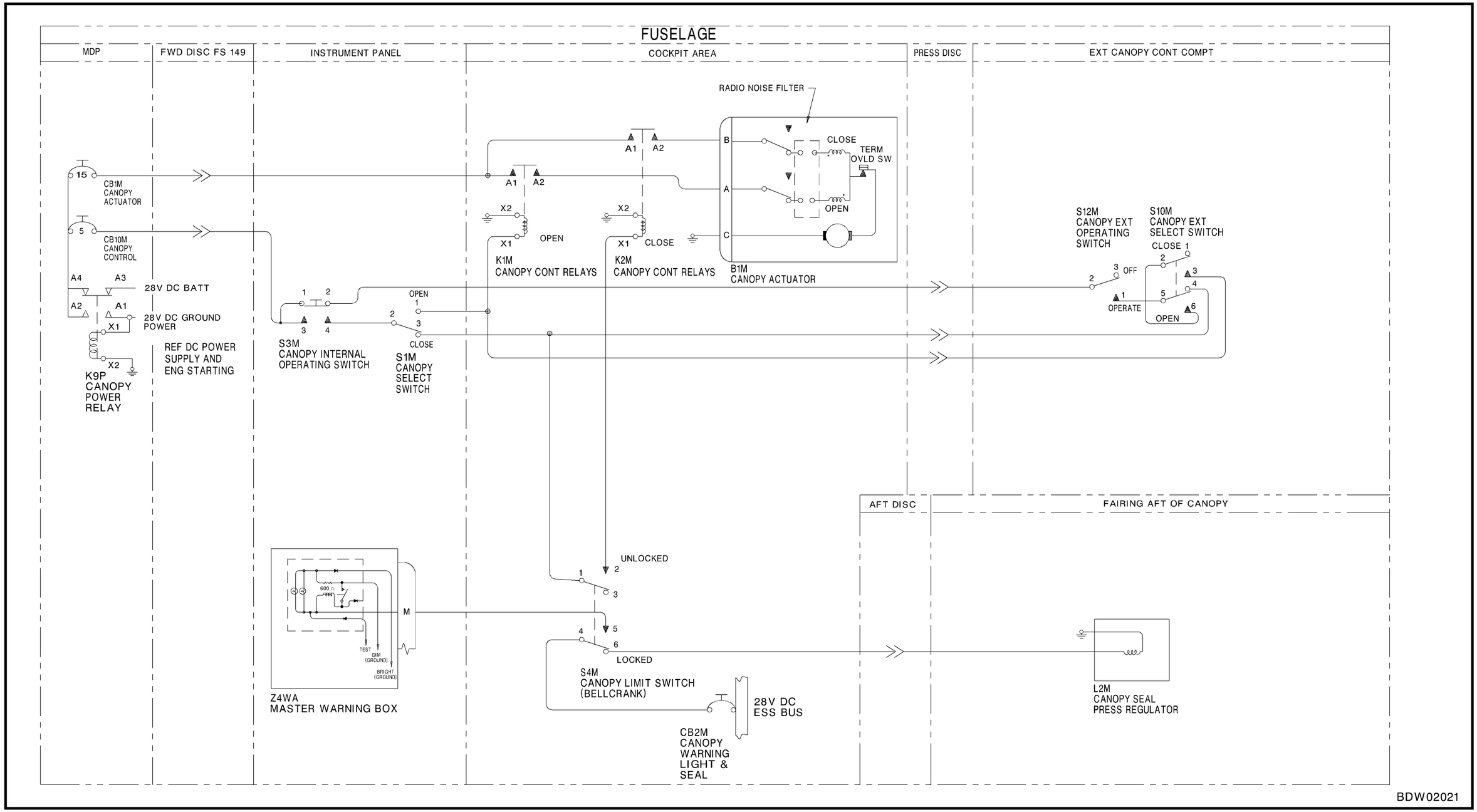

Canopy Control – Schematic Figure 2-11

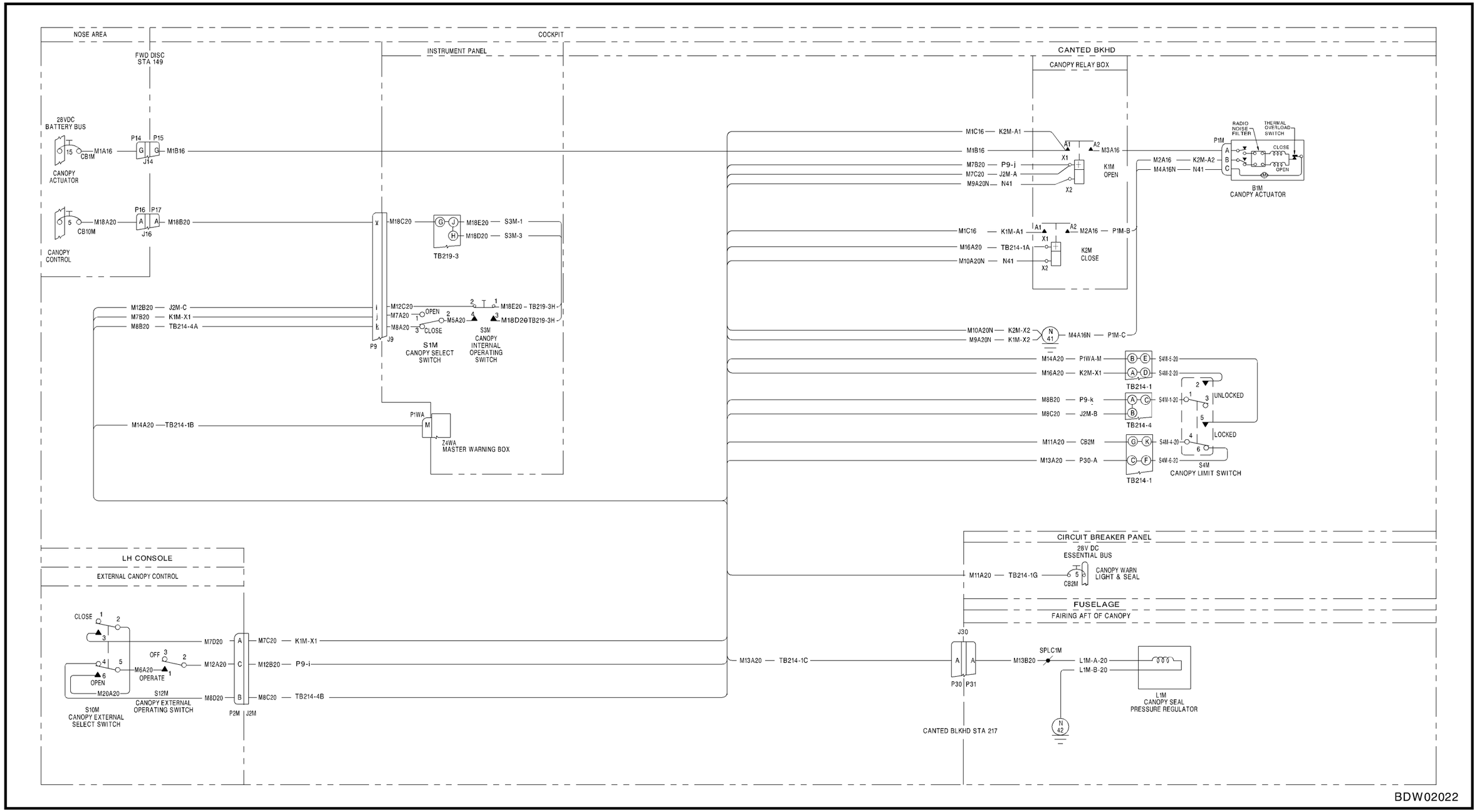

Canopy Control – Wiring Figure 2-12

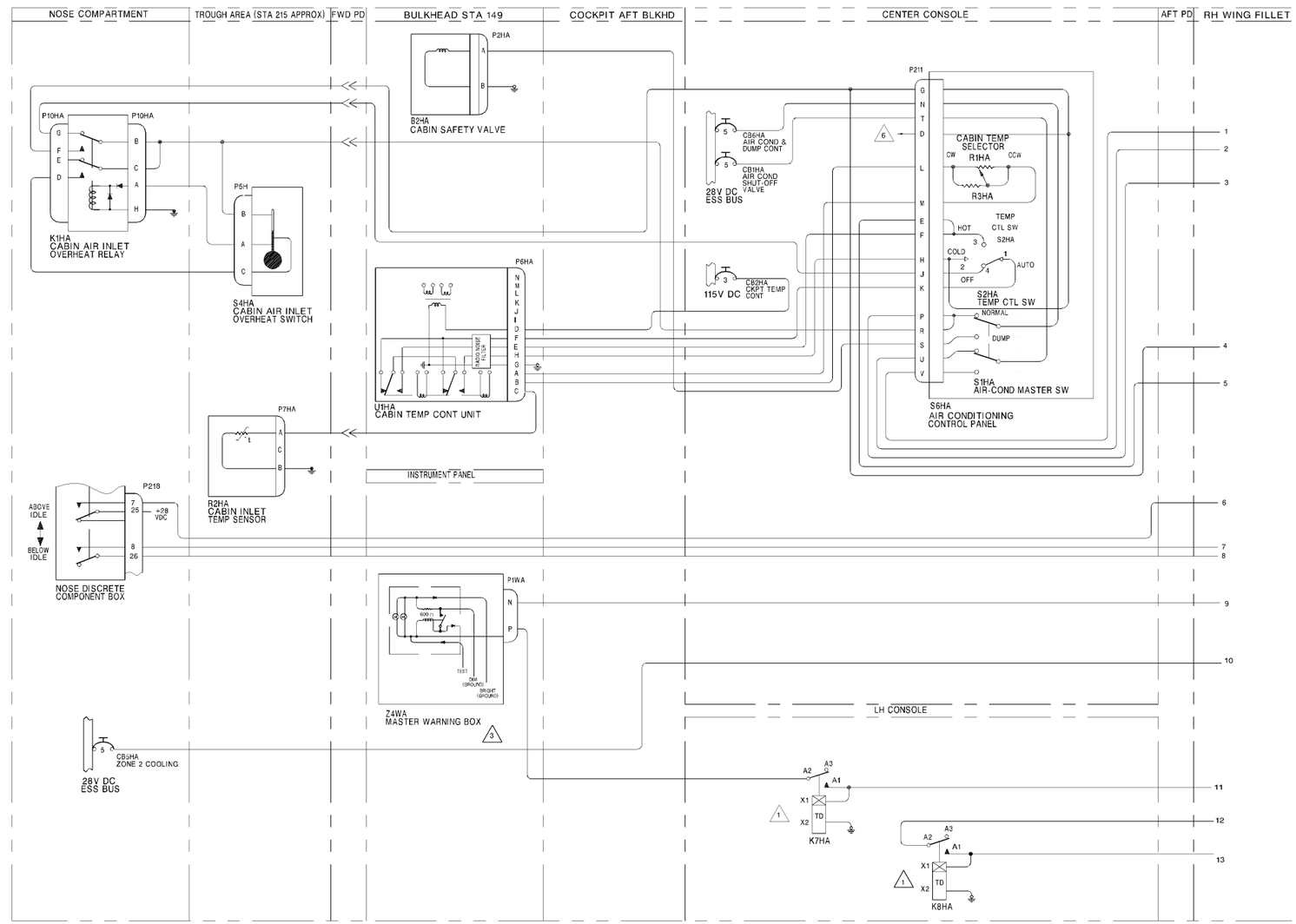

1. TIME DELAY RELAY (DELAY ON OPERATE: 15 SEC ⅓ SEC).
2. LOCATED IN DISCRETE COMPONENT BOX A2 (FS 155).
3. FOR CONTINUATION REFER TO MASTER WARNING CONTROL SCHEMATIC.
4. PART OF TRANSDUCER PIGTAIL HARNESS ASSY.
5. FOR CONTINUATION REFER TO GROUND SAFETY SCHEMATIC.
6. FOR CONTINUATION, REFER TO INTERIOR AND EXTERIOR LIGHTING SYSTEM SCHEMATIC.

BDW02023

Air Conditioning – Schematic (Sheet 1 of 3) Figure 2-13

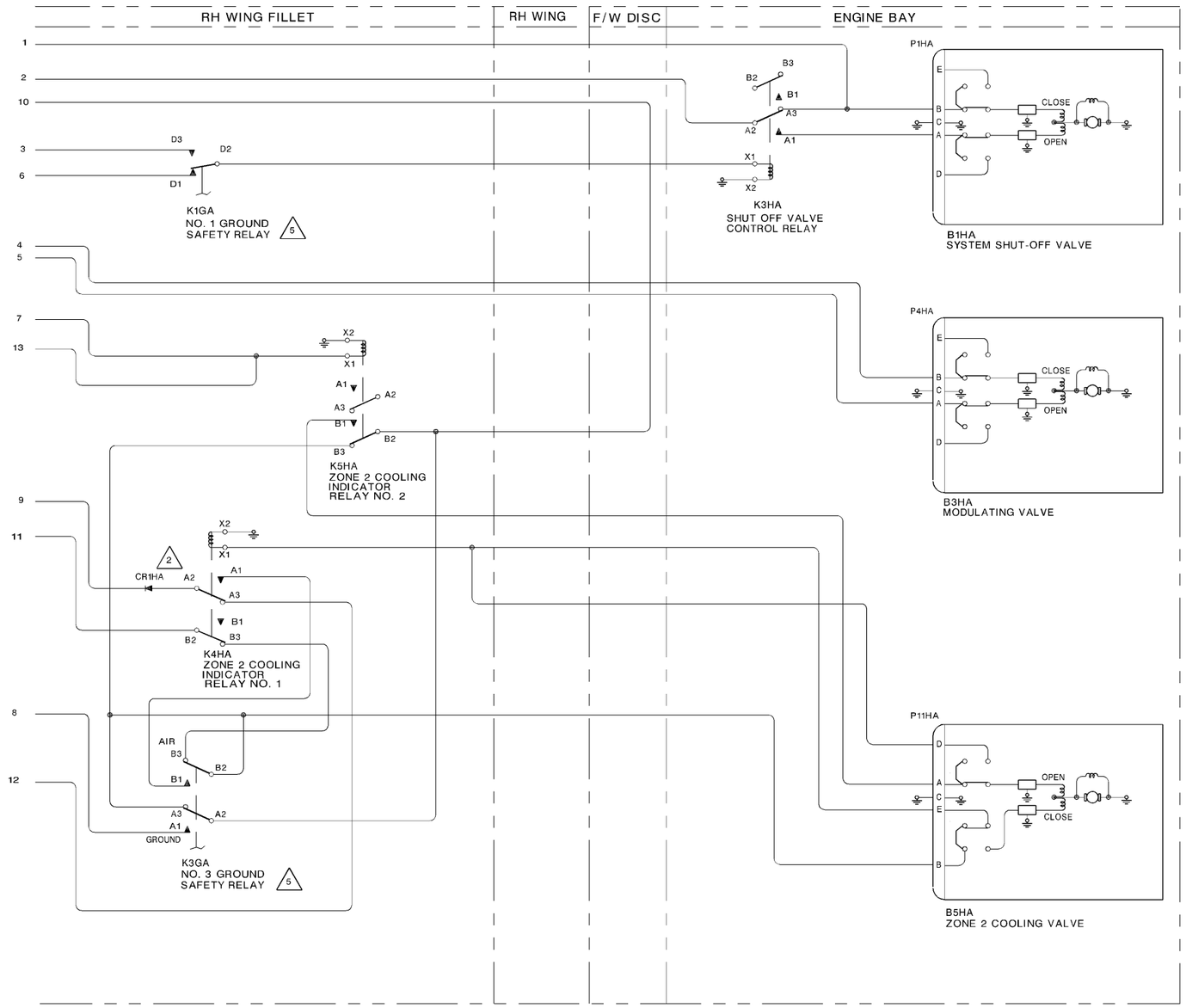

Air Conditioning – Schematic (Sheet 2 of 3) Figure 2-13

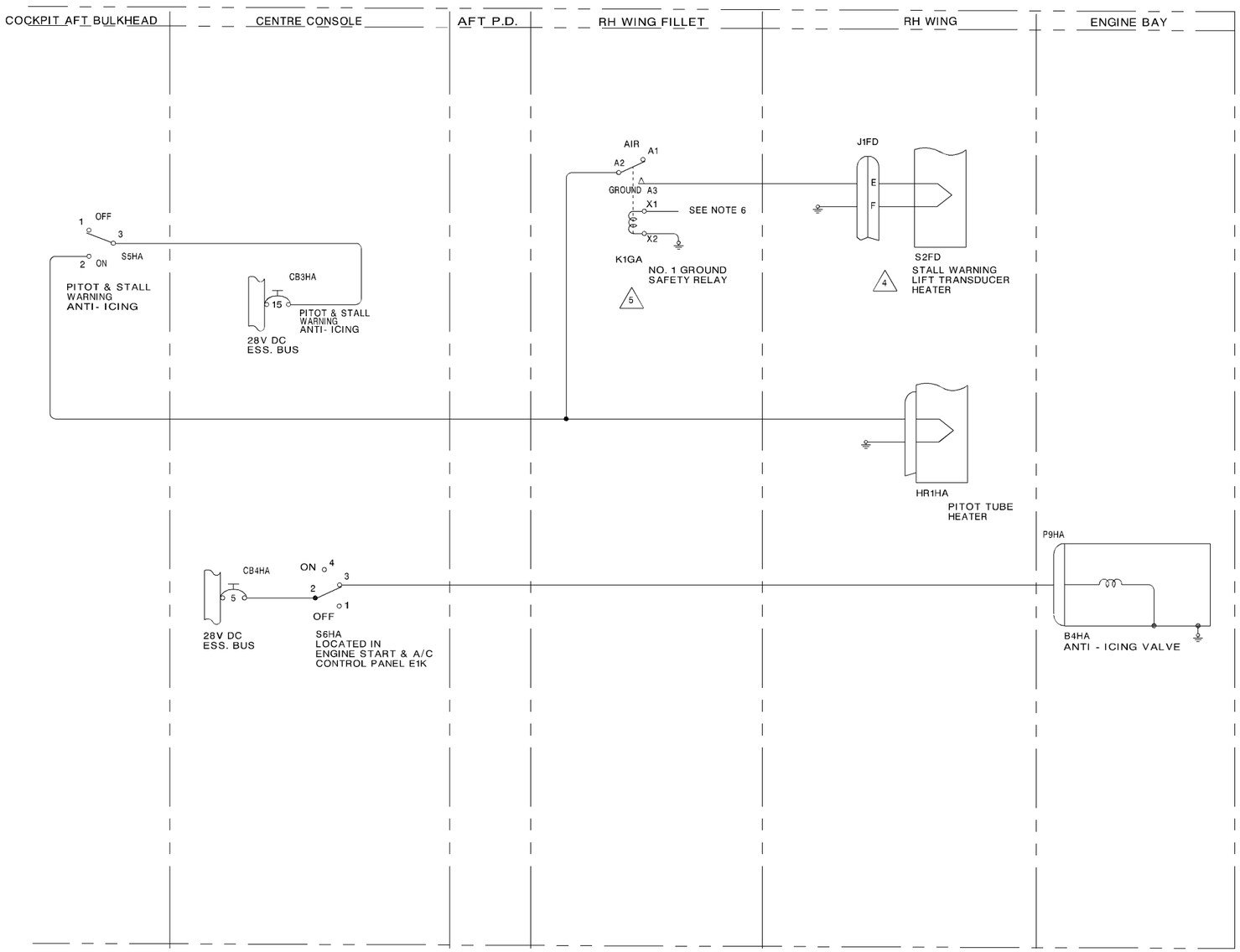

BDW02025

Air Conditioning – Schematic (Sheet 3 of 3) Figure 2-13

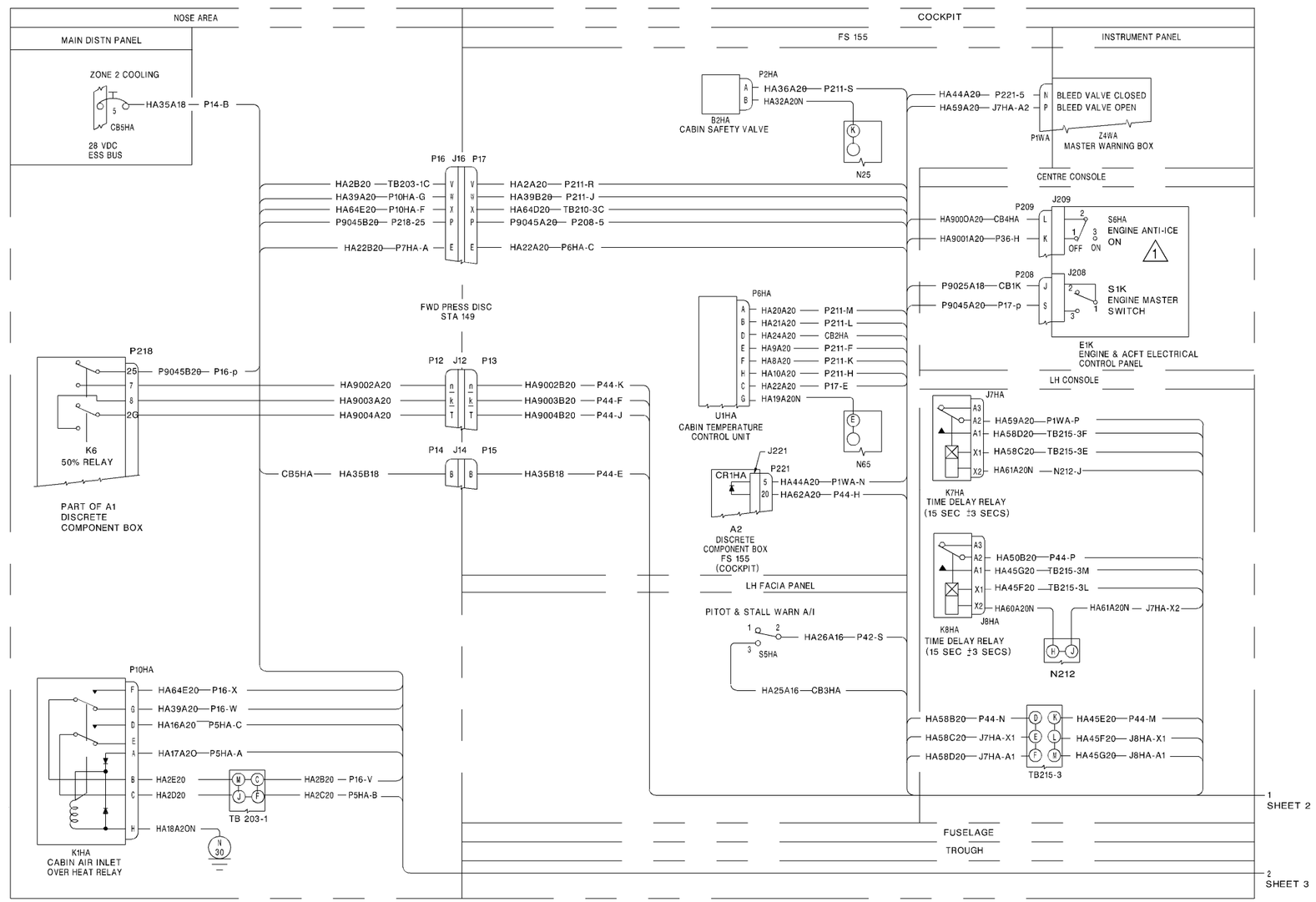

1 SWITCH S6HA IS NORMALLY CLOSED.

Air Conditioning – Wiring (Sheet 1 of 3) Figure 2-14

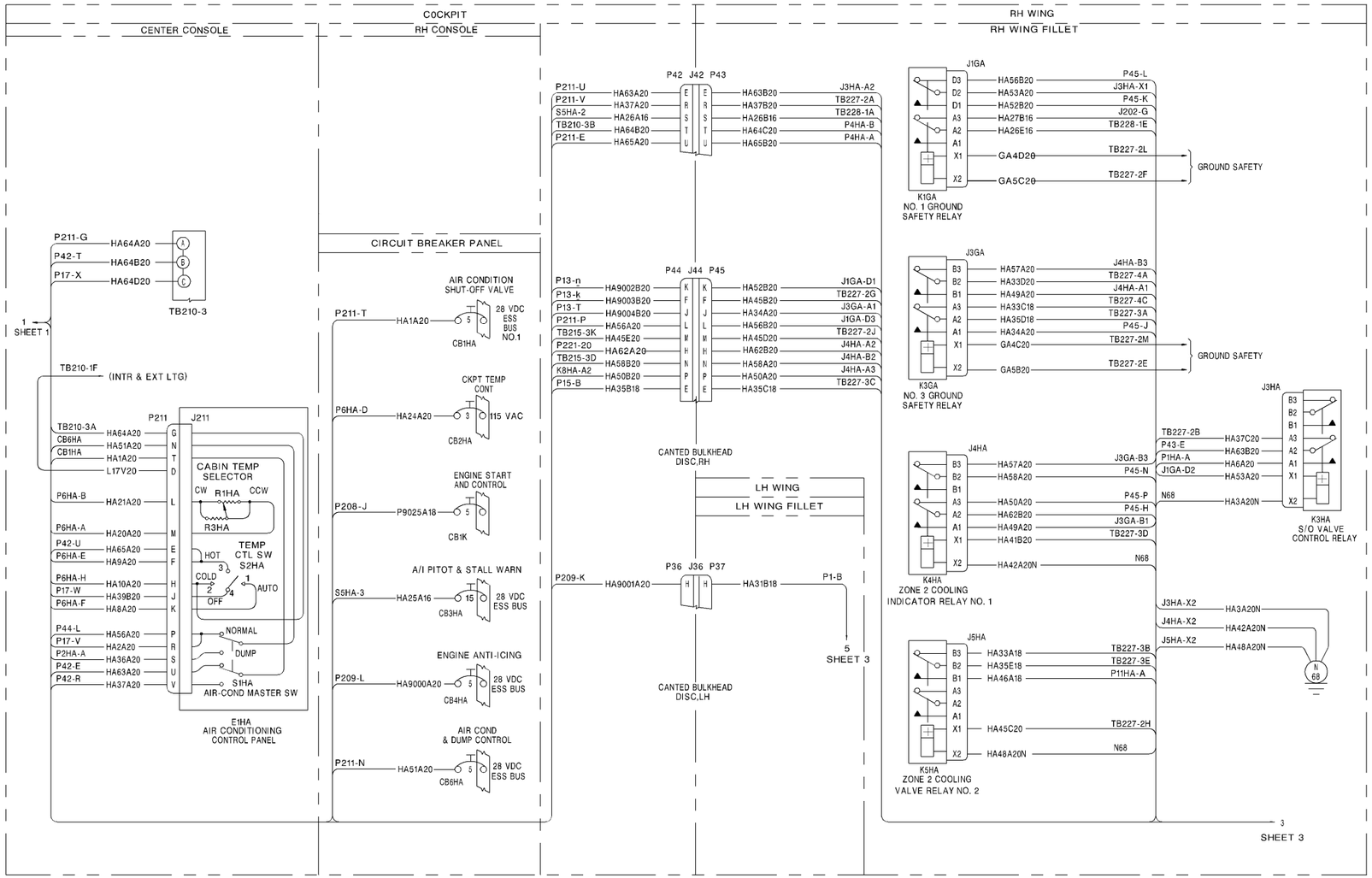

BDW02027

Air Conditioning – Wiring (Sheet 2 of 3) Figure 2-14

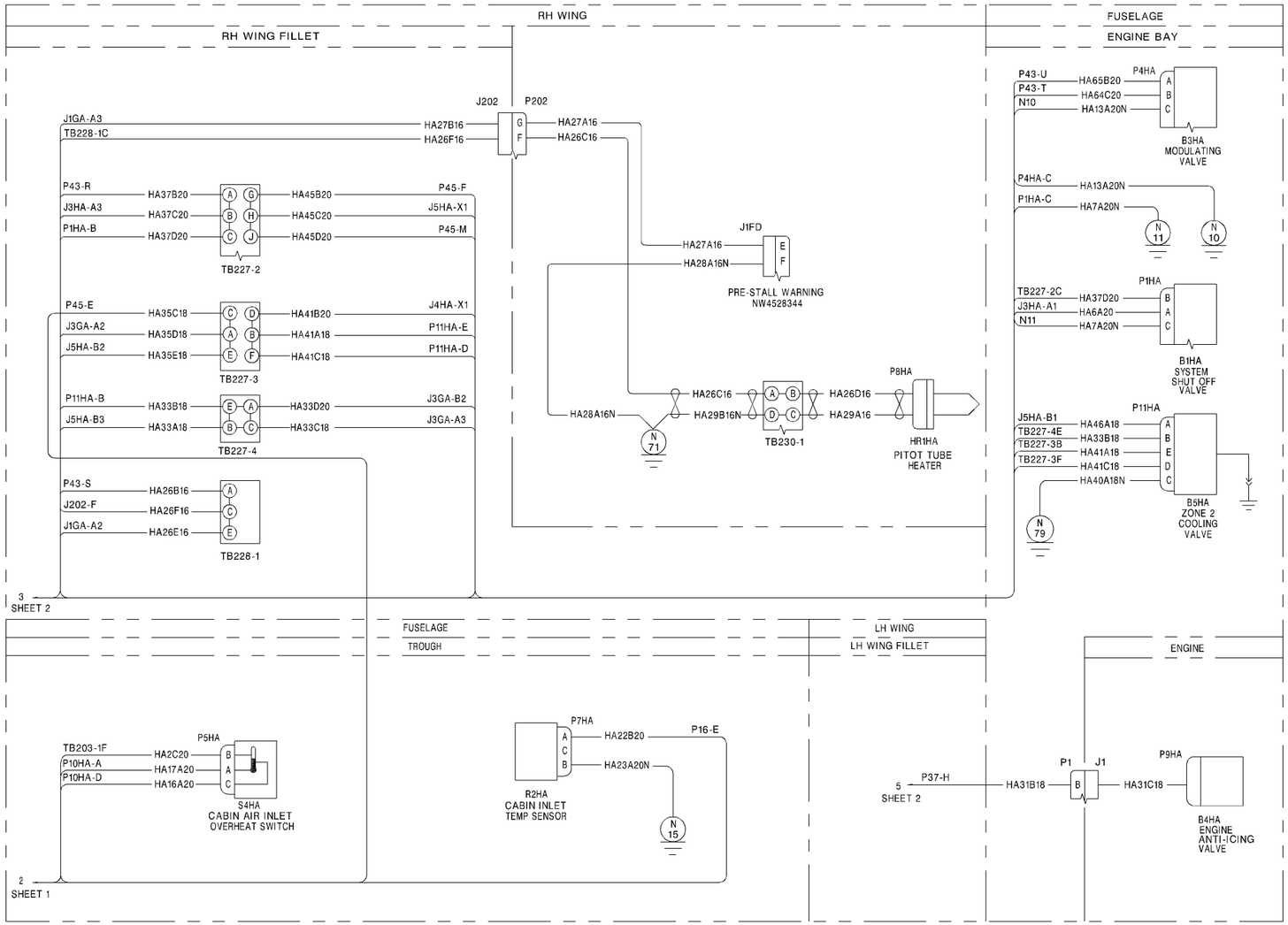

Air Conditioning – Wiring (Sheet 3 of 3) Figure 2-14

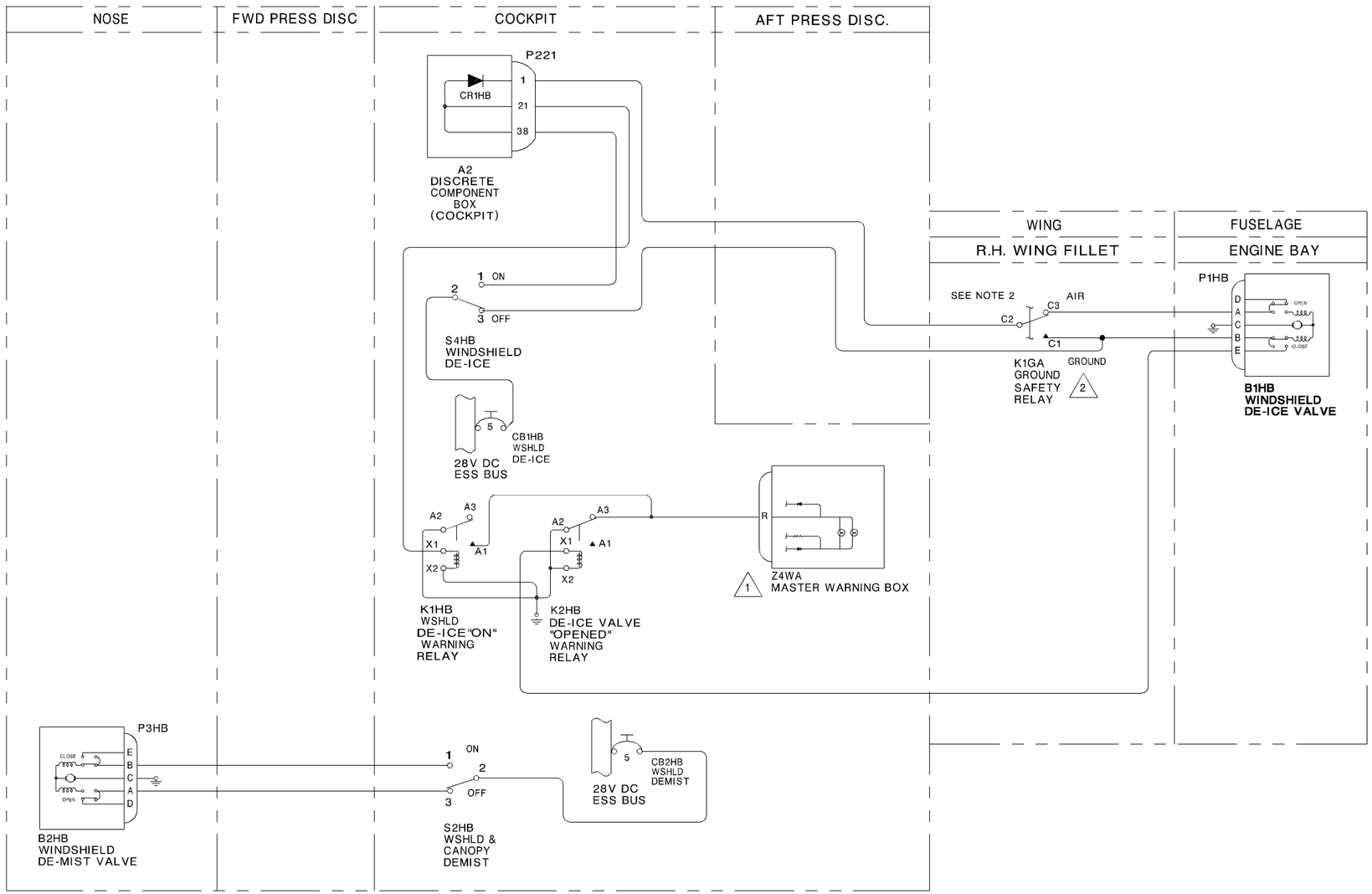

1. FOR DETAILS, REFER TO MASTER WARNING CONTROL SCHEMATIC.
2. FOR DETAILS, REFER TO GROUND SAFETY SCHEMATIC.
3. REFER TO WINDSHIELD DE-ICE/DE-MIST.

BDW02029

Windshield De-ice and Demisting – Schematic Figure 2-15

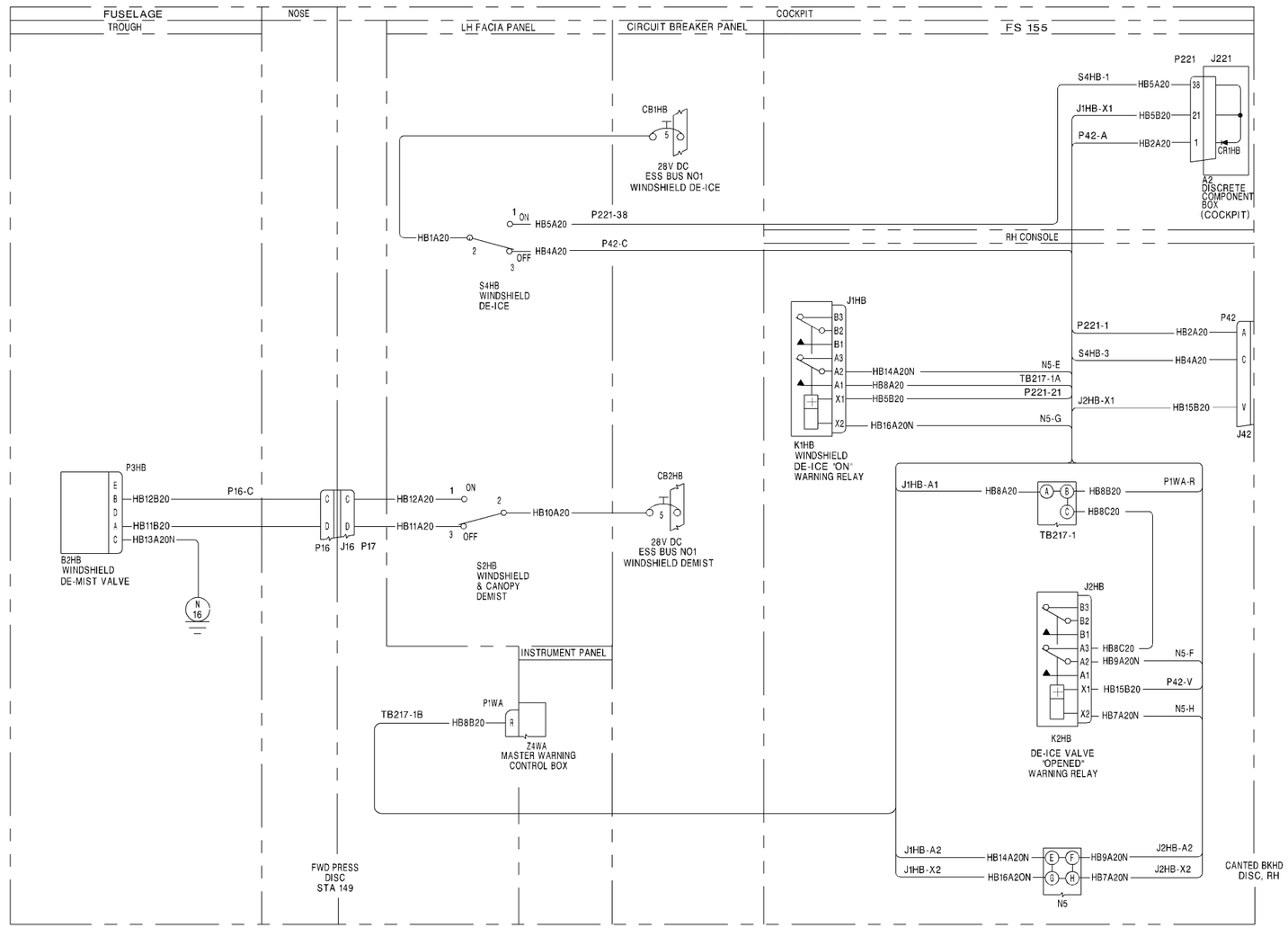

Windshield De-ice and Demisting – Wiring (Sheet 1 of 2) Figure 2-16

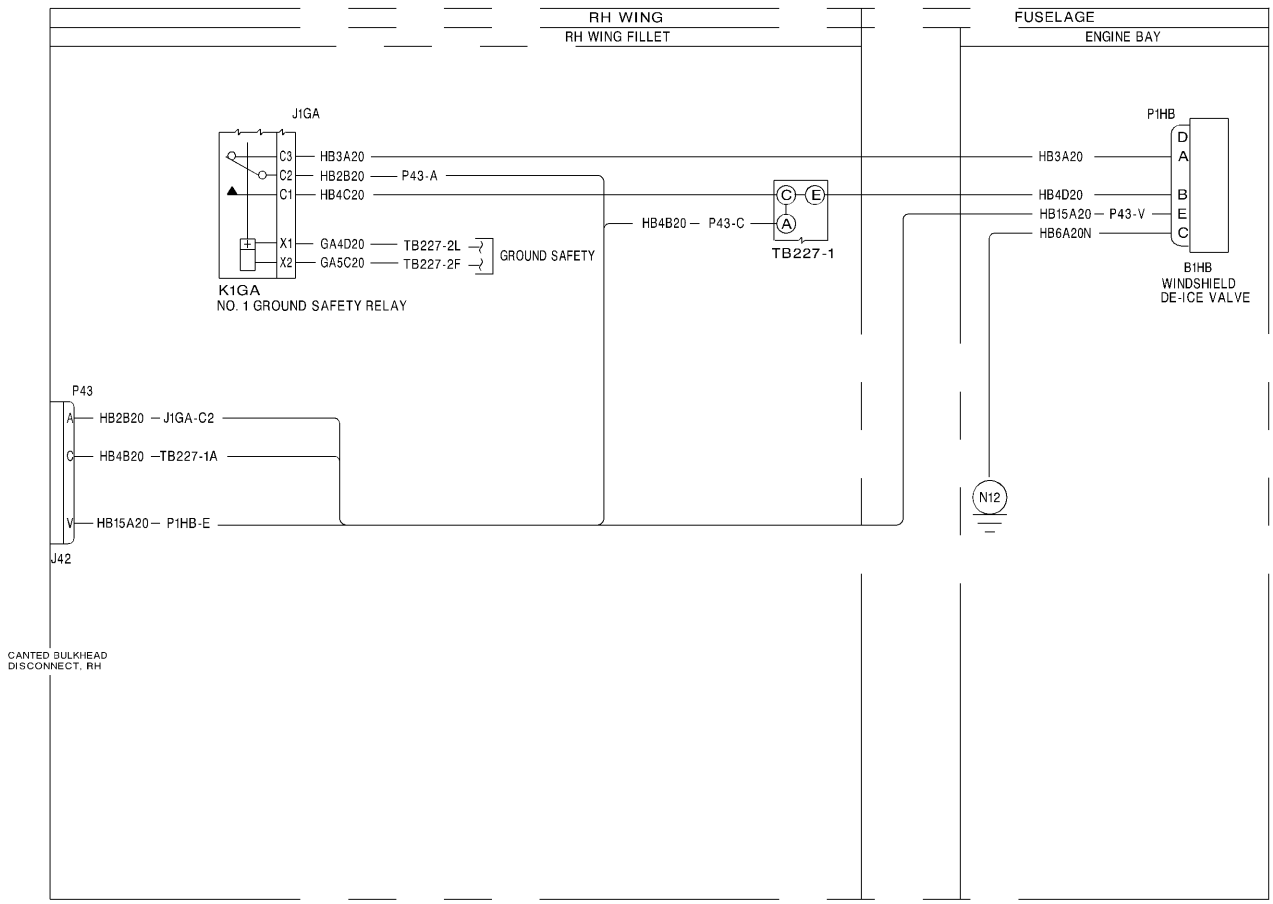

BDW02031

Figure 2-16 (Sheet 2 of 2) Windshield De-ice and Demisting – Wiring

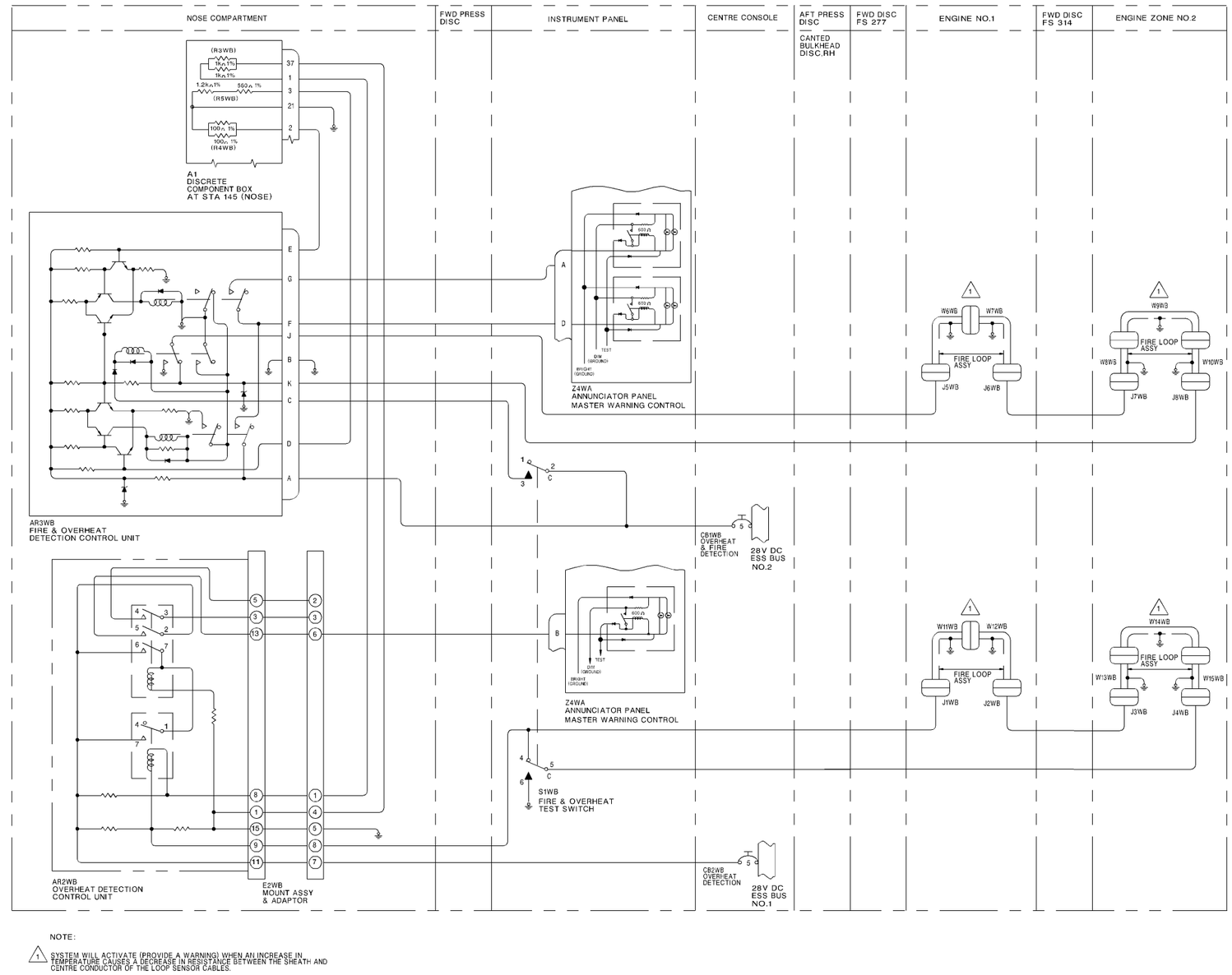

NOTE:

1. SYSTEM WILL ACTIVATE (PROVIDE A WARNING) WHEN AN INCREASE IN TEMPERATURE CAUSES A DECREASE IN RESISTANCE BETWEEN THE SHEATH AND CENTRE CONDUCTOR OF THE LOOP SENSOR CABLES.

BDW02032

Fire and Overheat Detection – Schematic Figure 2-17

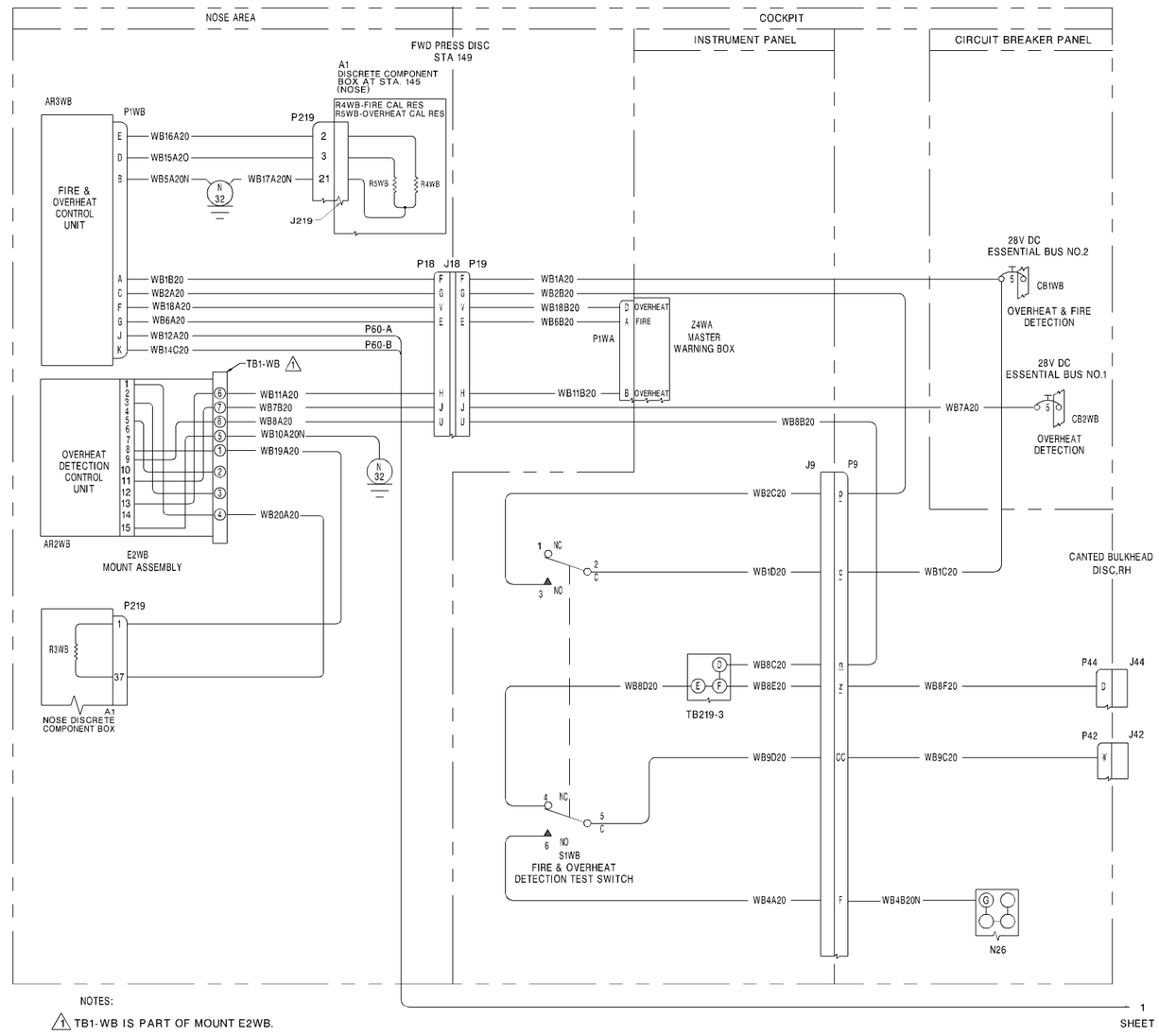

NOTES:

1. TB1-WB IS PART OF MOUNT E2WB.

BDW02033

Fire and Overheat Detection – Wiring (Sheet 1 of 2) Figure 2-18

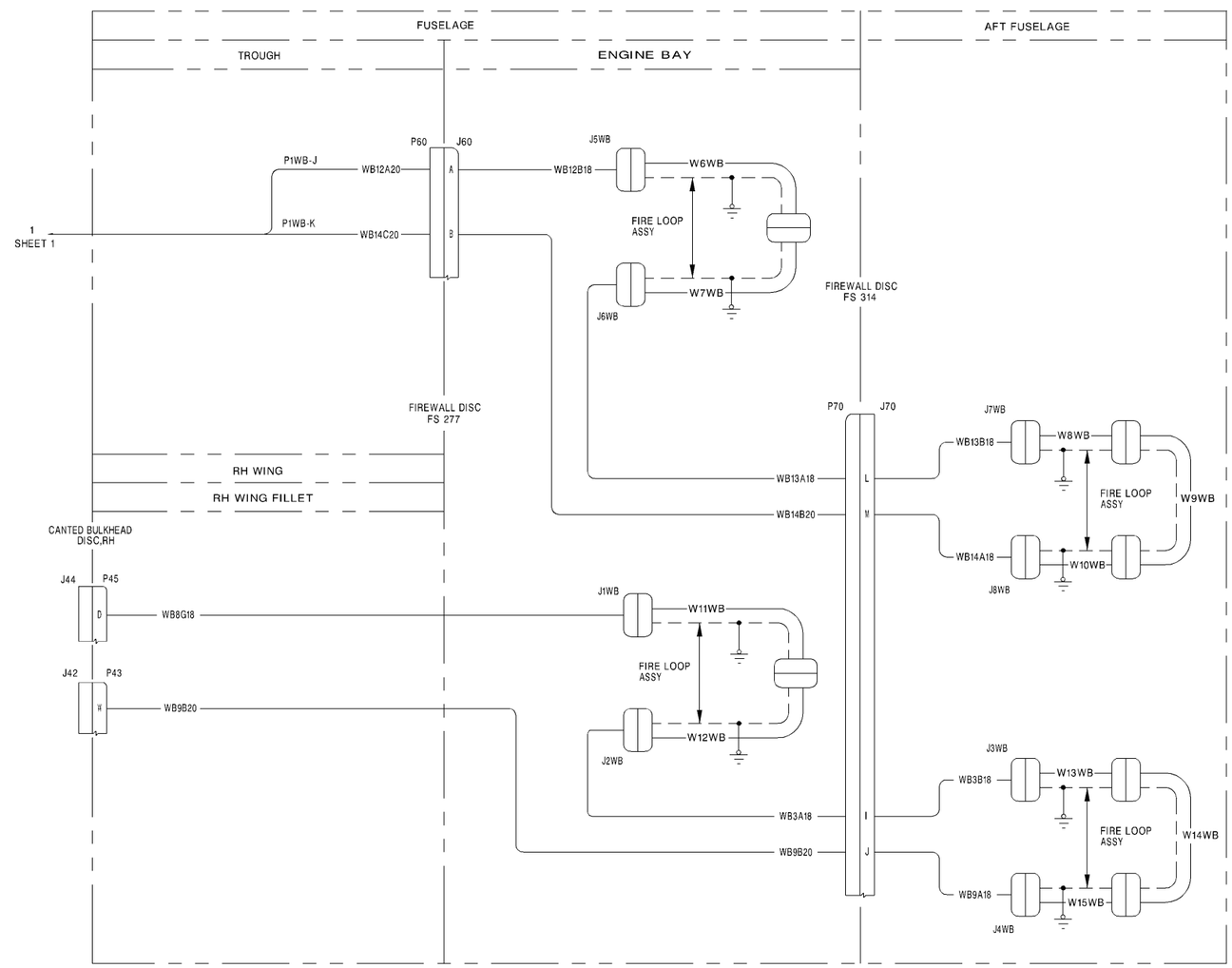

BDW02034

Fire and Overheat Detection – Wiring (Sheet 2 of 2) Figure 2-18

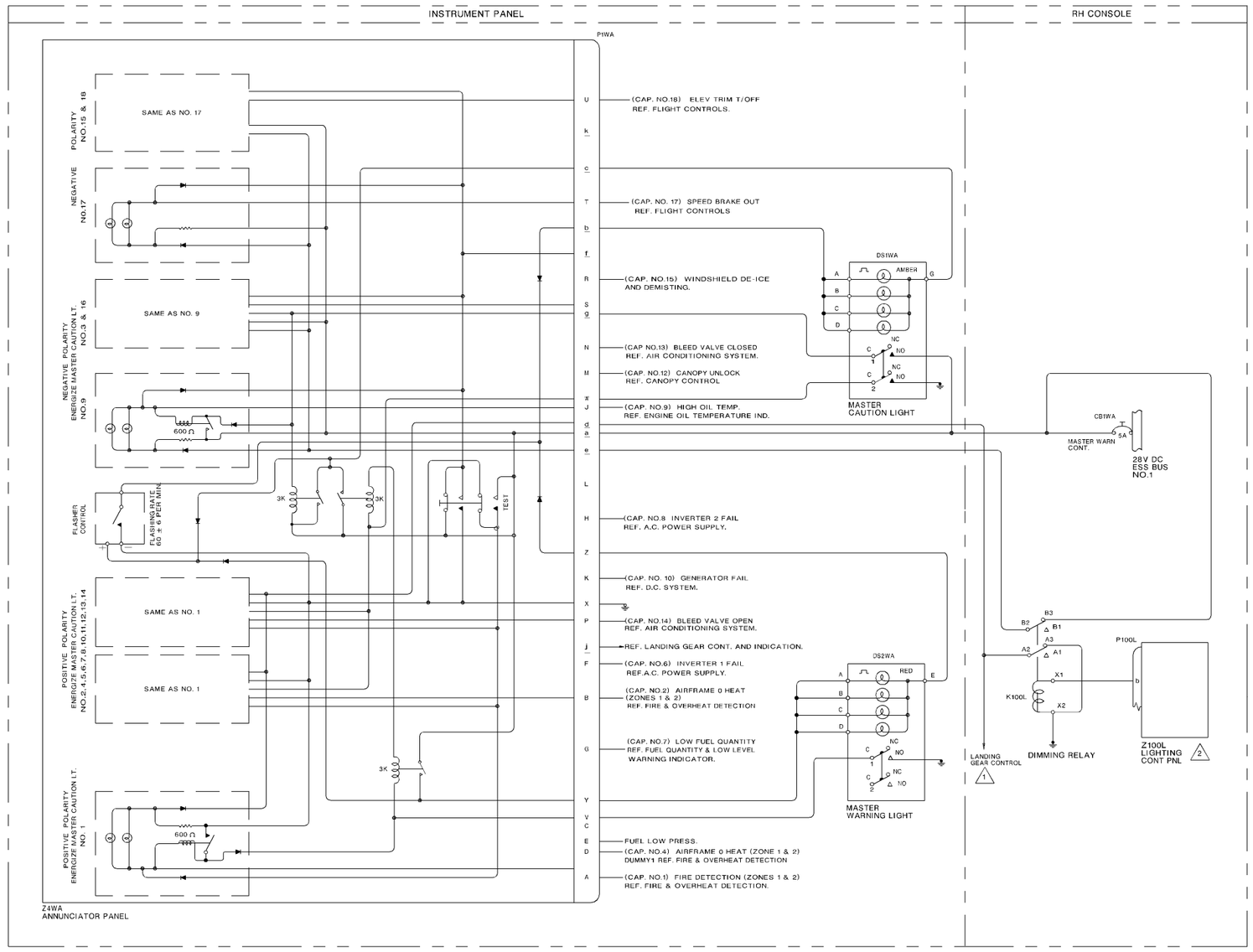

NOTES :

1. FOR CONTINUATION, REFER TO LG CONTROL-WARNING & IND SCHEMATIC.
2. FOR CONTINUATION, REFER TO INTERIOR AND EXTERIOR LIGHTING SYSTEM. - SCHEMATIC
3. REF WIRING DIAGRAM REFER TO MASTER WARNING CONTROL.

BDW02035

Master Warning Control – Schematic Figure 2-19

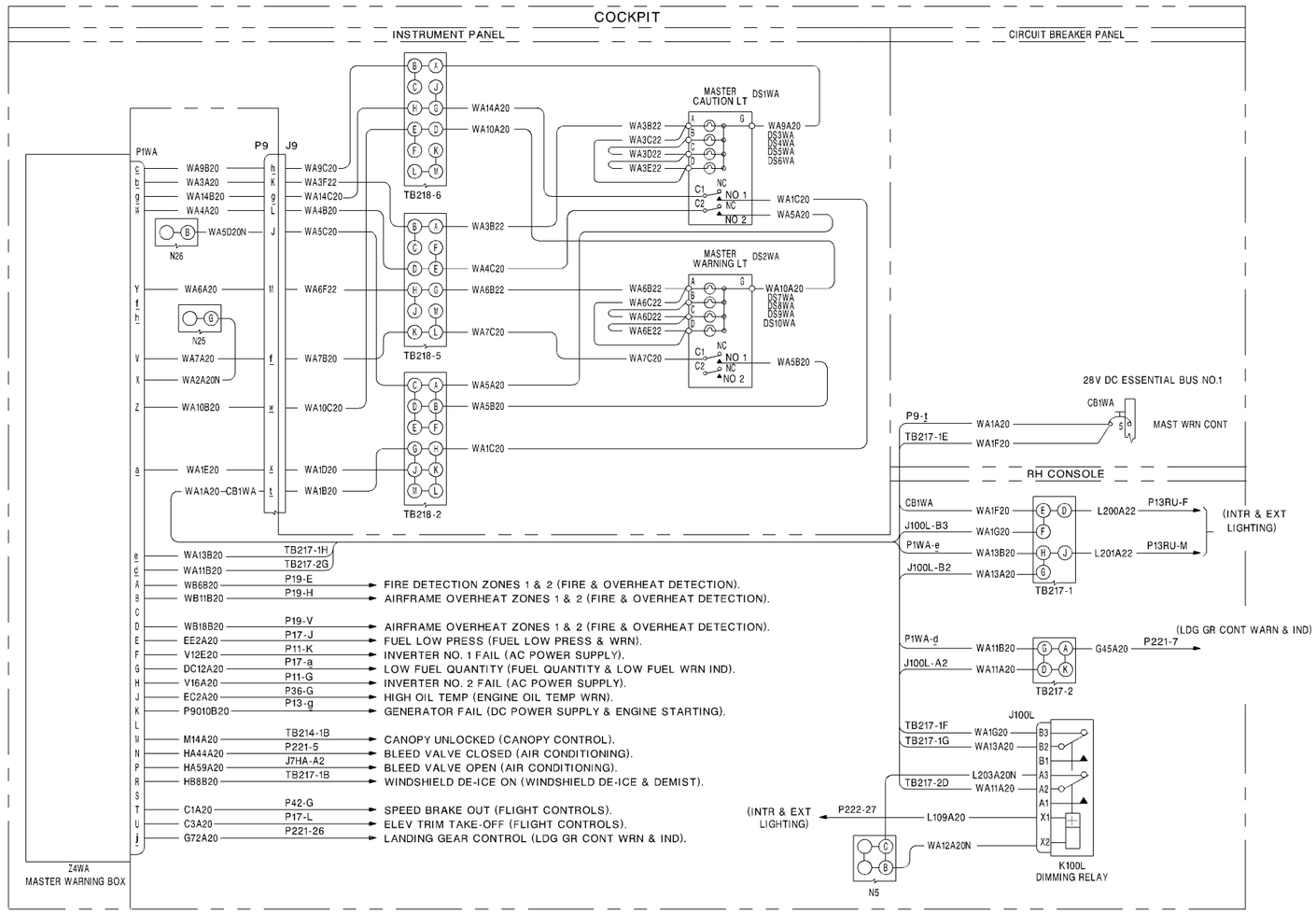

Master Warning Control – Wiring Figure 2-20

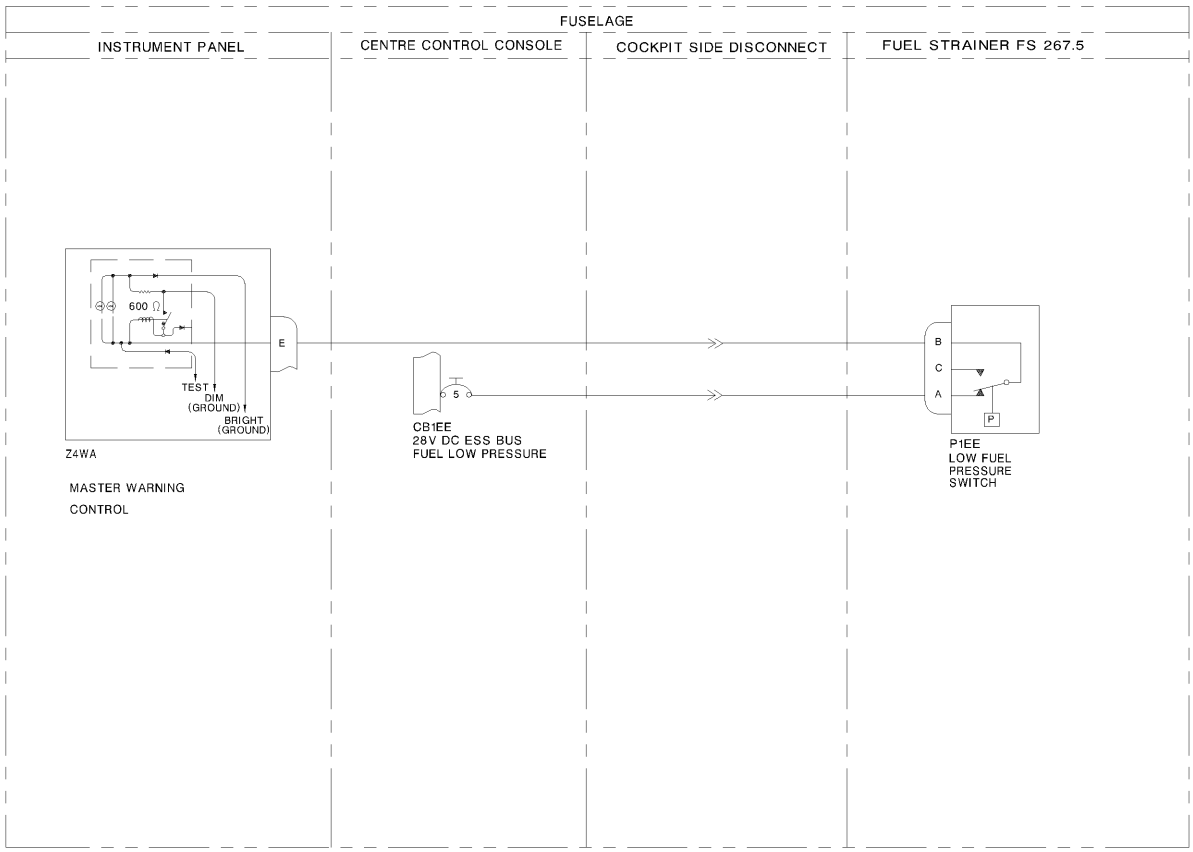

BDW02037

Figure 2-21 Fuel Low Pressure Warning System – Schematic

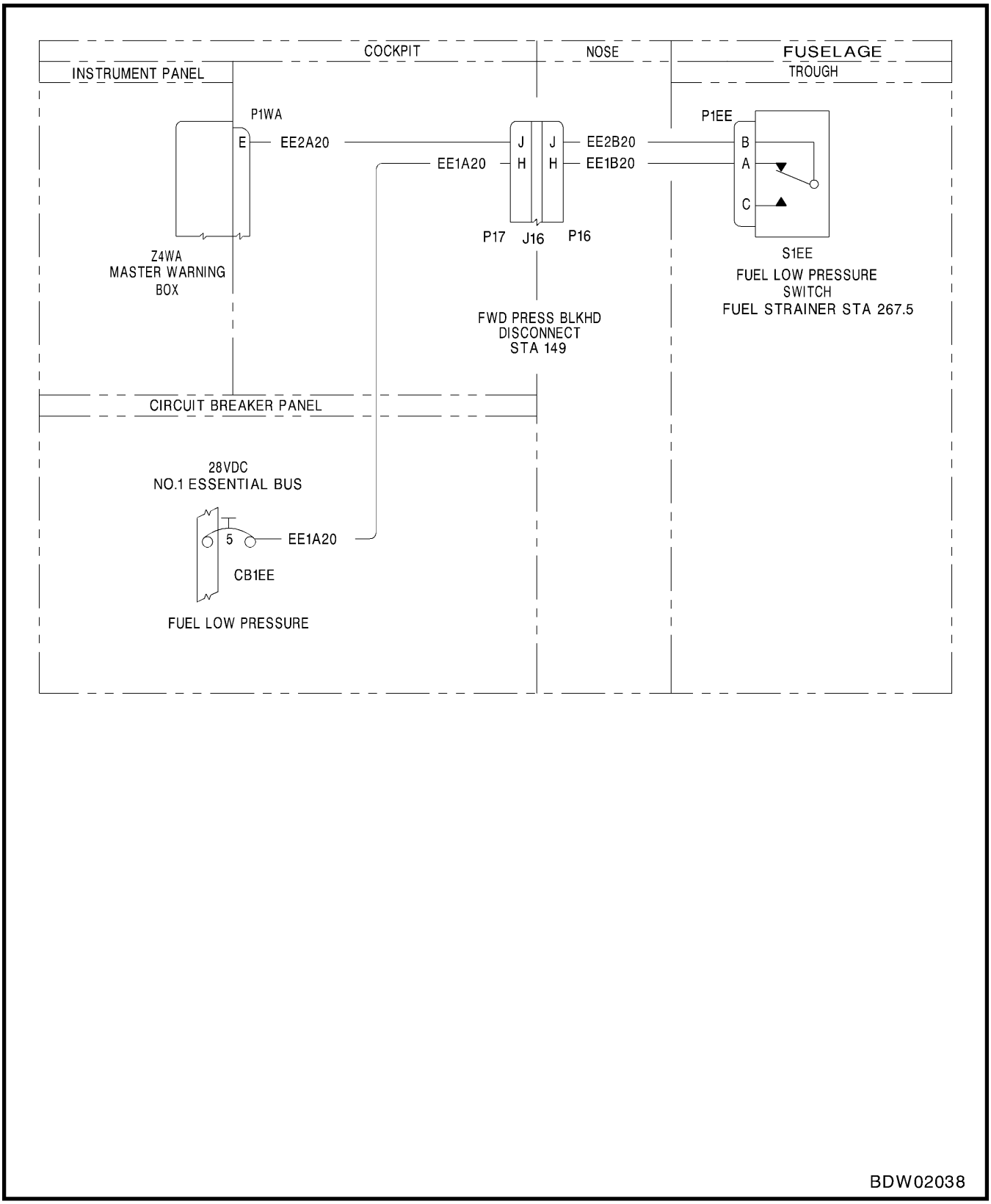

Figure 2-22 Fuel Low Pressure Warning System – Wiring

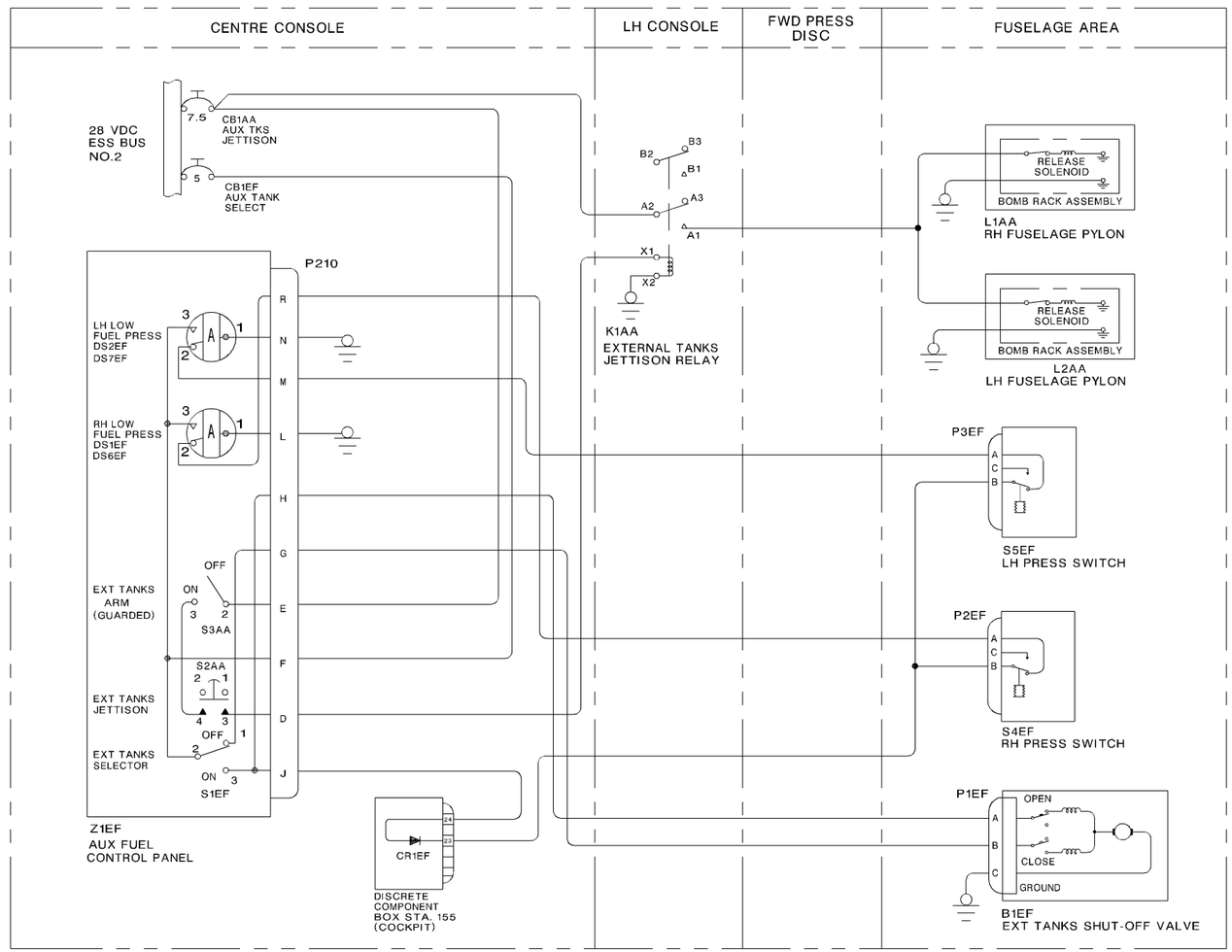

Auxiliary Fuel System – Schematic Figure 2-23

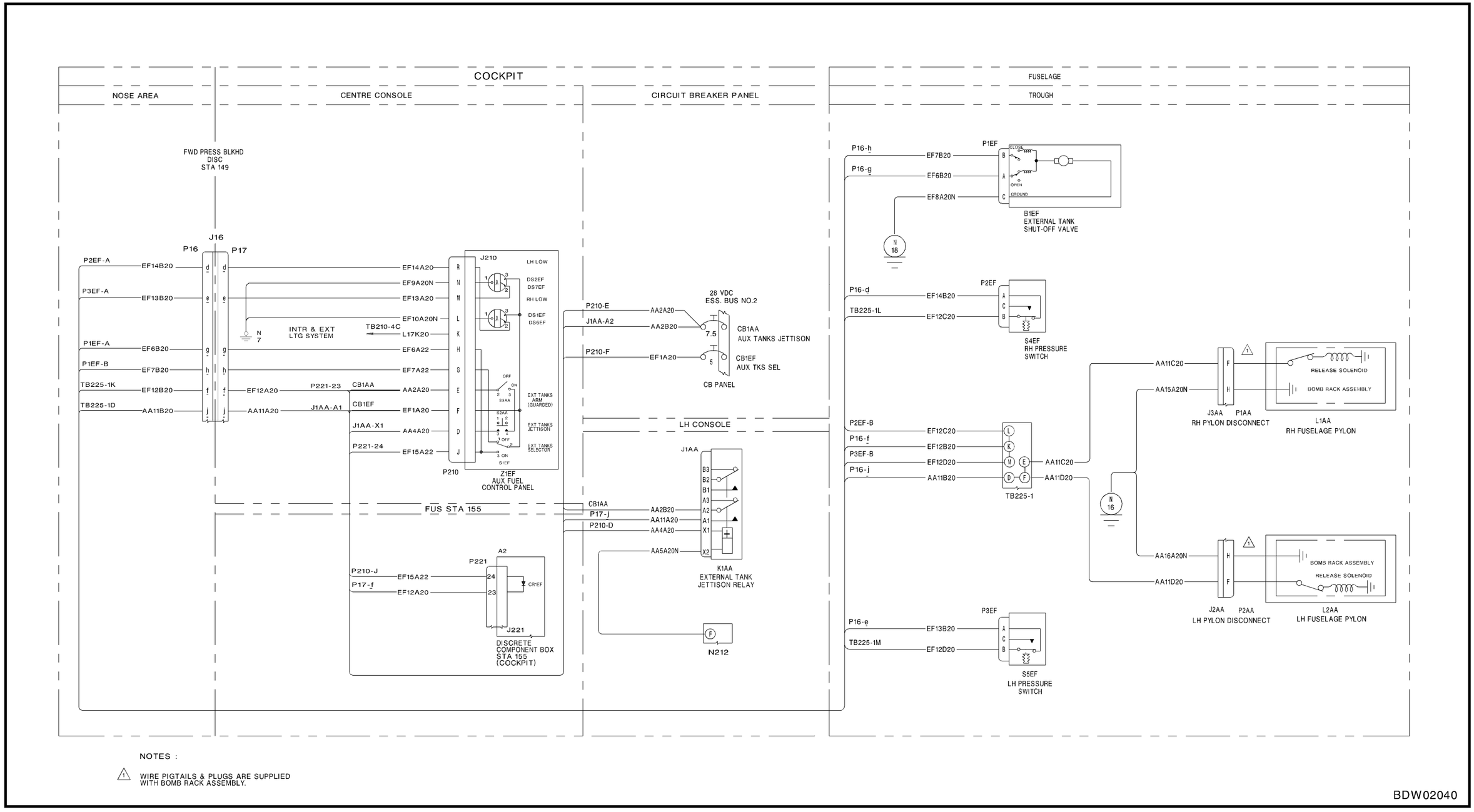

NOTES :

1. WIRE PIGTAILS & PLUGS ARE SUPPLIED WITH BOMB RACK ASSEMBLY.

Auxiliary Fuel System – Wiring Figure 2-24

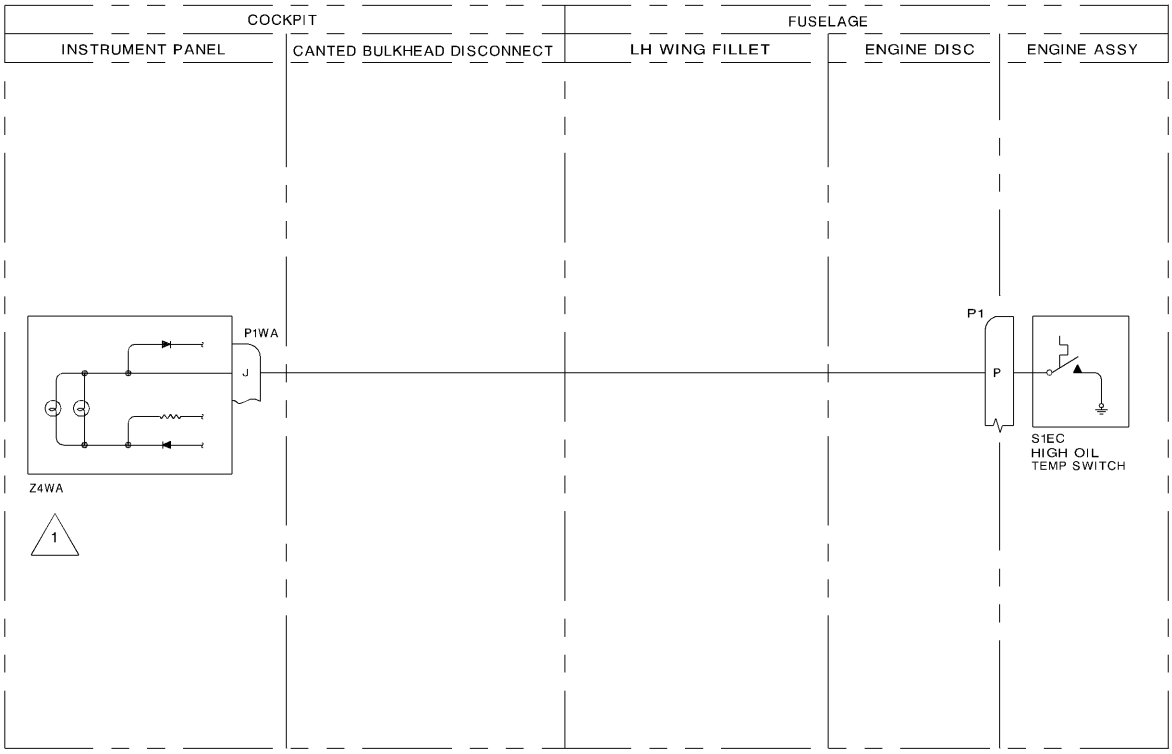

NOTE:

1 FOR CONTINUATION REFER TO MASTER WARNING CONTROL SCHEMATIC.

BDW02041

Figure 2-25 Engine Oil Temperature Warning System – Schematic

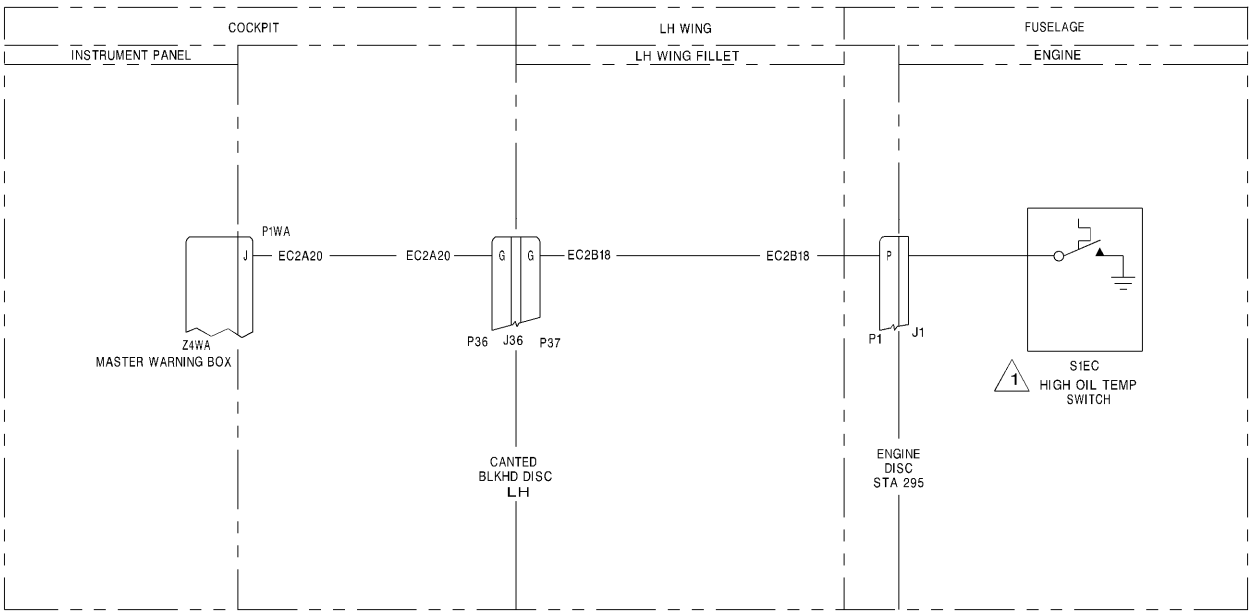

NOTE :

1 P/O ENGINE.

BDW02042

Figure 2-26 Engine Oil Temperature Warning System – Wiring

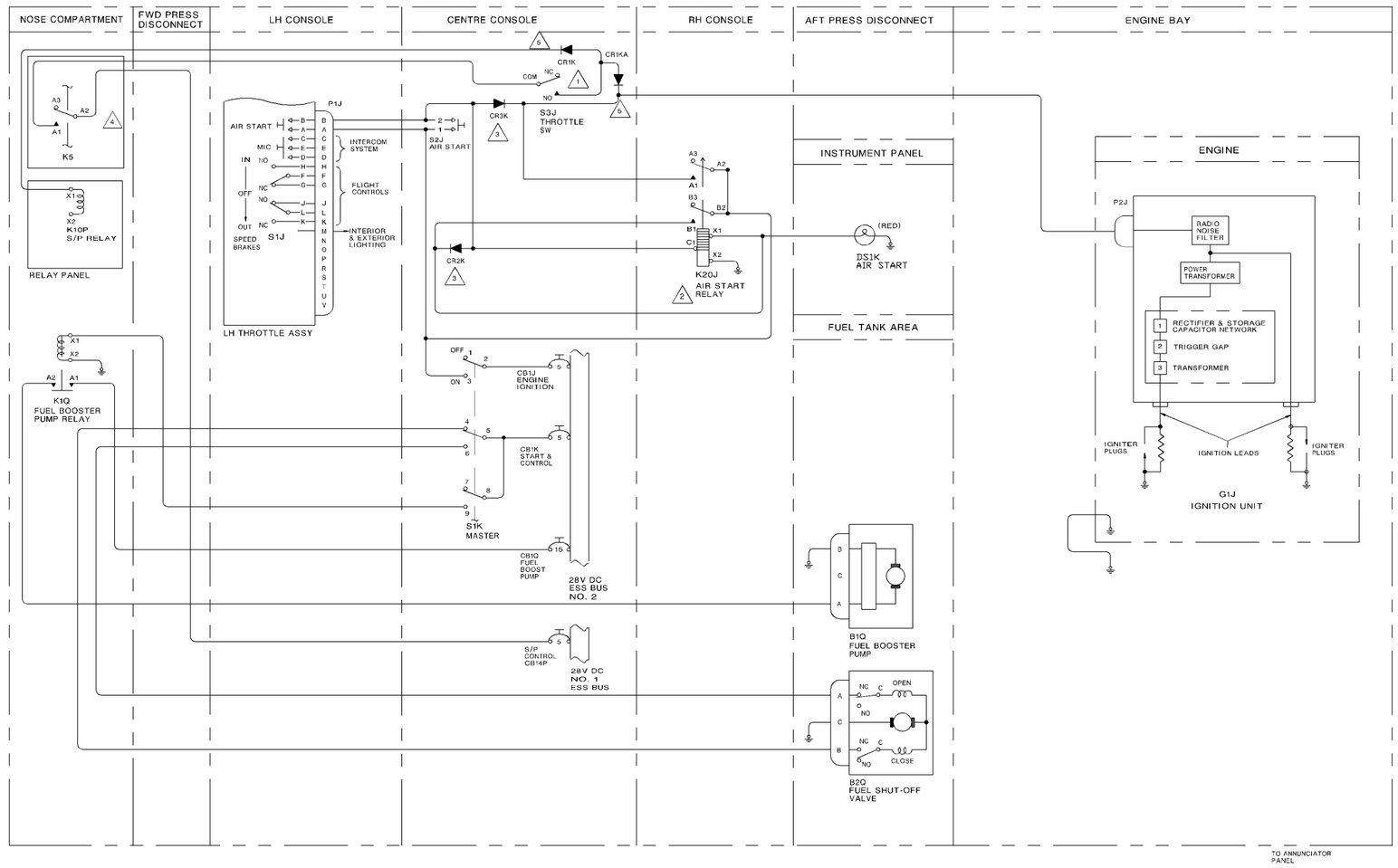

NOTES :

1. 'COM' - 'NO' MADE BETWEEN 3° AFT OF IDLE AND 6° FWD OF IDLE.
2. TIME DELAY RELAY (ON - RELEASE) - CONTACTS OPEN 25 SECONDS AFTER VOLTAGE IS REMOVED FROM CONTROL TERMINAL C1.
3. DIODES LOCATED IN COCKPIT DISCRETE COMPONENT BOX (A2) AT F.S. 155.
4. RELAY LOCATED IN NOSE DISCRETE COMPONENT BOX. REFER TO NOSE DISCRETE COMPONENT BOX.
5. DIODES LOCATED IN NOSE DISCRETE COMPONENT BOX (A1) AT F.S. 149.

BDW02043

Engine Control – Schematic Figure 2-27

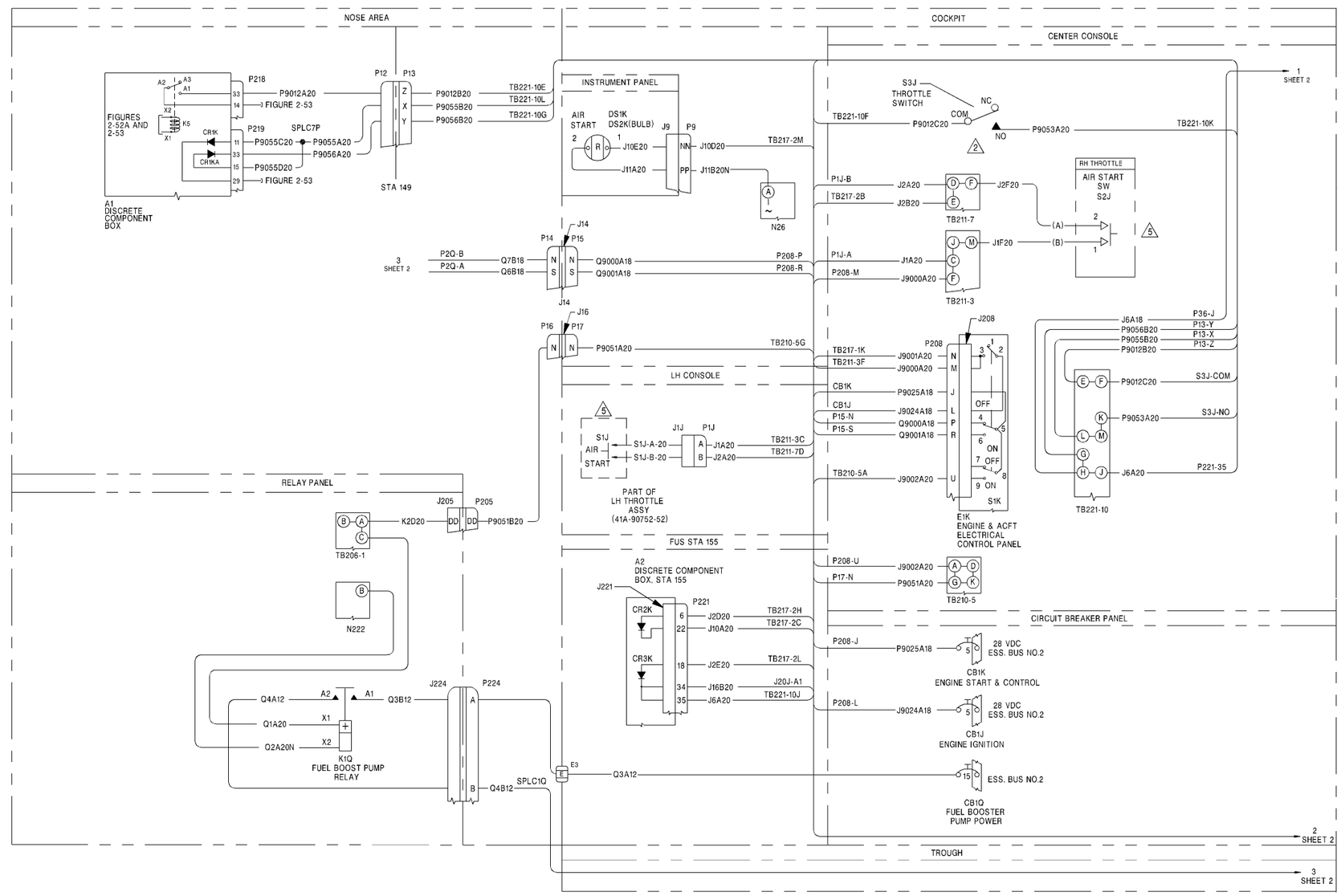

NOTES

1. P/O ENGINE
2. "COM-NO" MADE BETWEEN 3 INCHES AFT OF IDLE AND 6 INCHES FWD OF IDLE
3. 25 SEC DELAY ON OPENING OF RELAY
4. LOCATE SPLC1Q WITHIN 2 INCHES OF CONNECTOR P1Q
5. FOR THROTTLE ASSEMBLY REPLACEMENT, REFER TO THROTTLE ASSEMBLIES - WIRING

BDW02044

Engine Control – Wiring (Sheet 1 of 2) Figure 2-28

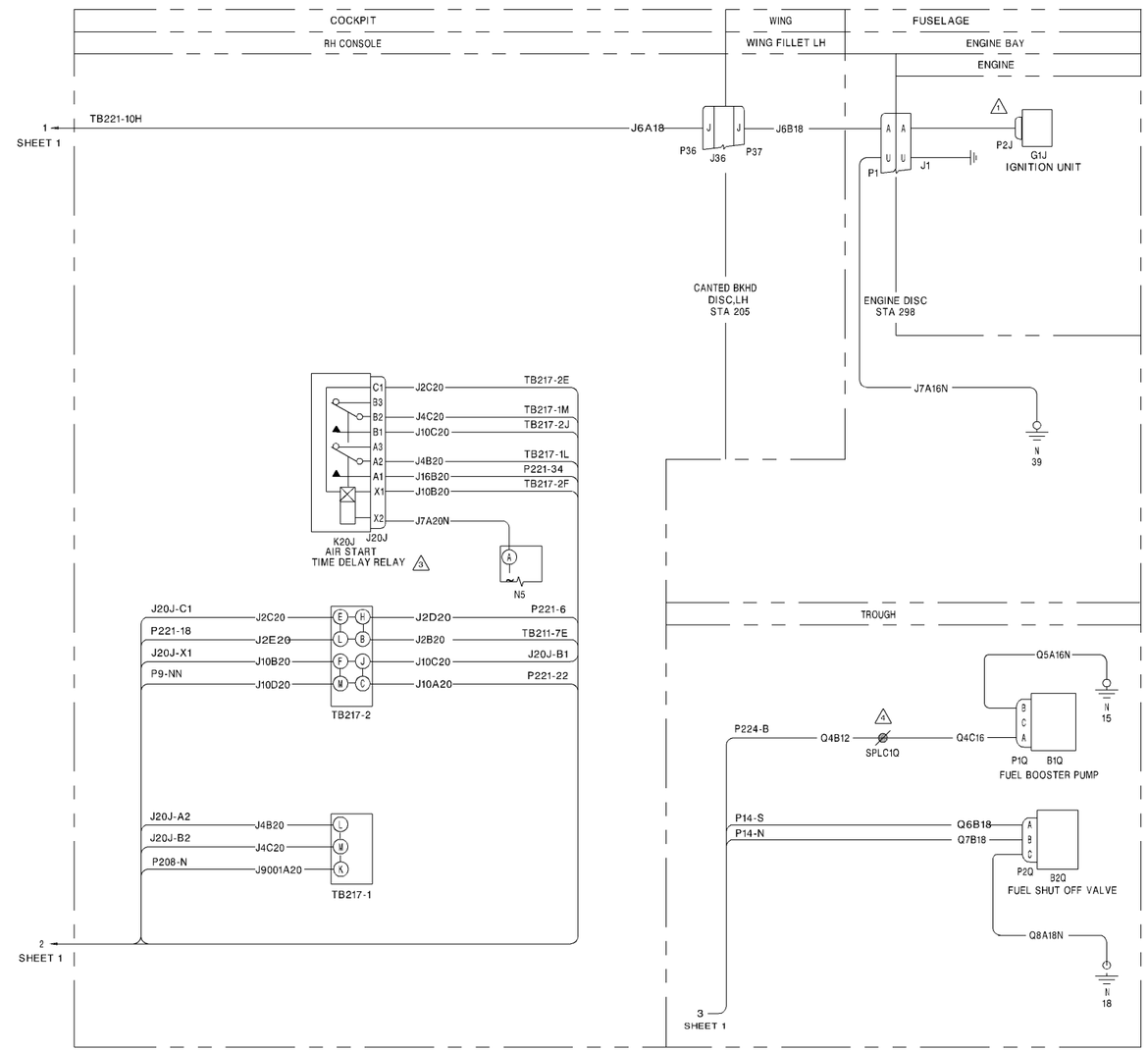

BDW02045

Engine Control – Wiring (Sheet 2 of 2) Figure 2-28

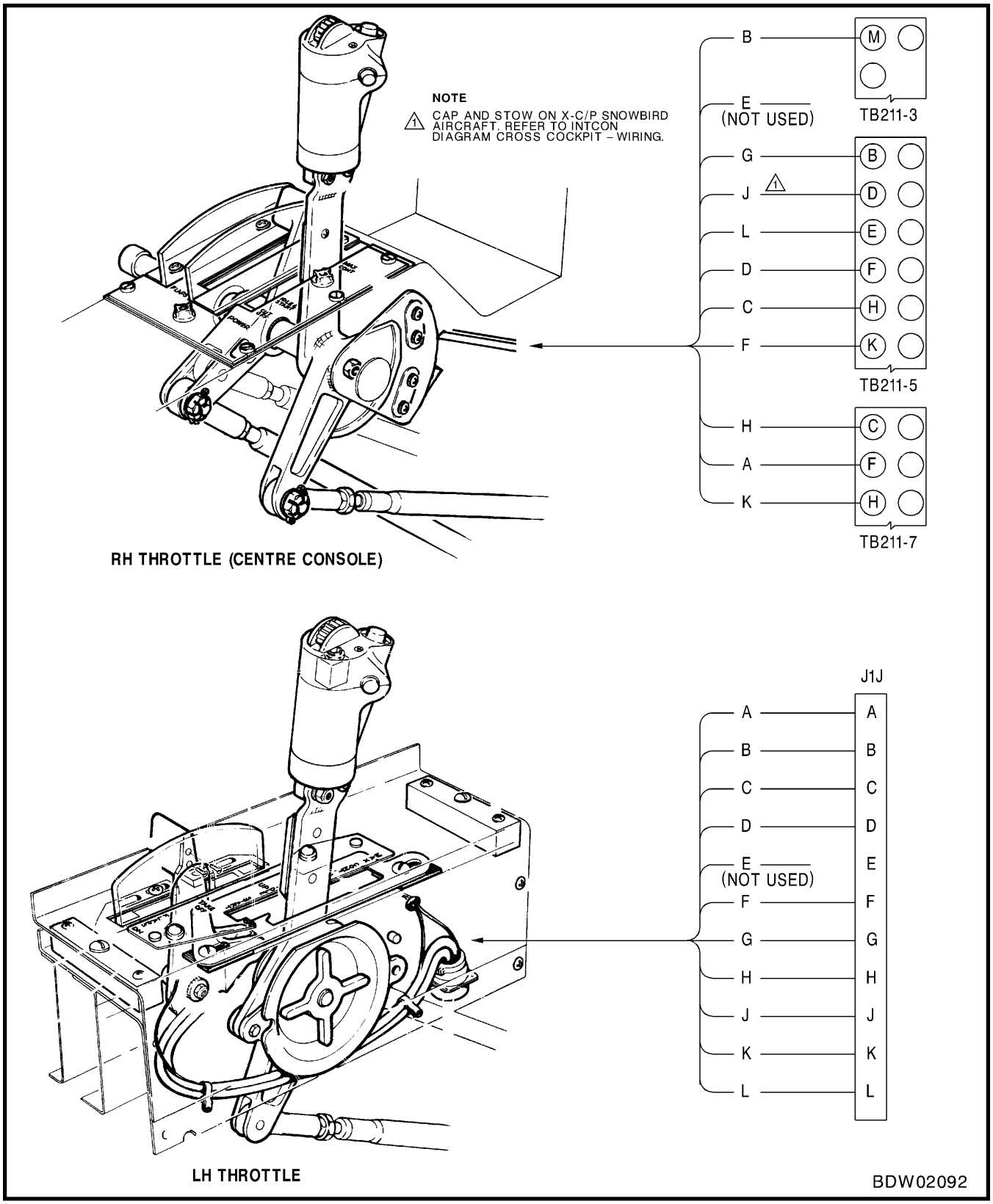

Figure 2-29 Throttle Assemblies – Wiring

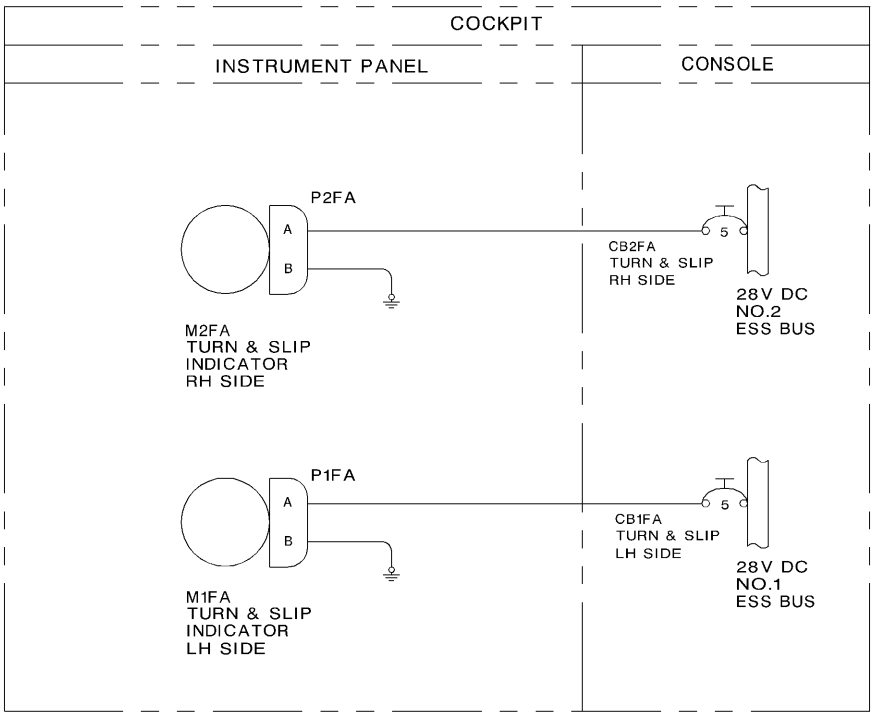

BDW02046

Figure 2-30 Turn and Slip Indicators – Schematic

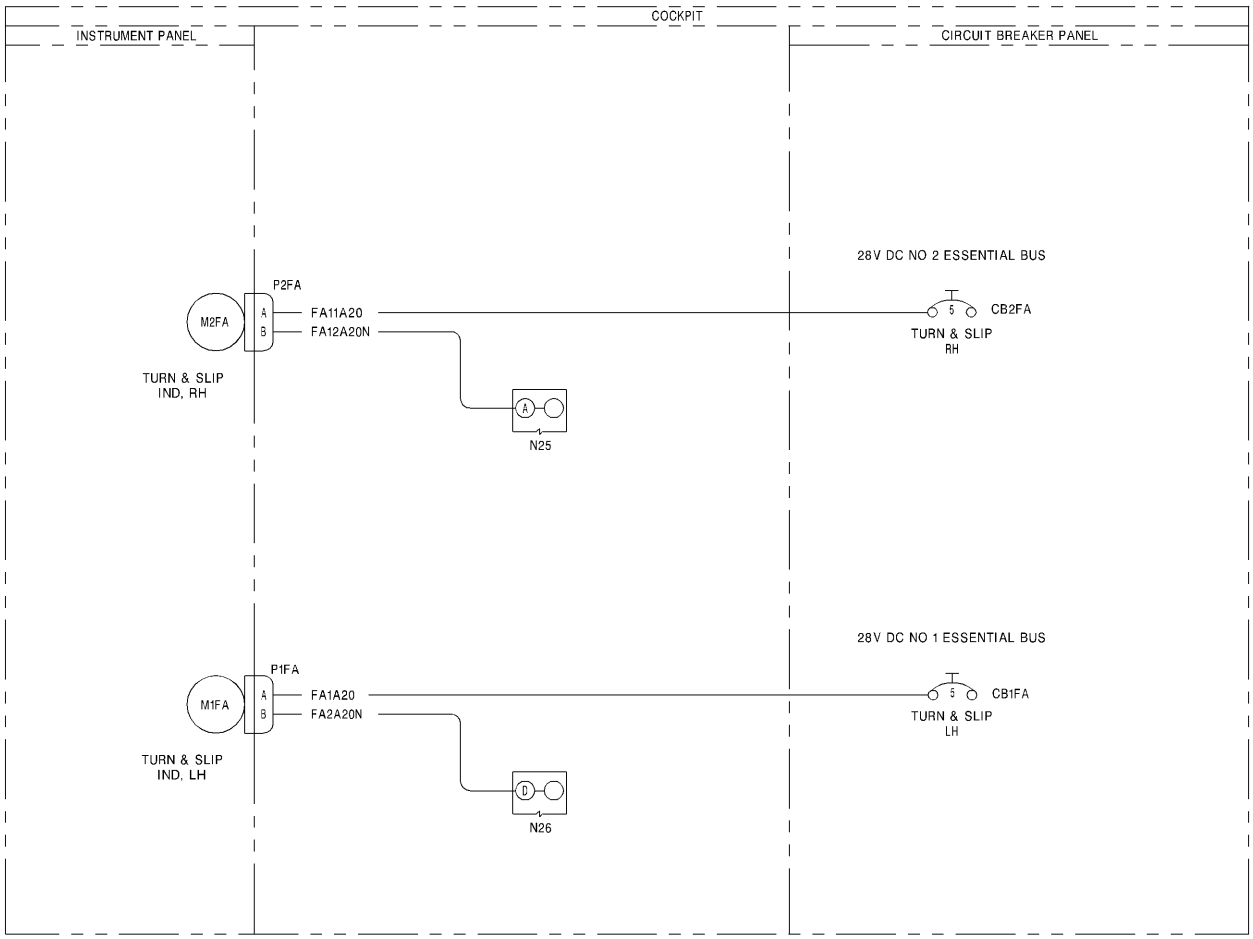

BDW02047

Figure 2-31 Turn and Slip Indicators – Wiring

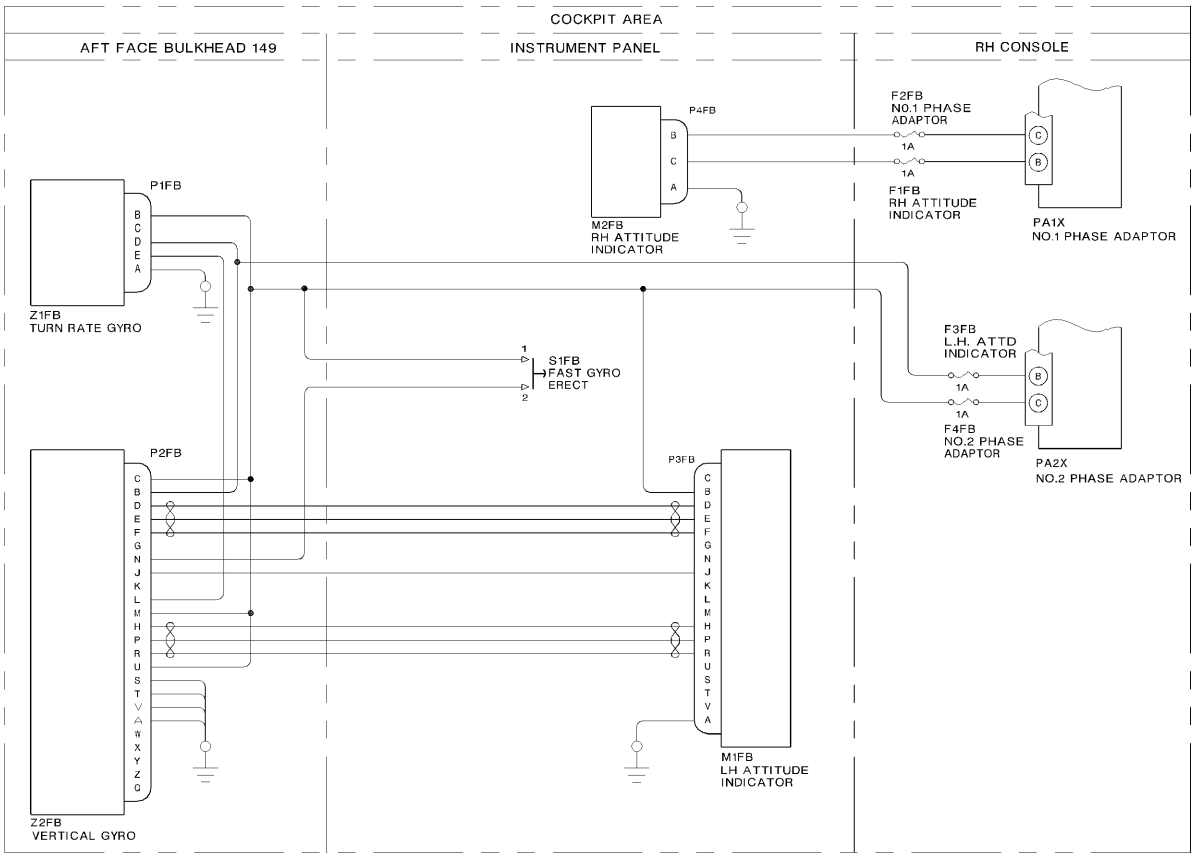

Figure 2-32 Attitude Indicator – Schematic

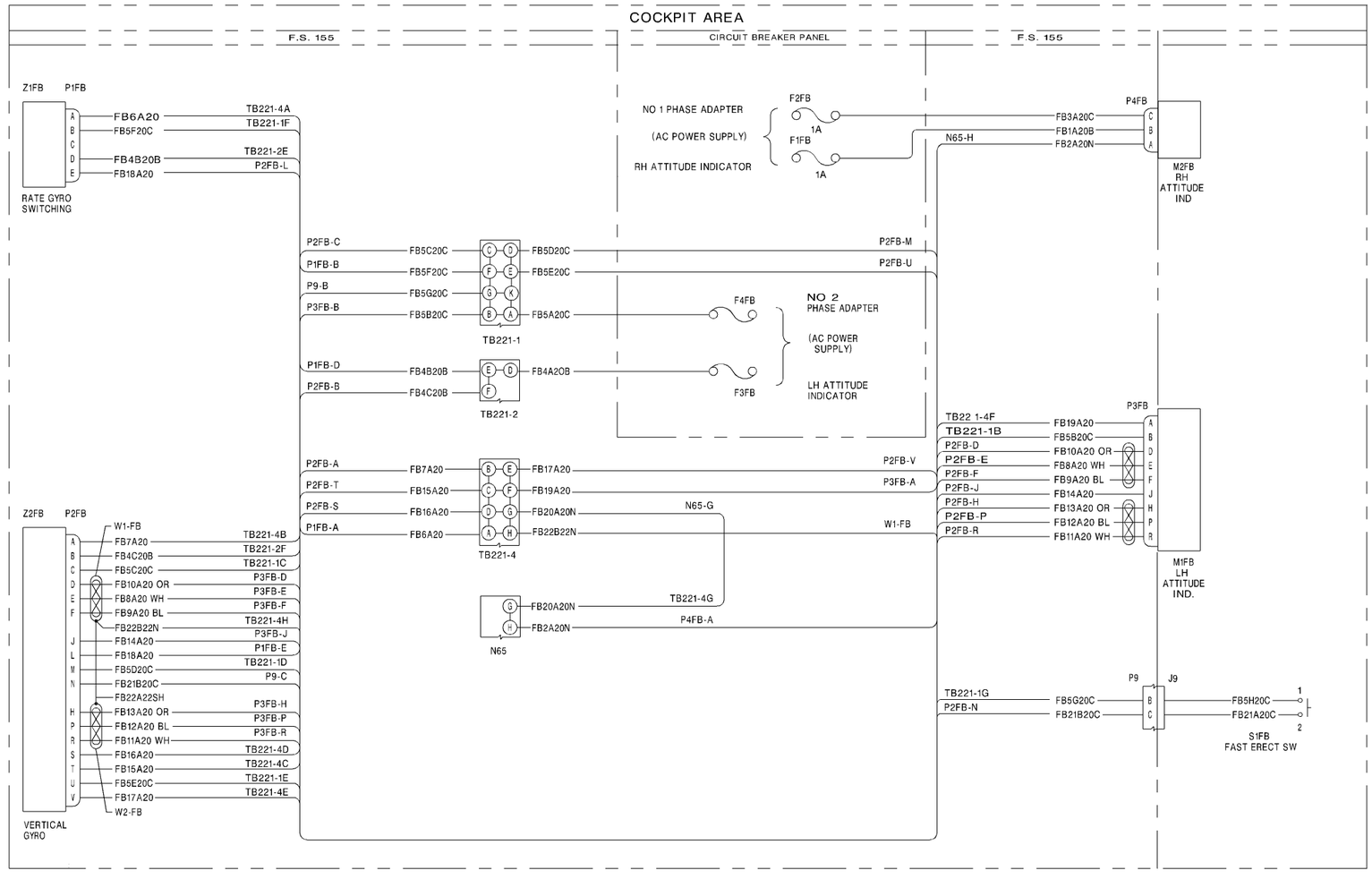

BDW02049

Attitude Indicator – Wiring Figure 2-33

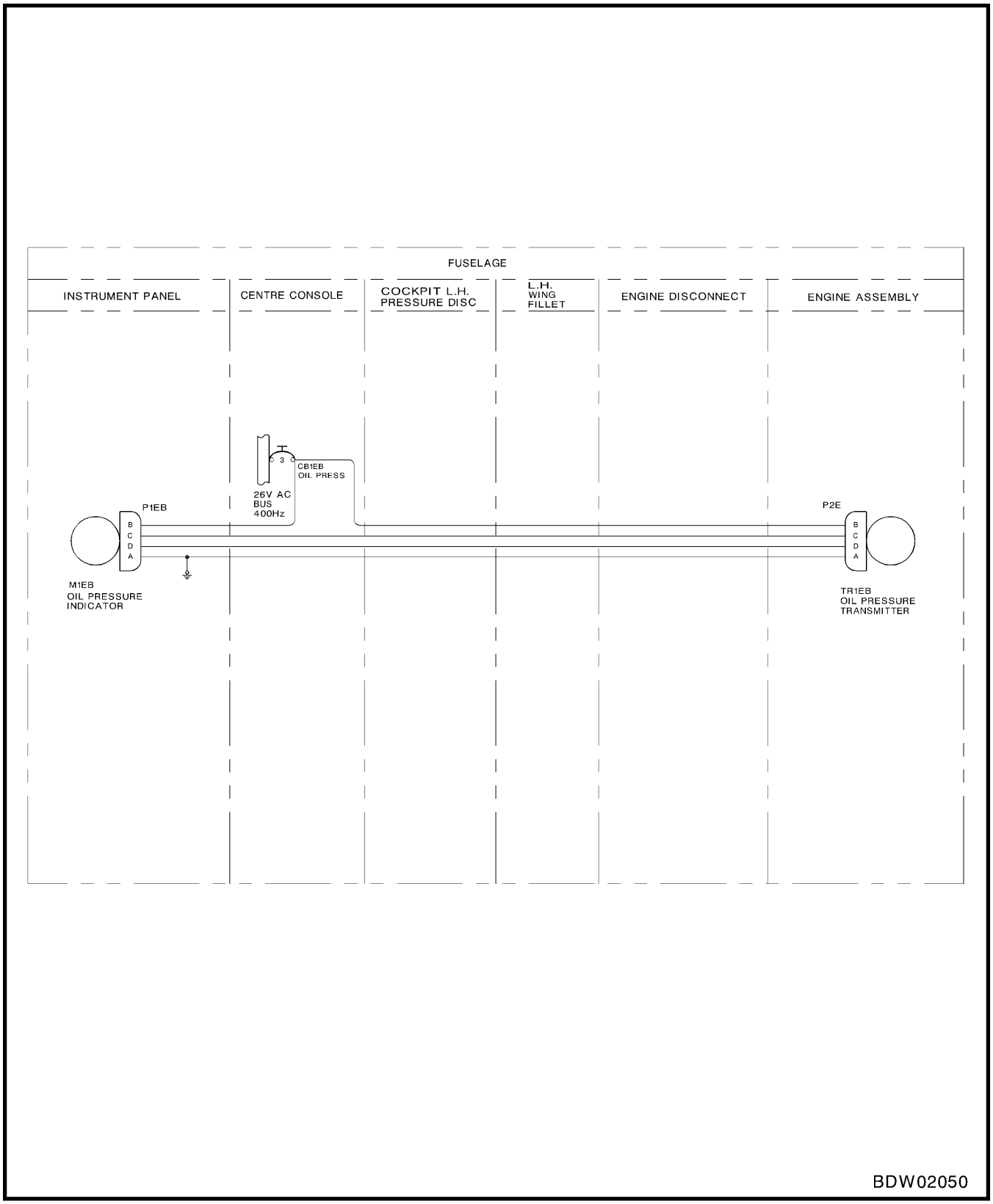

Figure 2-34 Engine Oil Pressure Indicator – Schematic

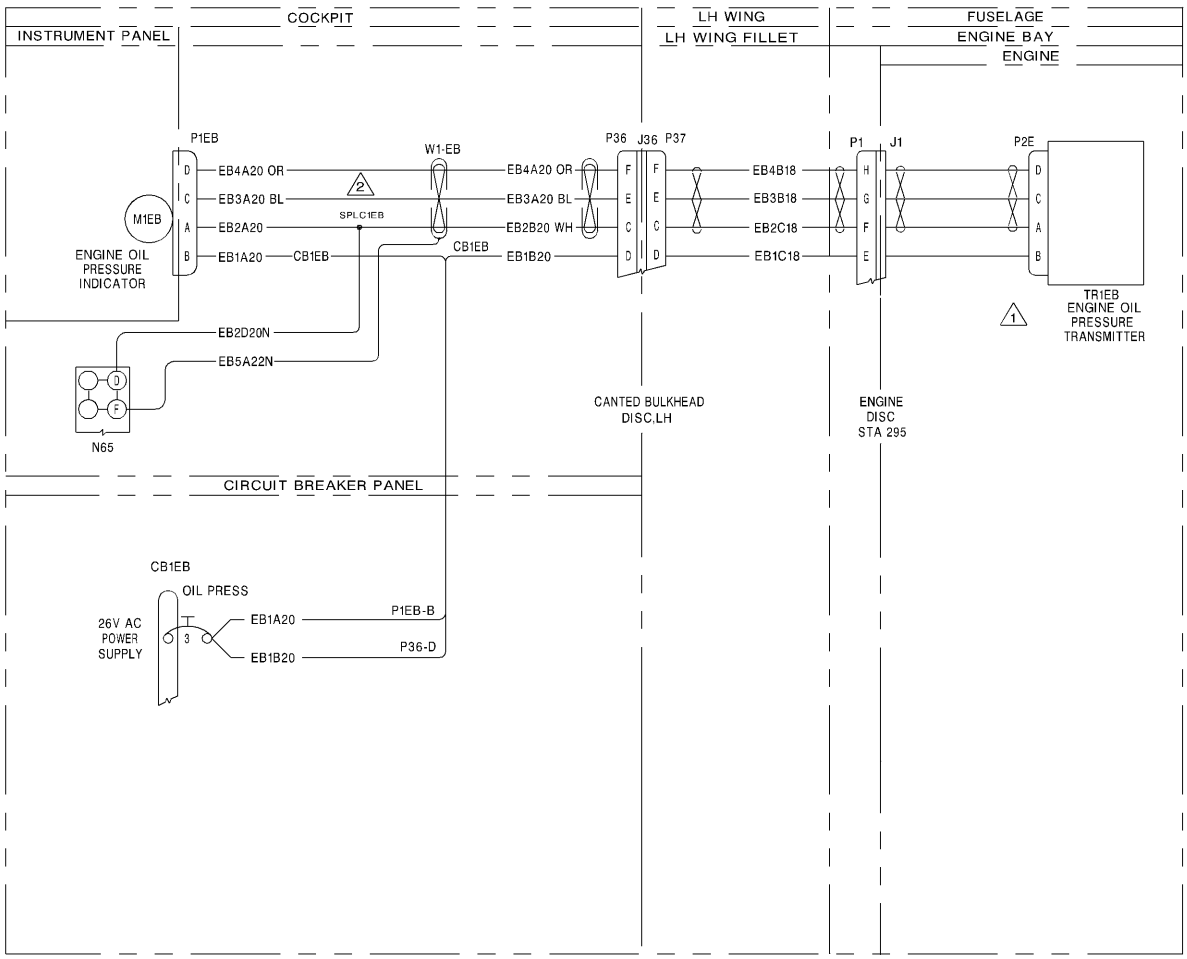

Figure 2-35 Engine Oil Pressure Indicator – Wiring

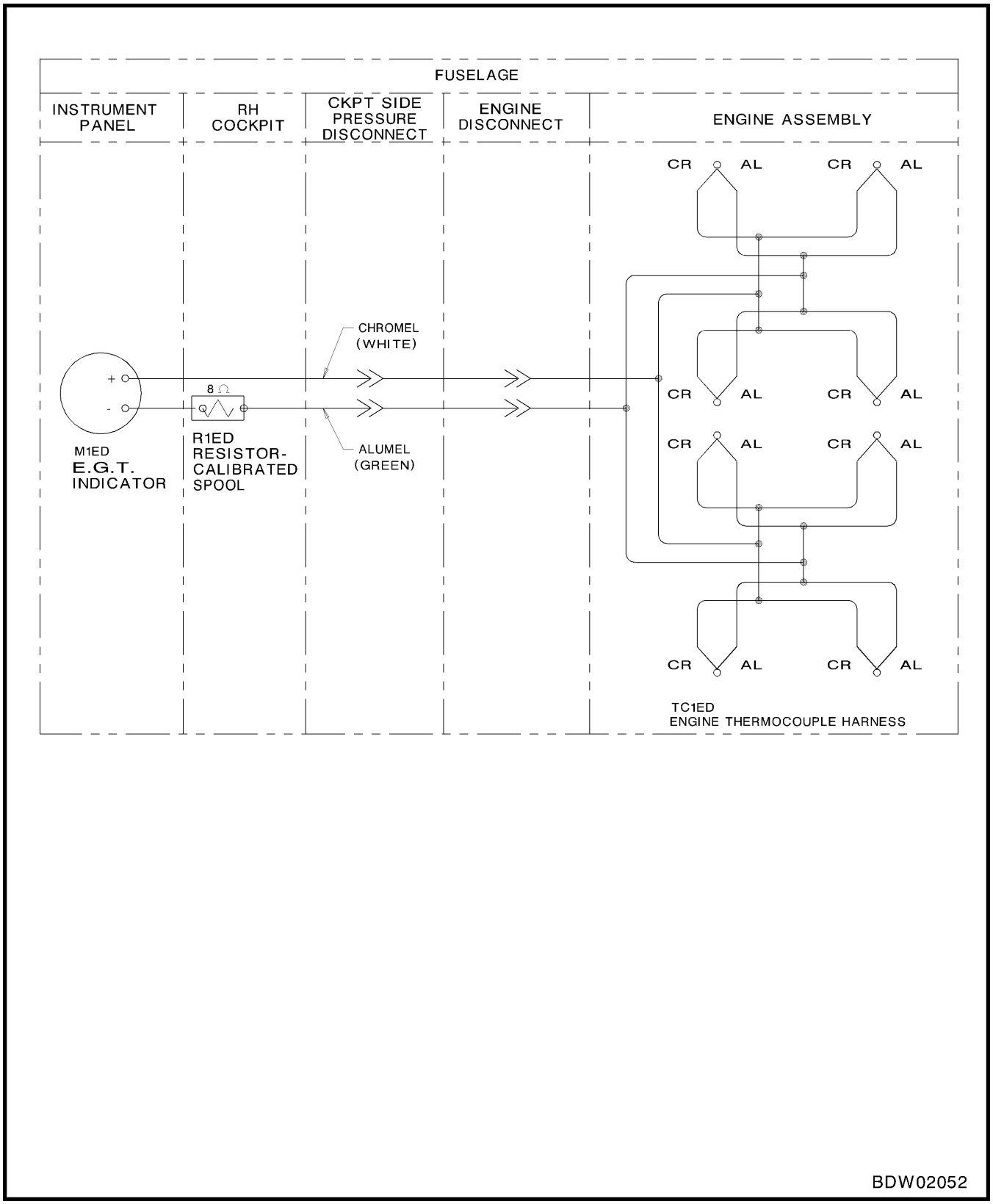

Figure 2-36 Turbine Exhaust Gas Temperature Indicator – Schematic

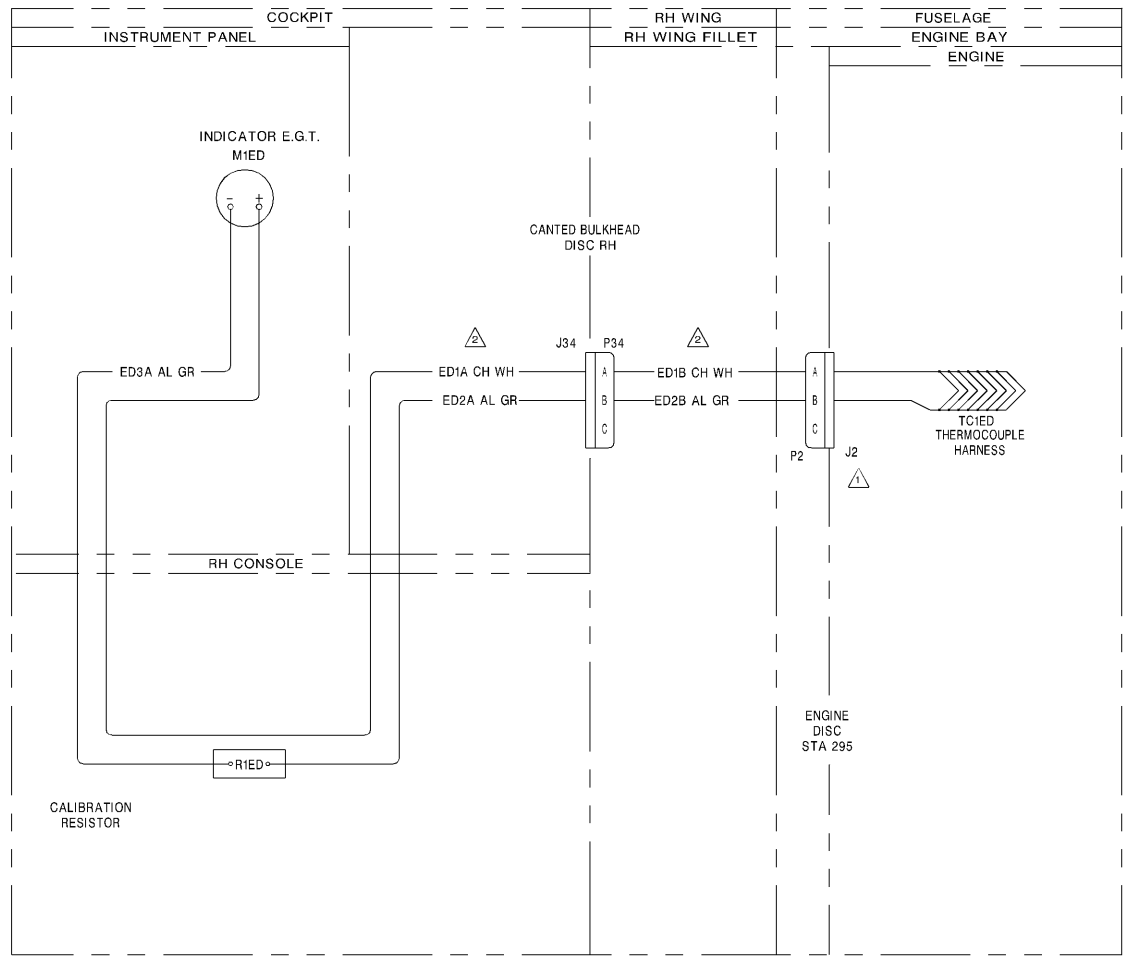

NOTES:

1. P/O ENGINE
2. THERMOCOUPLE WIRE TO BE CHROMEL ALUMEL TO MIL-W-5846,TYPE II,CLASS a. 166.7 OHM 125 FT.

BDW02053

Figure 2-37 Turbine Exhaust Gas Temperature Indicator – Wiring

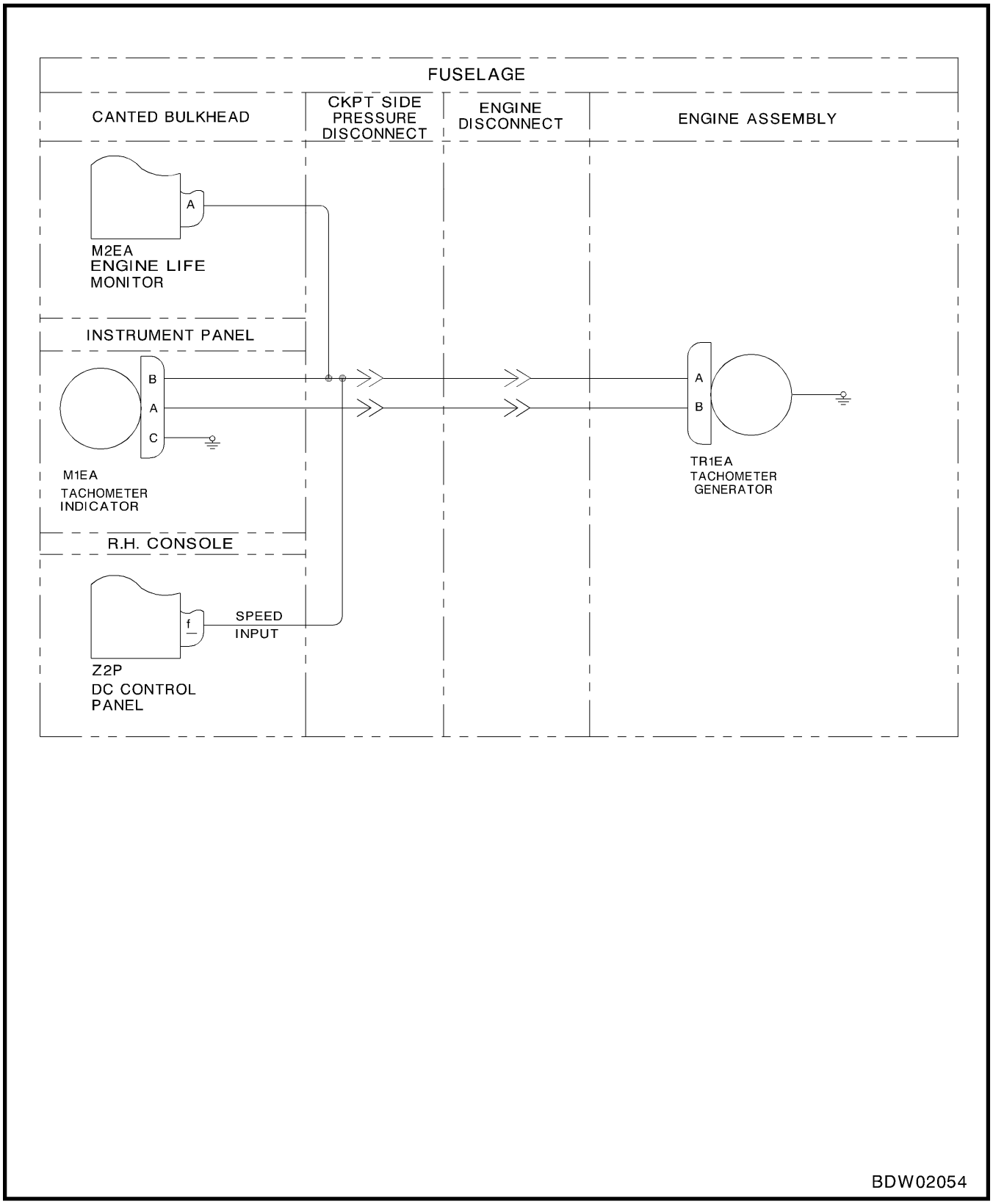

Figure 2-38 Engine Tachometer – Schematic

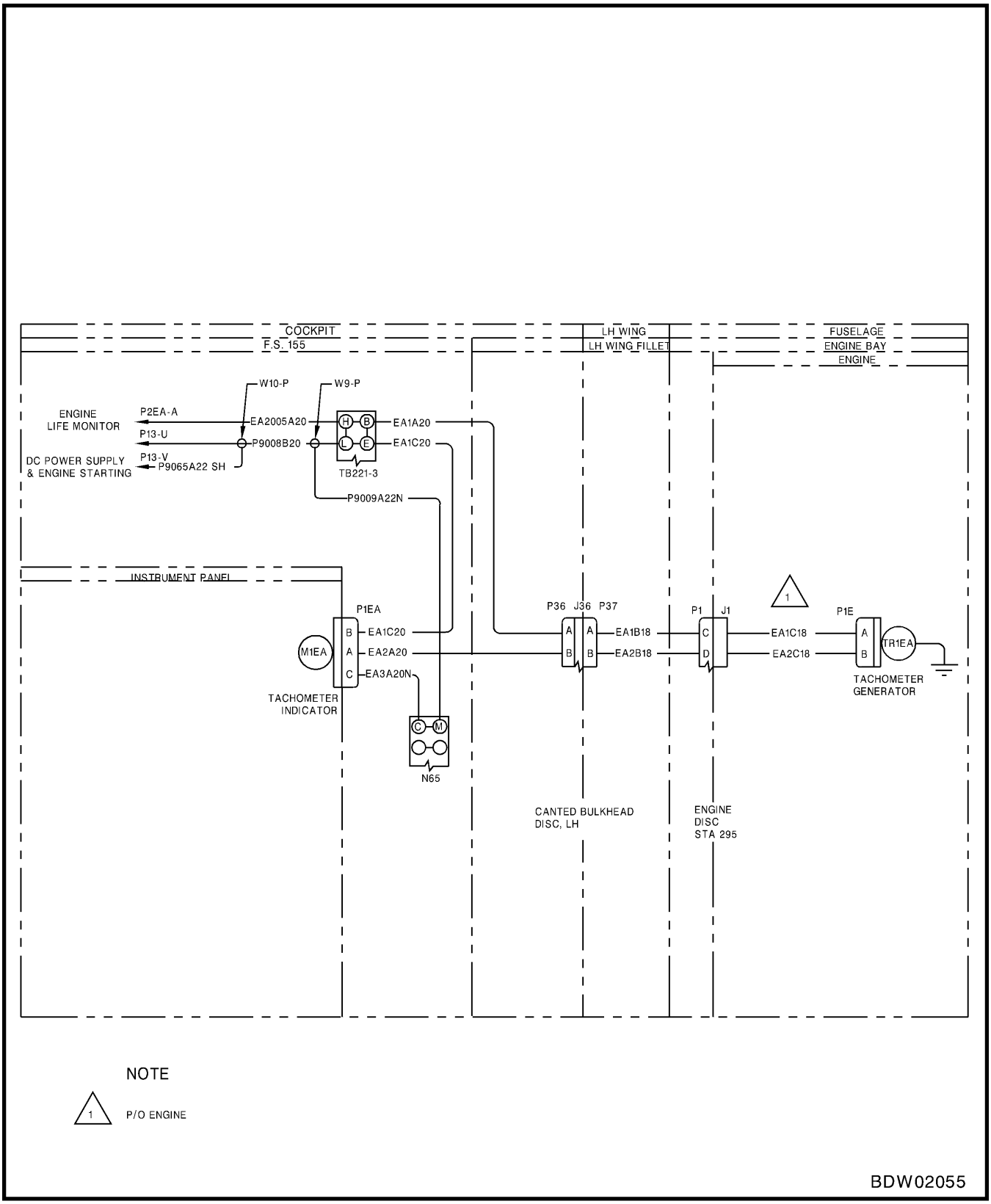

Figure 2-39 Engine Tachometer – Wiring

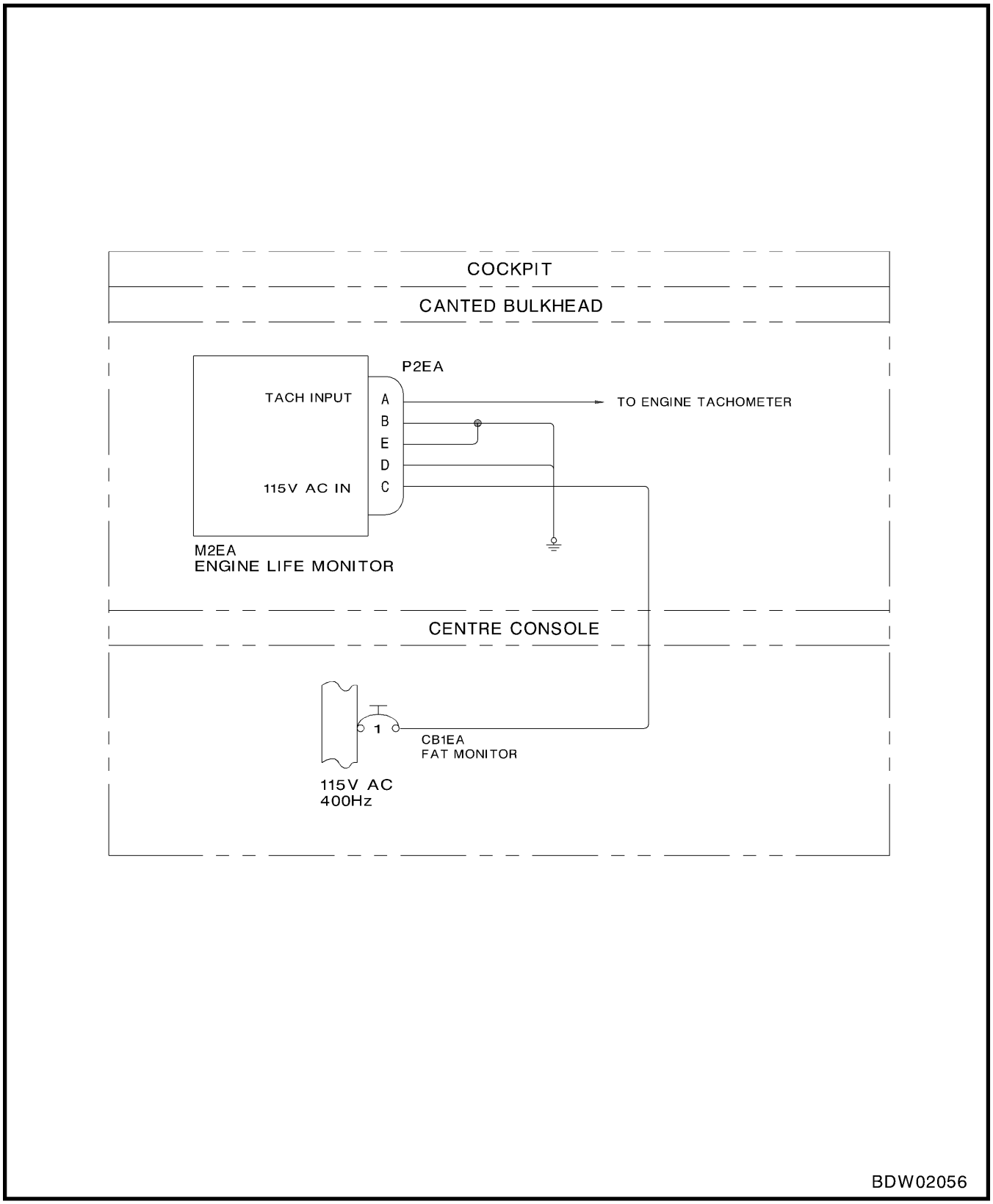

Figure 2-40 Engine Life Monitor – Schematic

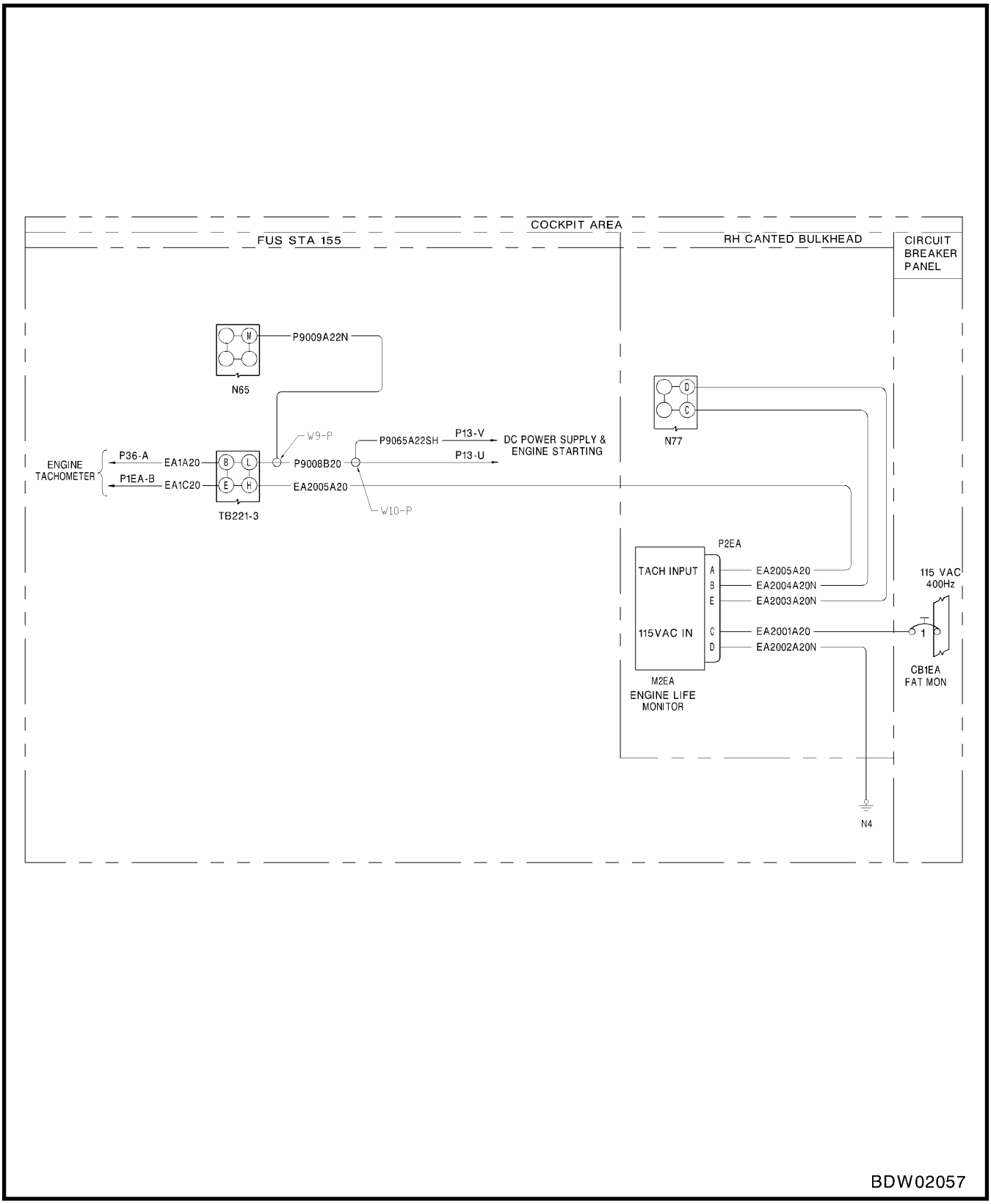

Figure 2-41 Engine Life Monitor – Wiring

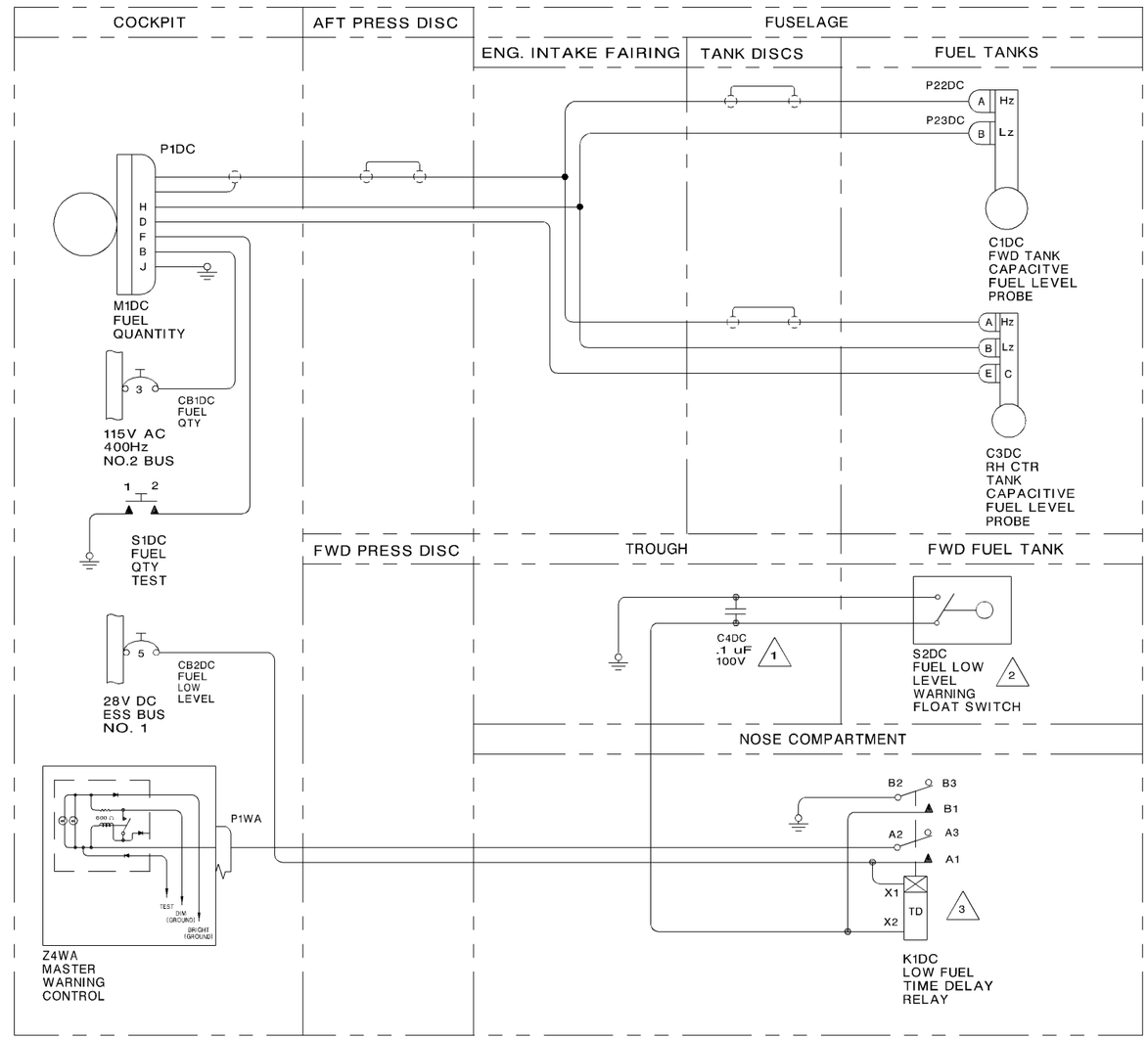

NOTES :

1. LOCATED IN DISCRETE COMPONENT BOX A1 (FS 145), REFER TO NOSE DISCRETE COMPONENT BOX.
2. OPENS ON RISING FUEL LEVEL.
3. DELAY ON OPERATE: 16 SECONDS.

BDW02058

Fuel Quantity and Low Level Warning Indicator – Schematic Figure 2-42

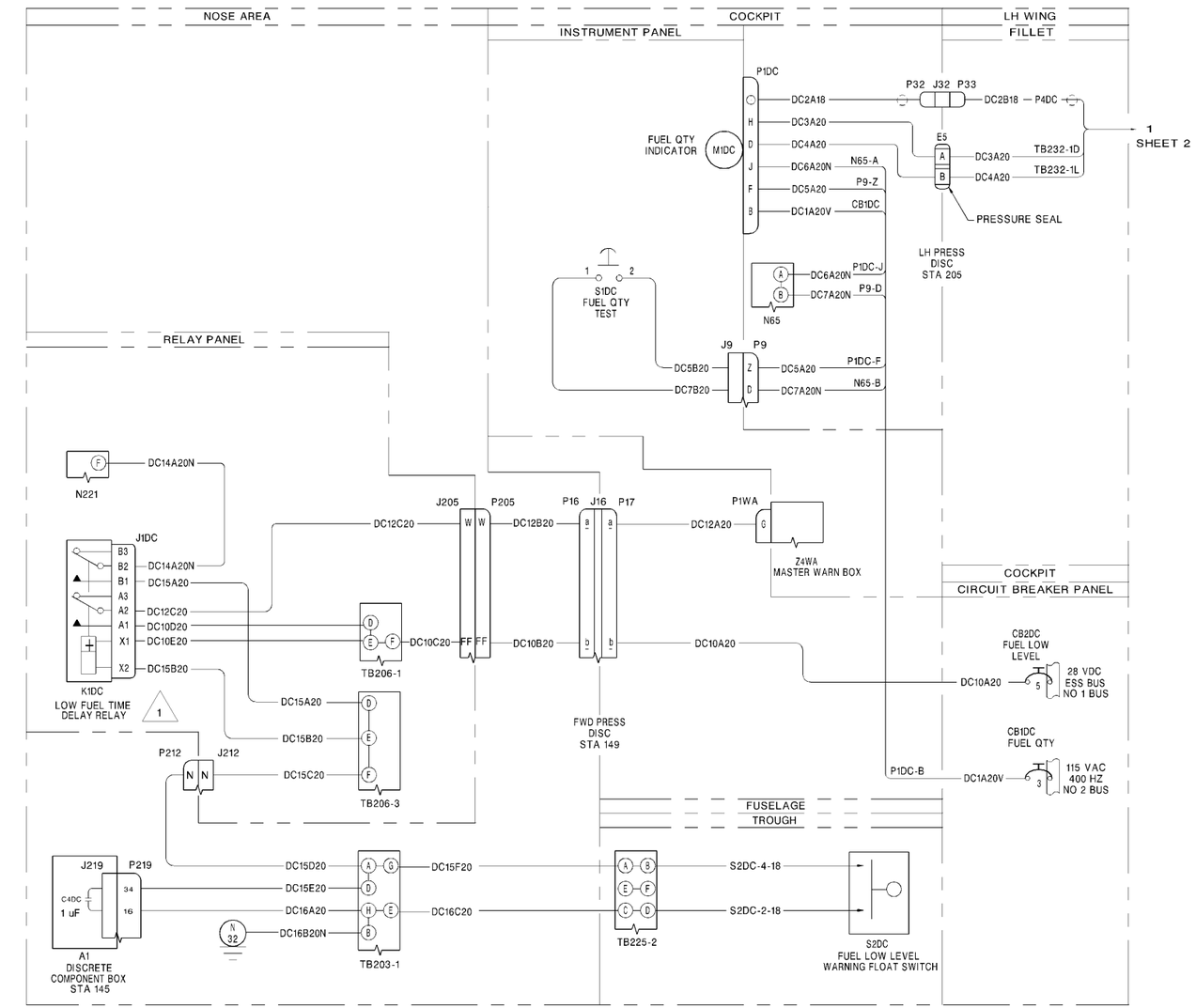

NOTE:

1. Time Delay is 16 seconds before relay closes.

BDW02059

Fuel Quantity and Low Level Warning Indicator – Wiring (Sheet 1 of 2) Figure 2-43

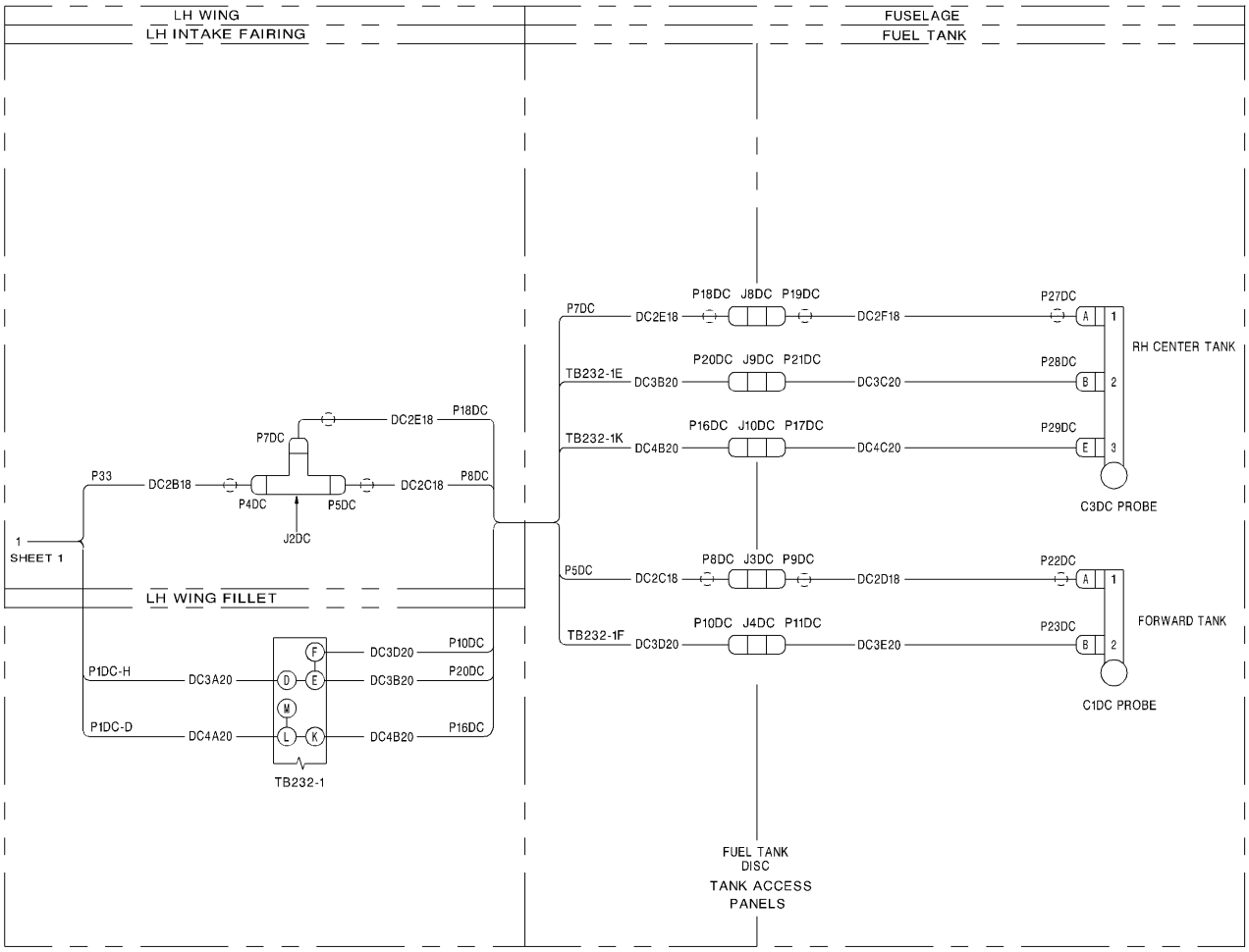

Figure 2-43 (Sheet 2 of 2) Fuel Quantity and Low Level Warning Indicator – Wiring

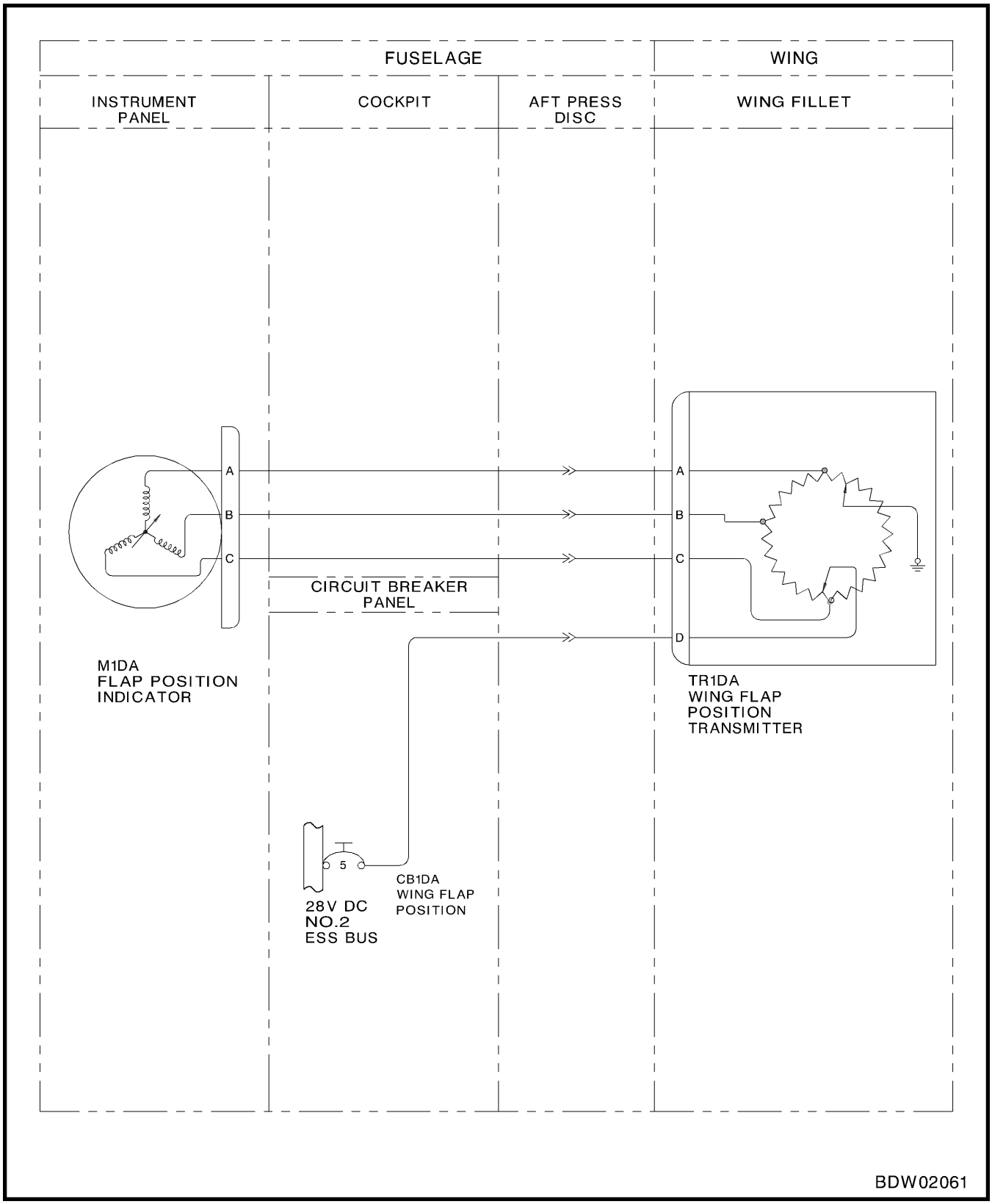

Figure 2-44 Wing Flap Position Indicator – Schematic

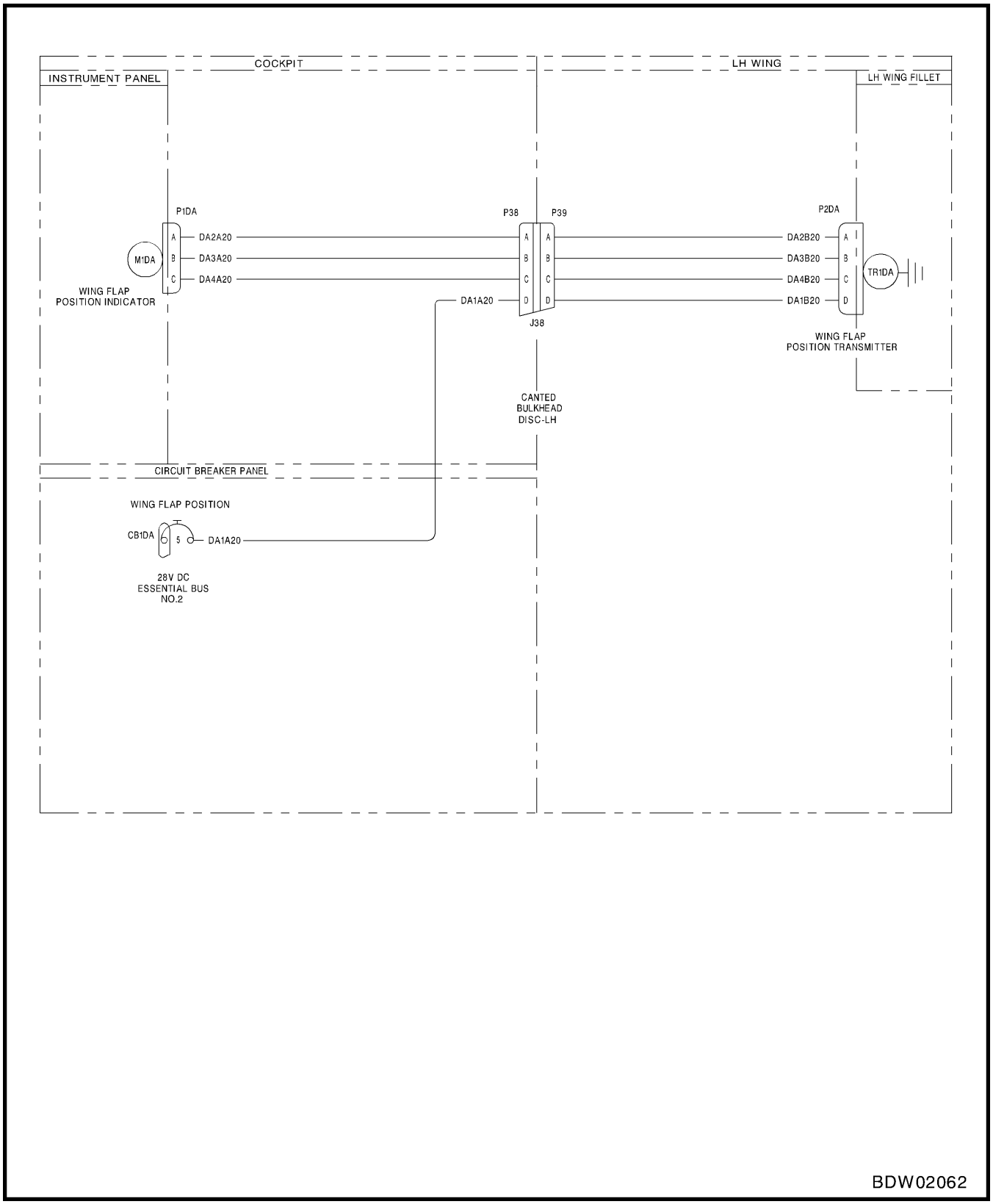

Figure 2-45 Wing Flap Position Indicator – Wiring

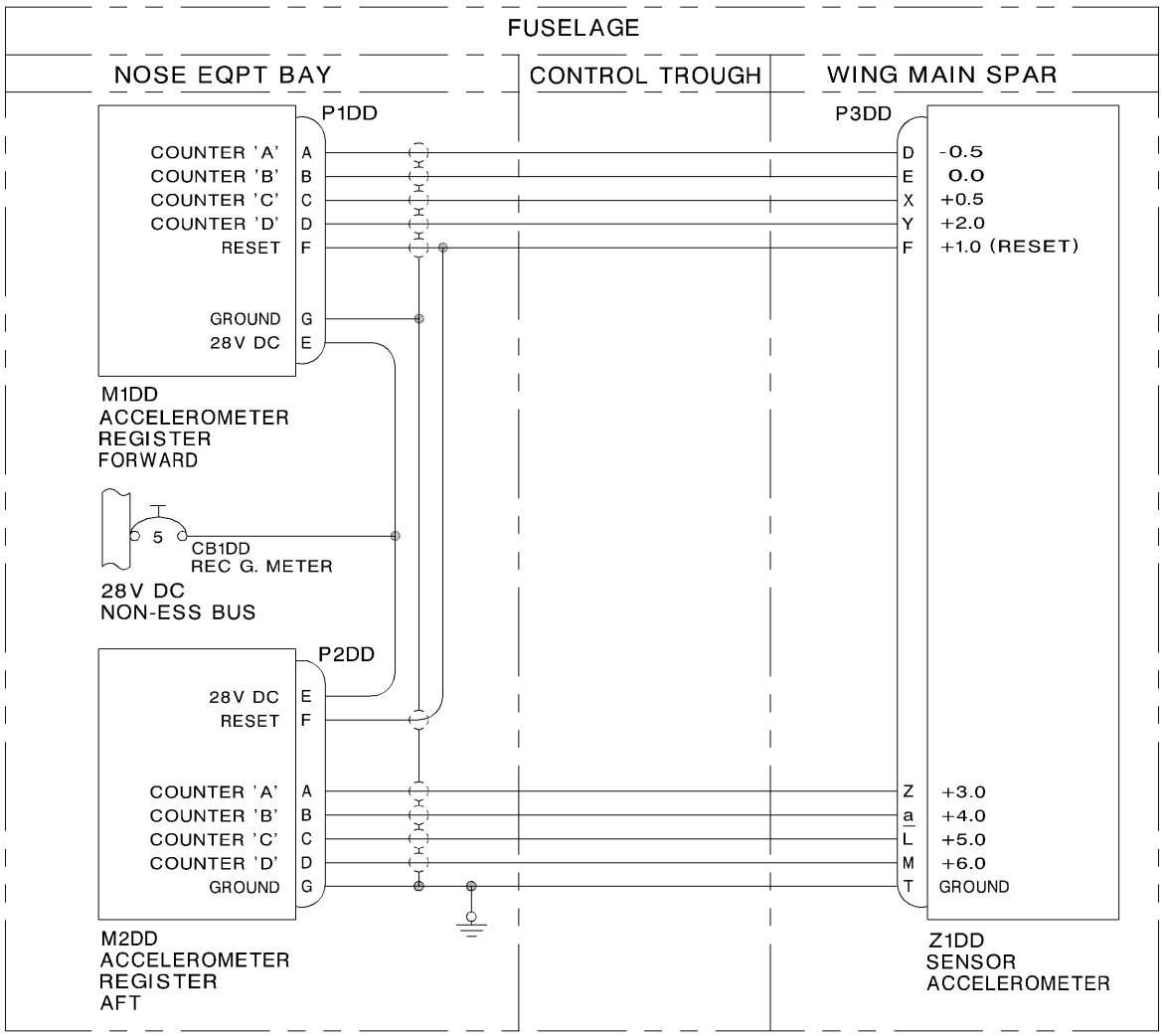

BDW02063

Figure 2-46 Registering Accelerometer – Schematic

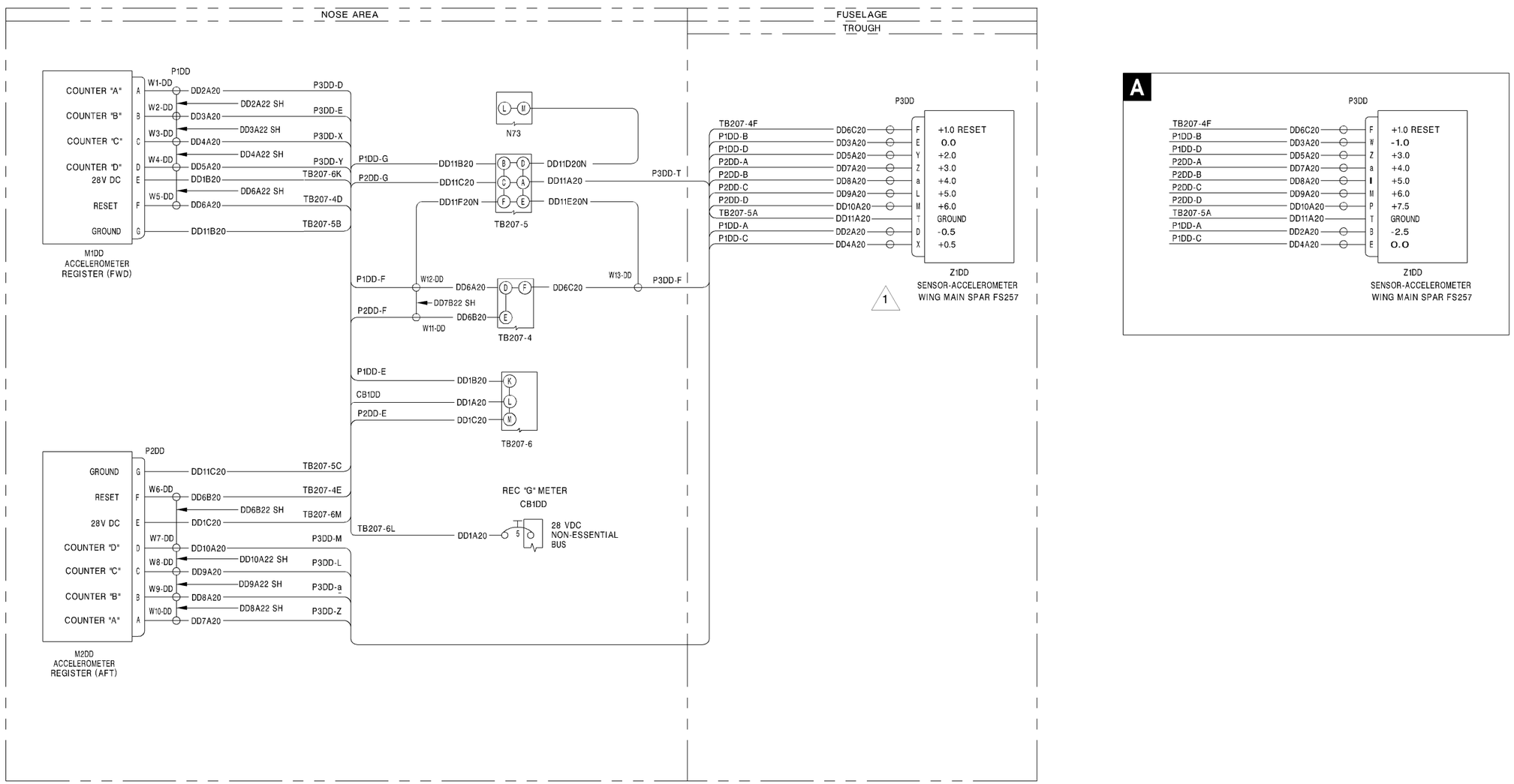

NOTE

1 FOR SNOWBIRD CONFIGURATION REFER DETAIL A

BDW02064

Registering Accelerometer – Wiring Figure 2-47

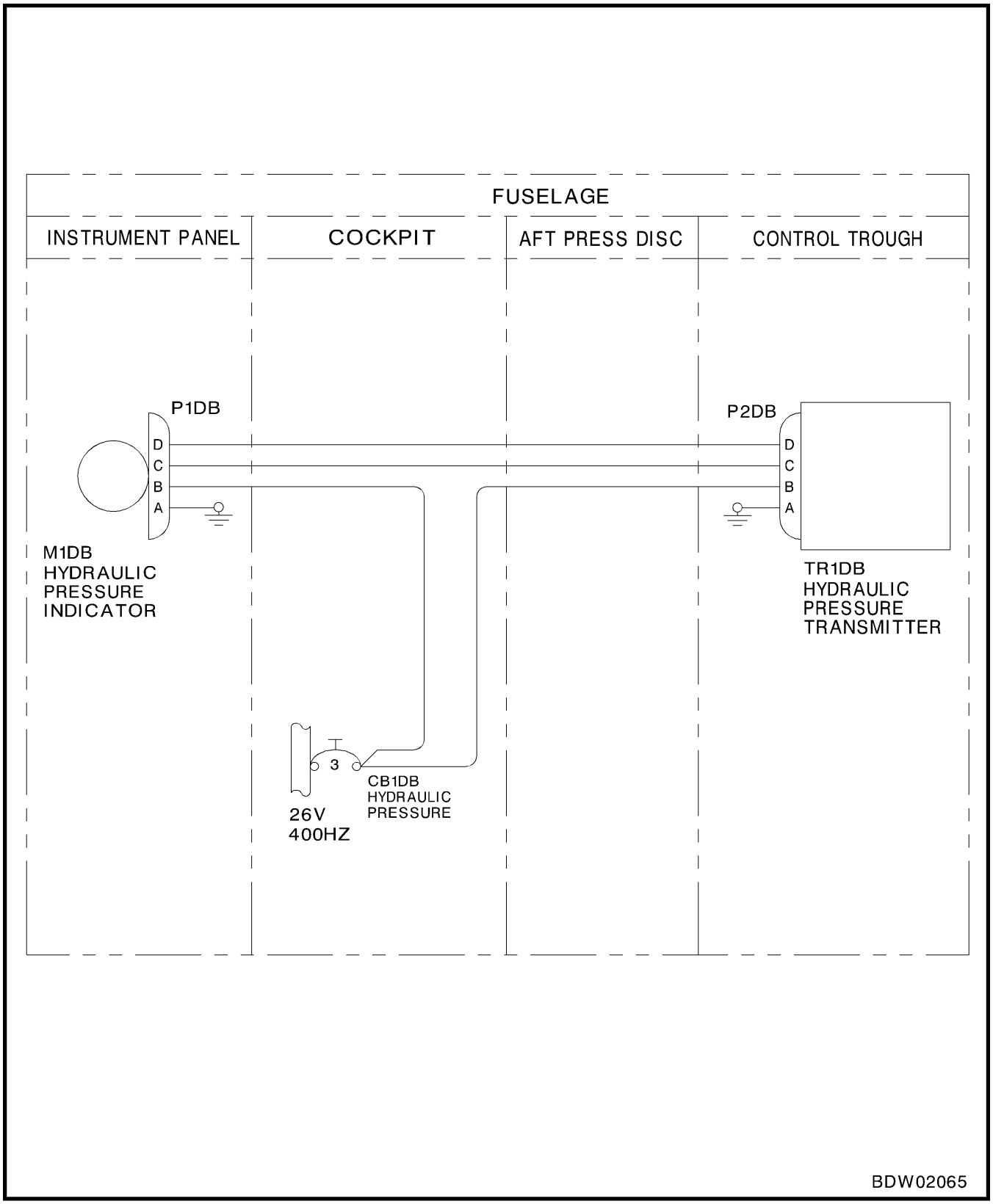

Figure 2-48 Hydraulic Pressure Indicator – Schematic

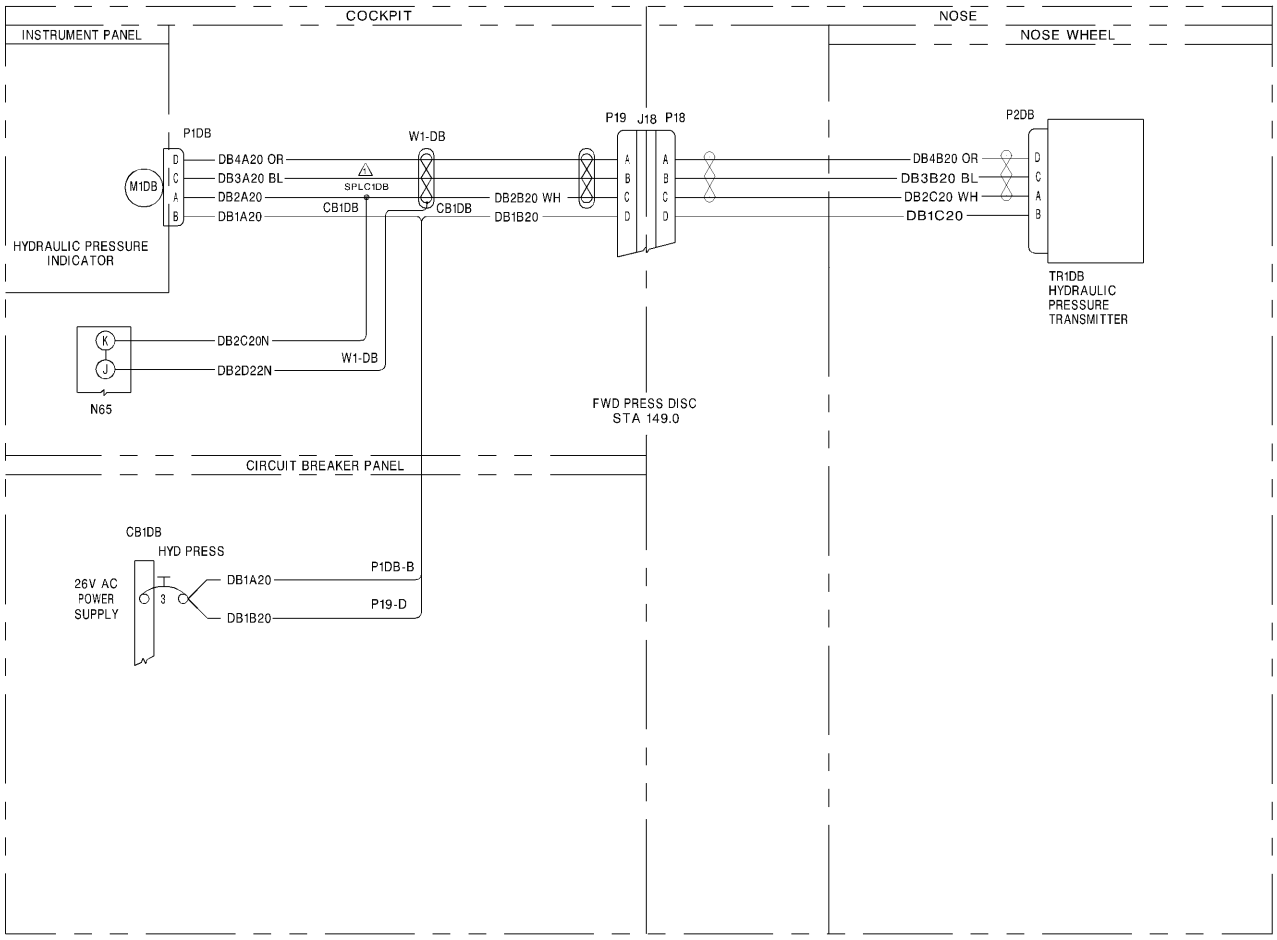

NOTE :
1 SPLICE LOCATED NEAR P1DB

BDW02066

Figure 2-49 Hydraulic Pressure Indicator – Wiring

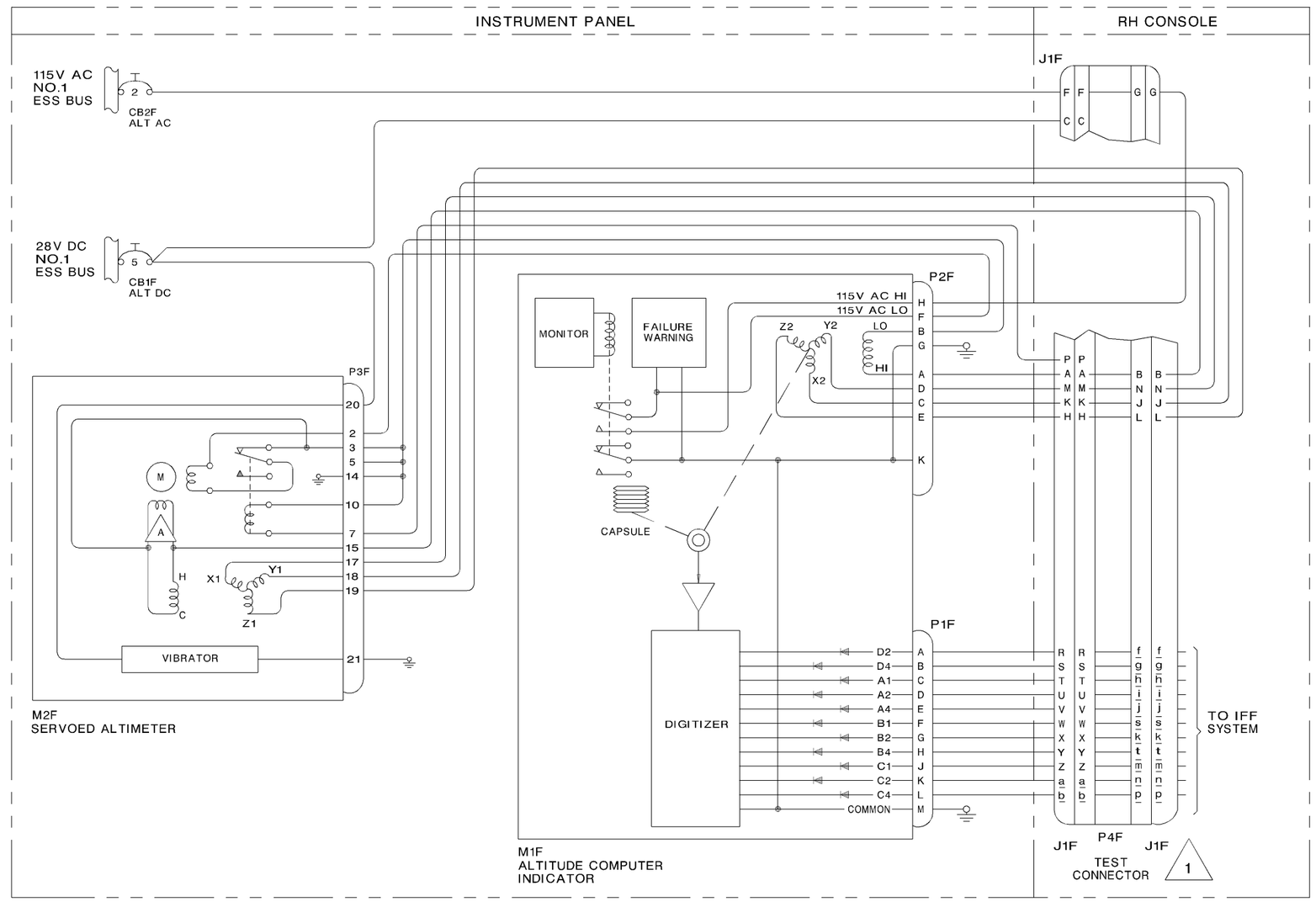

NOTES :

1. EACH CIRCUIT OF THE TEST RECEPTACLE IS SHOWN. THE SYSTEM INCLUDES A JUMPER PLUG FOR THE RECEPTACLE, CONNECTING TOGETHER THE TWO PINS INDICATED IN EACH BLOCK.

BDW02067

Servoed Altimeter System – Schematic Figure 2-50

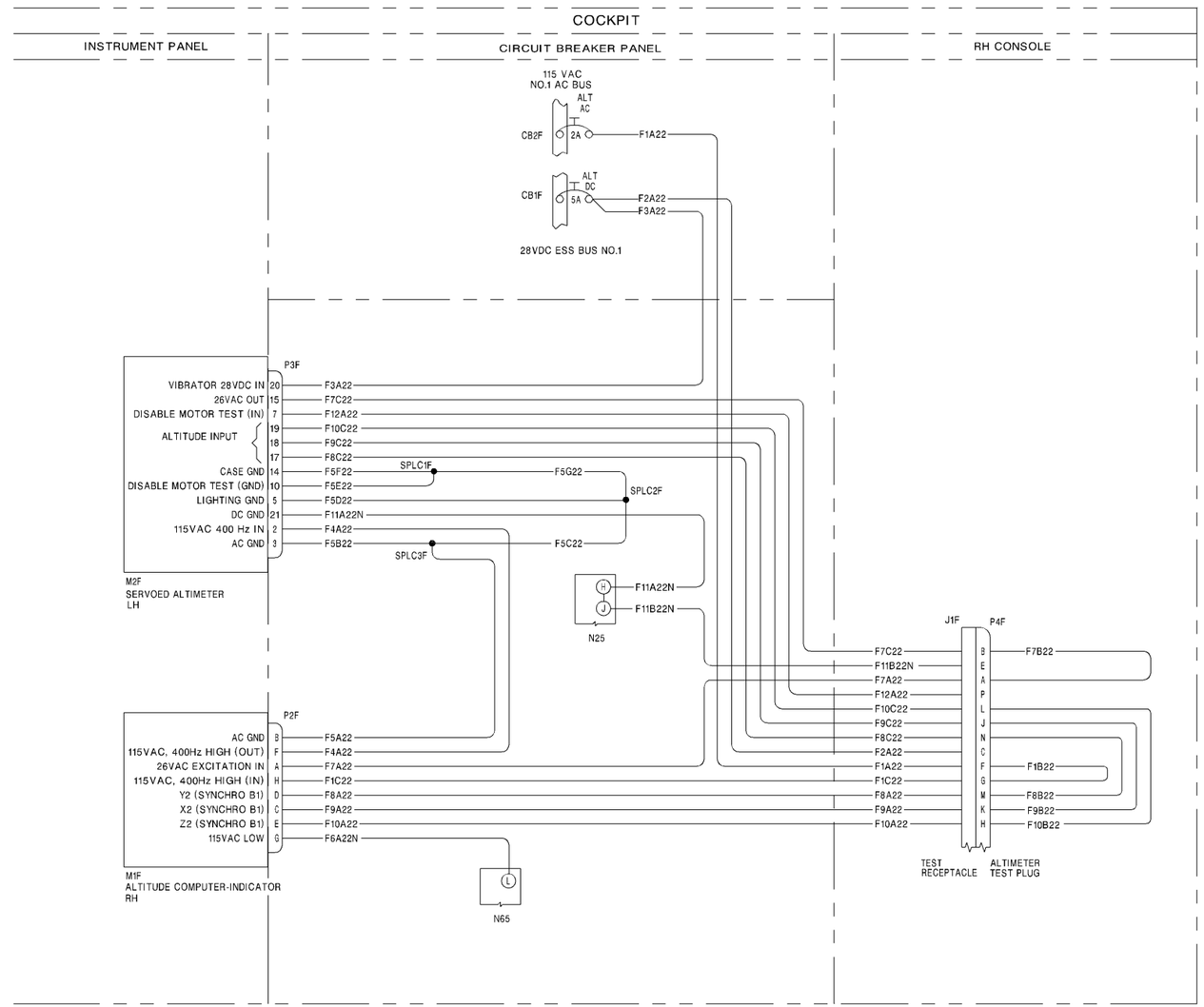

BDW02068

Servoed Altimeter System – Wiring Figure 2-51

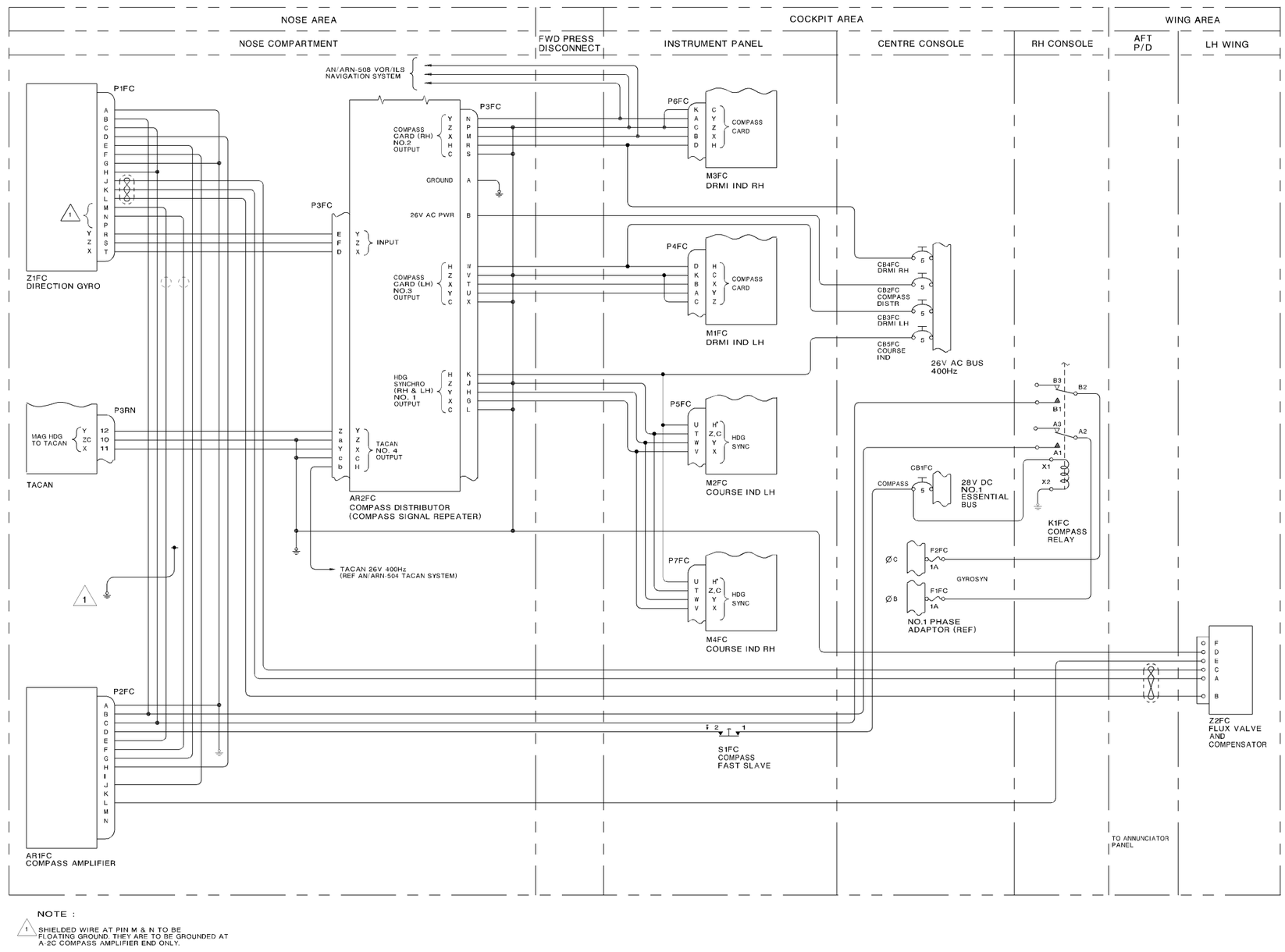

NOTE :

1. SHIELDED WIRE AT PIN M & N TO BE FLOATING GROUND. THEY ARE TO BE GROUNDED AT A-2C COMPASS AMPLIFIER END ONLY.

BDW02069

Compass System – Schematic Figure 2-52

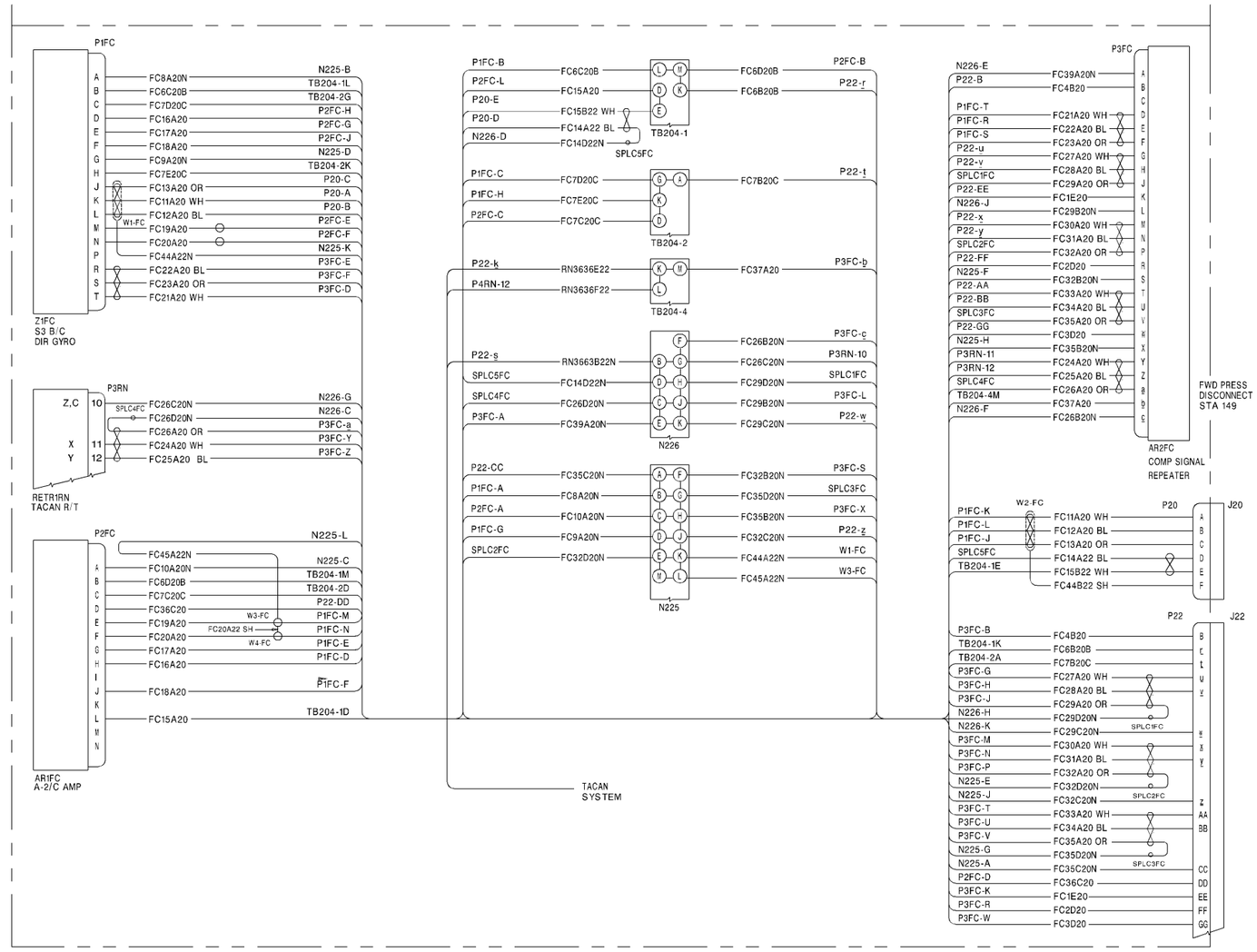

BDW02070

Compass System – Wiring (Sheet 1 of 3) Figure 2-53

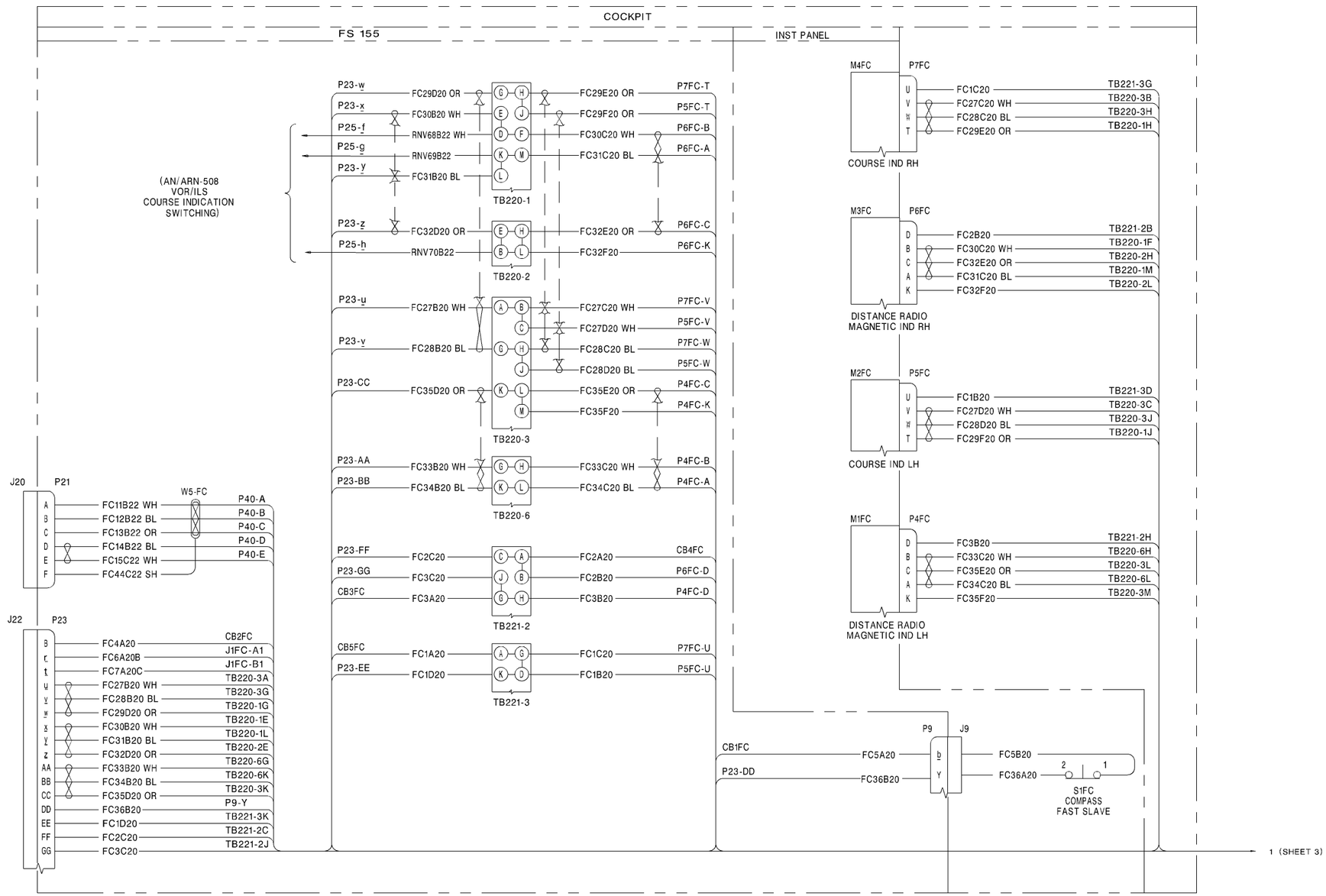

Compass System – Wiring (Sheet 2 of 3) Figure 2-53

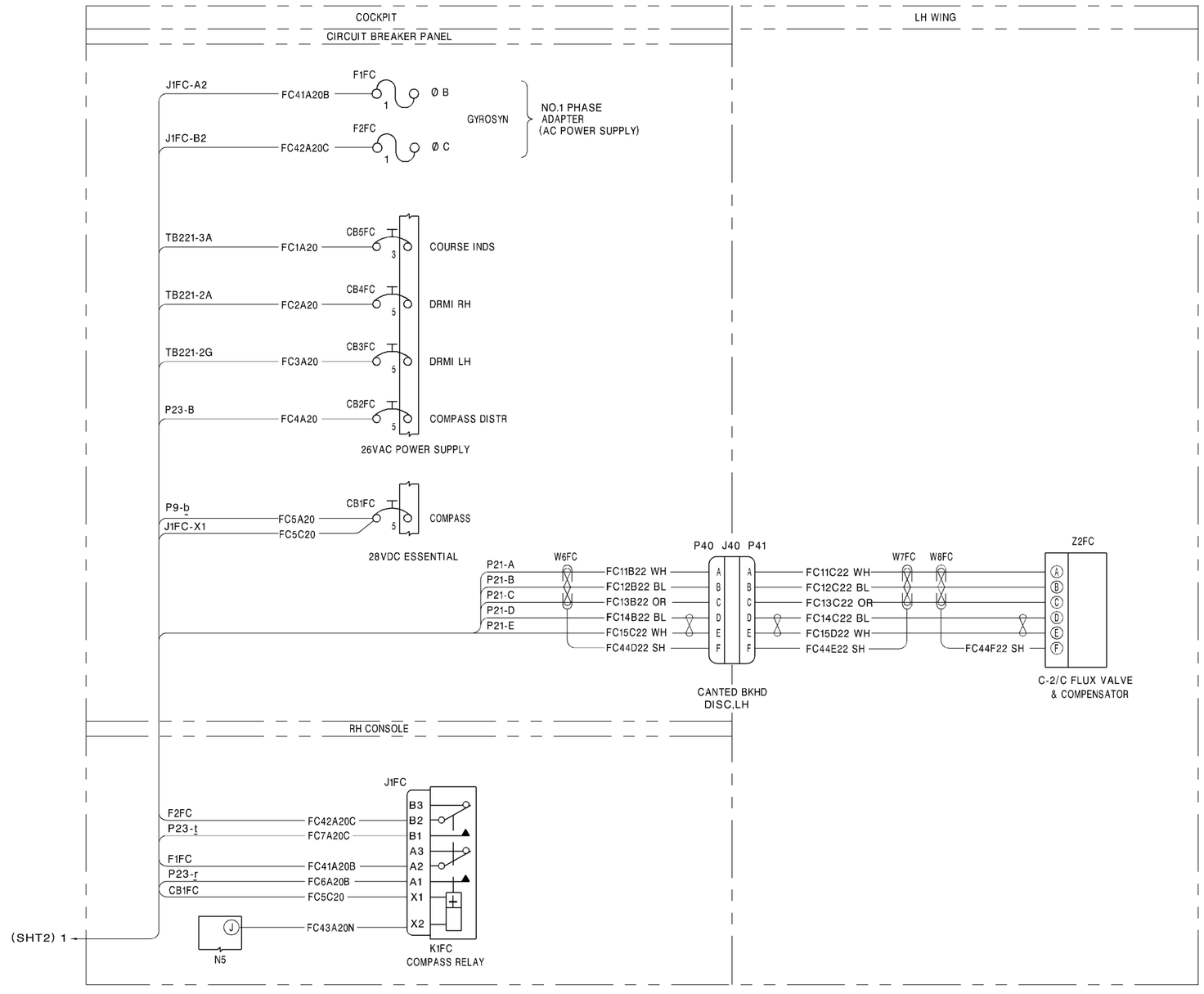

Compass System – Wiring (Sheet 3 of 3) Figure 2-53

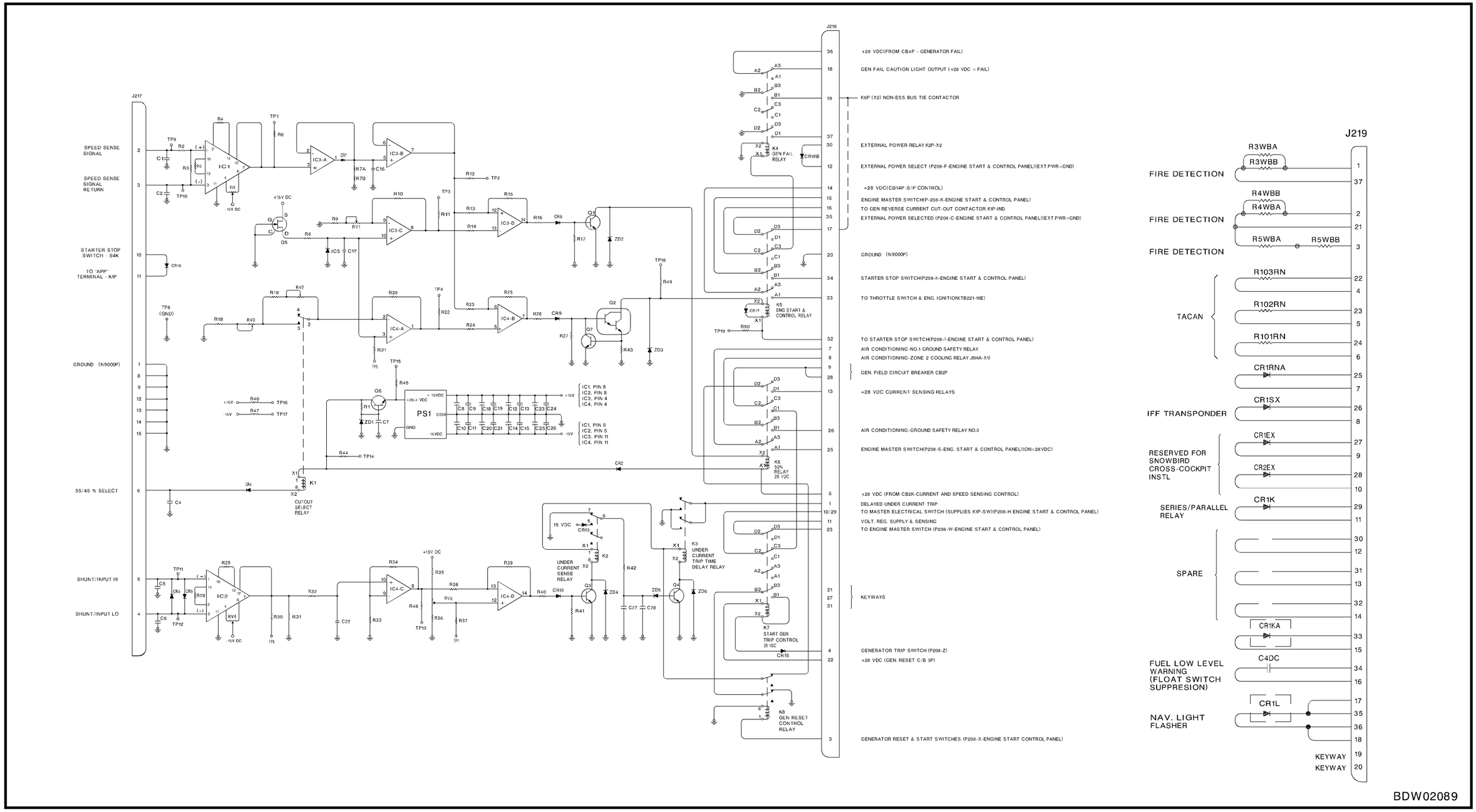

Discrete Component Box – Nose Figure 2-54

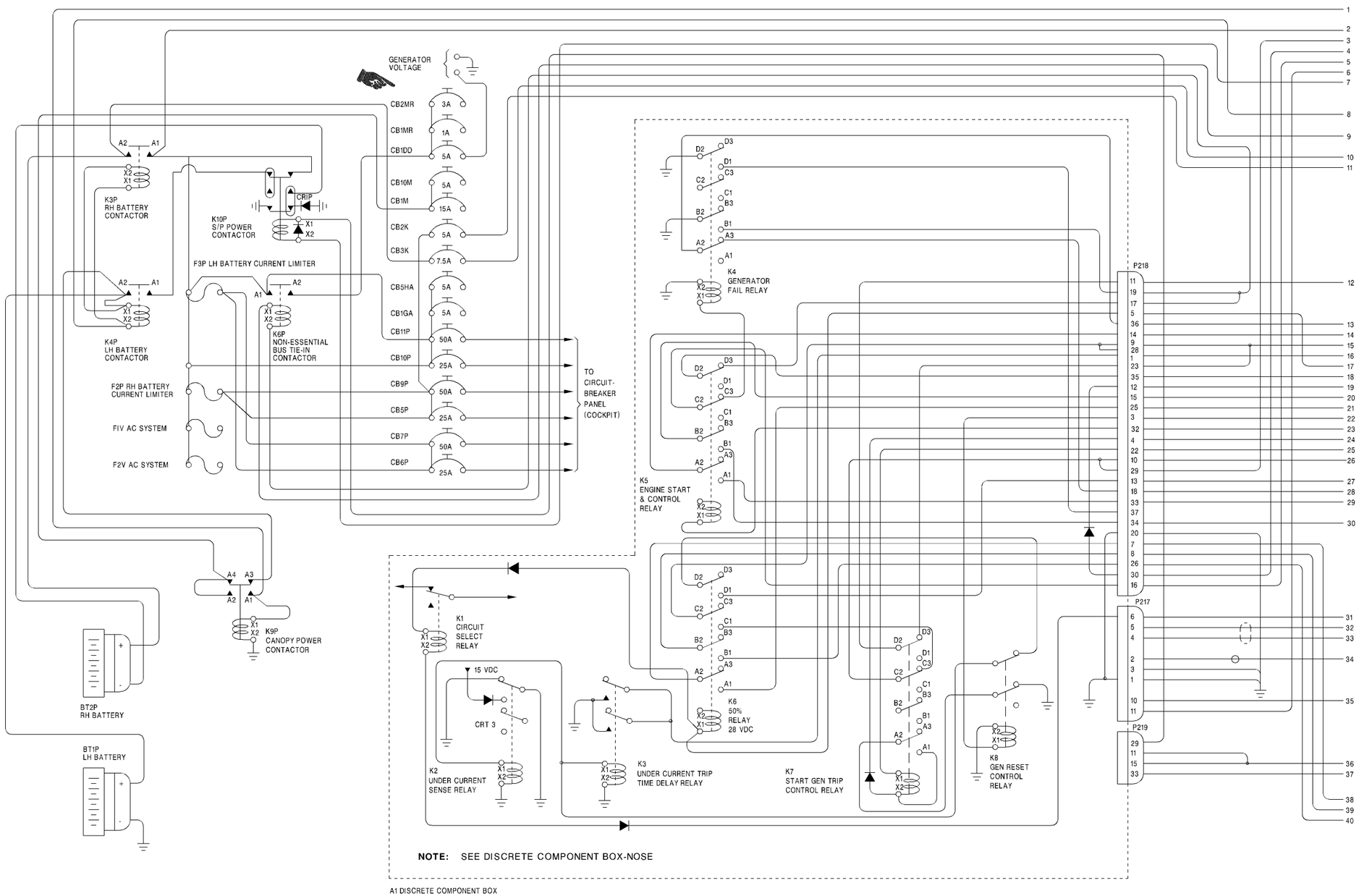

DC Power Supply and Engine Starting – Schematic (Sheet 1 of 3) Figure 2-55

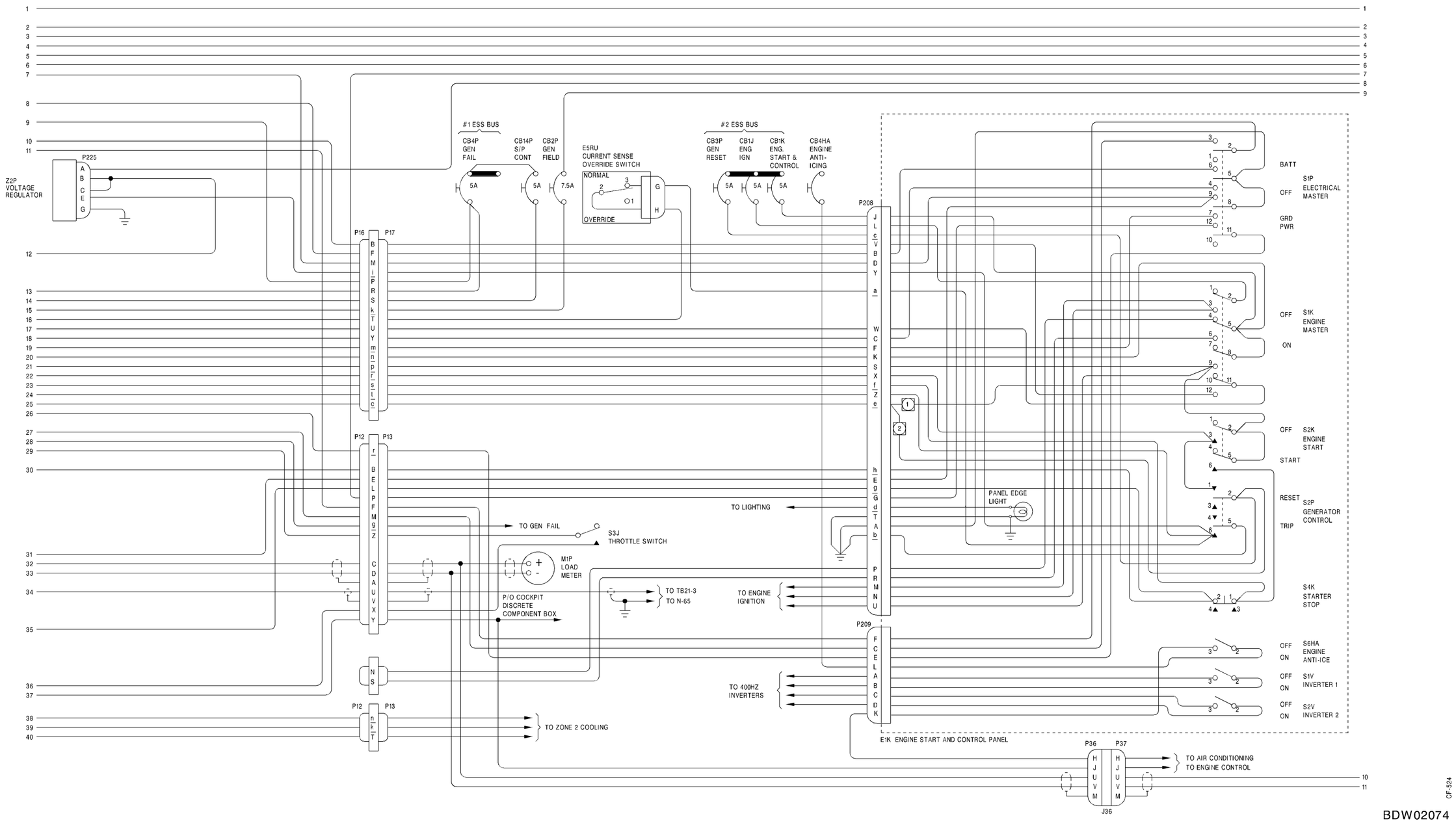

DC Power Supply and Engine Starting – Schematic (Sheet 2 of 3) Figure 2-55

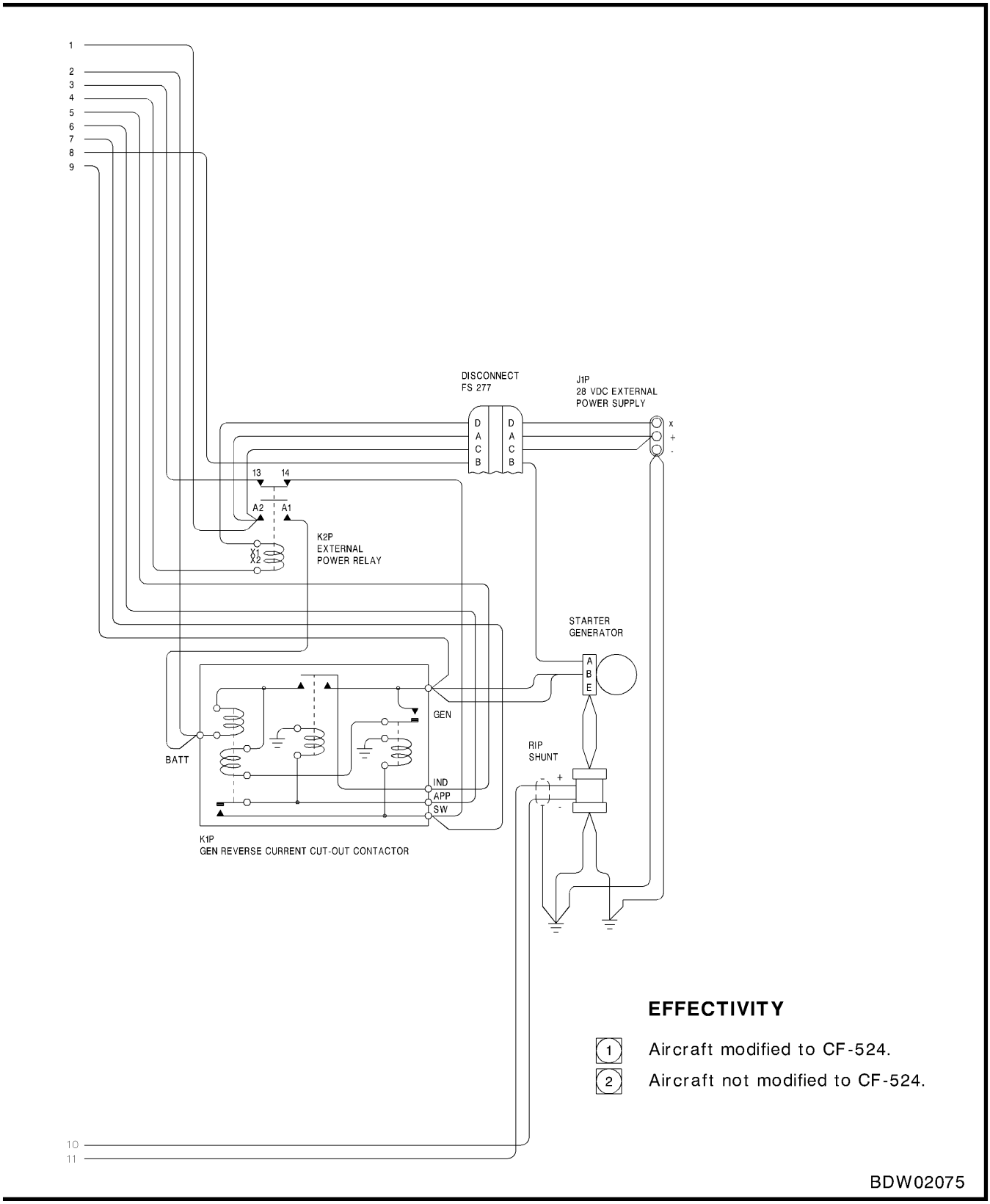

Figure 2-55 (Sheet 3 of 3) DC Power Supply and Engine Starting – Schematic

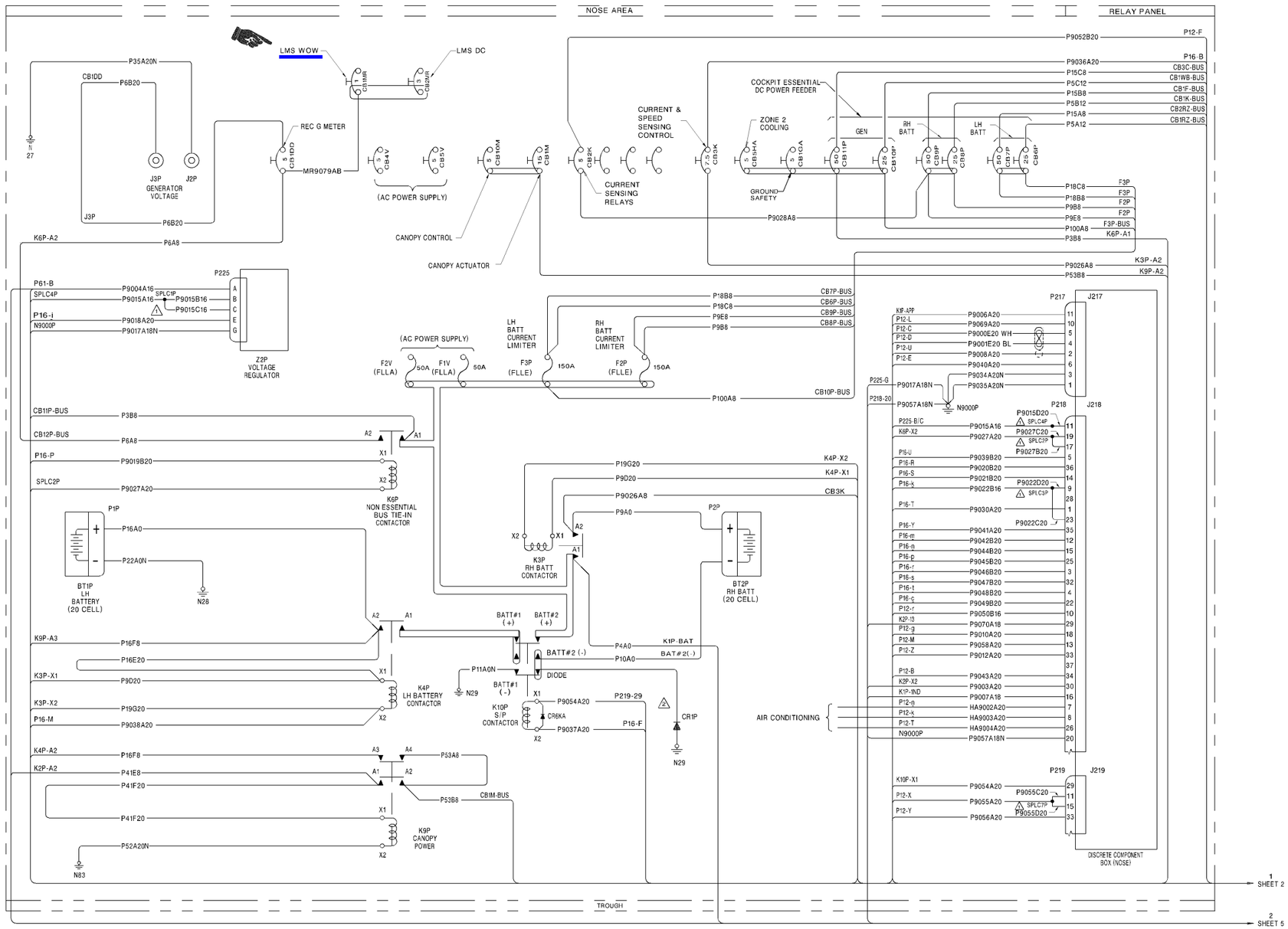

NOTES :

1. ALL SPLICES WITHIN 6 INCHES OF CONNECTOR.
2. WIRE IS PART OF DIODE CR1P.

BDW02076

DC Power Supply and Engine Starting – Wiring (Sheet 1 of 5) Figure 2-56

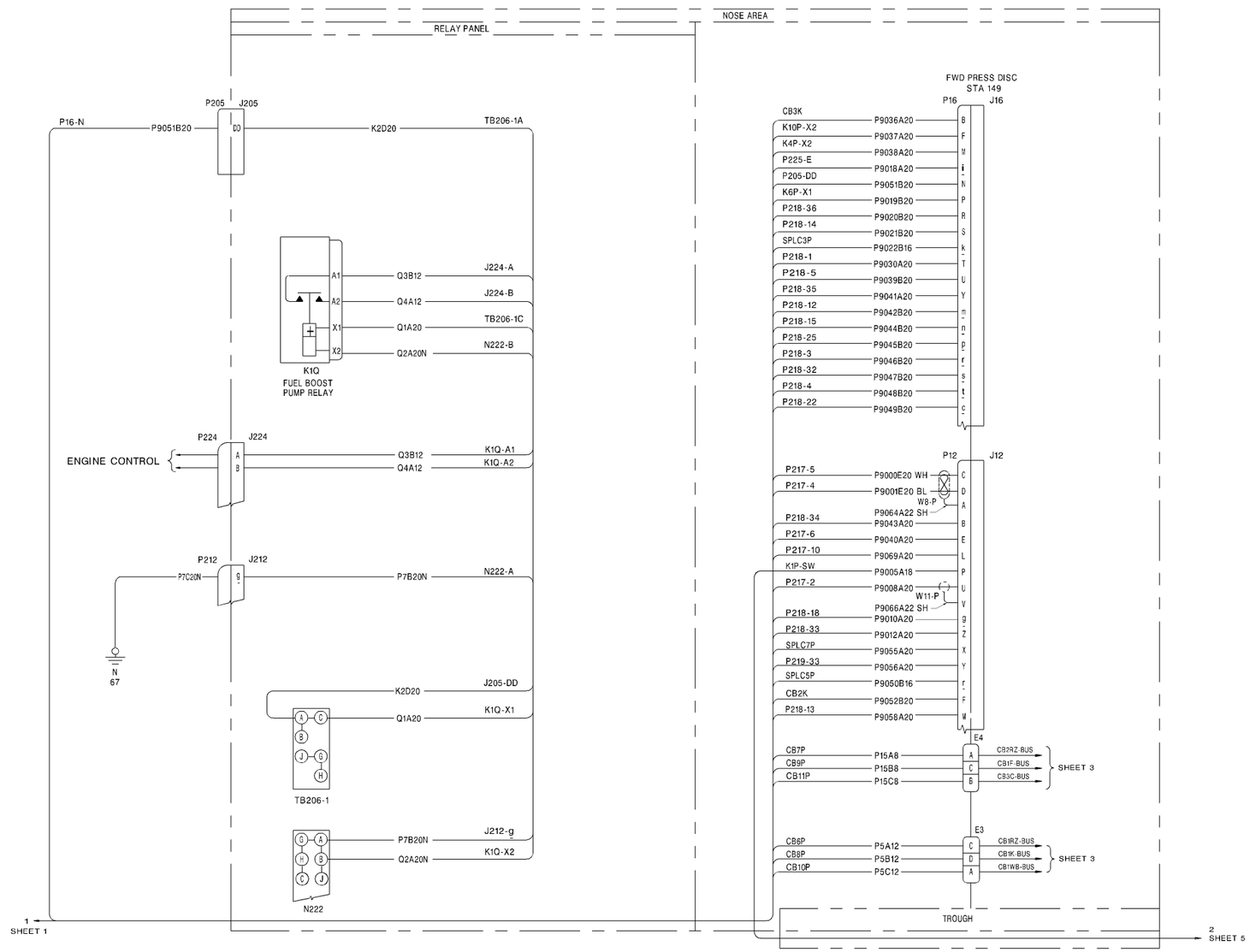

BDW02077

DC Power Supply and Engine Starting – Wiring (Sheet 2 of 5) Figure 2-56

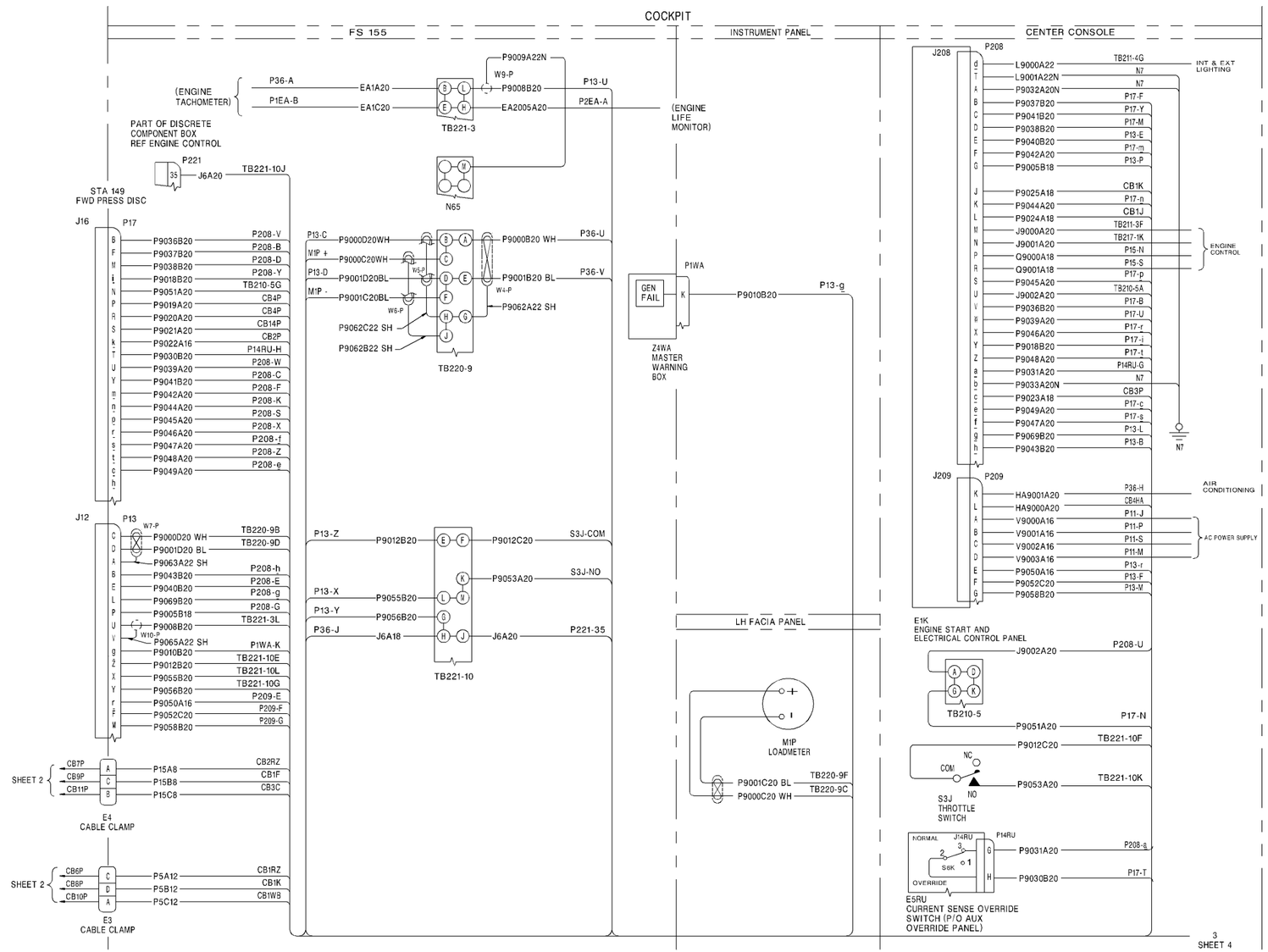

BDW02078

DC Power Supply and Engine Starting – Wiring (Sheet 3 of 5) Figure 2-56

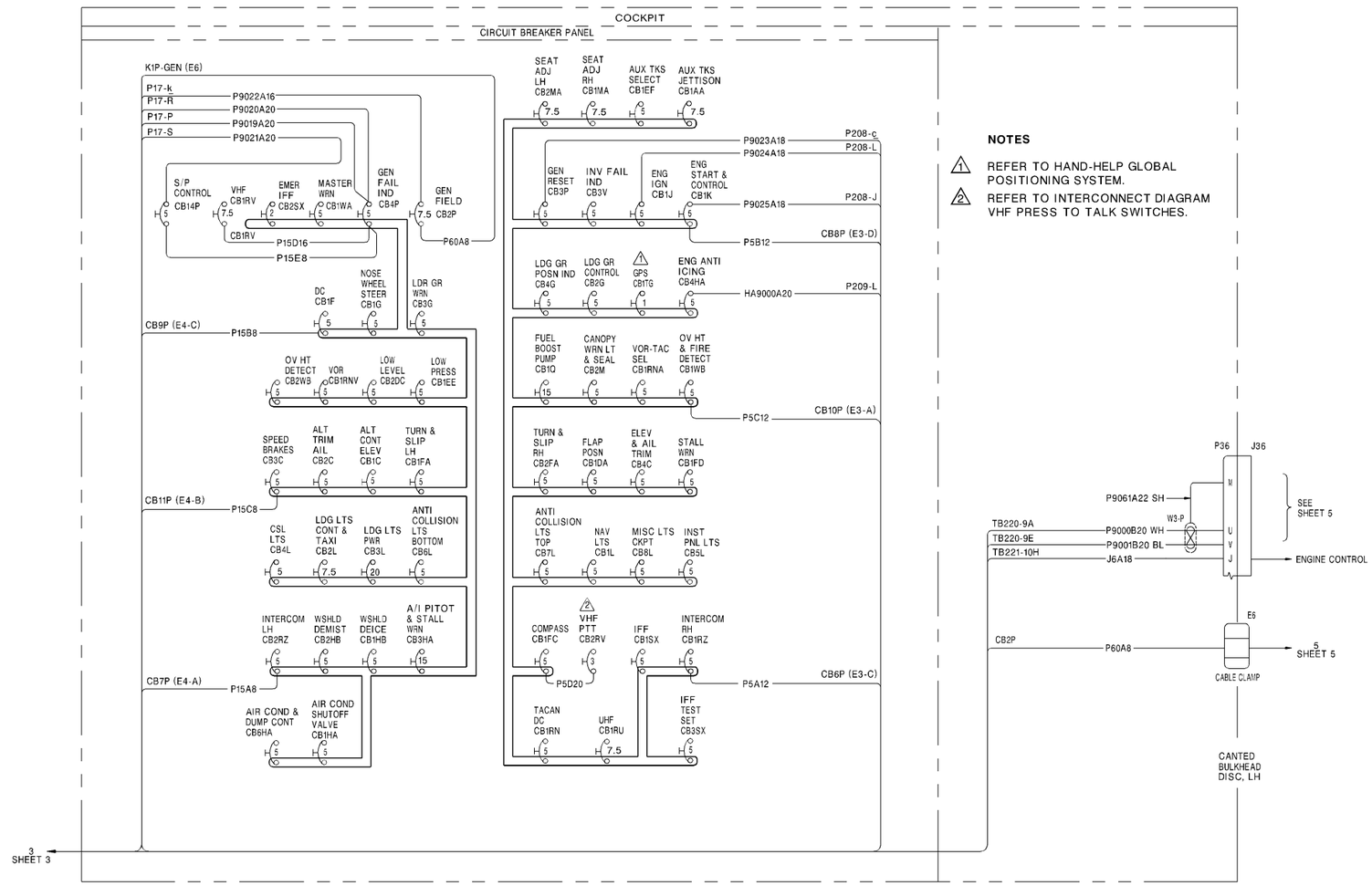

BDW02079

DC Power Supply and Engine Starting – Wiring (Sheet 4 of 5) Figure 2-56

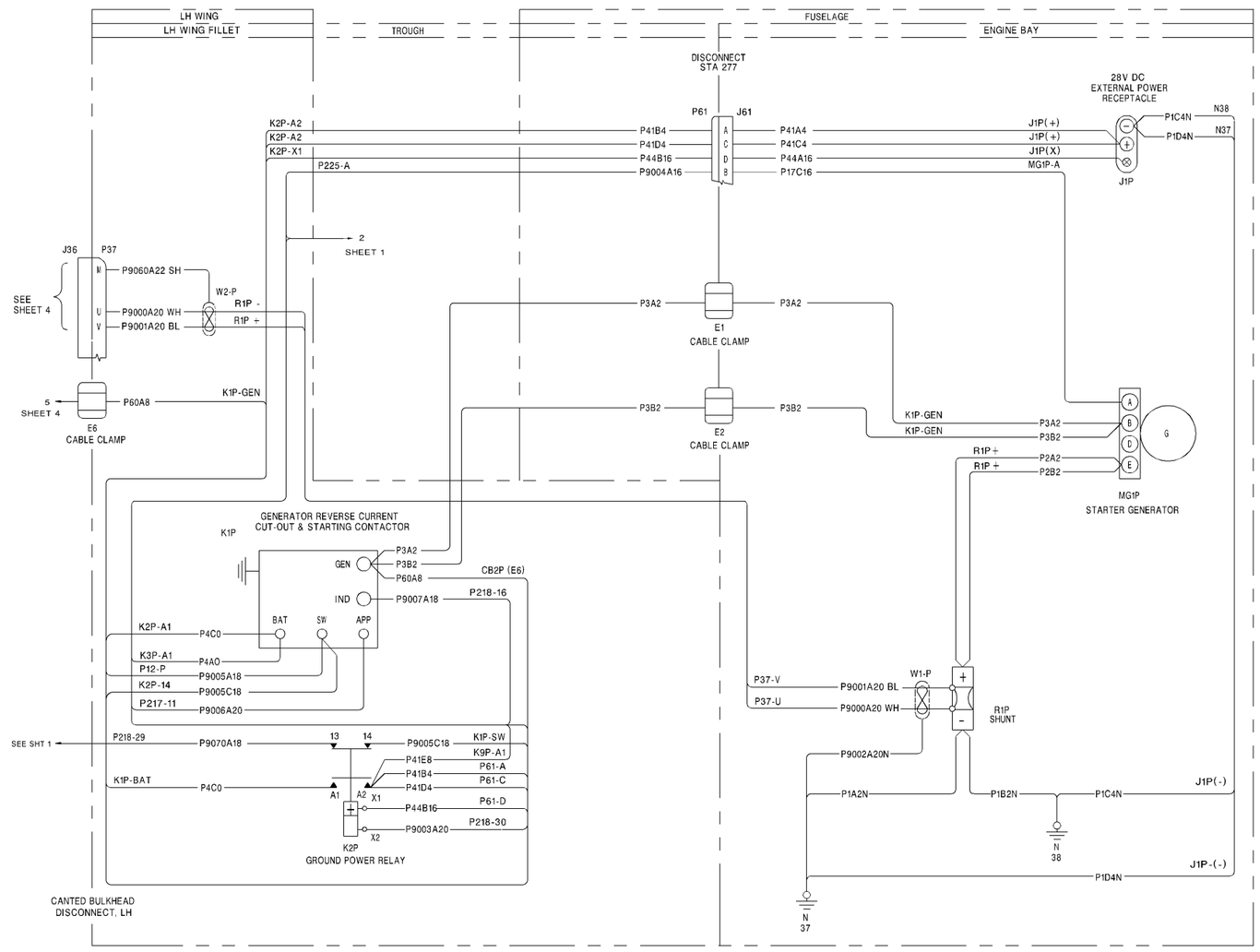

BDW02080

DC Power Supply and Engine Starting – Wiring (Sheet 5 of 5) Figure 2-56

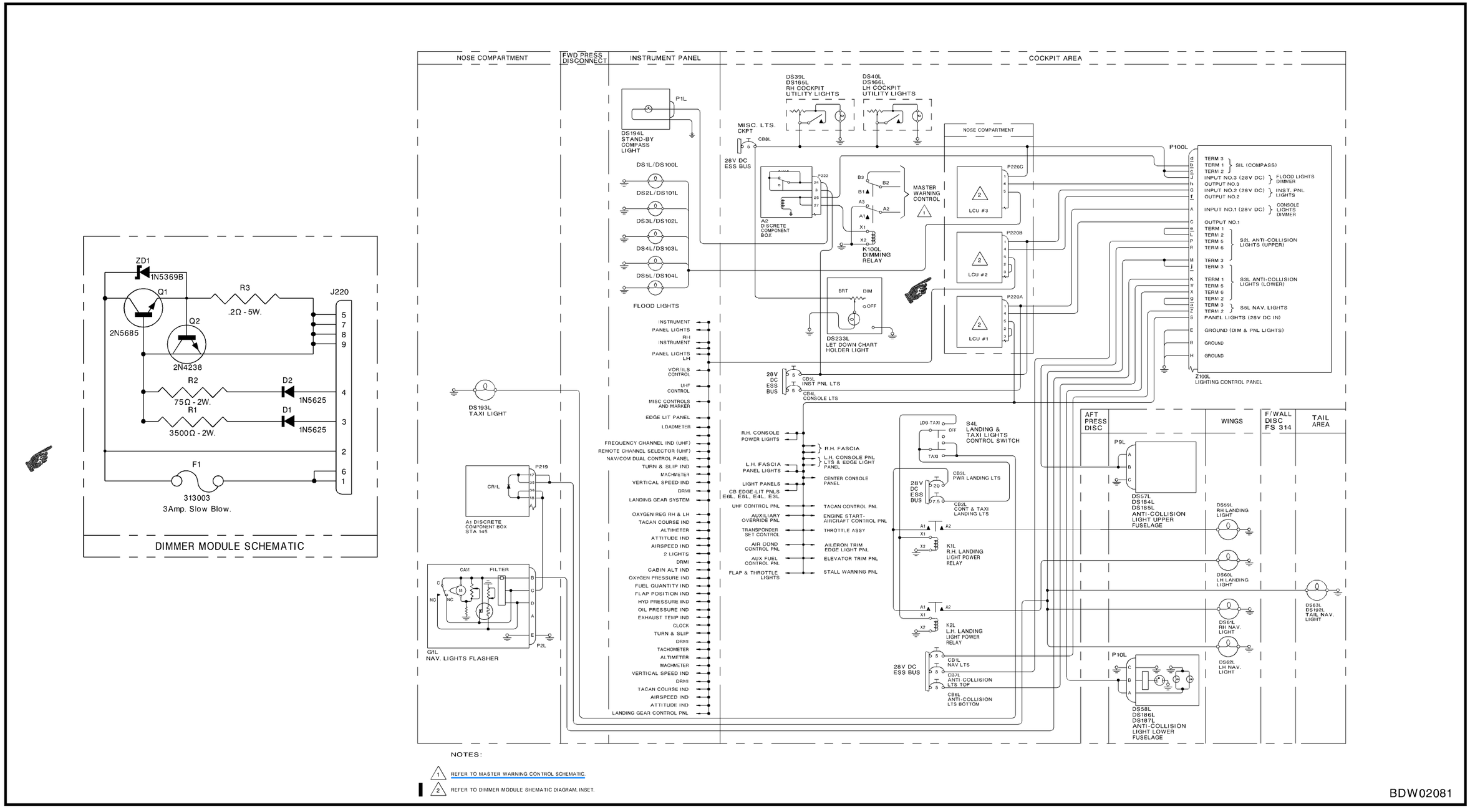

Interior and Exterior Lighting System – Schematic Figure 2-57

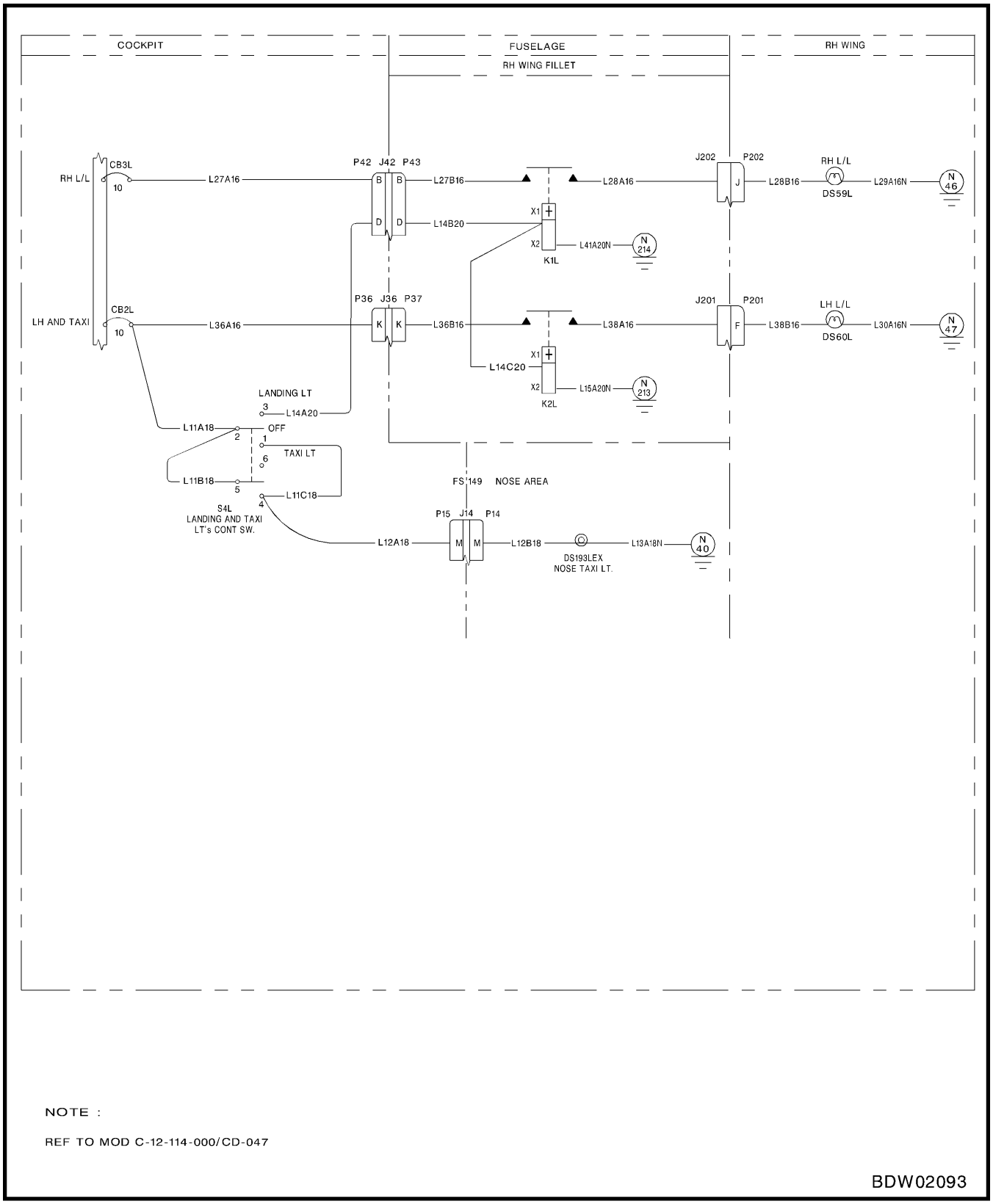

Figure 2-58 Taxi/Landing Lights – Snowbird Aircraft

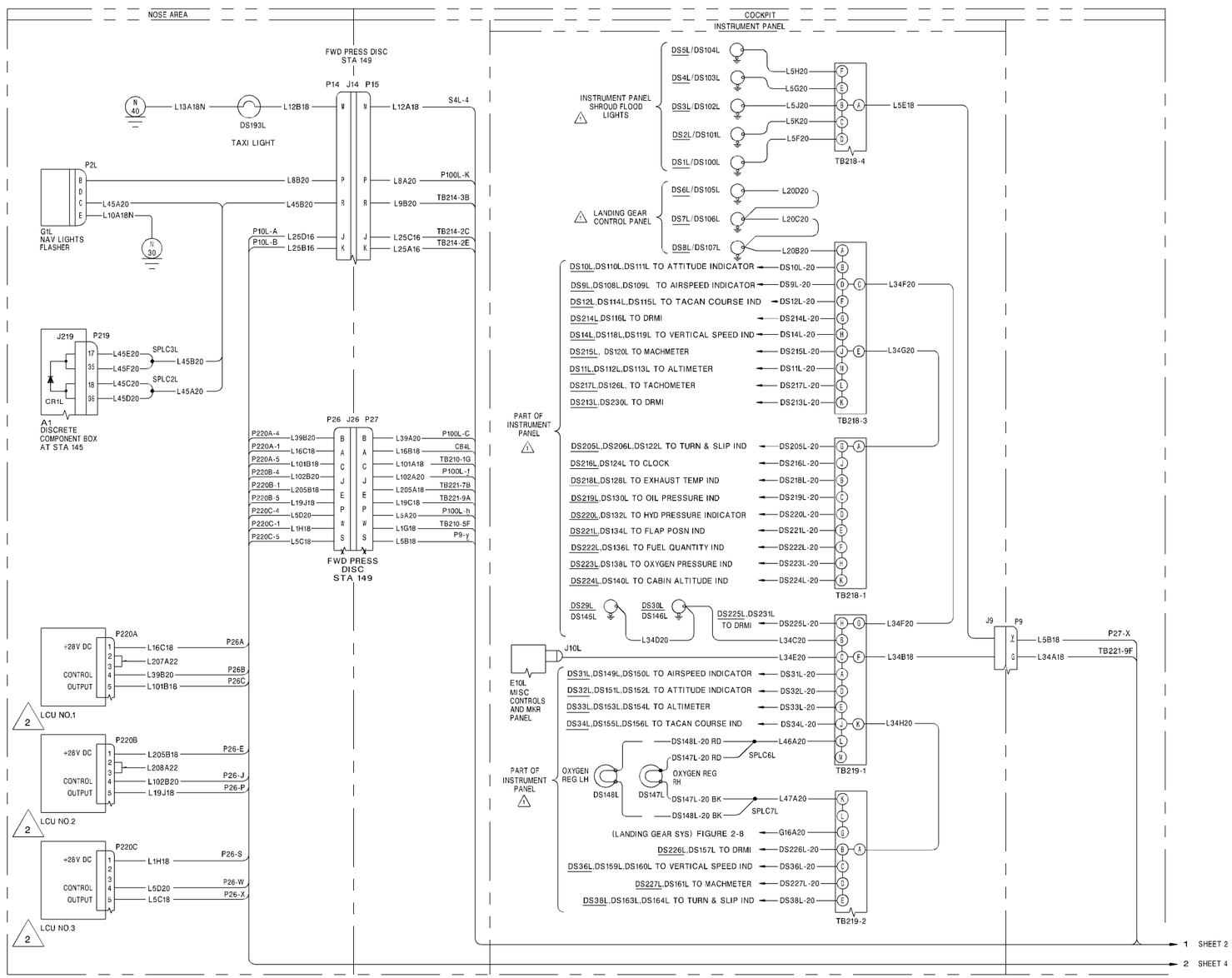

NOTES

1. ALL LIGHT ASSEMBLIES ARE IDENTIFIED WITH UNDERLINE.
2. REFER TO DIMMER MODULE SCHEMATIC DIAGRAM, FIGURE 2-57 INSERT.

BDW02082

Interior and Exterior Lighting System – Wiring (Sheet 1 of 4) Figure 2-59

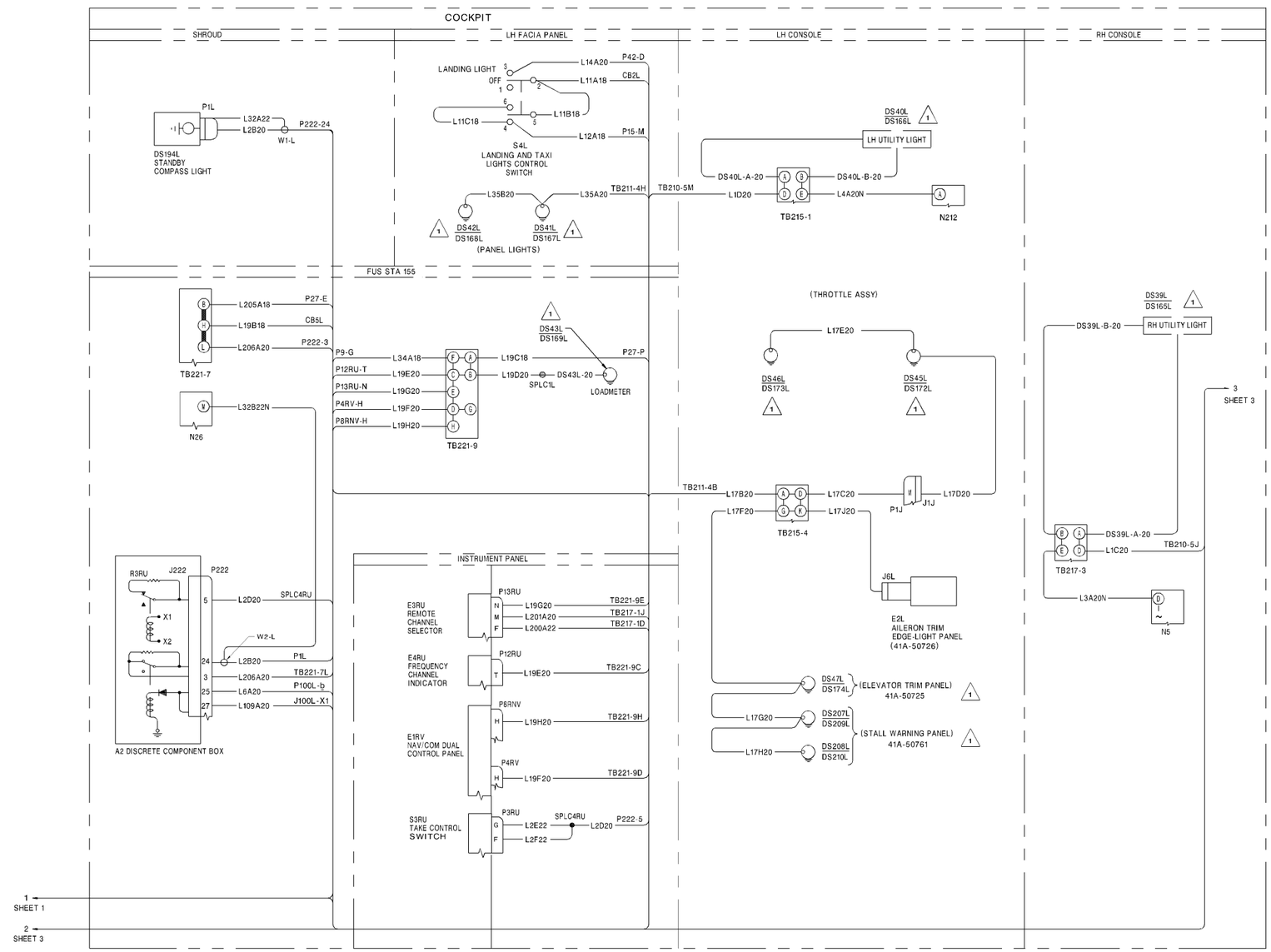

BDW02083

Interior and Exterior Lighting System – Wiring (Sheet 2 of 4) Figure 2-59

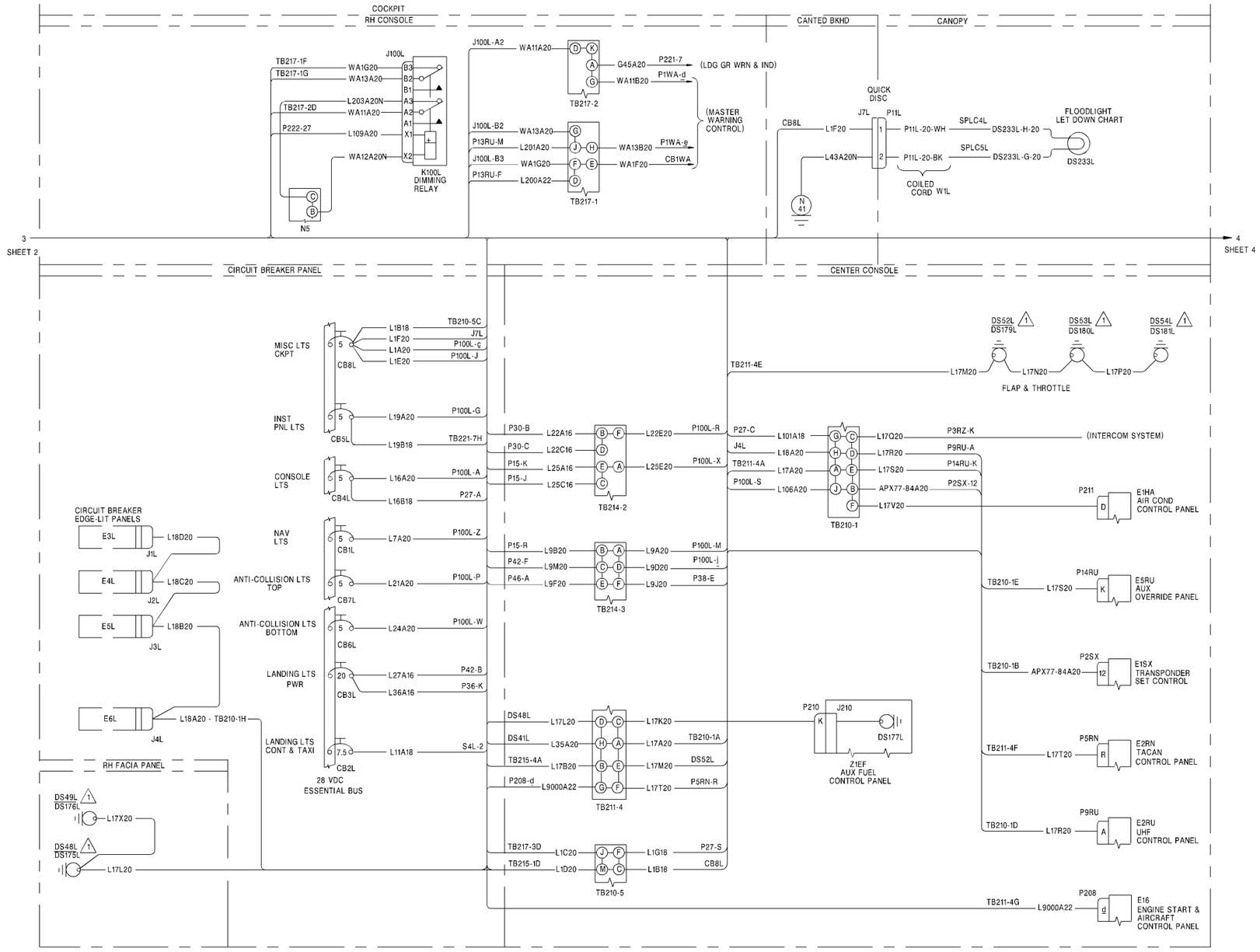

BDW02084

Interior and Exterior Lighting System – Wiring (Sheet 3 of 4) Figure 2-59

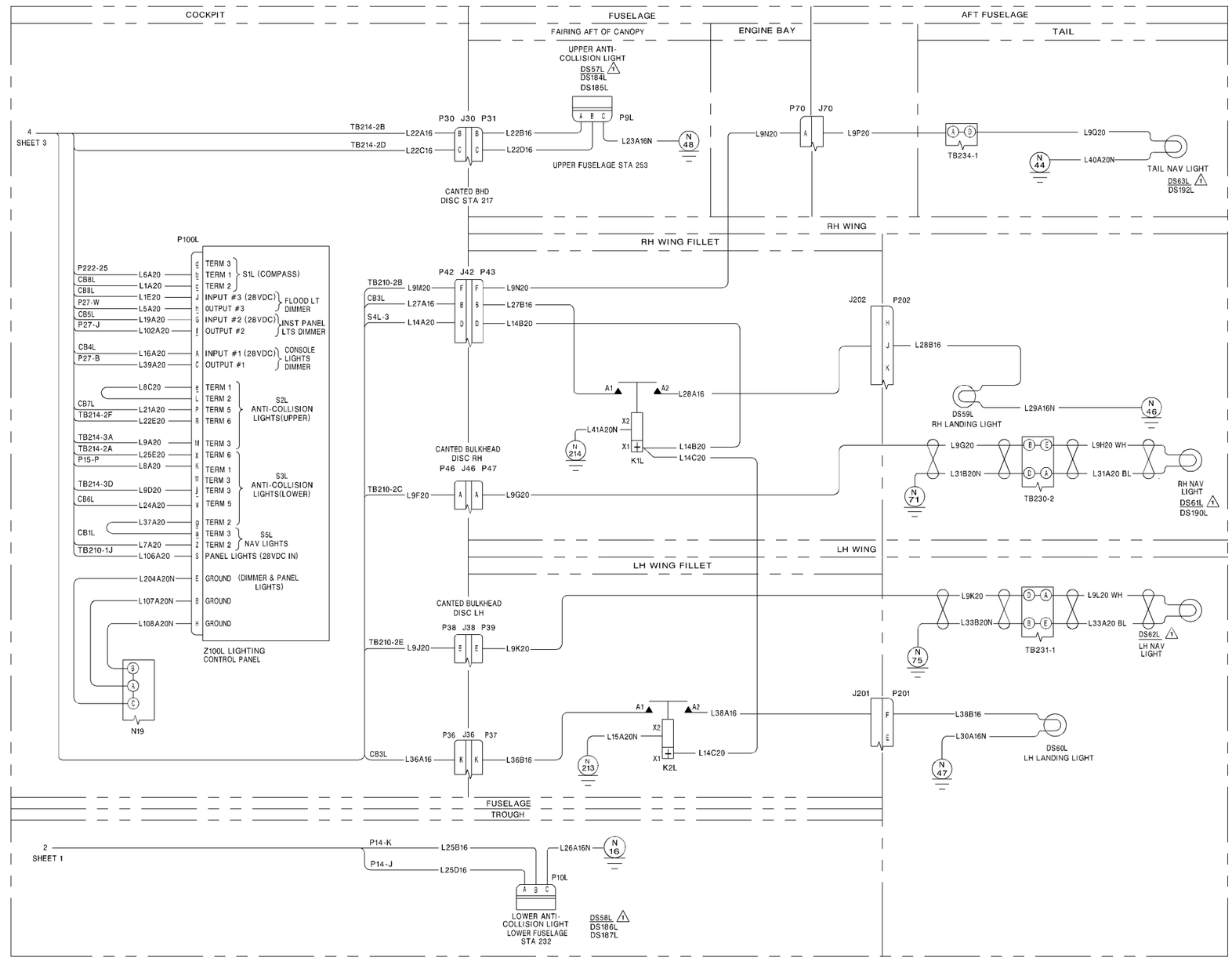

Interior and Exterior Lighting System – Wiring (Sheet 4 of 4) Figure 2-59

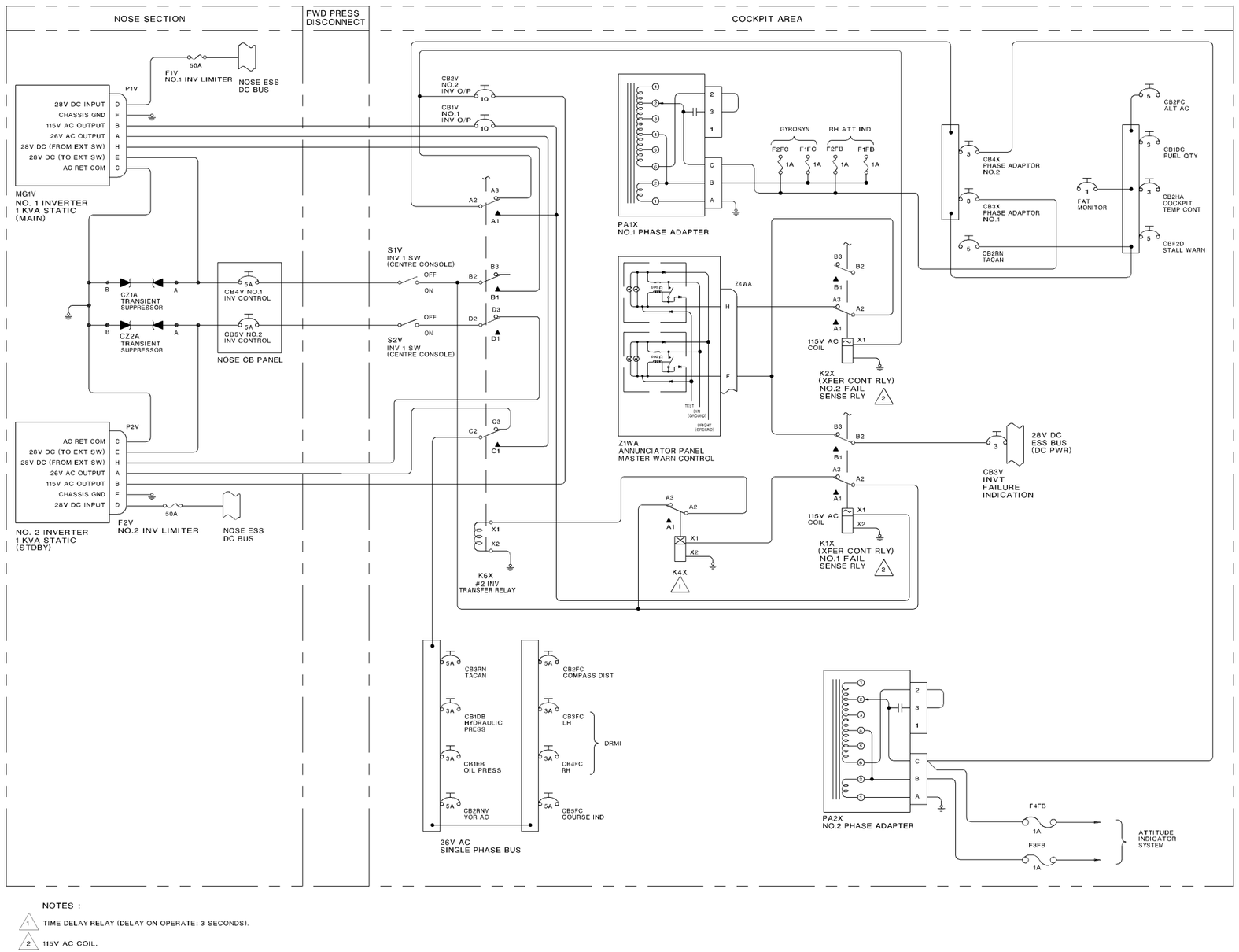

NOTES :

1. TIME DELAY RELAY (DELAY ON OPERATE: 3 SECONDS).
2. 115V AC COIL.

BDW02086

AC Power Supply – Schematic Figure 2-60

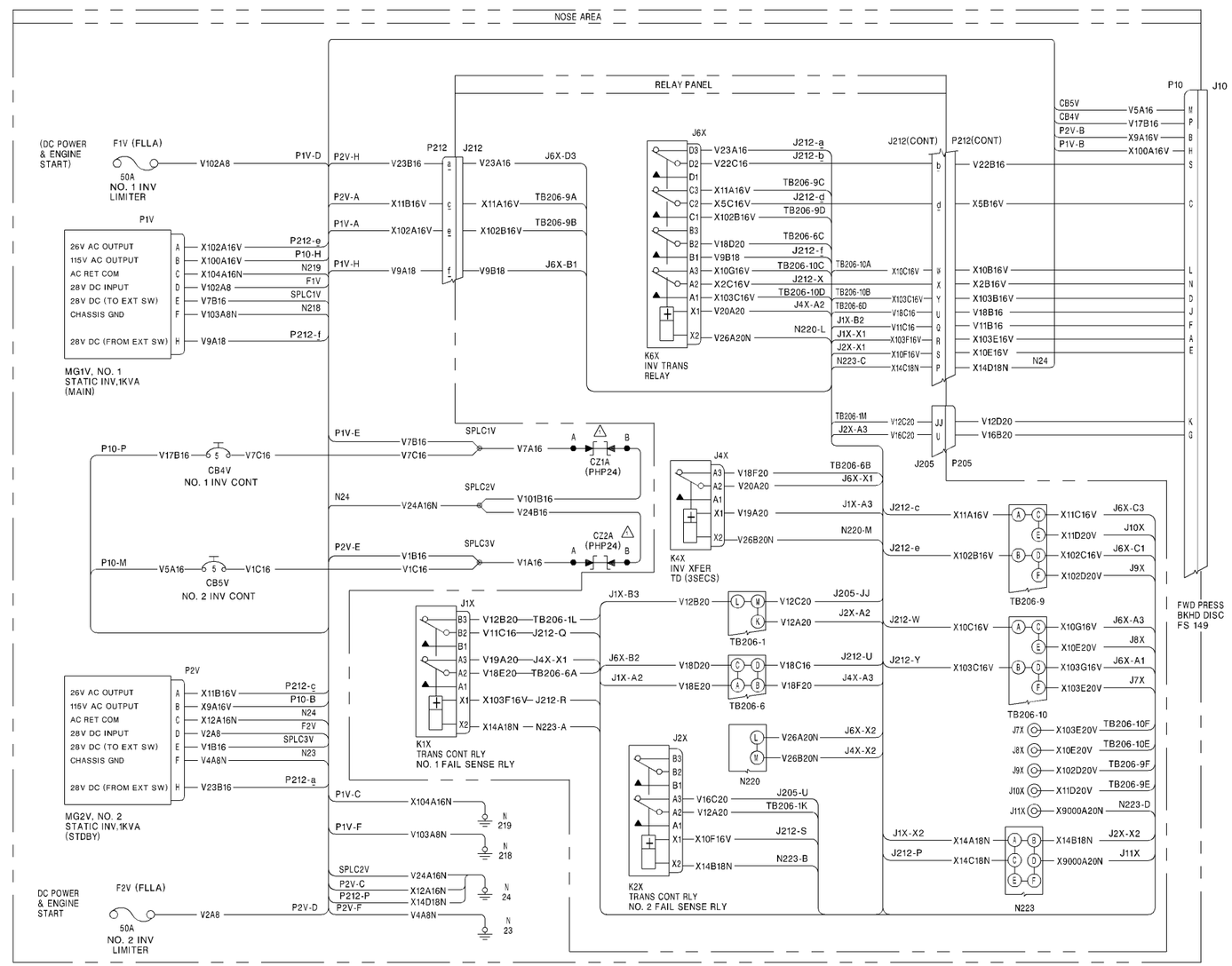

NOTE:

1. SOLDER WIRES TO SUPPRESSION DIODES.

BDW02087

AC Power Supply – Wiring (Sheet 1 of 2) Figure 2-61

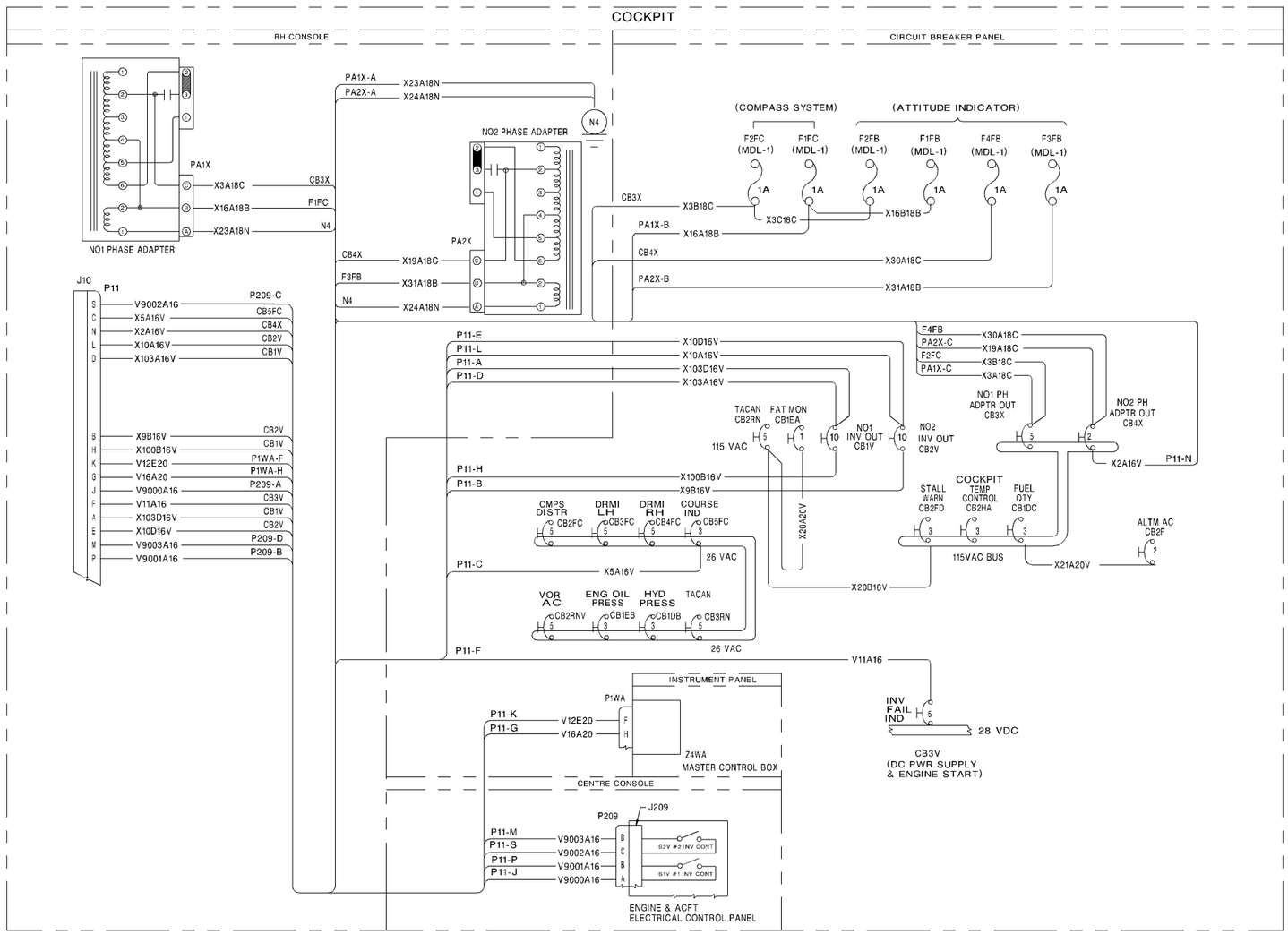

AC Power Supply – Wiring (Sheet 2 of 2) Figure 2-61

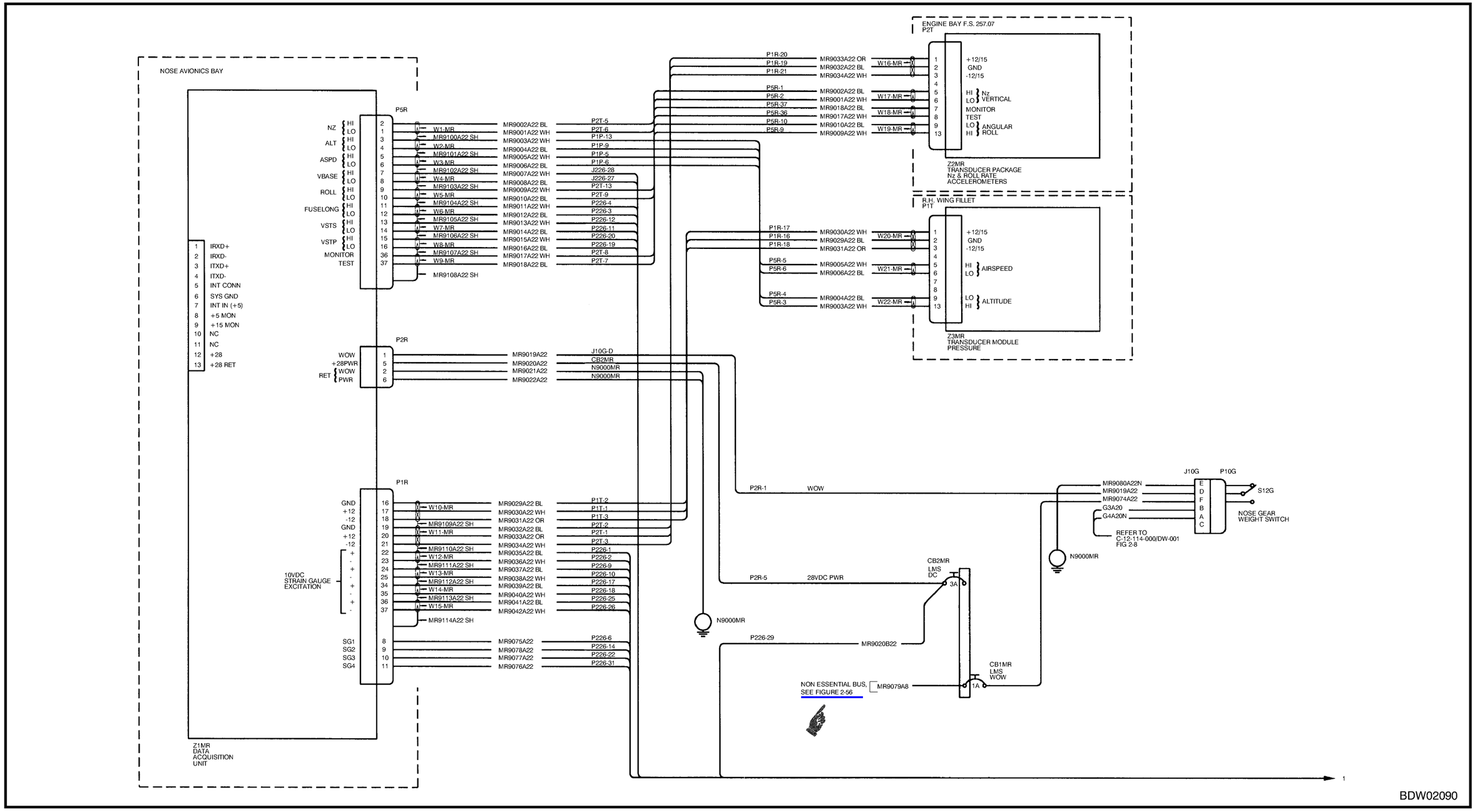

Load Monitoring System – Wiring (Sheet 1 of 2) Figure 2-62

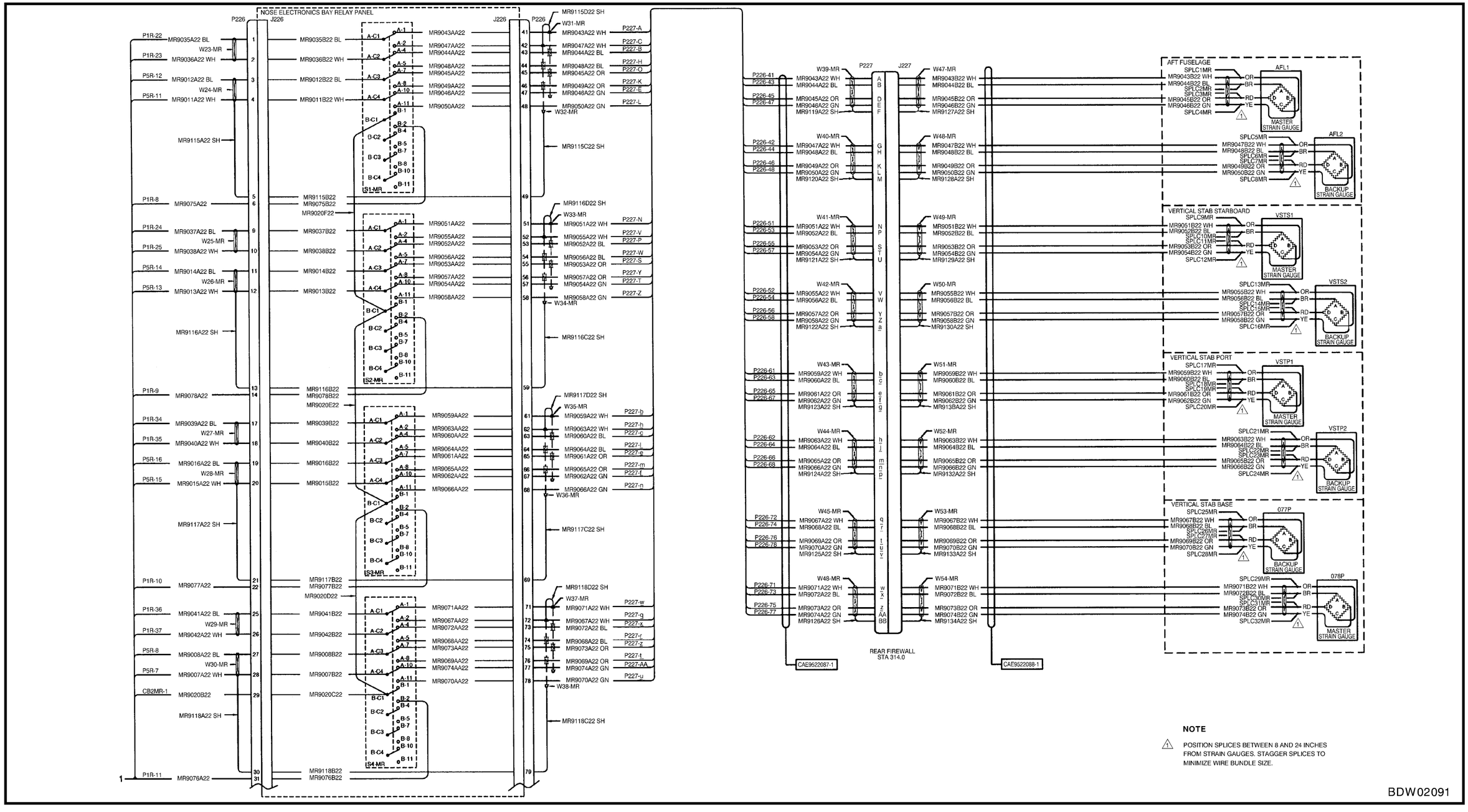

Load Monitoring System – Wiring (Sheet 2 of 2) Figure 2-62

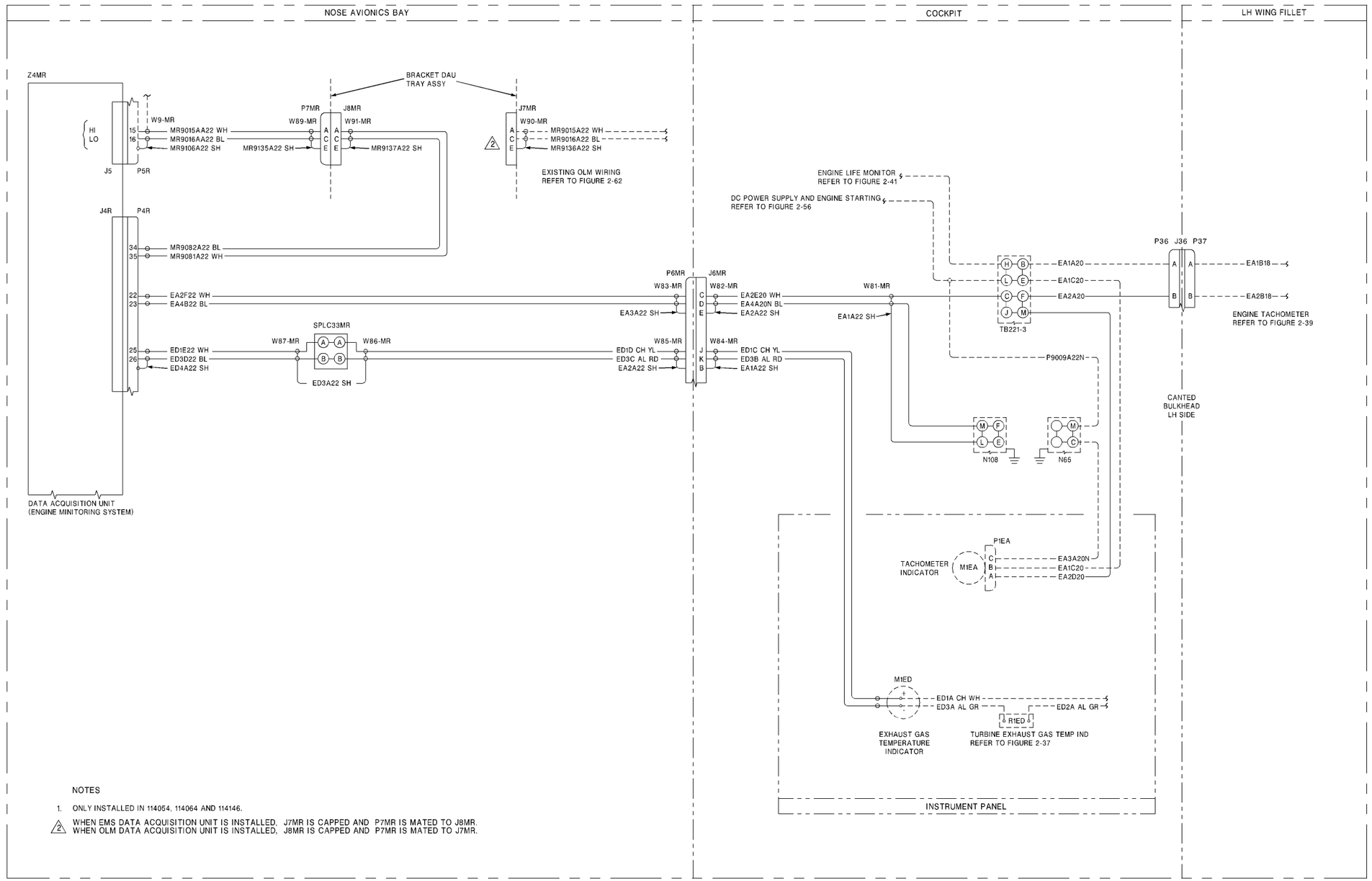

Engine Monitoring System – Wiring Figure 2-63

PART 3

ELECTRONIC WIRING DATA

GENERAL INFORMATION

GENERAL

1. Part 3 of this volume contains schematic diagrams and wiring diagrams of the CT114 Tutor telecommunications systems and an isometric illustration showing the location of system components.

2. For troubleshooting, this Part is in addition to the telecommunication equipment manuals and the aircraft Description and Maintenance Instructions (Telecommunications), C-12-114-0G0/MF-001.

3. See Part 1 for the general view of the aircraft; station diagrams area charts, access panel diagrams, wire identification, and repair and item identification.

SCHEMATICS AND DIAGRAMS

4. The schematics and wiring diagrams are listed by the titles of their respective systems in the List of Figures. The schematic diagrams explain wiring systems that are not found in the equipment manuals and are peculiar to the aircraft installations. The wiring diagrams identify the aircraft installation wiring for the equipment systems.

ELECTRONIC EQUIPMENT LOCATION/ REFERENCE DESIGNATOR LIST

5. The Electronic Equipment Location/Reference Designator List (see Figure 3-1) is separated into two sections. The first section is in table format, giving the following information on all electrical components:

a. Designator number.

b. Brief description and location.

c. Part number.

d. Item number.

The second section is a general view of the aircraft which shows the physical location of a component on the aircraft with the help of item numbers referred to in the first section. Both sections should be used in conjunction with each other.

Designator No.	Description / Location	Part No.	Item No.
A1	Nose Discrete Component Box / Nose	NW4528459-1	26
	PCB Assy / Nose Discrete Component Box	NW4528448-1	26
	PCB Assy / Nose Discrete Component Box	NW4528441-1	26
	Heat Sink Assy / Nose Discrete Component Box	NW4528453-1	26
A2	Cockpit Discrete Component Box / Cockpit	NW4528462-1	24
	PCB Assy / Cockpit Discrete Component Box	NW4528442-1	24
	Heat Sink Assy / Cockpit Discrete Component Box	NW4528447-1	24
	Centre Console C/B Panel / Cockpit	41A-42201	16
	Nose Relay Panel / Nose	41A-90901-2	6
	Relay Panel LH Console / Cockpit	NW4528217-1	18
	Cockpit General Area		17
CB1RN	5A, TACAN Circuit-breaker / Centre Console	MS25244-5	16
CB1RNA	5A, VOR-TACAN Sel Circuit-breaker / Centre Console	MS25244-5	16
CB1RNV	5A, VOR Circuit-breaker / Centre Console	MS25244-5	16
CB1RU	7.5A, UHF Power Circuit-breaker / Centre Console	MS25244-7.5	16
CB1RV	7.5A, VHF Power Circuit-breaker / Centre Console	MS25244-7.5	16
CB1RZ	5A, Intercom RH Circuit-breaker / Centre Console	MS25244-5	16
CB1SX	5A, IFF Power Circuit-breaker / Centre Console	MS25244-5	16
CB1TG	1A, GPS / Centre Console	MS22073-1	16
CB2RN	5A, TACAN Circuit-breaker / Centre Console	MS25244-5	16
CB2RNV	5A, VOR AC Circuit-breaker / Centre Console	MS25244-5	16
CB2RV	3A, VHF PTT / Centre Console	1500-059-3	16
CB2RZ	5A, Intercom LH Circuit-breaker / Centre Console	MS25244-5	16

Figure 3-1 (Sheet 1 of 12) Electronic Equipment Location/Reference Designator List

Designator No.	Description / Location	Part No.	Item No.
CB2SX	2A, Emerg IFF Circuit-breaker / Centre Console	MS22073-2	16
CB3RN	5A, TACAN Circuit-breaker / Centre Console	MS25244-5	16
CB3SX	5A, IFF Test Set Circuit-breaker / Centre Console	MS25244-5	16
CB4FC	5A, DRMI RH Circuit-breaker / Centre Console	MS25244-5	16
CB501*	3A, ADF DC Circuit-breaker/Centre Console	MS3320-3	16
CB502*	3A, ADF AC Circuit-breaker	MS3320-3	16
CR1C	Diode (Flight Controls) / Cockpit Discrete Component Box	JAN1N3612	24
CR1RNA	Diode (VOR/ILS) / Nose Discrete Component Box	JAN1N3613	26
CR1RU	Diode (UHF XMT KEY) / Cockpit Discrete Component Box	JAN1N5625	24
CR1SX	Diode (IFF) / Nose Discrete Component Box	JAN1N5625	26
CR2C	Diode (Flight Controls) / Cockpit Discrete Component Box	JAN1N3612	24
CR2RU	Diode (UHF SW) / Cockpit Discrete Component Box	JAN1N5625	24
CR2SX	Diode (IFF) / Cockpit Discrete Component Box	JAN1N3613	24
CR3SX	Diode (IFF) / Cockpit Discrete Component Box	JAN1N3613	24
CR4C	Diode (Flight Controls) / Cockpit Discrete Component Box	JANTX1N3612	24
CR5C	Diode (Flight Controls) / Cockpit Discrete Component Box	JAN1N3612	24
CR5RU	Diode (UHF) / Cockpit Discrete Component Box	JAN1N3612	24
CR6C	Diode (Flight Controls) / Cockpit Discrete Component Box	JAN1N3612	24
DFA-206A*	ADF Antenna/Lower Fuselage	622-6820-001	50
DFC-206A*	ADF Controller/Centre Console	622-6813-001	47
DFR-206A*	ADF Receiver/Nose Compartment	622-6812-003	52

Figure 3-1 (Sheet 2 of 12) Electronic Equipment Location/Reference Designator List

Designator No.	Description / Location	Part No.	Item No.
DS114L	Bulb (TACAN Course Indicator)	MS25237-327	11
DS115L	Bulb (TACAN Course Indicator) / Cockpit	MS25237-327	14
DS1RNV	Ind Light Assy (WH Marker) / Instr Panel	MS25041-1	22
DS213L	Light Assy (Radio Mag Indicator)	20-0084-1-C	10
DS214L	Light Assy (Radio Mag Indicator)	20-0084-2-C	10
DS225L	Light Assy (Radio Mag Indicator)	20-0084-1-C	12
DS226L	Light Assy (Radio Mag Indicator)	20-0084-2-C	12
DS230L	Bulb (Radio Mag Indicator)	MS25237-327	10
DS2RNV	Ind Light Assy (YL Marker) / Instr Panel	MS25041-4	22
DS5RNV	Lamp (VOR/ILS Marker) / Instr Panel	MS25237-328	22
DS6RNV	Lamp (VOR/ILS Marker) / Instr Panel	MS25237-328	22
E1RNV	VOR/LOC LH Antenna (Right Shown)	AS-5084/ARN508	39
E1RU	UHF Antenna	AT-256A/ARC	49
E1RV	Nav/Comm Dual Control Unit / Instr Panel	522-2447-552	22
E1RZ	Intercom Audio Selector Panel	5071-1-1/AIC-504	45
E1SX	IFF Transponder Set Control Unit / Cockpit	C-6280(P)/APX	44
E2RN	TACAN Control Unit / Cockpit	C-5287/ARN-504(V)	48
E2RNV	VOR/LOC RH Antenna	AS-5084/ARN-508	39
E2RU	UHF Control Unit / Cockpit	706643-802CF004	46
E2RV	VHF Antenna	16-21B	41
E2SX	IFF Antenna	AT741A	7
E3L	CCT Breaker Edgelit Panel	NW4528082-1	16
E3RNA	Marker Antenna	AT-640A/ARN	21

Figure 3-1 (Sheet 3 of 12) Electronic Equipment Location/Reference Designator List

Designator No.	Description / Location	Part No.	Item No.
E3RU	UHF Remote Channel Selector	C5556/ARC-164	15
E4L	CCT Breaker Edgelit Panel	NW4528083-1	16
E4RNV	Glide Slope Antenna	AS5071/ARN	1
E4RU	UHF Frequency Indicator / Instr Panel	1D-1961B/ARC-164(V)	22
E501RN	TACAN Filter, Coaxial	SCH-P51	32
E5L	CCT Breaker Edgelit Panel	NW4528085-1	16
E5RU	Auxiliary Override Panel / Centre Console	41A-22030	16
E6L	CCT Breaker Edgelit Panel	NW4528084-1	16
ES2SX	IFF Transponder Test Set	TS-1843B/APX	27
F1FC	Fuse (Gyrosyn)	MDL-1	16
F2FC	Fuse (Gyrosyn)	MDL-1	16
HY1RNV	Junction, Hybrid (VOR/LOC Antenna)	776-7358-001	40
J14RU	Connector, Receptacle (Auxiliary Override Panel) / Cockpit	MS3470L14-19P	16
J1RN	Socket, Relay (Course Ind, VOR) / Relay Panel LH Console	M12883/44-01	18
J1RNV	Socket, Relay (VOR/TACAN Audio) / Relay Panel LH Console	M12883/41-11	18
J1RU	Connector, Receptacle (UHF Select)	M12883/45-11	14
J1RV	Socket, relay (VHF PTT) / Centre Console	M12883/44-01	16
J1RZ	Connector, Receptacle (LH Seat Disc) / Cockpit	M85723/82R1407N	17
J1SXA	Socket Relay (IFF) / Nose Relay Panel	M12883/44-01	6
J1SXB	Socket Relay (IFF) / Nose Relay Panel	M12883/44-01	6
J1TG	Connector, receptacle (GPS) / Instr Pnl	MS3470L8-33S	22
J2RNV	Jack (RF Disc) / Cockpit	M39012/17-0503	17

Figure 3-1 (Sheet 4 of 12) Electronic Equipment Location/Reference Designator List

Designator No.	Description / Location	Part No.	Item No.
J2RV	Adapter, Connector (BH Disc FS149) / Cockpit	MS3119E20-41	17
J2RZ	Connector, Receptacle (RH Seat Disc) / Cockpit	M83723/82R1407N	17
J2SX	Socket, Relay (IFF Remote I/P Relay) / Nose Relay Panel	M12883/44-01	6
J3RZ	Connector, Receptacle (Intercom LH Seat) / Cockpit	M9177/3-1	17
J4RZ	Connector, Receptacle (Intercom RH Seat) / Cockpit	M9177/3-1	17
J6RNV	Connector, Receptacle / Cockpit	M39012/02/0513	17
K1RN	Relay (Course Ind, VOR) / Relay Panel LH Console	M83536/6-022M	18
K1RNV	Relay (VOR/TACAN Audio) / Relay Panel LH Console	MS27401-27	18
K1RV	Relay (VHF PTT) / Centre Console	M83536/6-022M	16
K1SXA	Relay (Bail-out) / Nose Relay Panel	M83536/6-022M	6
K1SXB	Relay (Bail-out) / Nose Relay Panel	M83536/6-022M	6
K2RN	Relay (No. 2 Course Sel) / Relay Panel LH Console	M83536/6-022M	18
K2SX	Relay (IFF Remote I/P) / Nose Relay Panel	M83536/6-022M	6
M1FC	DRMI Indicator LH	ID5040A/ARN	11
M1RV	VHF Mount	622-1196-001	37
M2FC	Course Indicator LH	MN97HA4WL	14
M3FC	DRMI Indicator RH	ID5040A/ARN	10
M4FC	Course Indicator RH	MN97HA4WL	11
MP1RN	Mounting Base	MT-5154/ARN-504(V)	29
MP1RNV	Mount / VOR/ILS	MT4781/ARN	34
MP1RU	Mount / UHF	MT-4838/ARC-164(V)	3
MX1RN	Adapter / TACAN	MX-5163/ARN-504(V)	30
P101RN	Connector, Coaxial / Rec Ant TAC	UG-59B/U	28

Figure 3-1 (Sheet 5 of 12) Electronic Equipment Location/Reference Designator List

Designator No.	Description / Location	Part No.	Item No.
P101SX	Connector, Coaxial / IFF Antenna	UG-1213/U	7
P102RN	Connector, Coaxial / Coaxial Filter	M39012/16-0502	31
P103RN	Connector, Coaxial / TACAN Control	M39012/16-0502	28
P104RN	90°BNC Connector	M55339/14-00306	28
P105RN	Connector, Coaxial / TACAN Antenna	82-856	19
P107RN	Connector, Coaxial / TACAN Ant Rec	UG-212-C/U	28
P109RU	Connector / UHF R/T Antenna	M39012/05-0501	3
P10RNV	Connector, Plug / VOR/ILS Receiver	634-4193-004	35
P10RU	Connector, Plug UHF Control / Cockpit	MS3476L20-41P	46
P111RU	Adapter, Connector / UHF Transceiver	M55339/03-00267	3
P112RU	Connector, Plug / UHF Antenna	M39012/05/0501	49
P11RNV	Connector, Plug / VOR/ILS Receiver	634-4193-004	35
P12RNV	Connector, Plug / VOR/ILS Receiver	634-4193-004	35
P12RU	Connector, Plug / Frequency Channel Ind	67-06C20-37S	22
P13RNV	Connector, Coaxial / Glide Slope Antenna	M39012/01-0504	1
P13RU	Connector, Plug / Remote Channel Selector	MS3476L18-32S	15
P14RU	Connector, Plug / Freq Override Panel	MS3476L14-19S	16
P1ARV	Connector, Plug / VHF Transceiver	DPX2ME-A40WIS-33B-0203	38
P1BRV	Connector, Plug / VHF Transceiver	DPX2ME-A40WIS-33B-0203	38
P1RNA	Connector, Plug / Rotary Solenoid Switch	MS3476L20-41S	5
P1RNV	Connector, Coaxial / LH VOR/LOC Antenna	M39012/20-0503	39
P1RZ	Connector, Plug / LH Seat Disc / Cockpit	M83723/66R1407N	17
P217	Connector, Plug / Nose Discrete Component Box	DAMA-15S	26

Figure 3-1 (Sheet 6 of 12) Electronic Equipment Location/Reference Designator List

Designator No.	Description / Location	Part No.	Item No.
P218	Connector, Plug / Nose Discrete Component Box	117RR-C37S	26
P219	Connector, Plug / Nose Discrete Component Box	117RR-C37S	26
P221	Connector, Plug / Cockpit Discrete Component Box	DDMA-50S	24
P222	Connector, Plug / Cockpit Discrete Component Box	DCMA-37S	24
P2FC	Connector, Plug / Compass Amplifier	MS3456L20-27S	25
P2RNA	Connector, Plug / Rotary Solenoid Switch	MS3476L20-41SW	5
P2RNV	Connector, Coaxial / VOR/LOC Antenna	M39012/20-0503	39
P2RV	Connector, Plug BH Disc / Cockpit	MS3476L20-41P	17
P2RZ	Connector, Plug RH Seat Disc / Cockpit	M83723/66R1407N	17
P2SX	Connector, Plug / Transponder Set Cont	M83723/75R2255N	44
P3RN	Connector, Plug / TACAN Mount	DPAME-32-33S	29
P3RNA	Connector, Plug / Rotary Solenoid Switch	MS3476L20-41SX	5
P3RNV	Connector, Coaxial / Hybrid Junction	M39012/16-0503	40
P3RU	Connector, Plug BH Disc / Cockpit	18-200	17
P3RV	Connector, Plug BH Disc / Cockpit	MS3476L20-41S	17
P3RZ	Connector, Plug / Audio Selector Panel	MS3476L20/41S	45
P4FC	Connector, Plug / LH DRMI	MS3476L18-32S	12
P4RN	Connector, Plug / TACAN Mount	DPAME32-33S	29
P4RNV	Connector, Coaxial / Hybrid Junction	M39012/16-0503	40
P4RV	Connector, Plug VHF Control Unit / Instr Panel	MS3476L20-41SW	22
P4SX	Connector, Plug / IFF Receiver	DPJM59C10-34A	4
P5101RN	90° BNC Connector	M55339/14-00306	28
P5102RN	Connector, Coaxial TCN Supp Pulse In / TACAN R/T	M39012/16-0502	28
P5103RN	Connector, Coaxial / Coaxial Filter	M39012/17-0502	33

Figure 3-1 (Sheet 7 of 12) Electronic Equipment Location/Reference Designator List

Designator No.	Description / Location	Part No.	Item No.
P5FC	Connector, Plug / LH CDI Indicator	MS3476L28-12S	14
P5RN	Connector, Plug / TACAN Control Unit	M28748/4 D0RS1A	48
P5RNV	Connector, Coaxial / Hybrid Jct VOR/LOC Splitter	M39012/16-0503	40
P5RV	Connector, Plug / VHF Antenna	M39012/16-0503	41
P5SX	Connector, Coaxial / IFF RCVR/XMTR	AVL45-040	4
P6FC	Connector, Plug / RH DMRI Indicator	MS3476L18-32S	10
P6RN	Connector, Shell / TACAN Mount	DPA20756-1	29
P6RNV	Connector, Coaxial / Rear Fuselage Disconnect STA 308	M39012/01-0501	39
P6SX	Connector, Coaxial / Transponder Test Set	AVL45-040	27
P7FC	Connector, Plug / RH CDI Indicator	MS3476L28-12S	11
P7RN	Connector, Shell / TACAN Mount	DPA20746-1	29
P7RNV	Connector, Coaxial / Marker Antenna	KD-59-67	21
P7RU	Connector, Plug / UHF Transceiver	MS27473T18F-32S	3
P7SX	Connector, Coaxial / Transponder Test Set	M39012/05-0501	27
P800A*	Connector/ADF Receiver	MS3476L22-55S	52
P801A*	Connector/ADF Antenna	MS3476L12-10S	50
P802A*	Connector/BH Disc Cockpit	MS3476L16-26P	17
P803A*	Connector/BH Disc Cockpit	MS3476L16-26S	17
P804A*	Connector/BH Disc Cockpit	MS3119E16-26	17
P805A*	Connector/ADF Controller	M24308/2-3	47
P8RNV	Connector, Plug Dual Control Panel / Instr Panel	MS3476L20-41S	22
P8SX	Connector, Plug / IFF Test Set	M83723/75R-1212N	27
P9RNV	Connector, Coaxial VOR/LOC / Cockpit	M39012/01-0501	17
P9RU	Connector, Plug UHF Control Box / Cockpit	MS3476L20-41S	46

Figure 3-1 (Sheet 8 of 12) Electronic Equipment Location/Reference Designator List

Designator No.	Description / Location	Part No.	Item No.
Q1RU	Transistor / Cockpit Discrete Component Box	JAN4N33	24
Q2RU	Transistor / Cockpit Discrete Component Box	2N2222A	24
R101RN	Resistor / Nose Discrete Component Box	RCR32G222JS	26
R102RN	Resistor / Cockpit Discrete Component Box	RCR32G681JS	24
R103RN	Resistor / Cockpit Discrete Component Box	RCR32G561JS	24
R10RNV	Resistor / Cockpit Discrete Component Box	R32G331JS	24
R12RNV	Resistor / Cockpit Discrete Component Box	RCR32G471JS	24
R13RNV	Resistor / Cockpit Discrete Component Box	RCR32G471JS	24
R1G	Resistor / Cockpit Discrete Component Box	RER70F15R8R	24
R1RN	TACAN Antenna / Dorsal Centre Line	AT-741/A	19
R1RNV	Resistor / Nose Discrete Component Box	RCR32G331JS	26
R1RU	Resistor / Cockpit Discrete Component Box	RCR32G162JS	24
R2G	Resistor / Cockpit Discrete Component Box	RER75F40R2R	24
R2RNV	Resistor / Nose Discrete Component Box	RCR32G561JS	26
R2RU	Resistor / Cockpit Discrete Component Box	RCR32G431JS	24
R2RZ*	Resistor/Cockpit Discrete Component box	RN60D4750F	24
R3G	Resistor / Cockpit Discrete Component Box	RER70F15R8R	24
R3RNV	Resistor / Nose Discrete Component Box	RCR32G331JS	26
R3RZ*	Resistor/Cockpit Discrete Component Box	RN60D4750F	24
R4RNV	Resistor / Nose Discrete Component Box	RCR32G561JS	26
R4RZ	Resistor / Cockpit Discrete Component Box	RCR32G121JS	24
R4WB	Resistor / Nose Discrete Component Box	RWR84S49R9BR	26
R5RNV	Resistor / Nose Discrete Component Box	RCR32GF561S	26
R5RZ	Resistor / Cockpit Discrete Component Box	RCR32G221JS	24

Figure 3-1 (Sheet 9 of 12) Electronic Equipment Location/Reference Designator List

Designator No.	Description / Location	Part No.	Item No.
R5WB	Resistor / Nose Discrete Component Box	RWR89S1761FR	26
R6RNV	Resistor, 560 OHM / Nose Discrete Component Box	RCR32GF561L	26
R7L	Resistor / Cockpit Discrete Component Box	RWR89S6980FR	24
R7RNV	Resistor / Nose Discrete Component Box	RCR32G561JS	26
R8RNV	Resistor / Nose Discrete Component Box	RCR32G561JS	26
R9RNV	Resistor / Nose Discrete Component Box	RCR32G151JS	26
RE1RNV	VOR/ILS Receiver	R-5069-ARN-508	35
RETR1RN	TACAN Transceiver	RT-5036/ARN-504(V)	28
RETR1RU	UHF Main Transceiver	RT-5078/ARC-164	3
RETR1RV	VHF Receiver/Transmitter	RT-5048.ARC-511(V)	38
RETR1SX	Transponder Receiver/Transmitter	RT-862A/APX-77	4
S1RN	Course SEL Switch/Instr Panel	MS24523-23	22
S1RNA	Rotary Solenoid Switch/Nose	172934-001	5
S1RNV	Marker Sens Switch/Instr Panel	MS25201-7	22
S1RZ	Press-to-talk Switch/LH Seat Throttle	MS25089-4B	20
S2MA	RH Seat Adjustment SW Switch/Cockpit	MS35058-27	17
S2RU	Seat Eject Test Switch/Nose Test Panel	MS35059-30	2
S2RZ	Press-to-talk Switch/ RH Seat Throttle	MS25089-4B	43
S2SX	LH Seat Bail-out Switch/Cockpit	ADD3721R12	17
S4RU	Preset Freq Read Switch/Instr Panel	MS25089-3C	22
S5RZ	Audio Muting Switch/Cockpit RH Facia Panel	MS25089-4B	17
TB201	Rack Mounting	SJT504504	36
TB201-1	Terminal Junction	M81714/60-20-04	36
TB220-12	Terminal Junction	M81714/60-20-03	8

Figure 3-1 (Sheet 10 of 12) Electronic Equipment Location/Reference Designator List

Designator No.	Description / Location	Part No.	Item No.
TB220-13*	Terminal Junction	M81714/60-20-03	8
TB221-13*	Terminal Junction	M81714/60-20-04	23
TB235*	Track Mounting/ADF Receiver Area	M81714/67-03	51
TB235-1*	Terminal Junction	M81714/60-22-01	51
TB235-2*	Terminal Junction	M81714/60-22-05	51
	* Installed on aircraft modified with C-12-114-000/CD-046		

Figure 3-1 (Sheet 11 of 12) Electronic Equipment Location/Reference Designator List

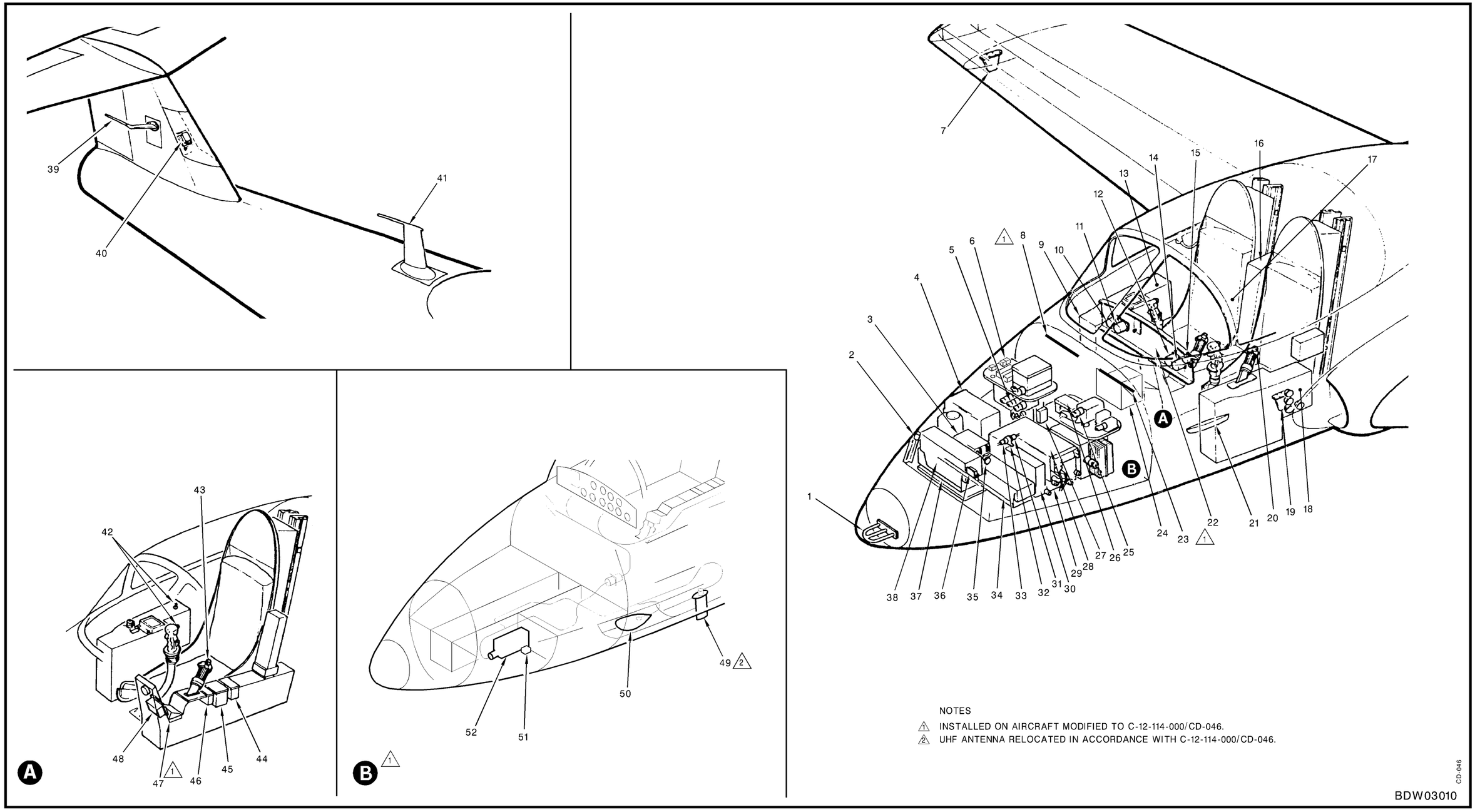

Electronic Equipment Location/Reference Designator List (Sheet 12 of 12) Figure 3-1

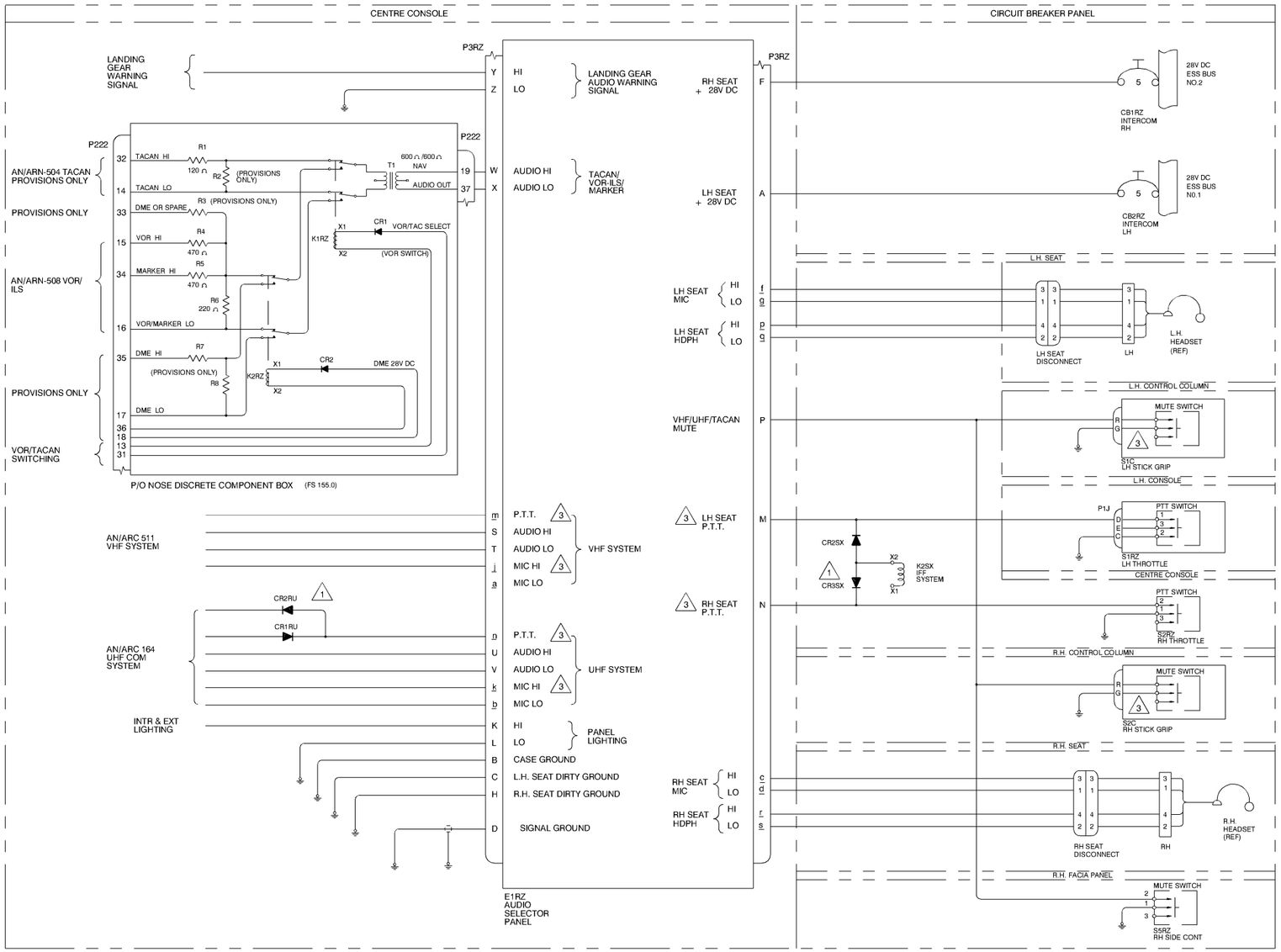

NOTES

1. LOCATED IN DISCRETE COMPONENT BOX A2 (FS 155).
2. REFER TO COCKPIT DISCRETE COMPONENT BOX, INTERCOM SYSTEM.
3. REFER TO INTERCONNECT DIAGRAM VHF PRESS TO TALK SWITCHES.

BDW03011

Intercom System – Schematic Figure 3-2

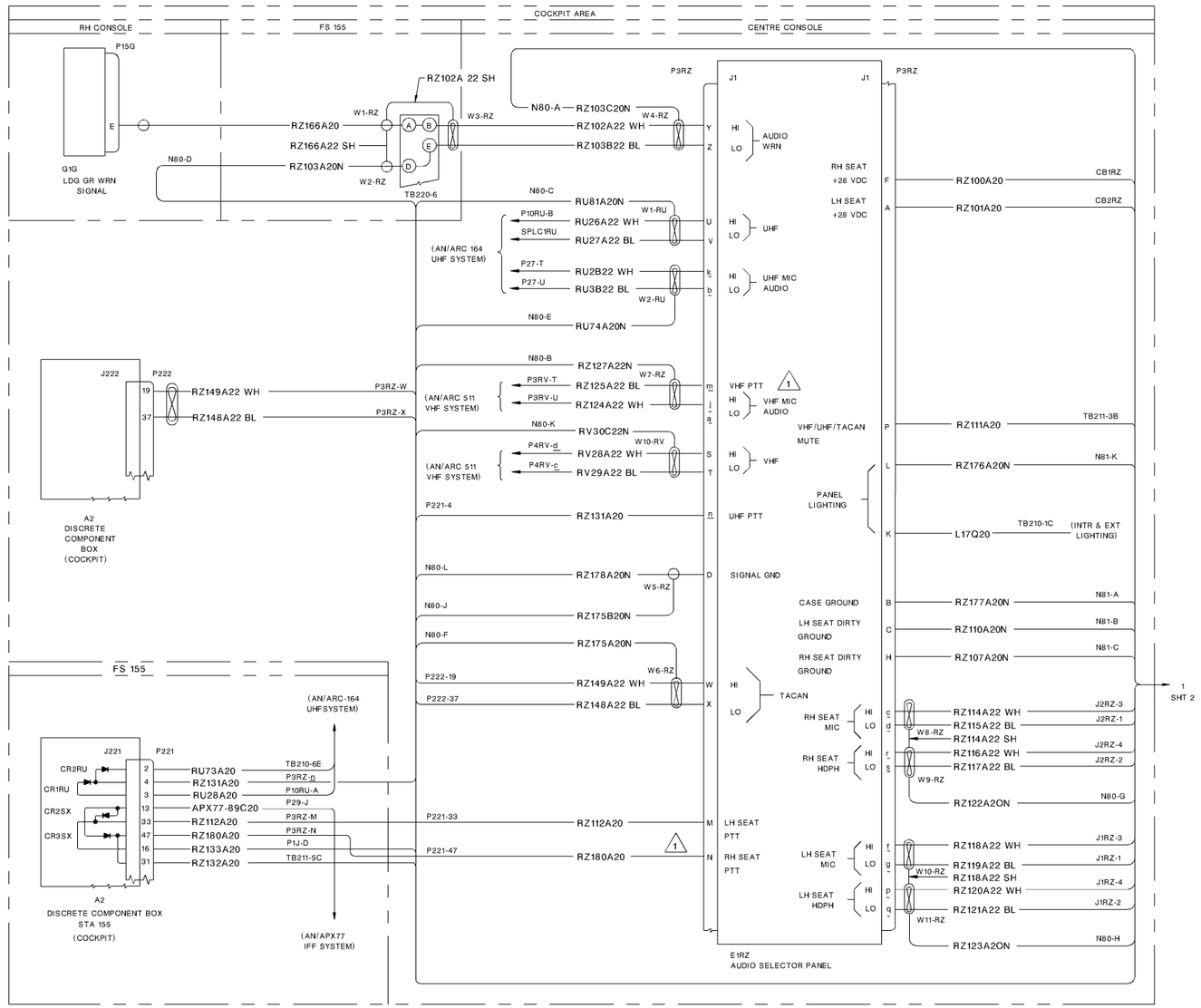

BDW03012

Intercom System – Wiring (Sheet 1 of 2) Figure 3-3

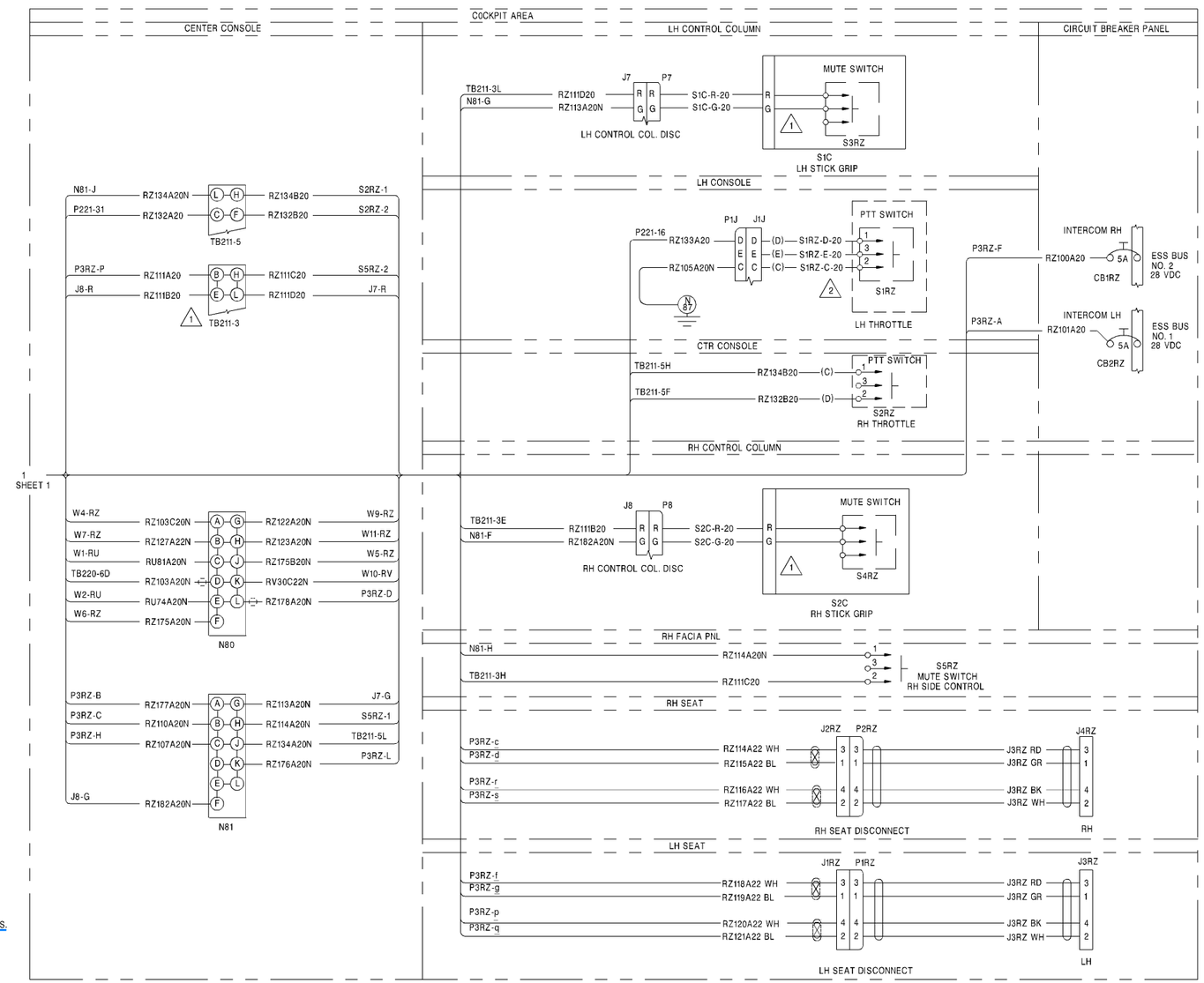

NOTES

1. REFER TO INTERCONNECT DIAGRAM VHF PRESS TO TALK SWITCHES.
2. FOR THROTTLE ASSEMBLY REPLACEMENT, REFER TO THROTTLE ASSEMBLIES - WIRING.

BDW03013

Intercom System – Wiring (Sheet 2 of 2) Figure 3-3

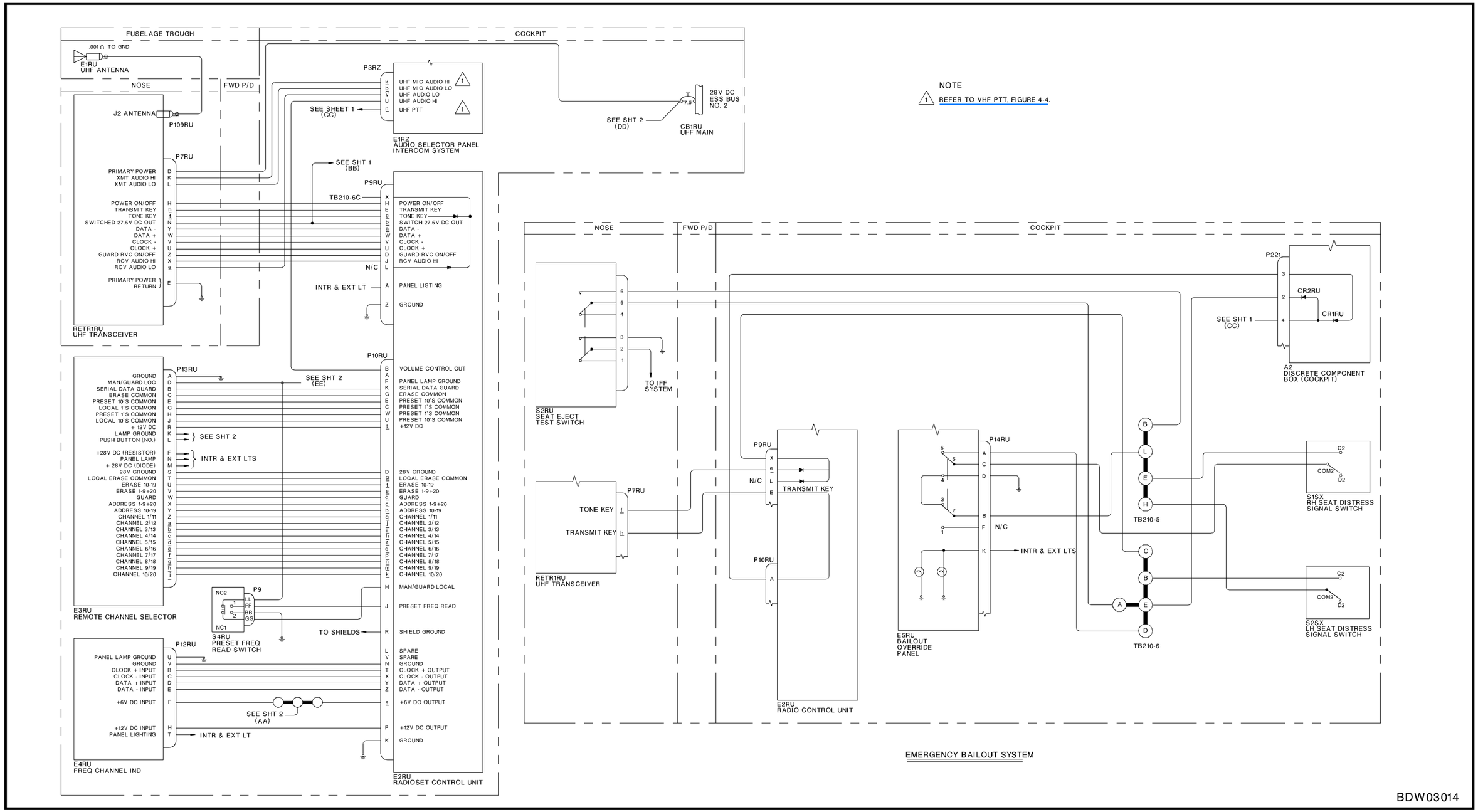

AN/ARC-164 UHF System – Schematic (Sheet 1 of 2) Figure 3-4

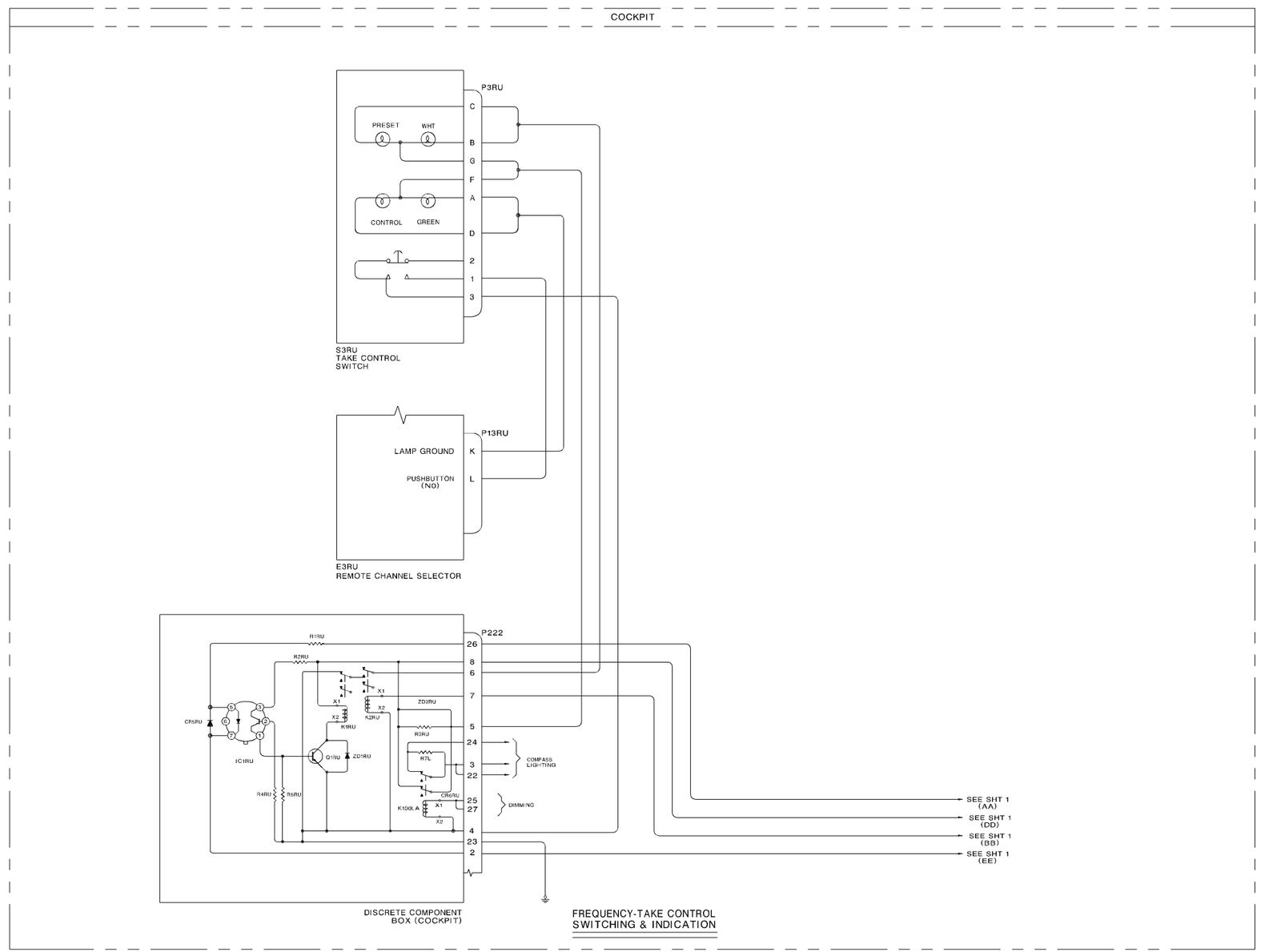

AN/ARC-164 UHF System – Schematic (Sheet 2 of 2) Figure 3-4

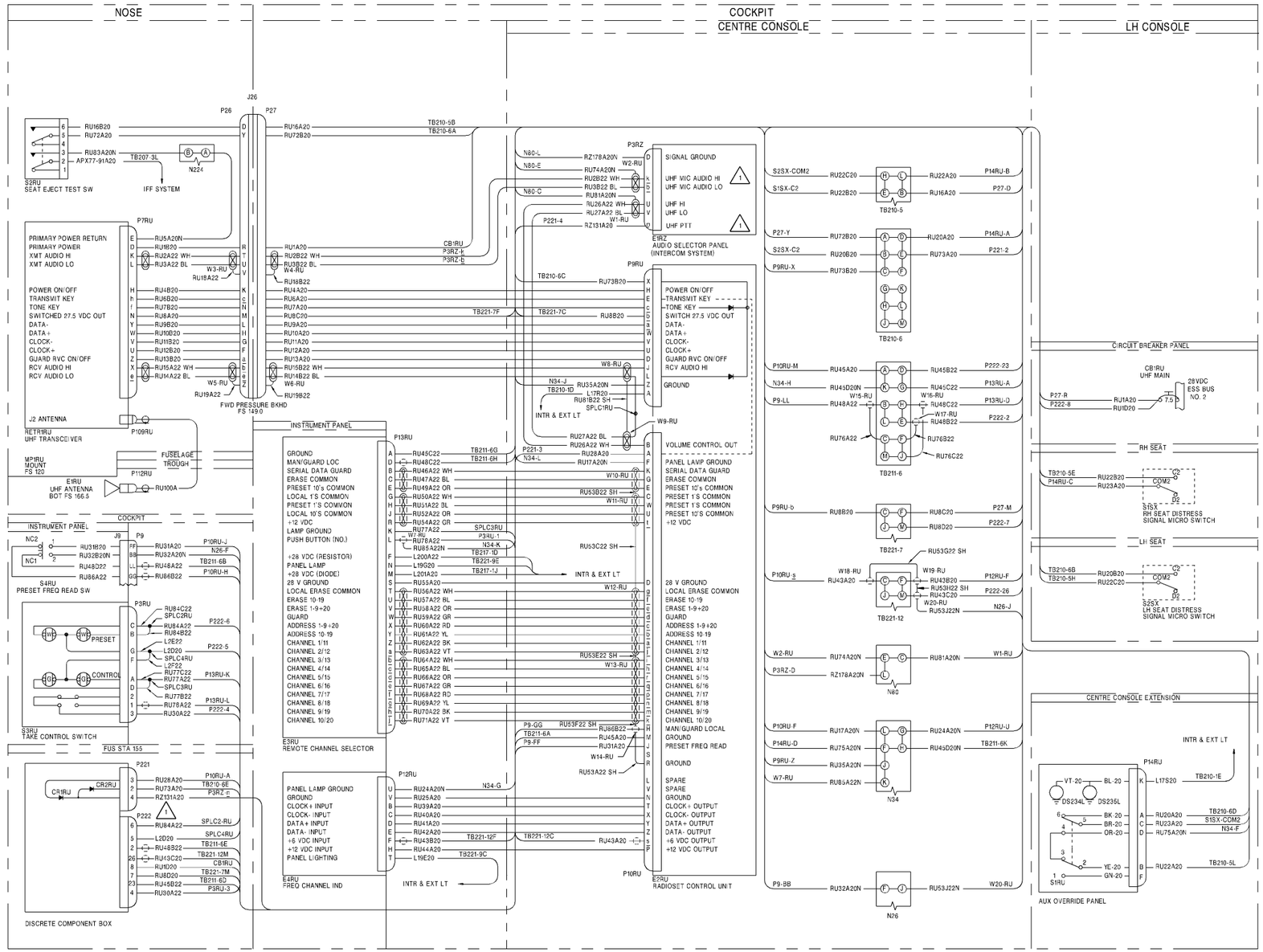

NOTE

1 REFER TO VHF PTT, FIGURE 4-4.

AN/ARC-164 UHF System – Wiring Figure 3-5

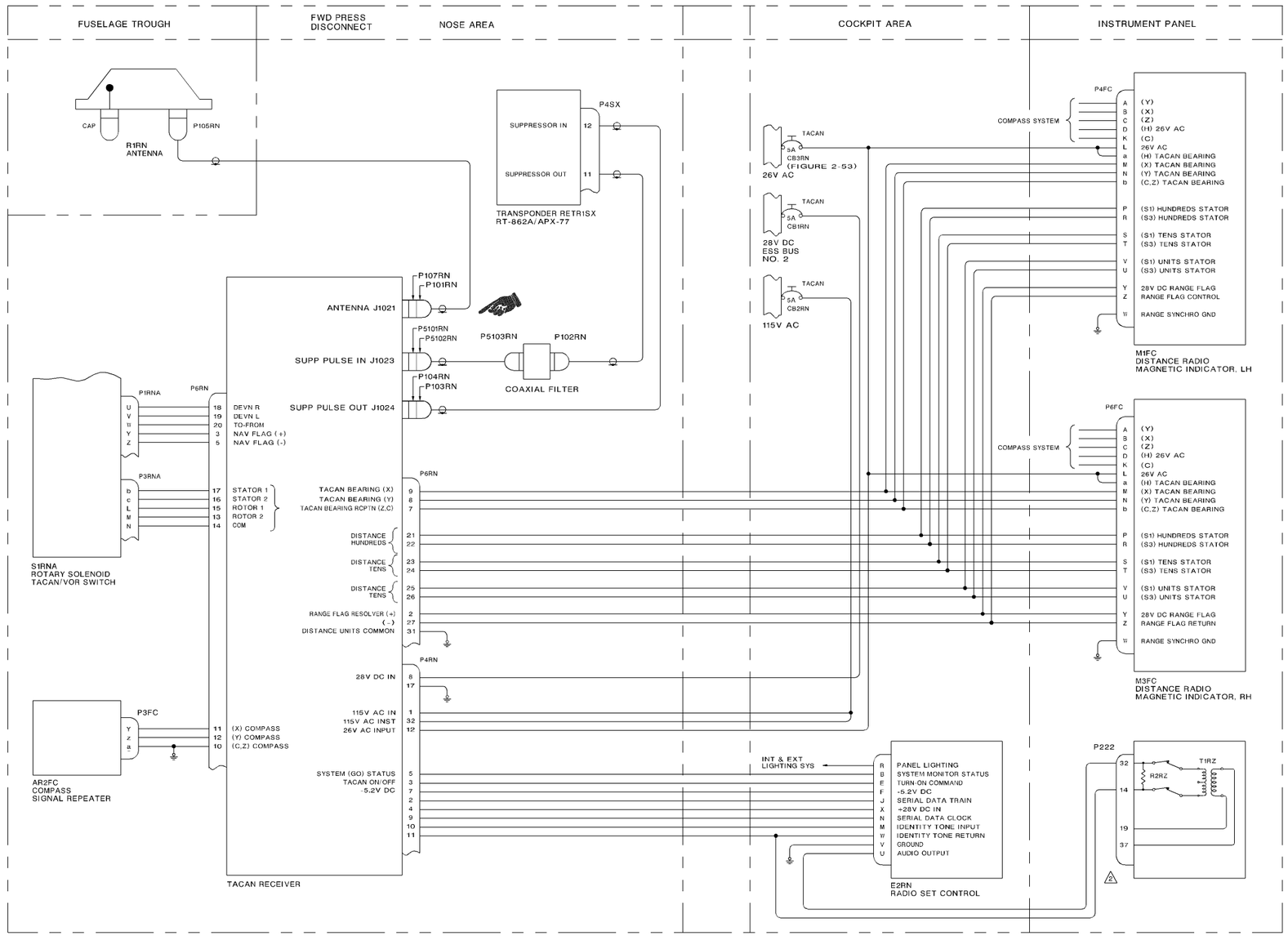

NOTE

1. REFER TO TACAN AN/ARN 504.

2. REFER TO COCKPIT DISCRETE COMPOMENT BOX.

BDW03017

AN/ARN-504 TACAN System – Schematic Figure 3-6

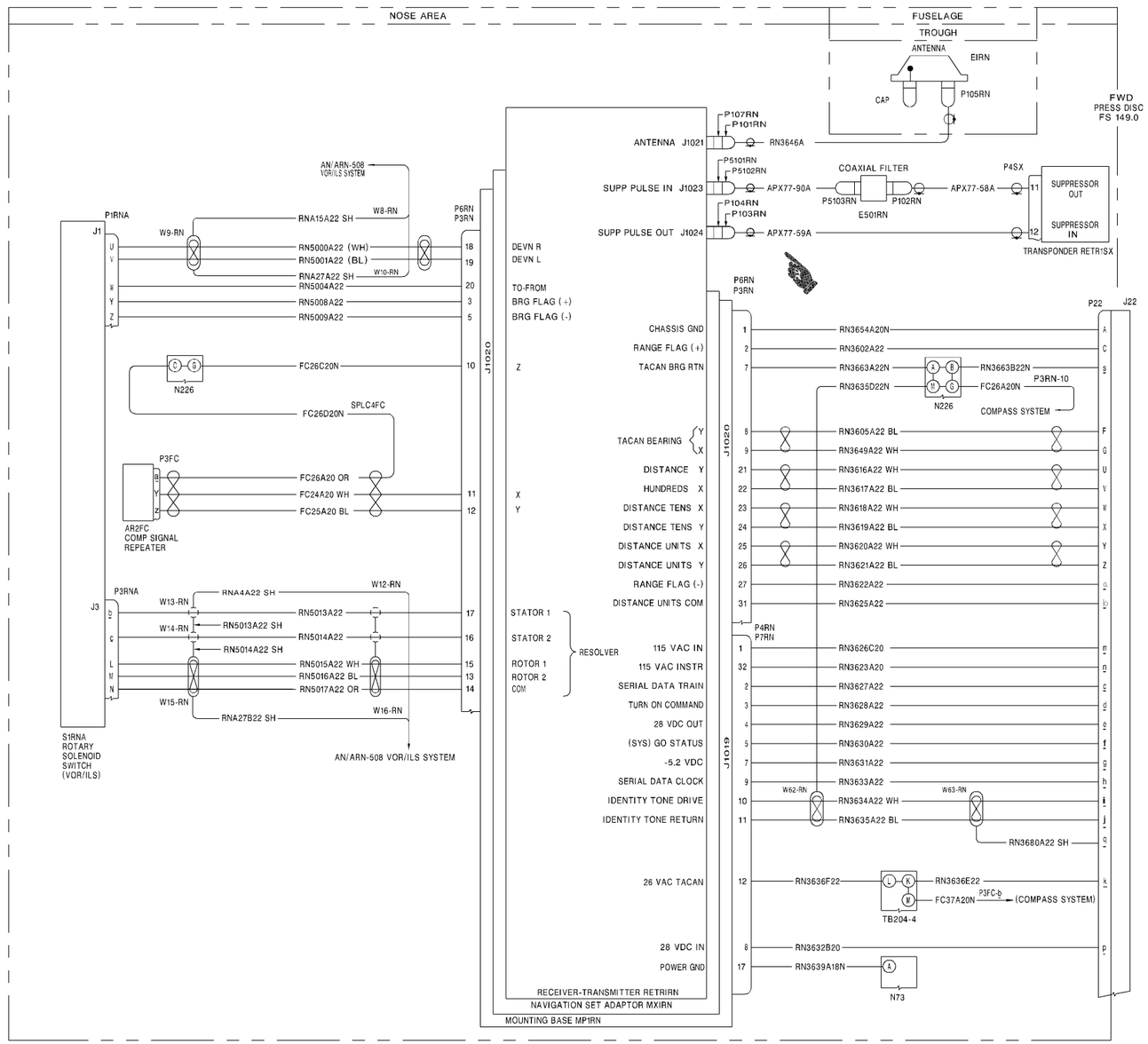

BDW03018

AN/ARN-504 TACAN System – Wiring (Sheet 1 of 3) Figure 3-7

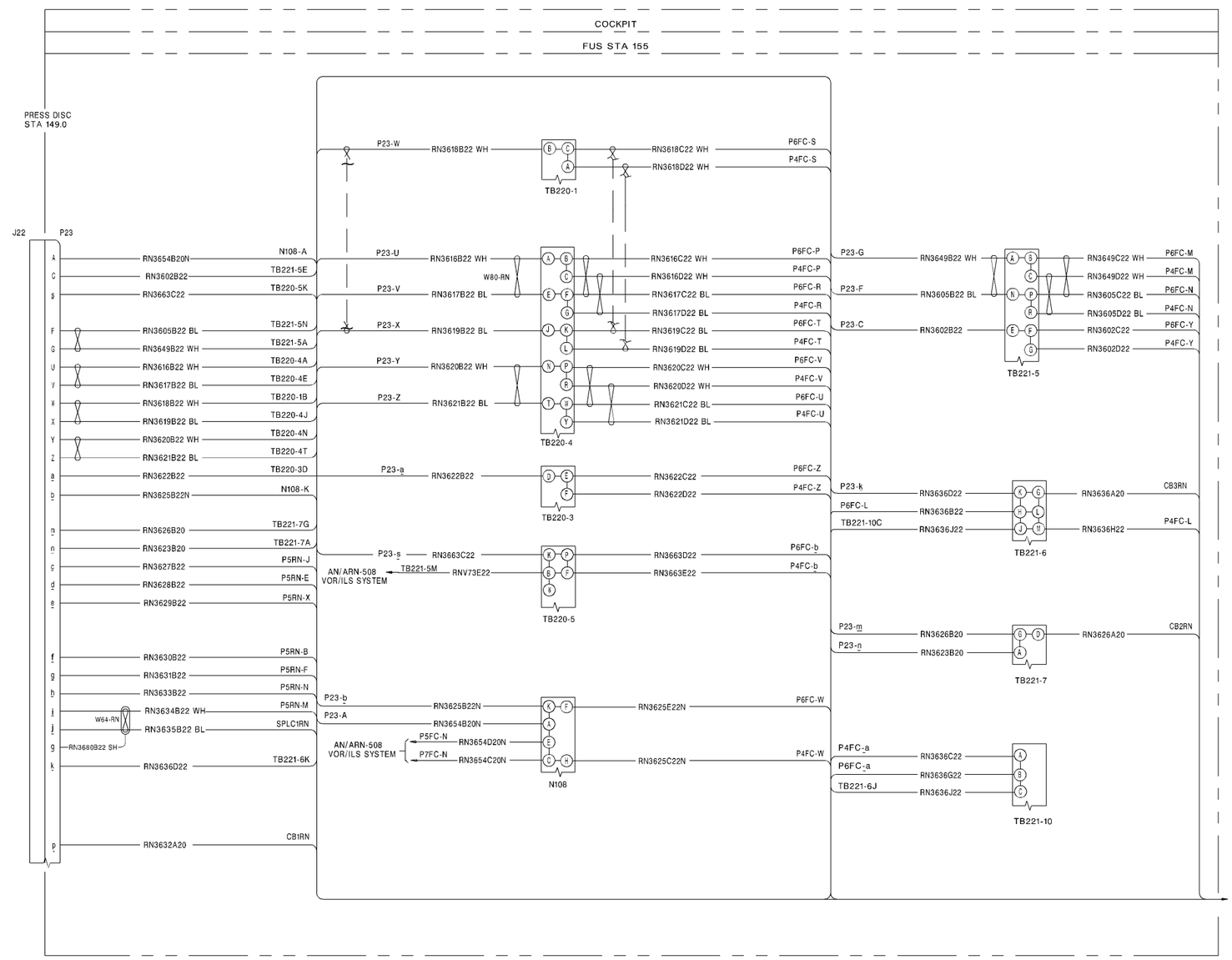

BDW03019

AN/ARN-504 TACAN System – Wiring (Sheet 2 of 3) Figure 3-7

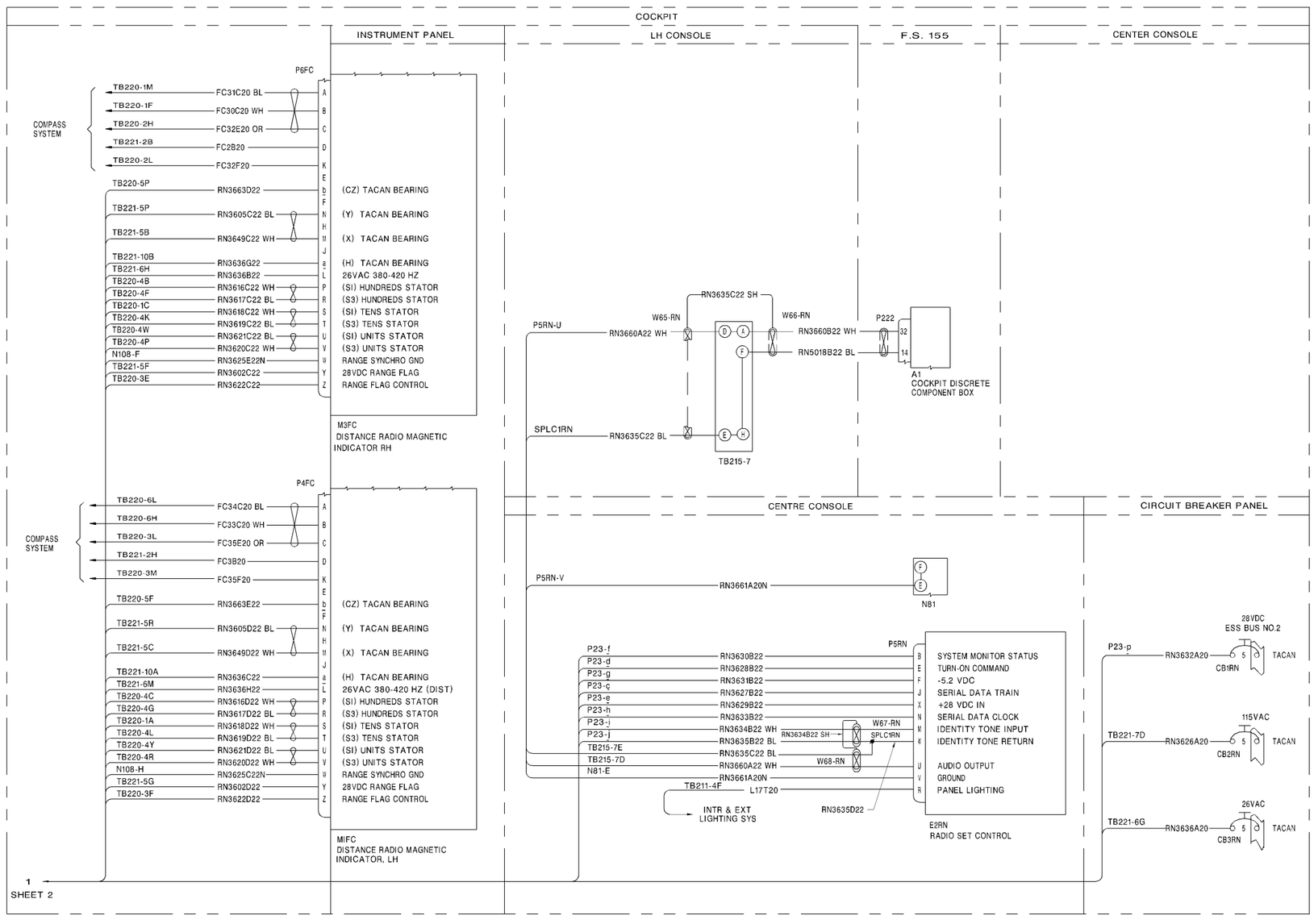

BDW03020

AN/ARN-504 TACAN System – Wiring (Sheet 3 of 3) Figure 3-7

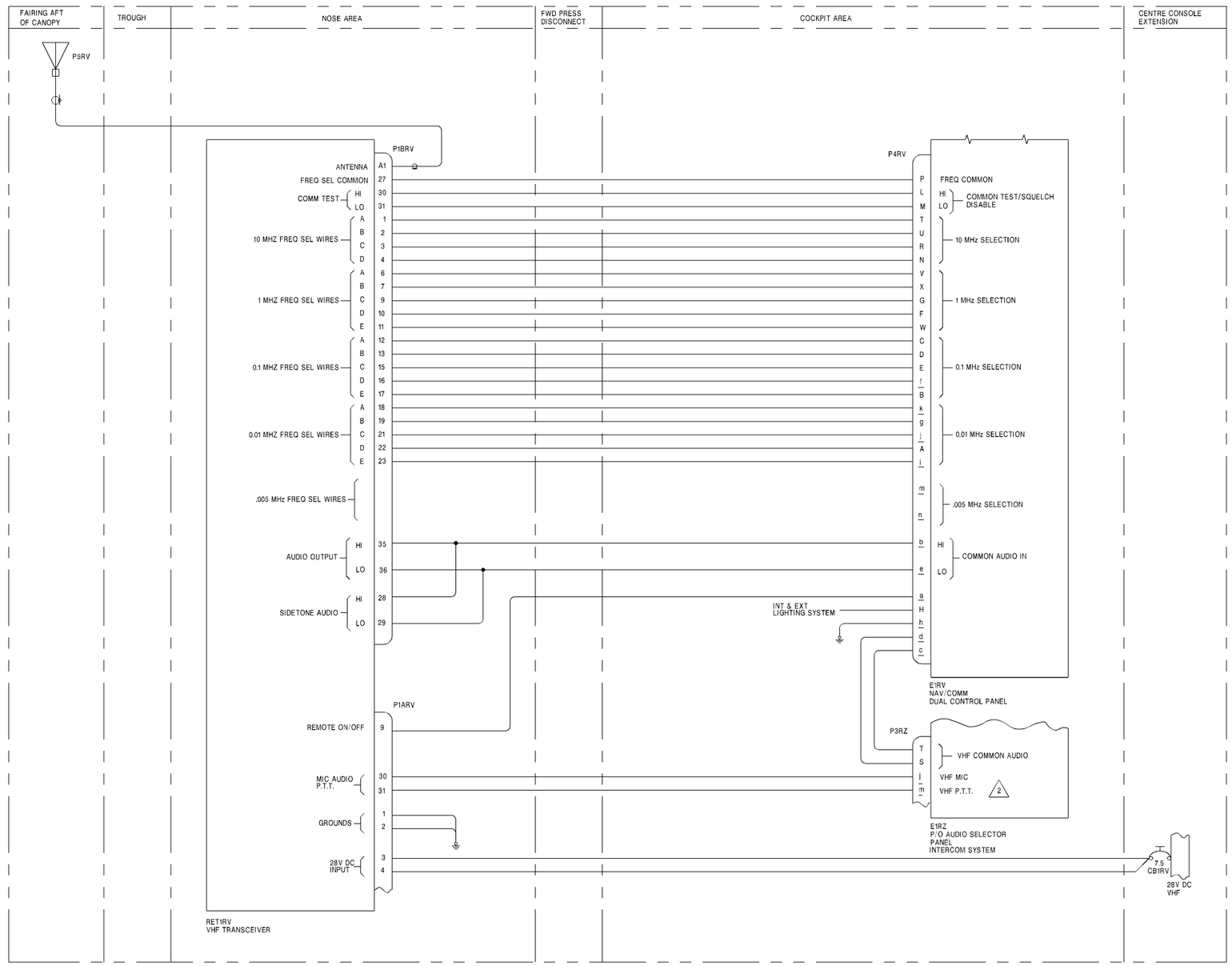

NOTES

1. REFER TO VHF AN/ARC 511.
2. REFER TO VHF PTT, FIGURE 4-4.

BDW03021

AN/ARC-511 VHF System – Schematic Figure 3-8

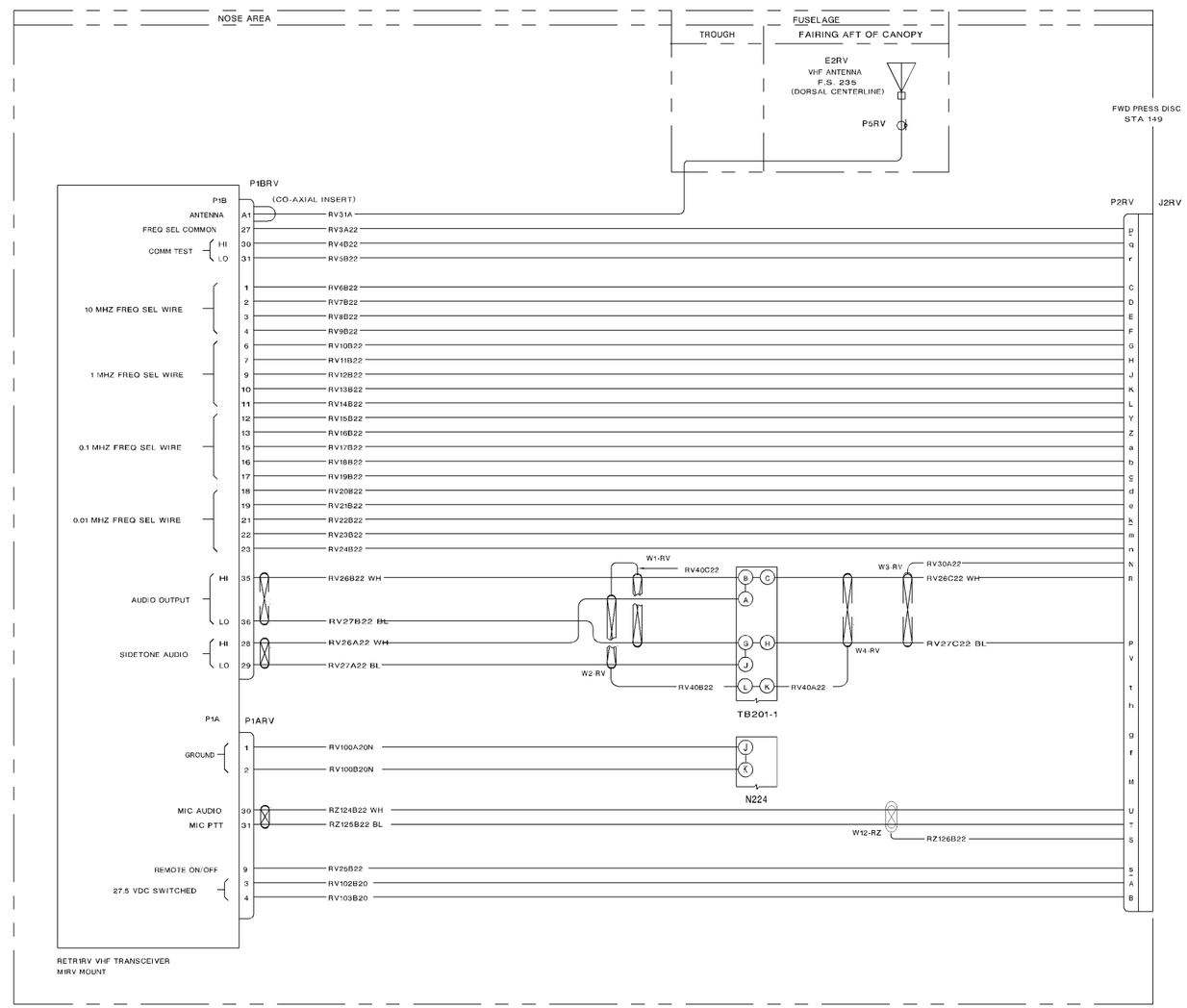

BDW03022

AN/ARC-511 VHF System – Wiring (Sheet 1 of 2) Figure 3-9

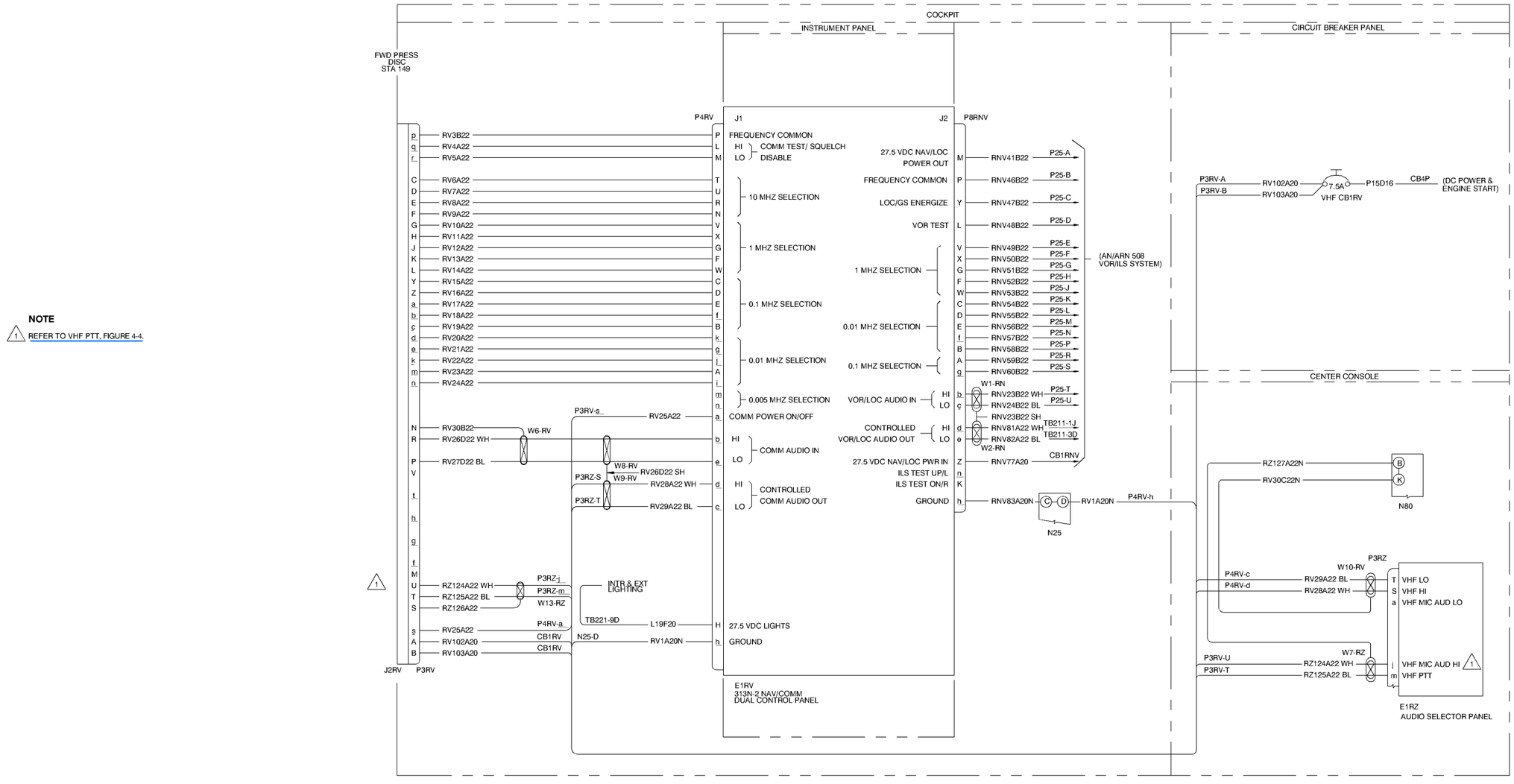

NOTE

1 REFER TO VHF PTT, FIGURE 4-4.

AN/ARC-511 VHF System – Wiring (Sheet 2 of 2) Figure 3-9

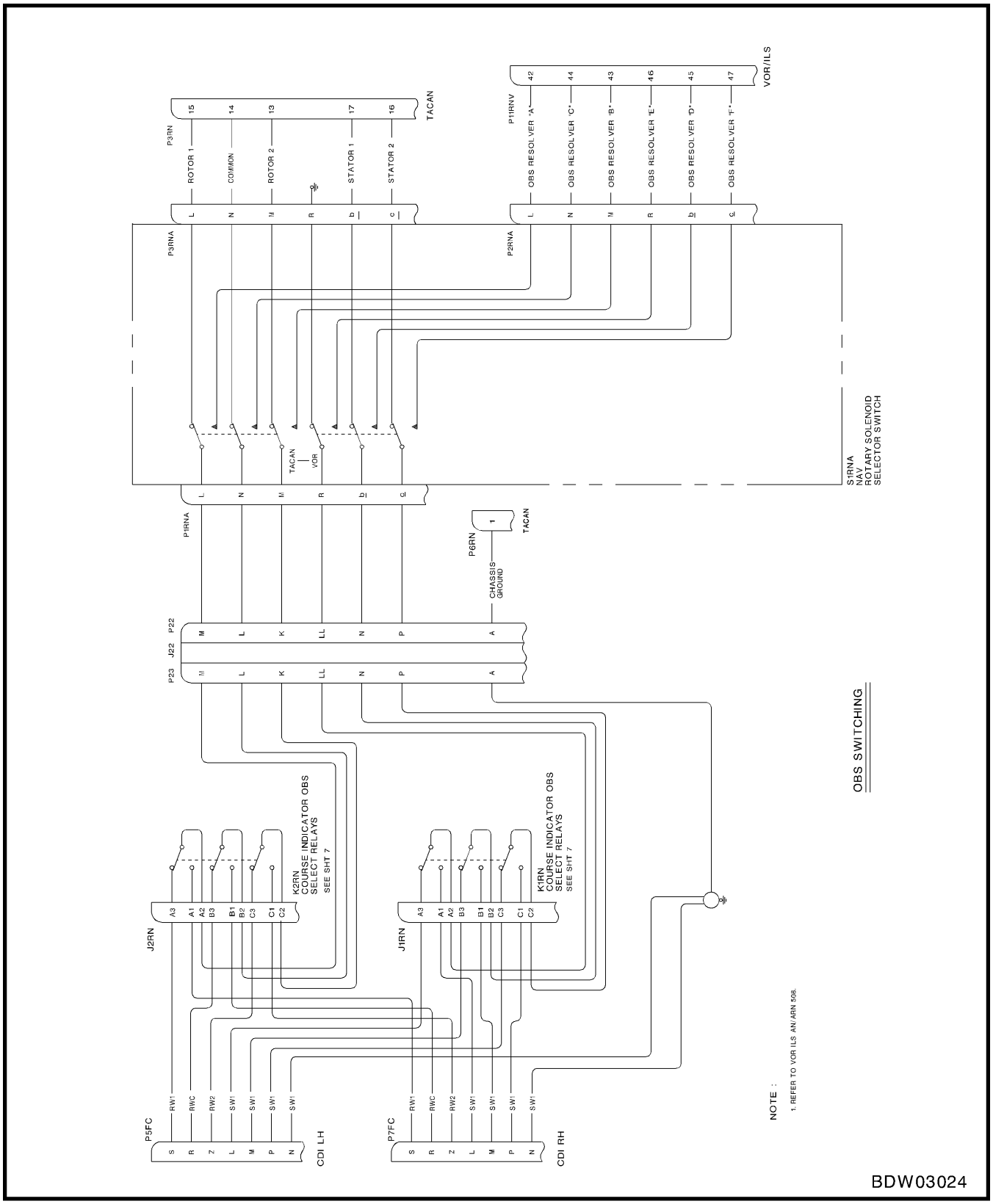

Figure 3-10 (Sheet 1 of 7) VOR/TACAN Switching – Schematic

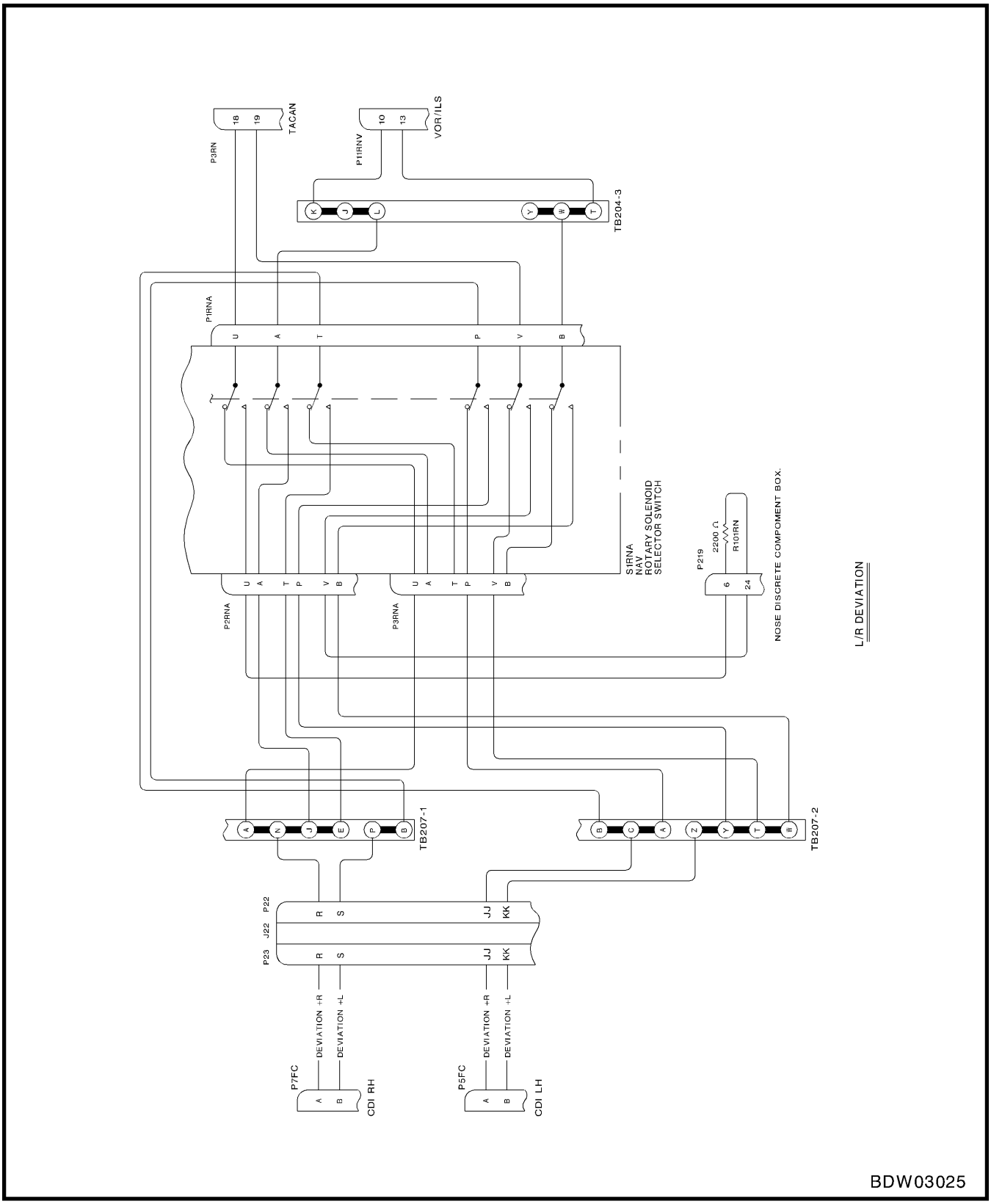

Figure 3-10 (Sheet 2 of 7) VOR/TACAN Switching – Schematic

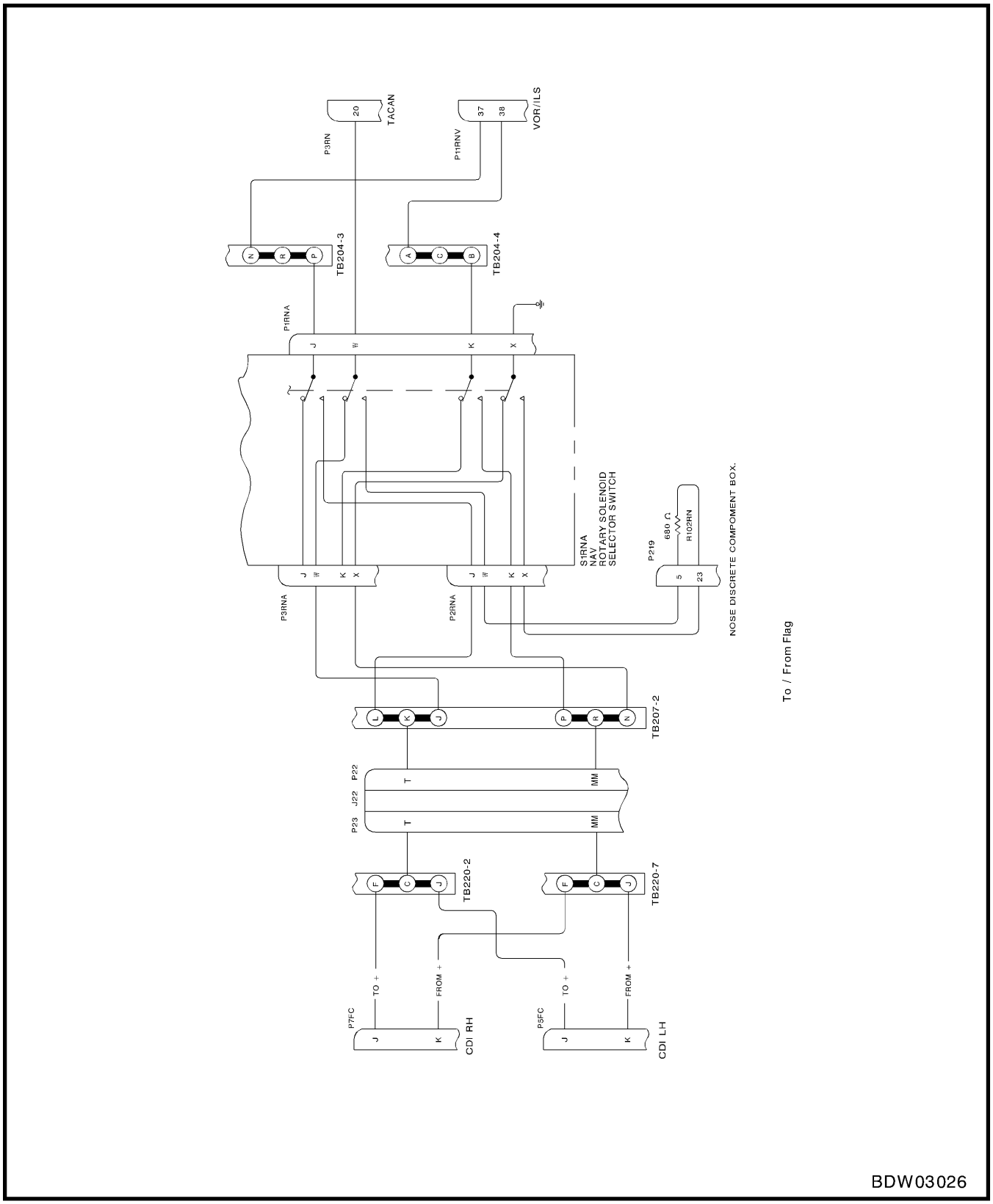

Figure 3-10 (Sheet 3 of 7) VOR/TACAN Switching – Schematic

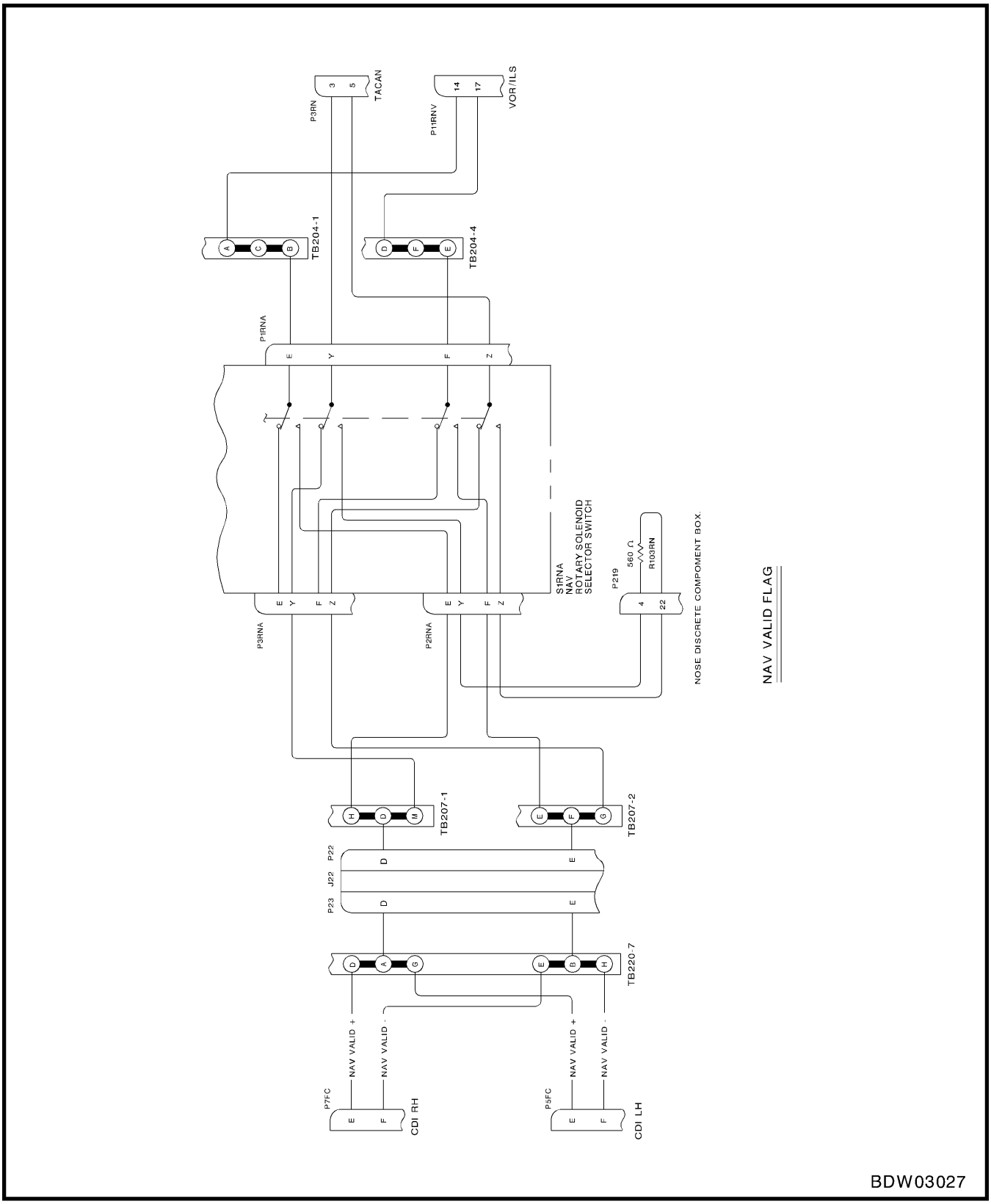

Figure 3-10 (Sheet 4 of 7) VOR/TACAN Switching – Schematic

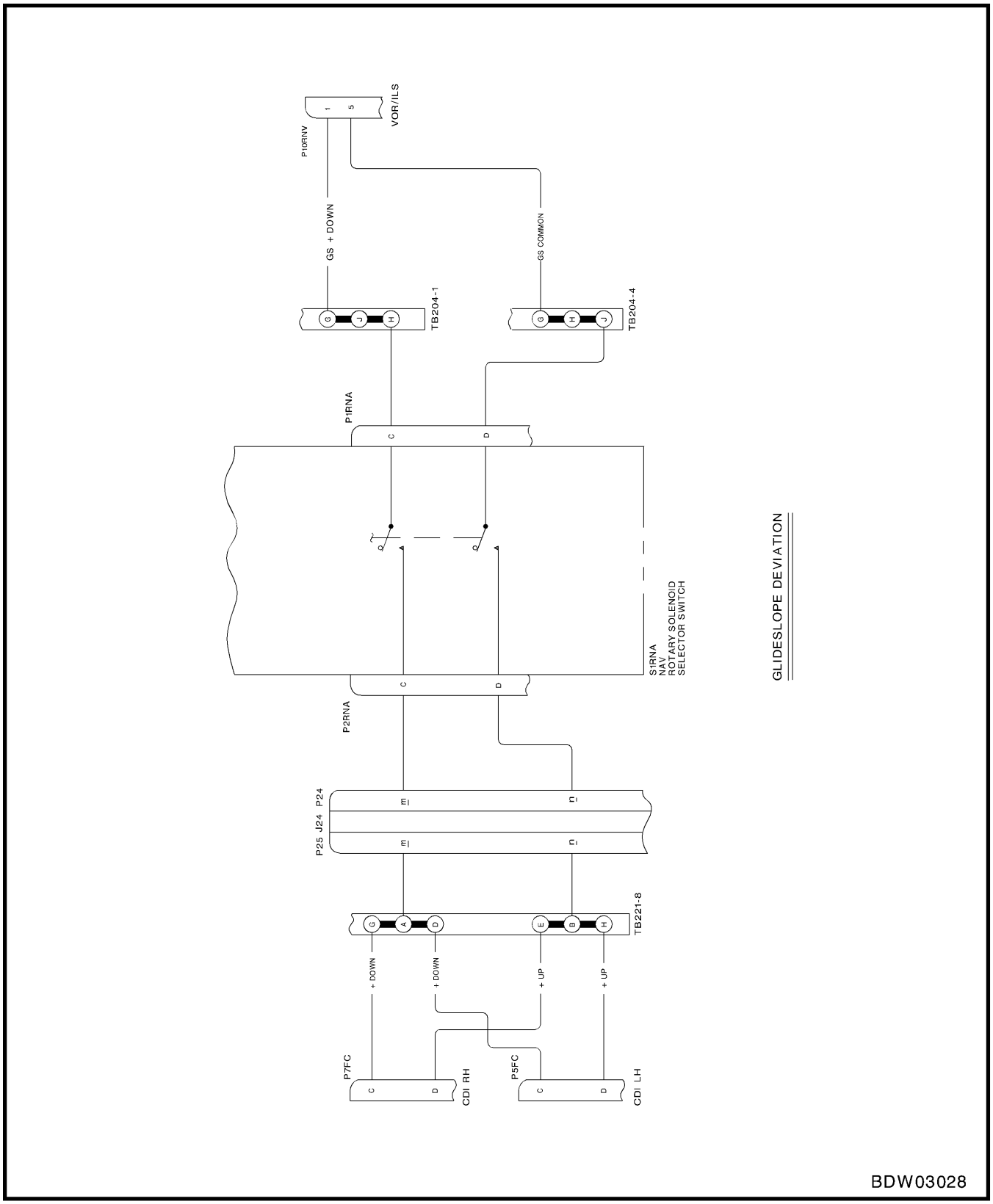

Figure 3-10 (Sheet 5 of 7) VOR/TACAN Switching – Schematic

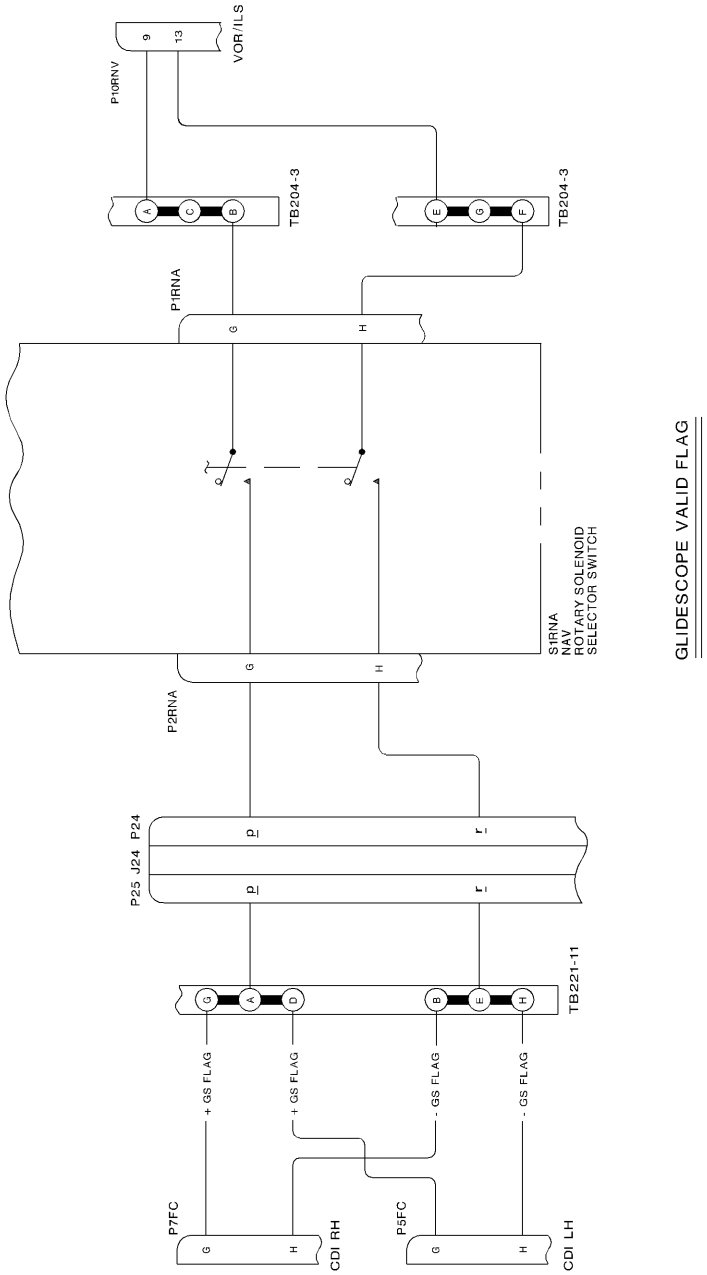

GLIDESCOPE VALID FLAG

BDW03029

Figure 3-10 (Sheet 6 of 7) VOR/TACAN Switching – Schematic

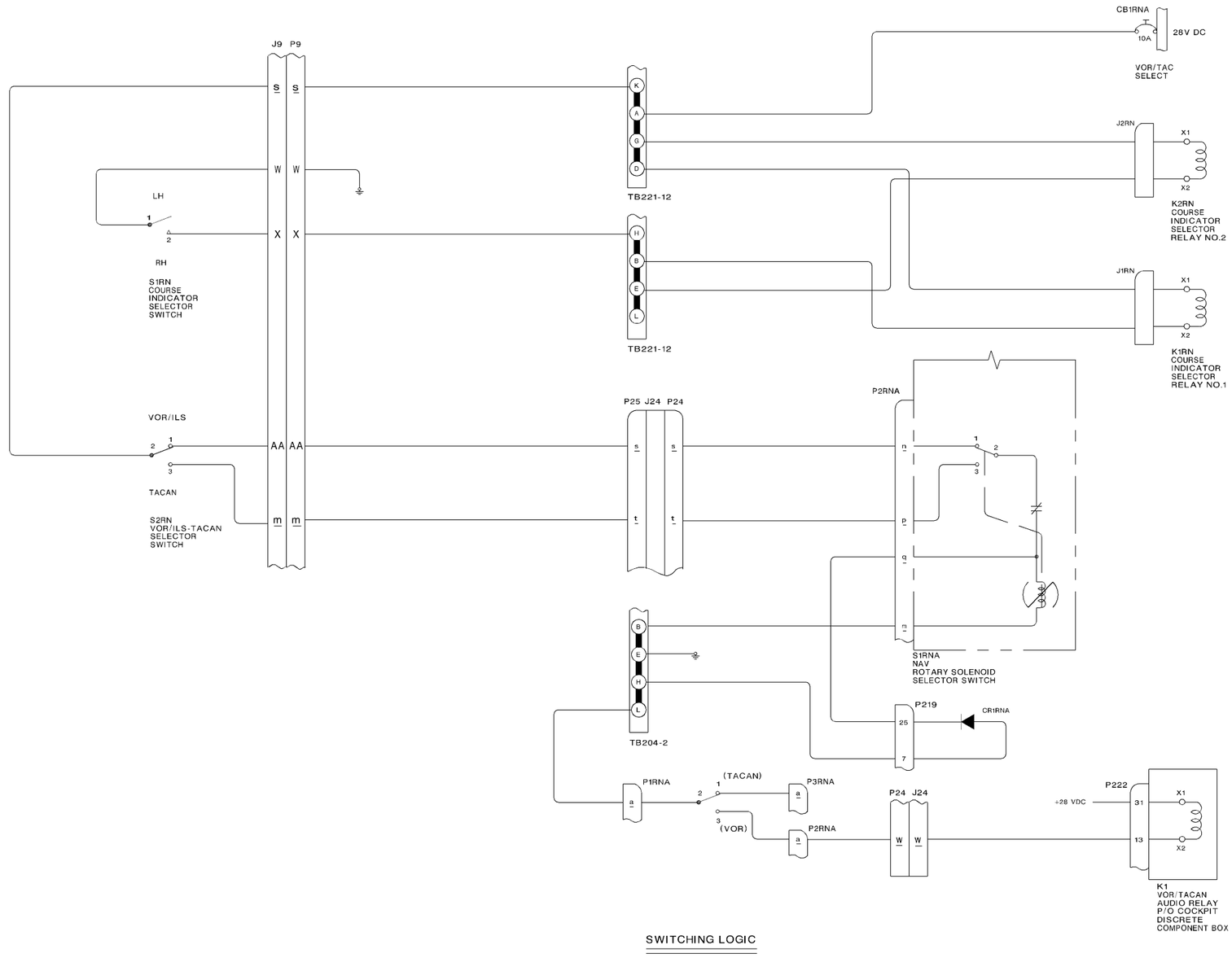

VOR/TACAN Switching – Schematic (Sheet 7 of 7) Figure 3-10

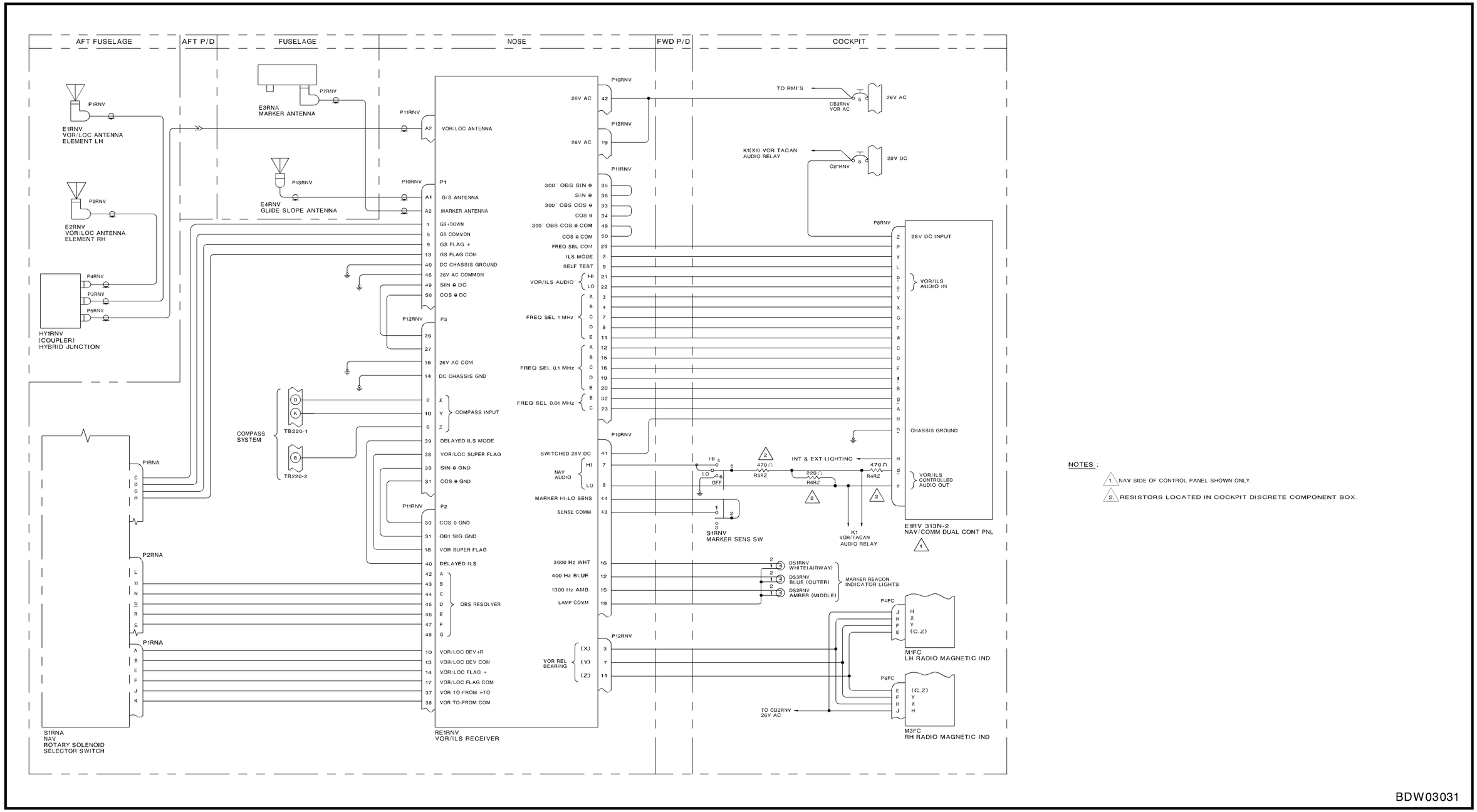

AN/ARN-508 VOR/ILS Navigation System – Schematic Figure 3-11

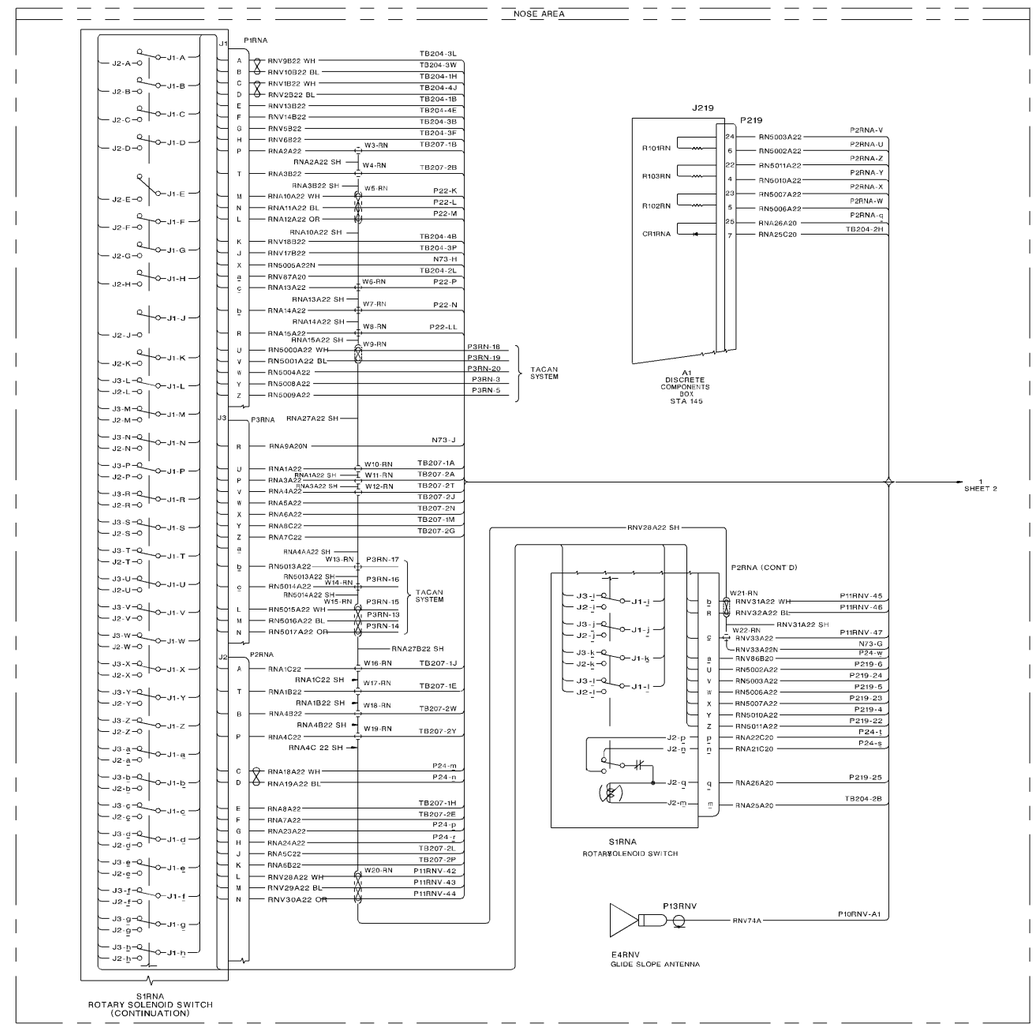

BDW03032

AN/ARN-508 VOR/ILS and Course Indication Switching – Wiring (Sheet 1 of 5) Figure 3-12

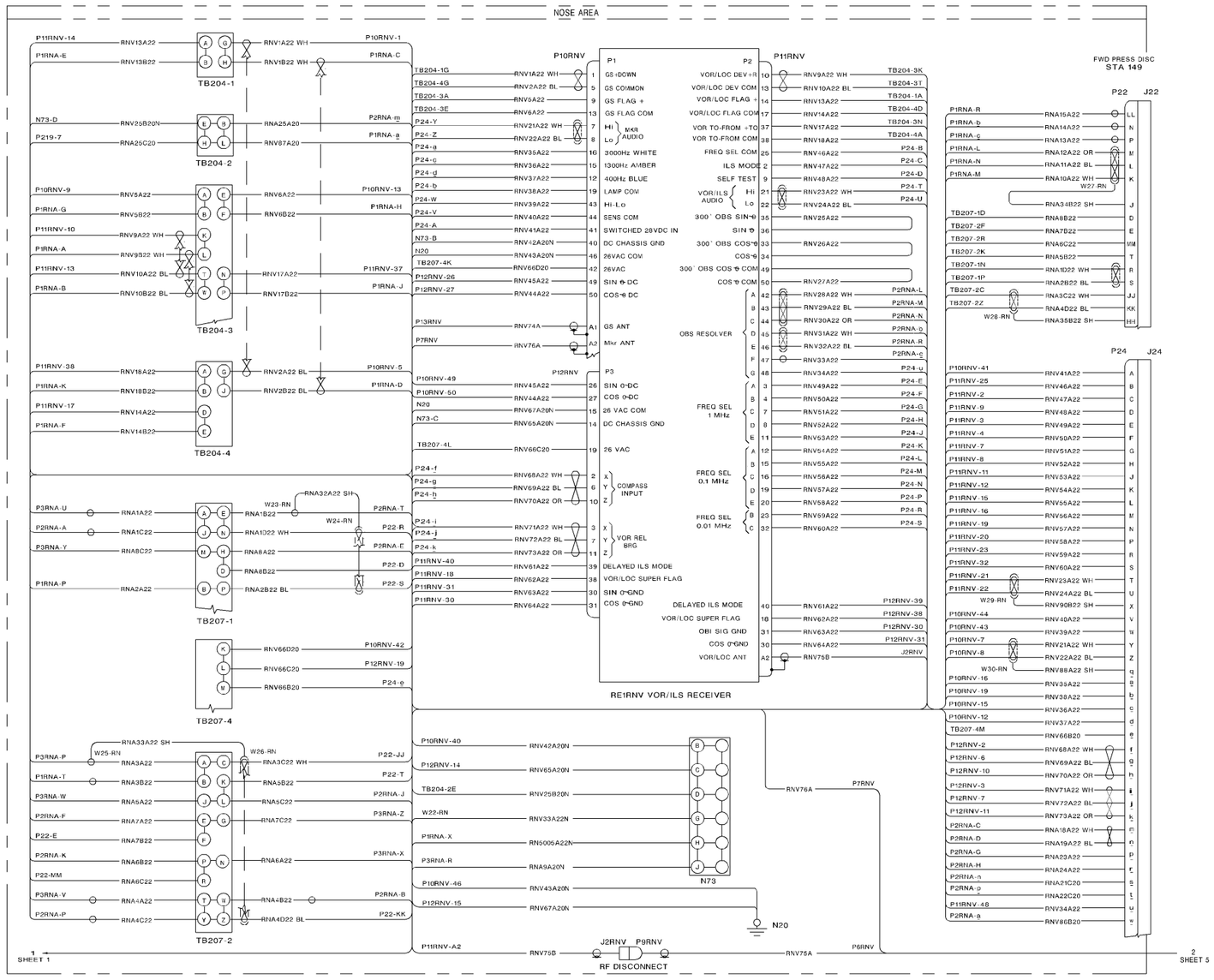

BDW03033

AN/ARN-508 VOR/ILS and Course Indication Switching – Wiring (Sheet 2 of 5) Figure 3-12

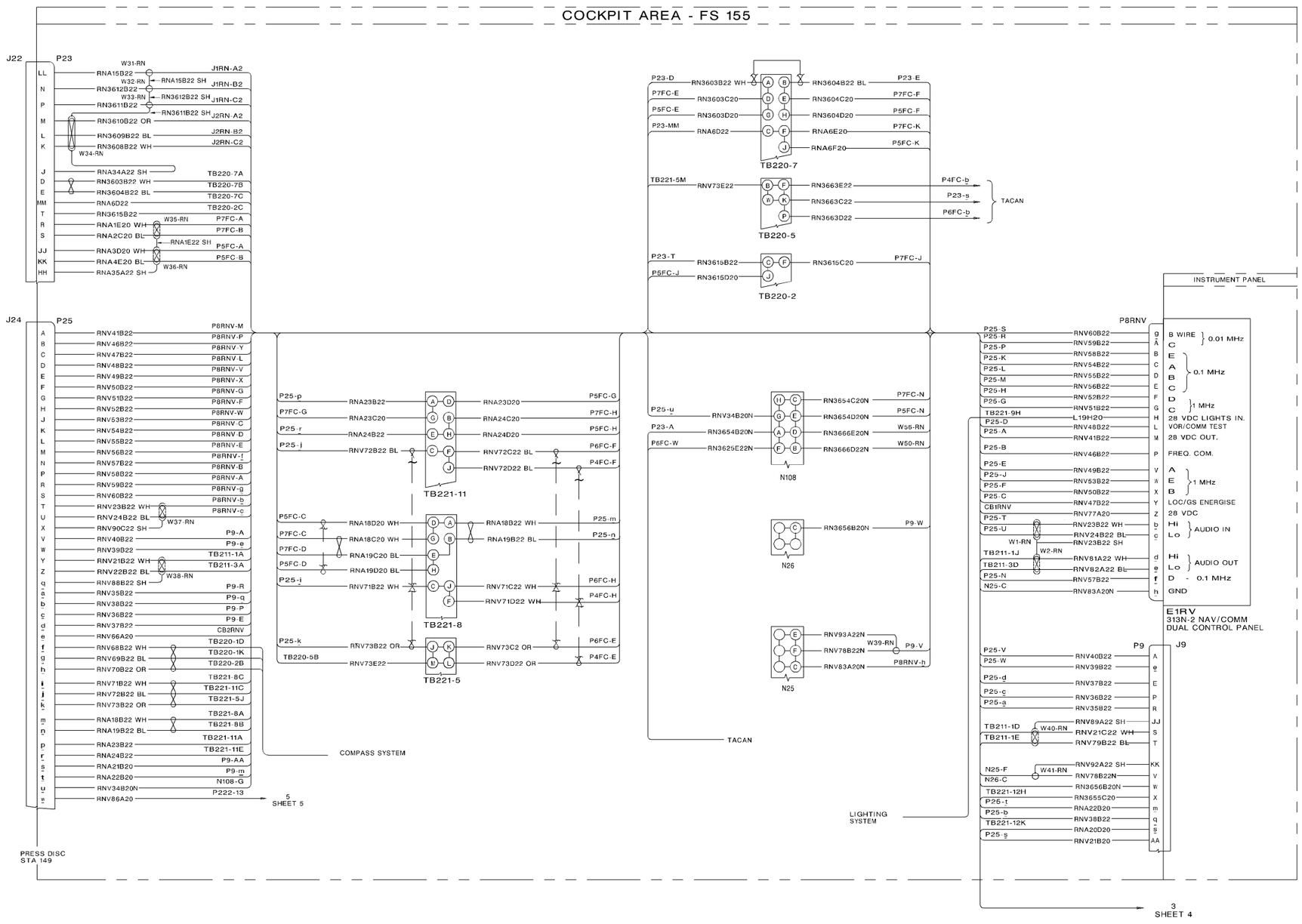

AN/ARN-508 VOR/ILS and Course Indication Switching – Wiring (Sheet 3 of 5) Figure 3-12

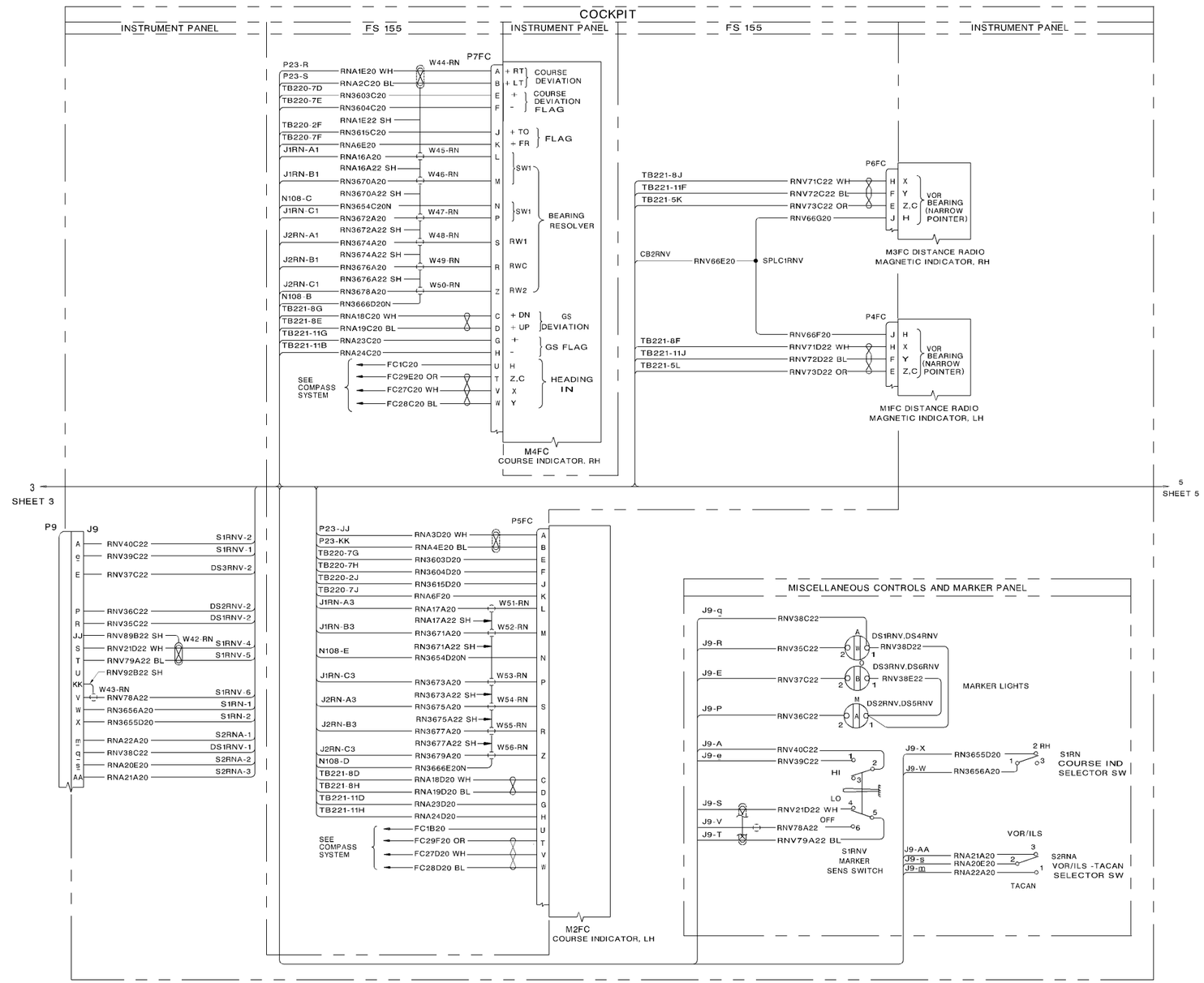

BDW03035

AN/ARN-508 VOR/ILS and Course Indication Switching – Wiring (Sheet 4 of 5) Figure 3-12

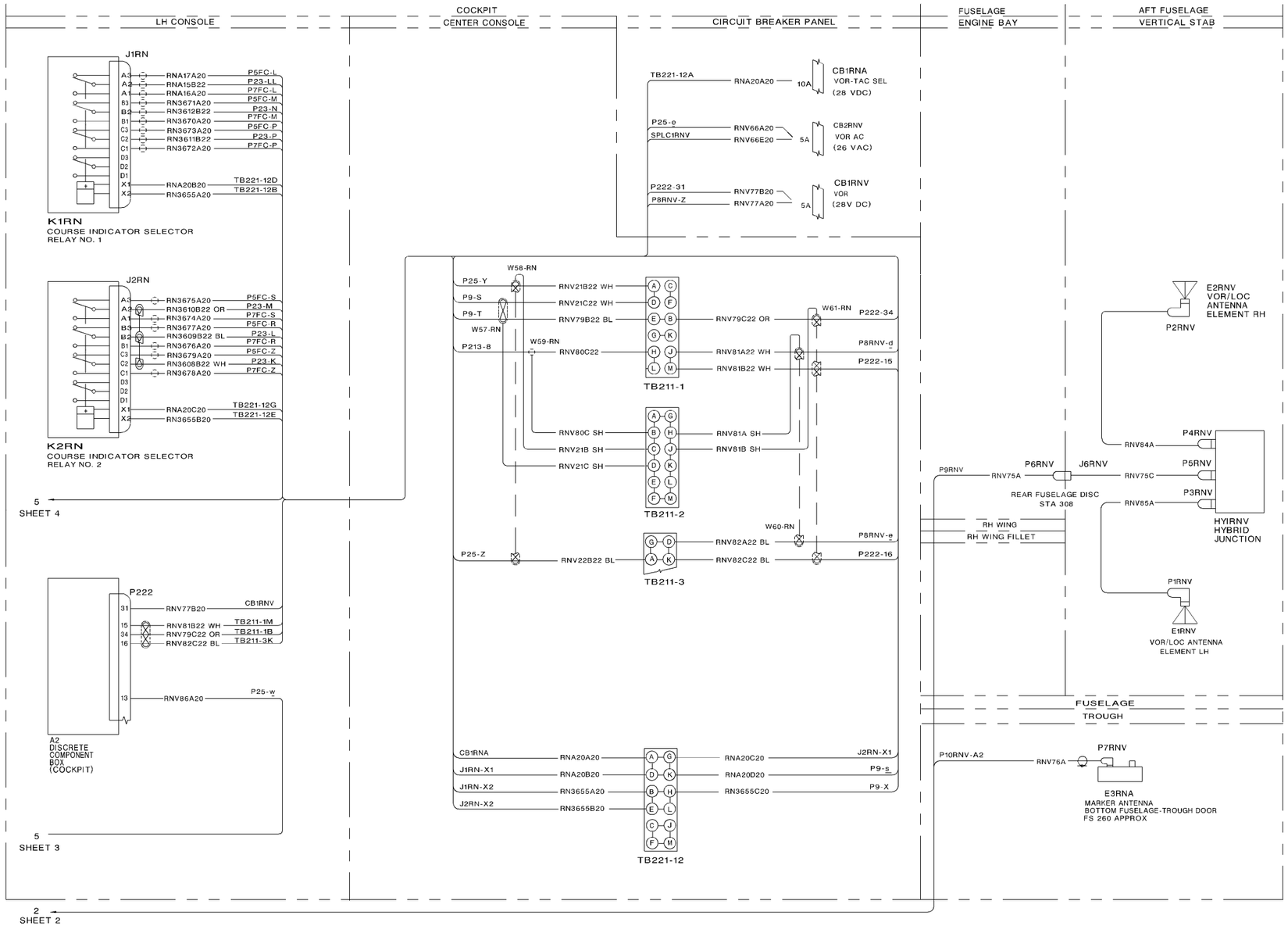

AN/ARN-508 VOR/ILS and Course Indication Switching – Wiring (Sheet 5 of 5) Figure 3-12

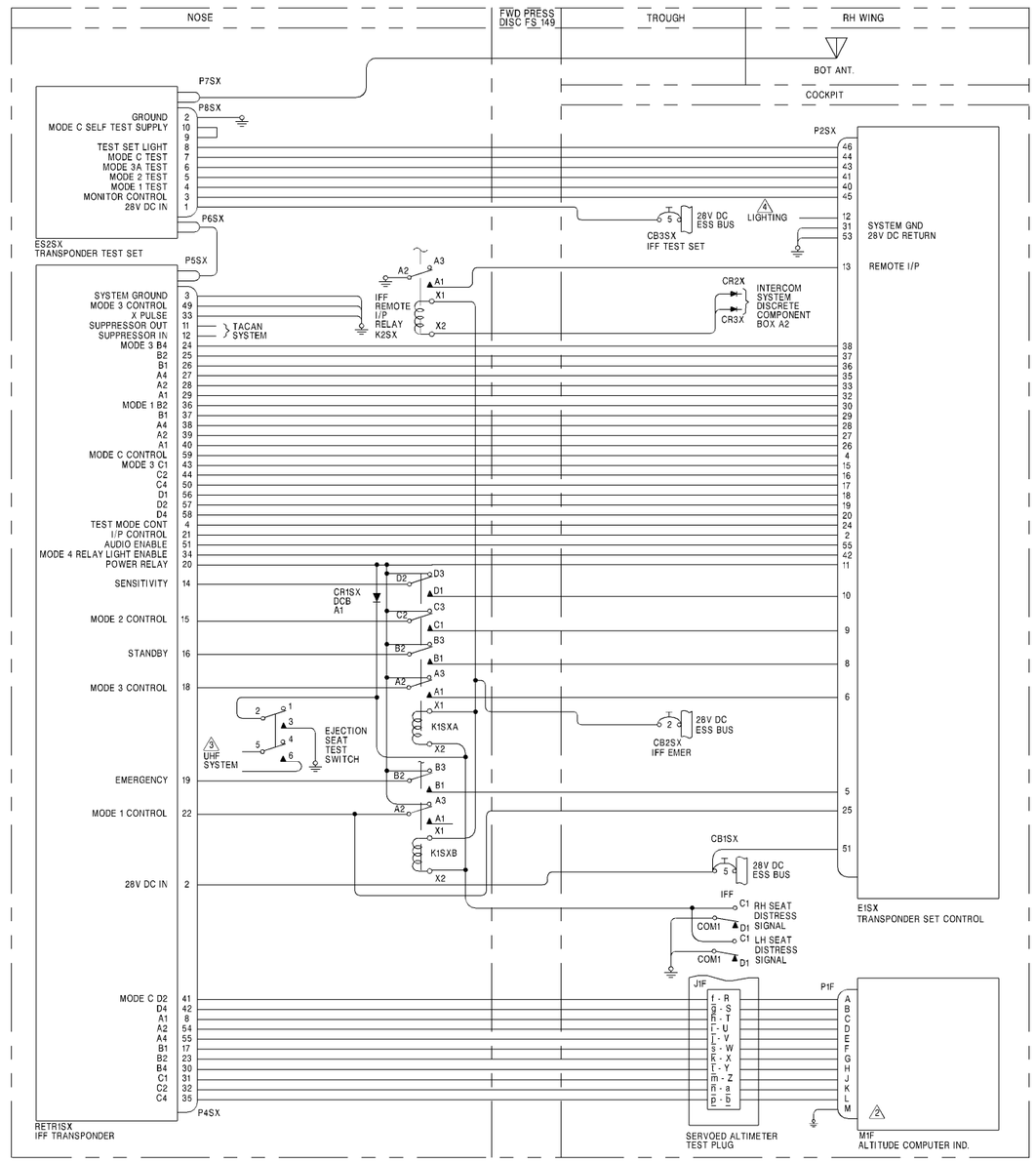

NOTES : 1. REFER TO IFF AN/APX 77.
2. REFER TO SERVOED ALT SYSTEM SCHEMATIC.
3. REFER TO UHF SYSTEM.
4. REFER TO INTERIOR AND EXTERIOR LIGHTING SYSTEM.

BDW03037

IFF System – Schematic Figure 3-13

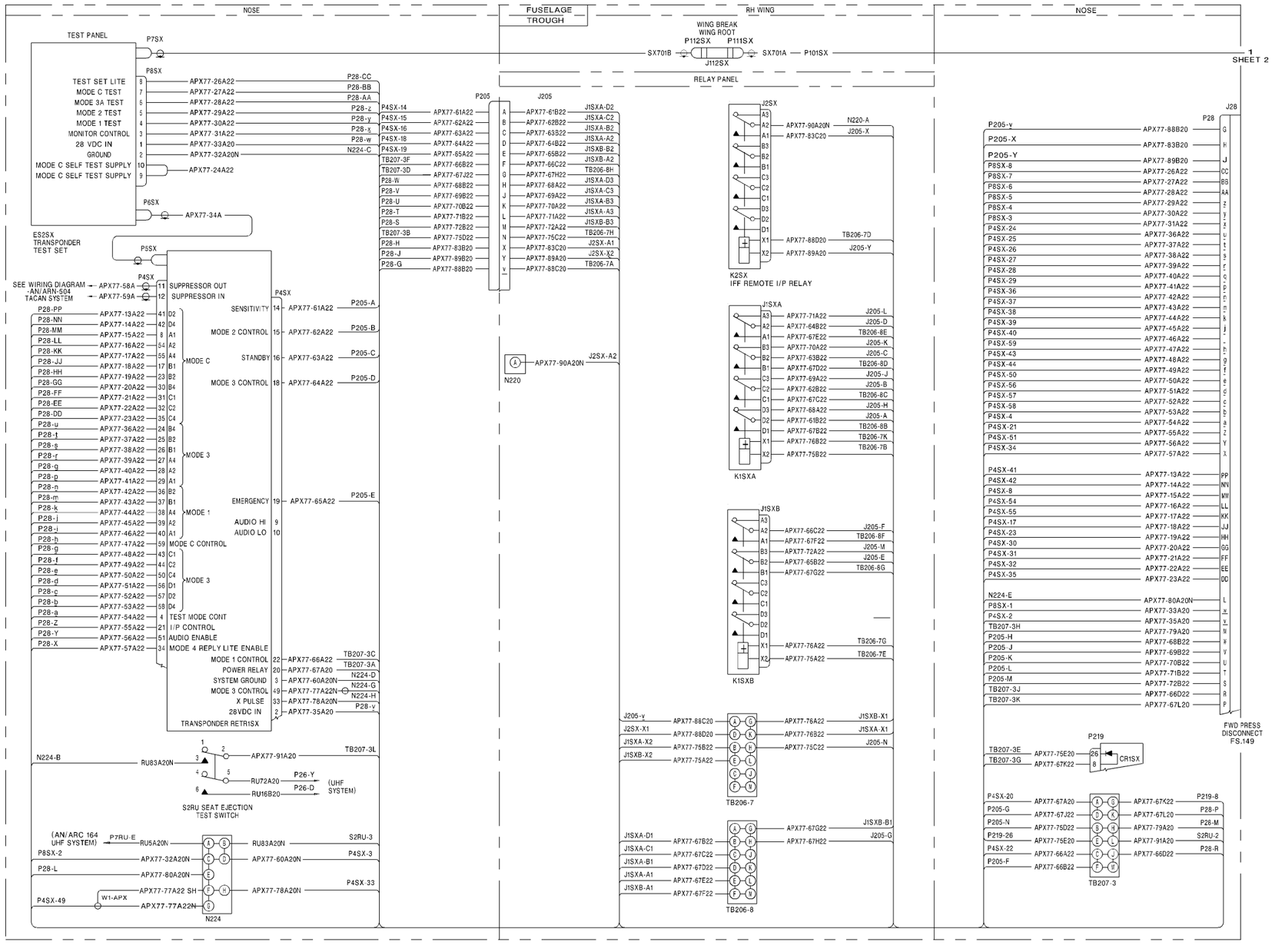

IFF System – Wiring (Sheet 1 of 2) Figure 3-14

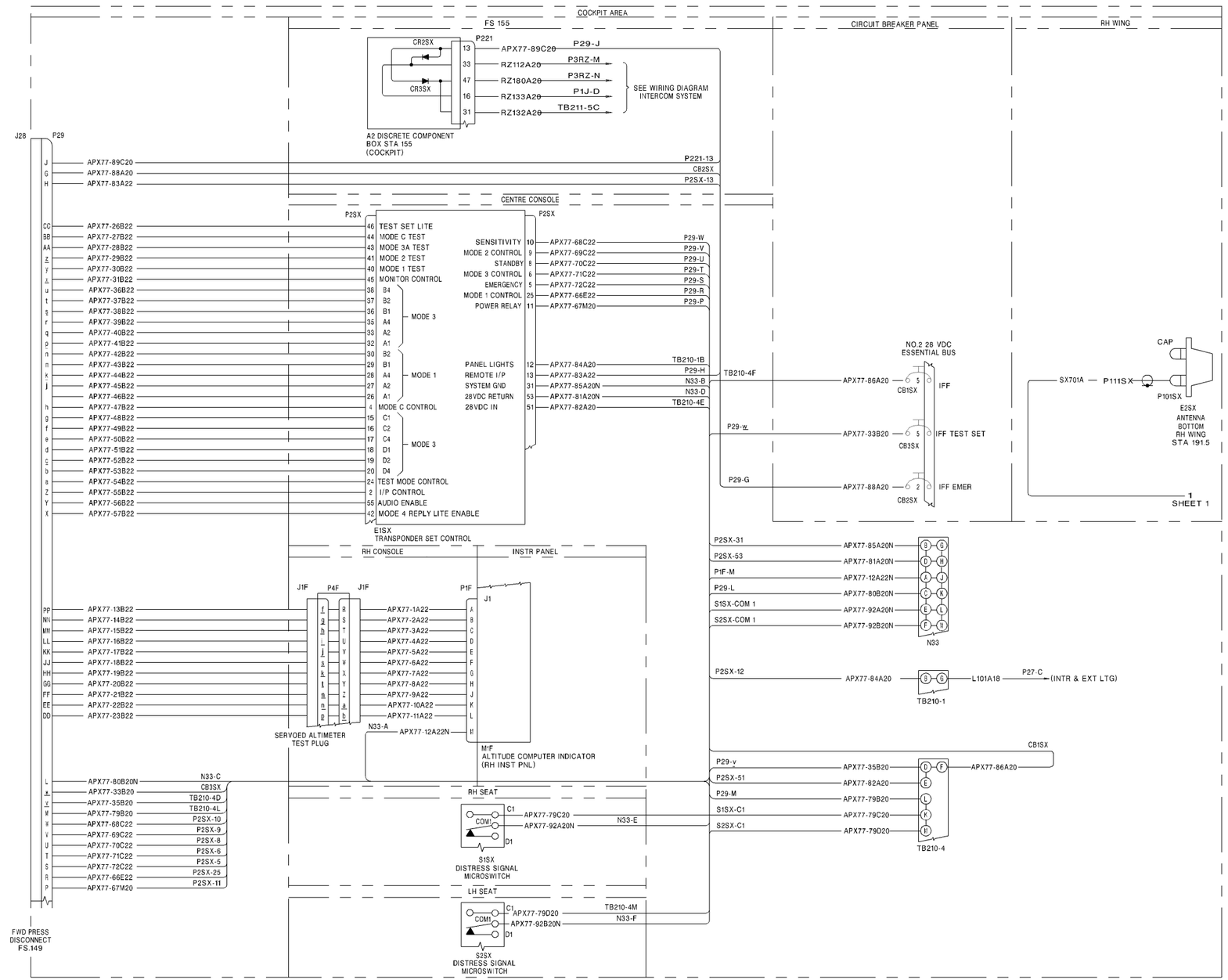

IFF System – Wiring (Sheet 2 of 2) Figure 3-14

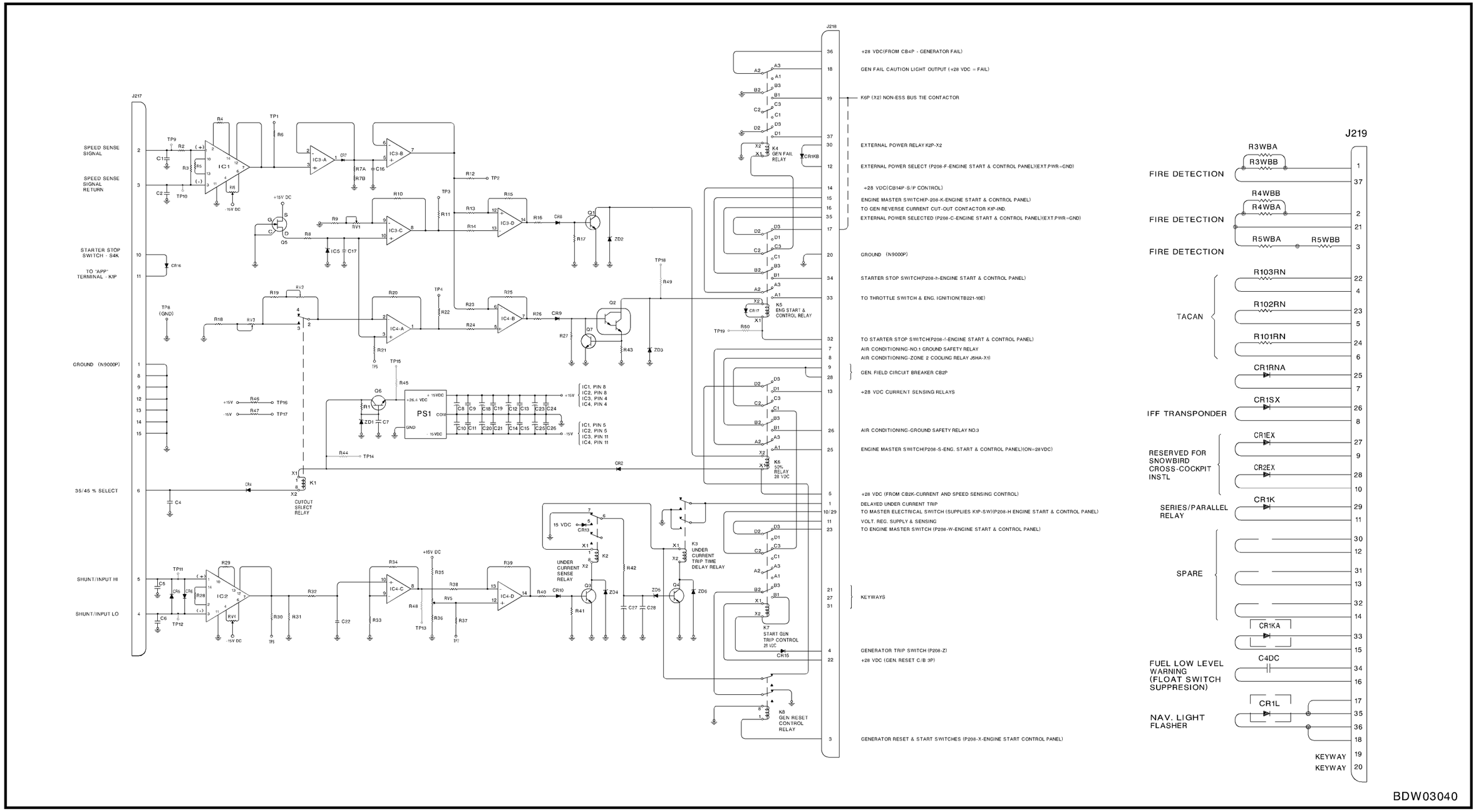

Discrete Component Box – Nose Figure 3-15

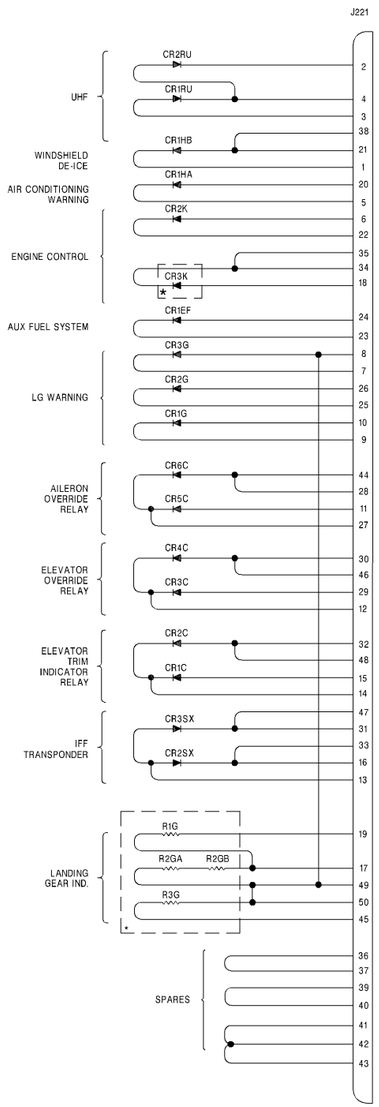

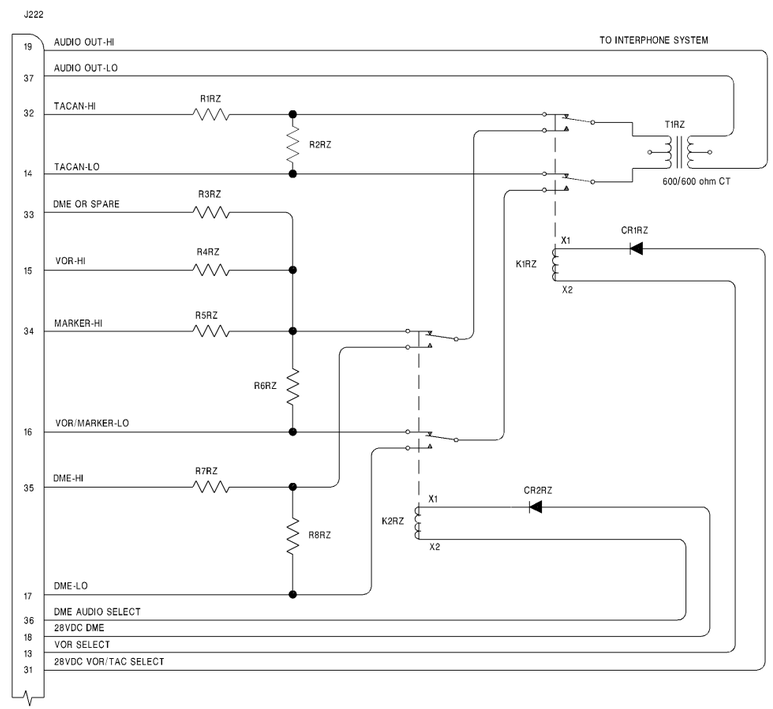

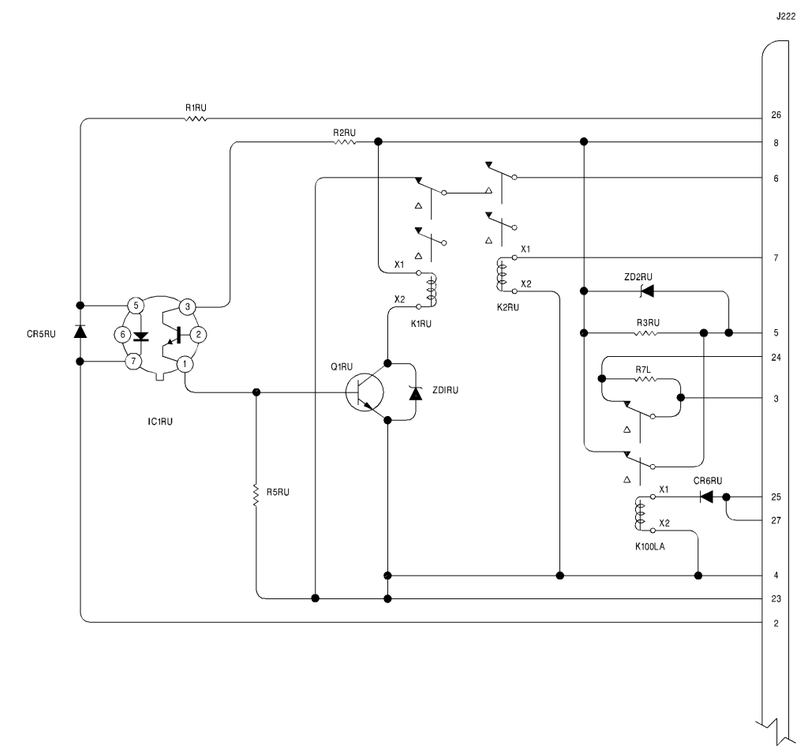

UHF LOGIC AND DIMMING CIRCUIT

NOTE : R2RZ, R3RZ, R7RZ AND R8RZ ARE NOT INSTALLED ON THIS CIRCUIT CARD. THEY ARE SHOWN FOR INFORMATION PURPOSES ONLY. SEE FIGURE 4-5 FOR PROPER INSTALLATION OF THE ADF AUDIO RESISTERS R2RZ AND R3RZ.

* MOUNTED ON HEATSINK

BDW03041

Discrete Component Box – Cockpit Figure 3-16

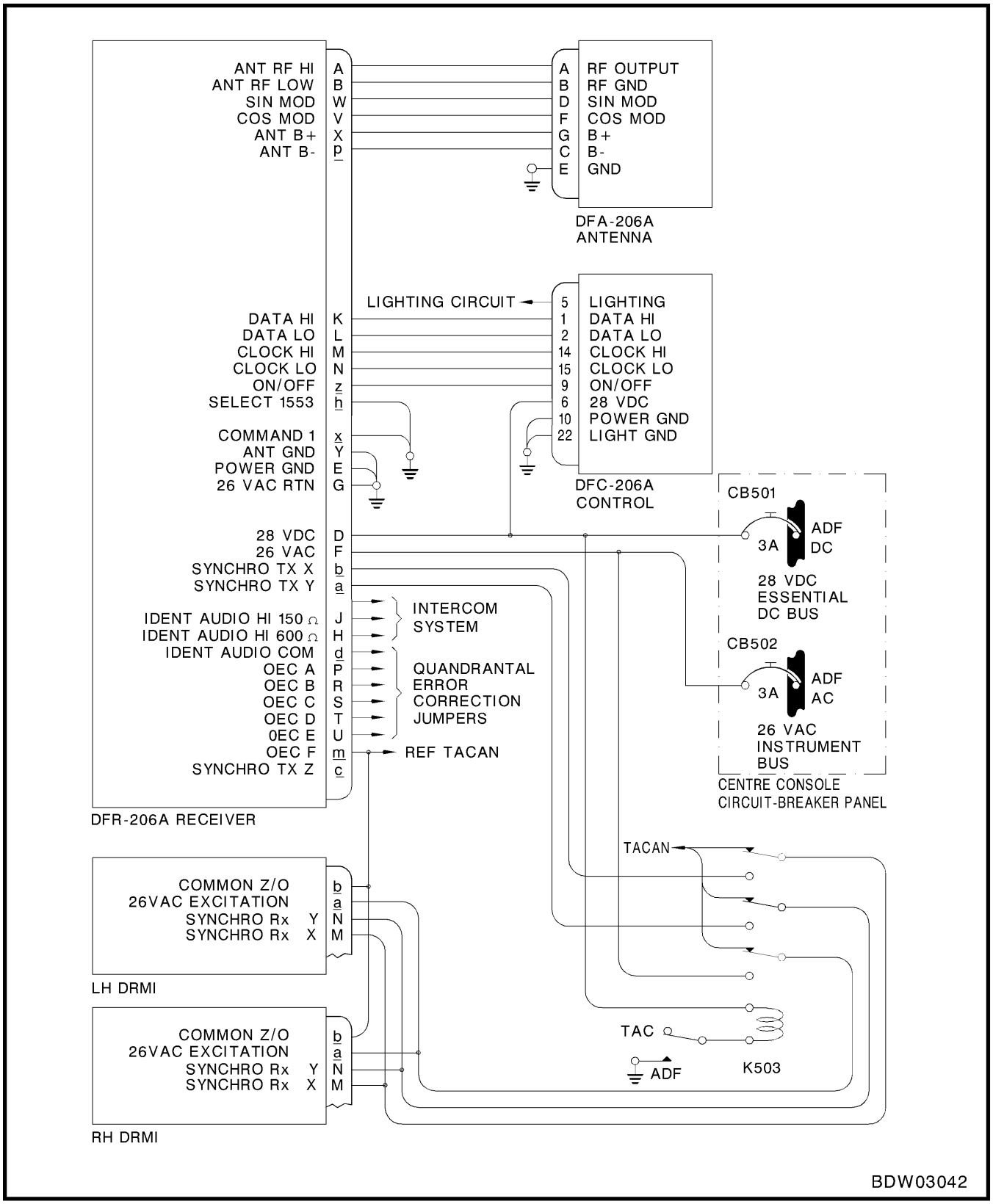

Figure 3-17 ADF-206A System – Schematic

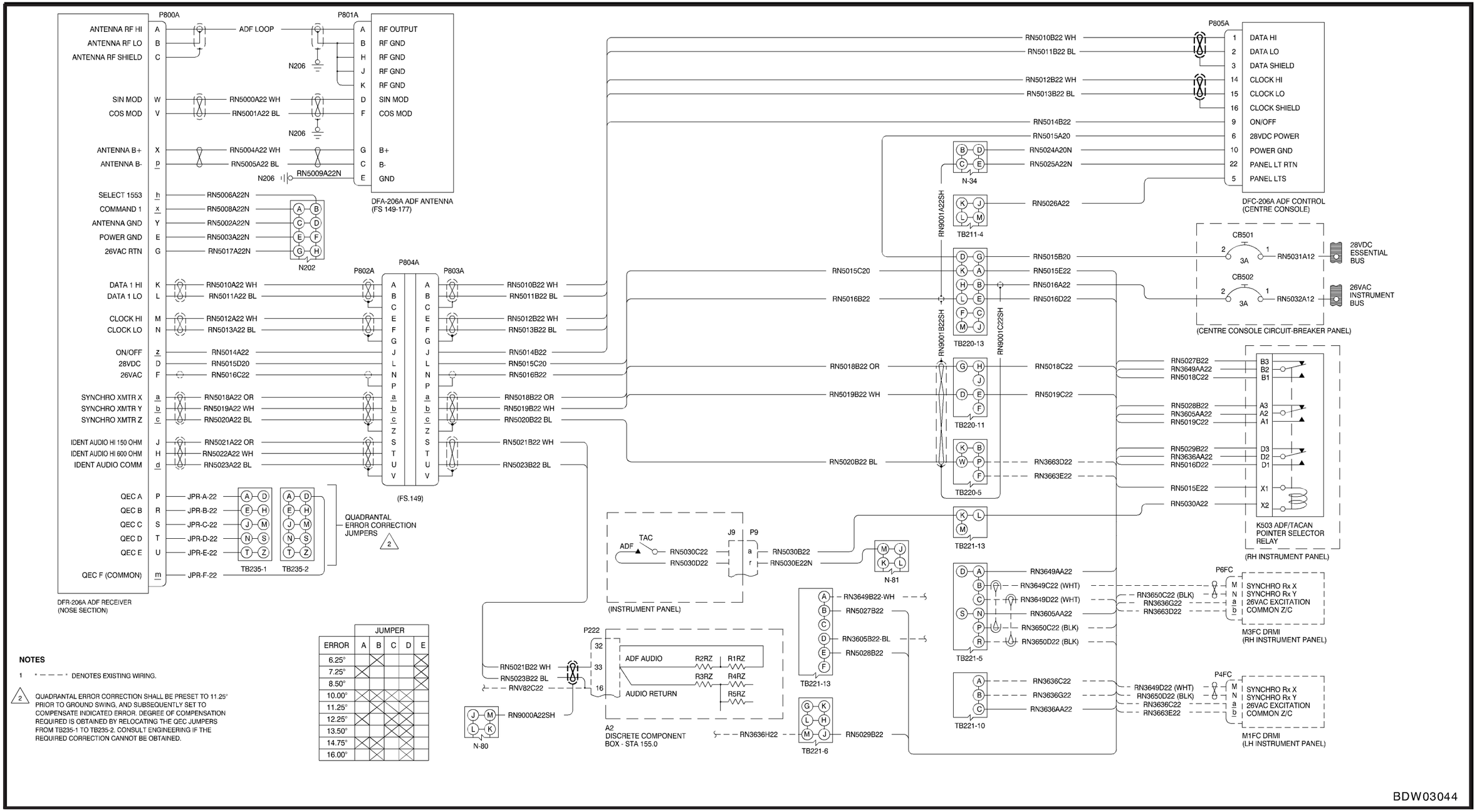

ERROR	JUMPER A	B	C	D	E
6.25°		X			X
7.25°	X				X
8.50°					X
10.00°	X		X	X	
11.25°		X		X	
12.25°	X			X	
13.50°		X		X	
14.75°	X			X	
16.00°		X		X	

NOTES

1 " — — — " DENOTES EXISTING WIRING.

2 QUADRANTAL ERROR CORRECTION SHALL BE PRESET TO 11.25° PRIOR TO GROUND SWING, AND SUBSEQUENTLY SET TO COMPENSATE INDICATED ERROR. DEGREE OF COMPENSATION REQUIRED IS OBTAINED BY RELOCATING THE QEC JUMPERS FROM TB235-1 TO TB235-2. CONSULT ENGINEERING IF THE REQUIRED CORRECTION CANNOT BE OBTAINED.

ADF-206A System – Wiring Figure 3-18

PART 4

ELECTRICAL WIRING DATA (SNOWBIRD)

GENERAL INFORMATION

GENERAL

1. Part 4 of this volume contains comprehensive information on the electrical wiring of the CT114 Snowbird aircraft only. This Part is necessary for troubleshooting the aircraft electrical systems and is best used in conjunction with the appropriate volume on system description and maintenance.

DIAGRAM

2. The wiring diagrams are listed by the titles of their respective systems in the List of Figures. They are also to be used as aids when tracing wires for troubleshooting and continuity checks.

ELECTRICAL SYMBOLS

3. See Figure 1-2 for Drawing Symbol charts.

4. For Electronics Equipment Location and Reference Designator List, refer to Part 1, Figure 1-3.

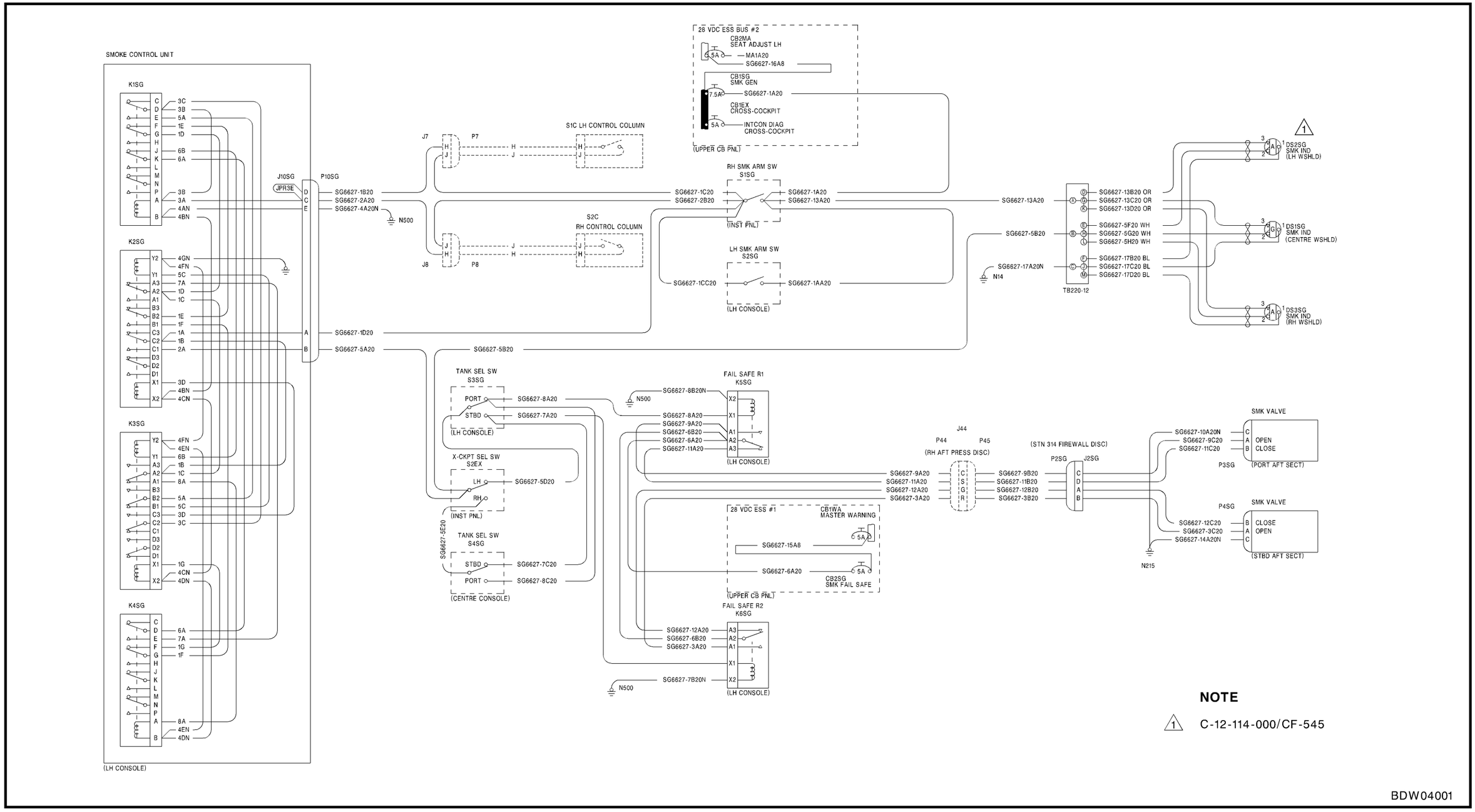

Smoke Generation System – Wiring Figure 4-1

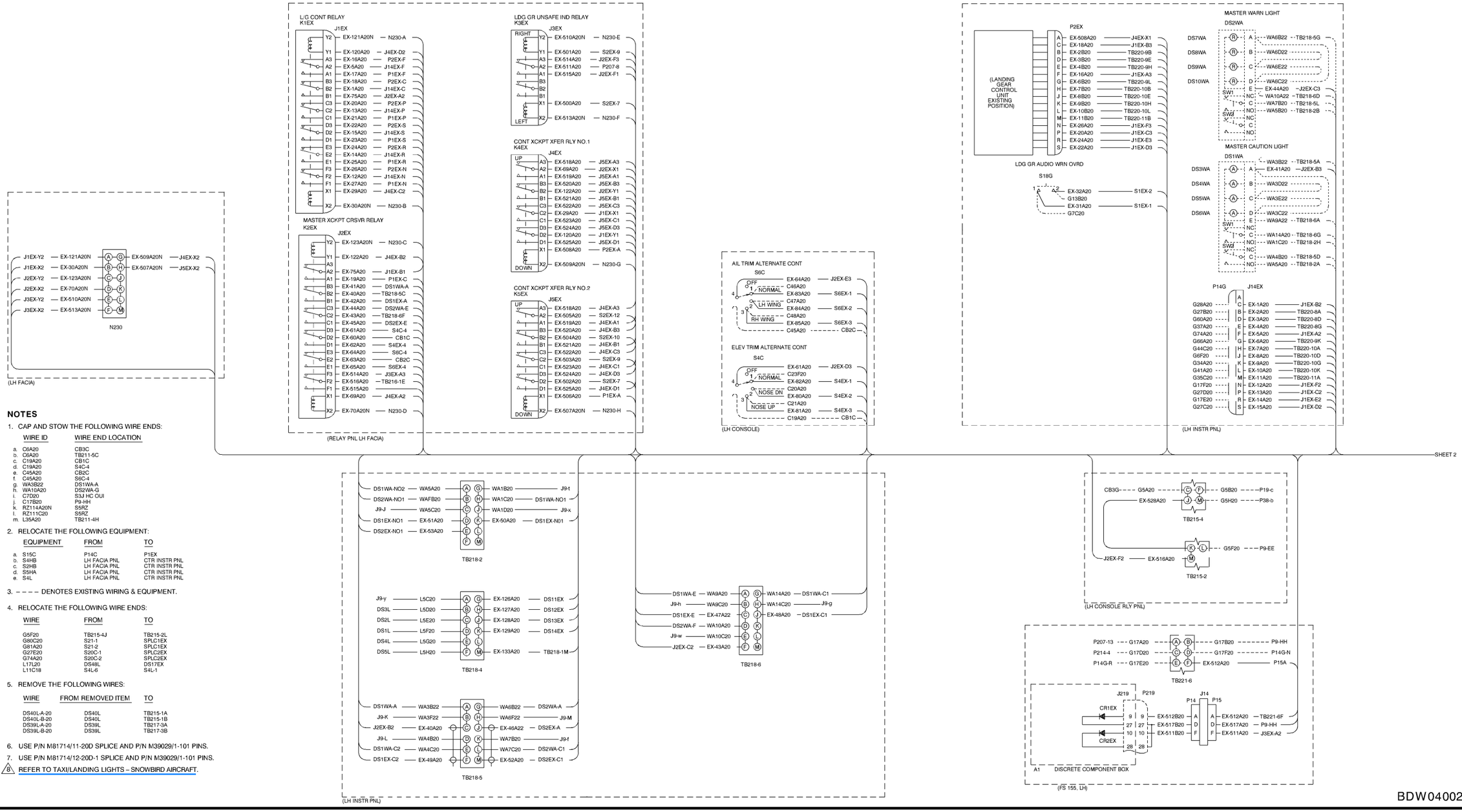

NOTES

1. CAP AND STOW THE FOLLOWING WIRE ENDS:

	WIRE ID	WIRE END LOCATION
a.	C6A20	CB3C
b.	C6A20	TB211-5C
c.	C19A20	CB1C
d.	C19A20	S4C-4
e.	C45A20	CB2C
f.	C45A20	S6C-4
g.	WA3B22	DS1WA-A
h.	WA10A20	DS2WA-G
i.	C7D20	S3J HC OUI
j.	C17B20	P9-HH
k.	RZ114A20N	S5RZ
l.	RZ111C20	S5RZ
m.	L35A20	TB211-4H

2. RELOCATE THE FOLLOWING EQUIPMENT:

	EQUIPMENT	FROM	TO
a.	S15C	P14C	P1EX
b.	S4HB	LH FACIA PNL	CTR INSTR PNL
c.	S2HB	LH FACIA PNL	CTR INSTR PNL
d.	S5HA	LH FACIA PNL	CTR INSTR PNL
e.	S4L	LH FACIA PNL	CTR INSTR PNL

3. – – – – DENOTES EXISTING WIRING & EQUIPMENT.

4. RELOCATE THE FOLLOWING WIRE ENDS:

WIRE	FROM	TO
G5F20	TB215-4J	TB215-2L
G80C20	S21-1	SPLC1EX
G81A20	S21-2	SPLC1EX
G27E20	S20C-1	SPLC2EX
G74A20	S20C-2	SPLC2EX
L17L20	DS49L	DS17EX
L11C18	S4L-6	S4L-1

5. REMOVE THE FOLLOWING WIRES:

WIRE	FROM REMOVED ITEM	TO
DS40L-A-20	DS40L	TB215-1A
DS40L-B-20	DS40L	TB215-1B
DS39L-A-20	DS39L	TB217-3A
DS39L-B-20	DS39L	TB217-3B

6. USE P/N M81714/11-20D SPLICE AND P/N M39029/1-101 PINS.
7. USE P/N M81714/12-20D-1 SPLICE AND P/N M39029/1-101 PINS.
8. REFER TO TAXI/LANDING LIGHTS – SNOWBIRD AIRCRAFT.

Intcon Diagram Cross Cockpit – Wiring (Sheet 1 of 2) Figure 4-2

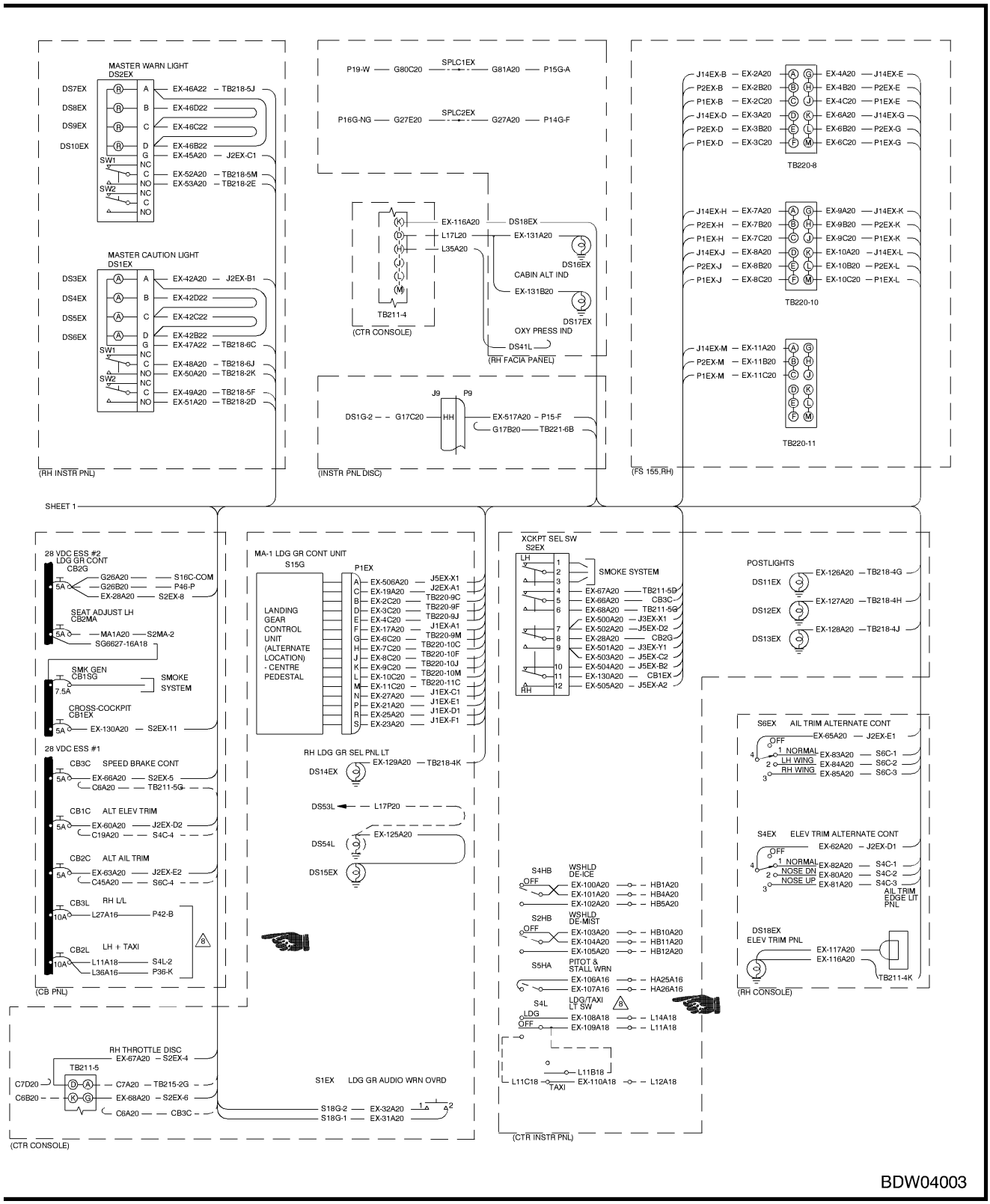

Figure 4-2 (Sheet 2 of 2) Intcon Diagram Cross Cockpit – Wiring

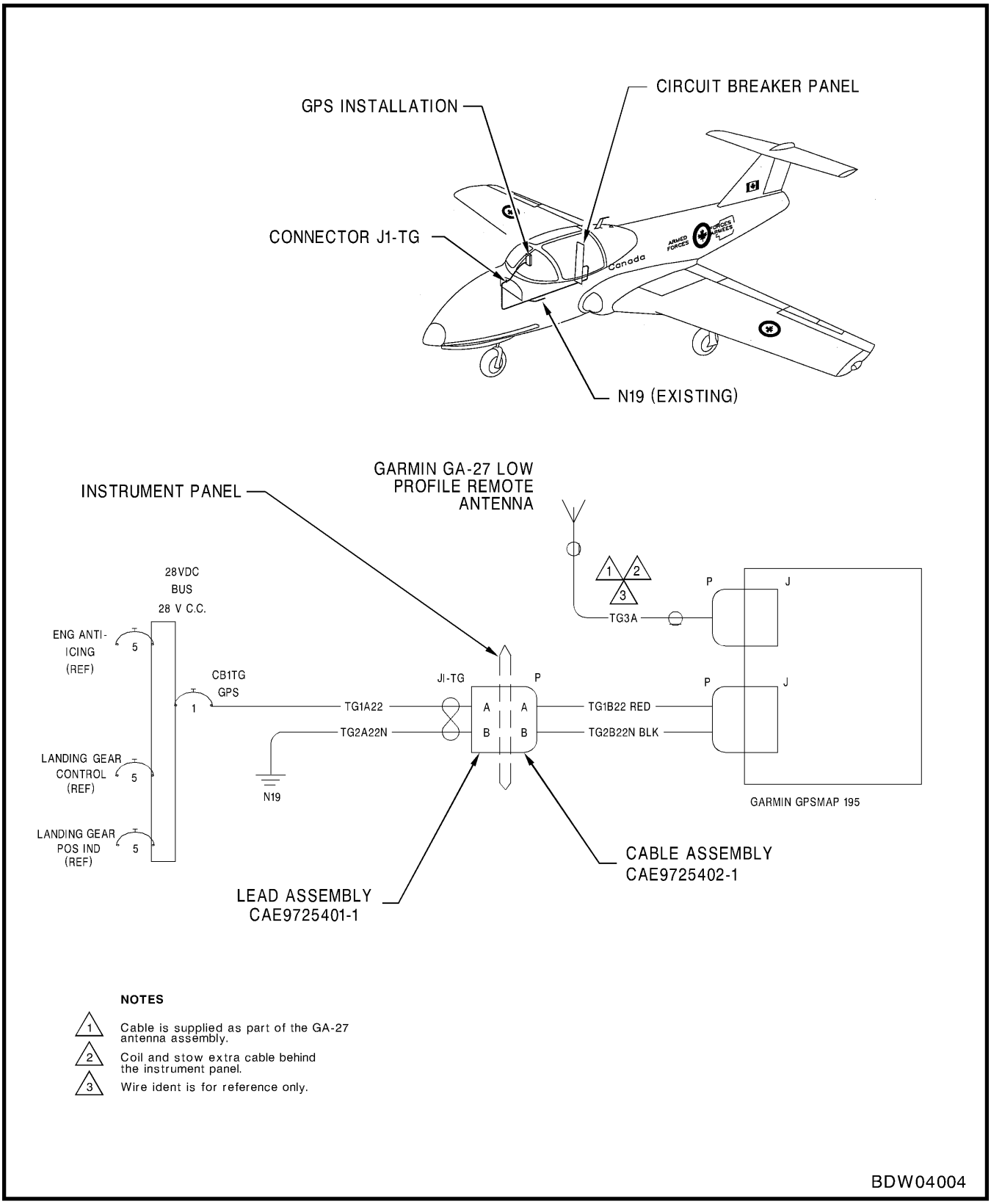

Figure 4-3 Hand-Held Global Positioning System (GPS) – Wiring

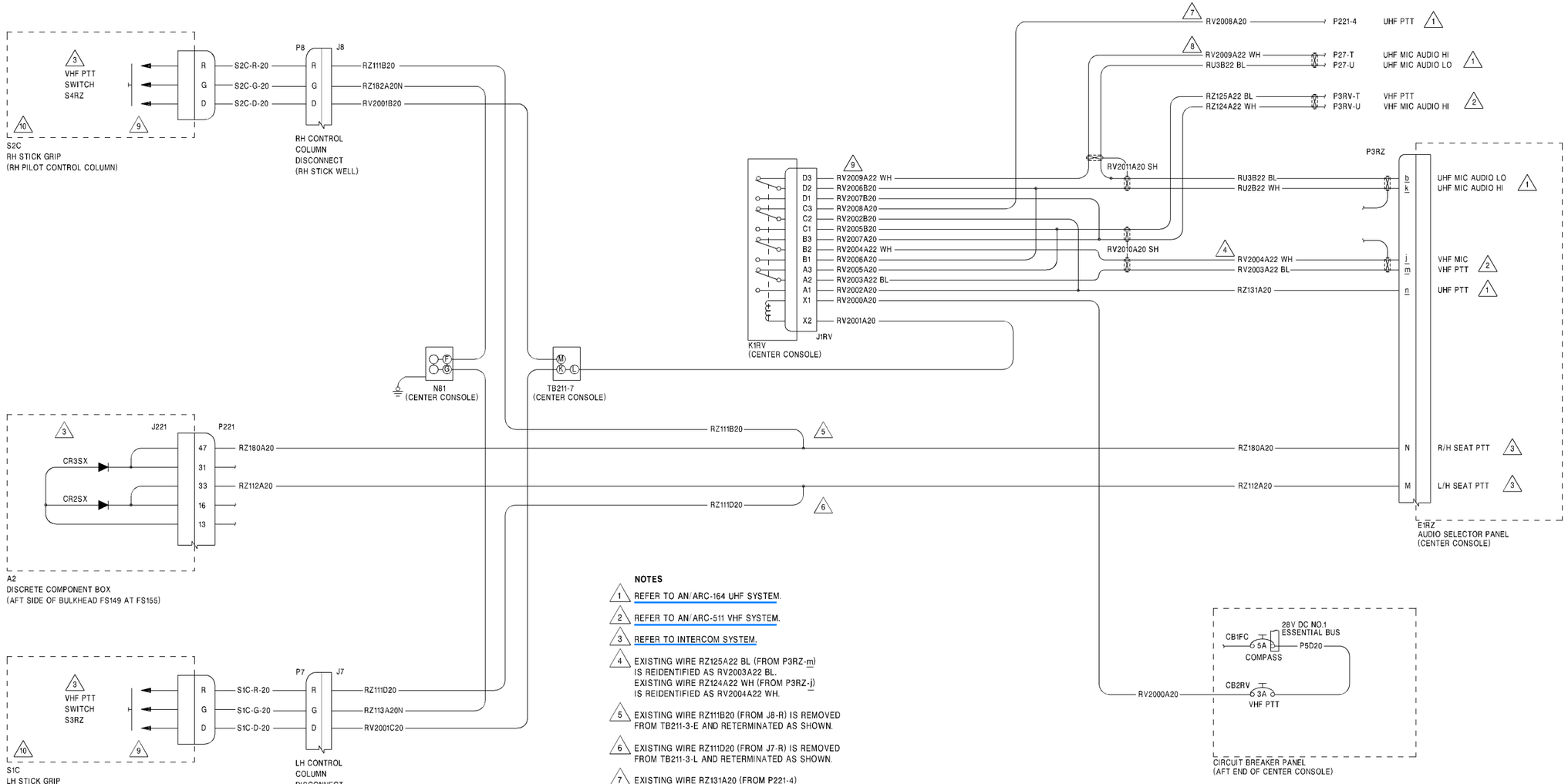

NOTES

1. REFER TO AN/ARC-164 UHF SYSTEM.
2. REFER TO AN/ARC-511 VHF SYSTEM.
3. REFER TO INTERCOM SYSTEM.
4. EXISTING WIRE RZ125A22 BL (FROM P3RZ-m) IS REIDENTIFIED AS RV2003A22 BL. EXISTING WIRE RZ124A22 WH (FROM P3RZ-j) IS REIDENTIFIED AS RV2004A22 WH.
5. EXISTING WIRE RZ111B20 (FROM J8-R) IS REMOVED FROM TB211-3-E AND RETERMINATED AS SHOWN.
6. EXISTING WIRE RZ111D20 (FROM J7-R) IS REMOVED FROM TB211-3-L AND RETERMINATED AS SHOWN.
7. EXISTING WIRE RZ131A20 (FROM P221-4) IS REIDENTIFIED AS RV2008A20.
8. EXISTING WIRE RU2B22 WH (FROM P27-T) IS REIDENTIFIED AS RV2009A22 WH.
9. FOR TERMINATING EXISTING WIRING TO RELAY K1RV AND FOR WIRING MODIFICATION TO S3RZ AND S4RZ VHF PTT SWITCHES, SEE C-12-114-000/CF-525.
10. PRIOR TO C-12-114-000/CF-525, S3RZ AND S4RZ VHF PTT SWITCHES WERE MUTING SWITCHES.

EFFECTIVITY

This page indicates CT114 aircraft modified to C-12-114-000/CF-525.

BDW04005

Interconnect Diagram VHF Press To Talk Switches – Wiring Figure 4-4

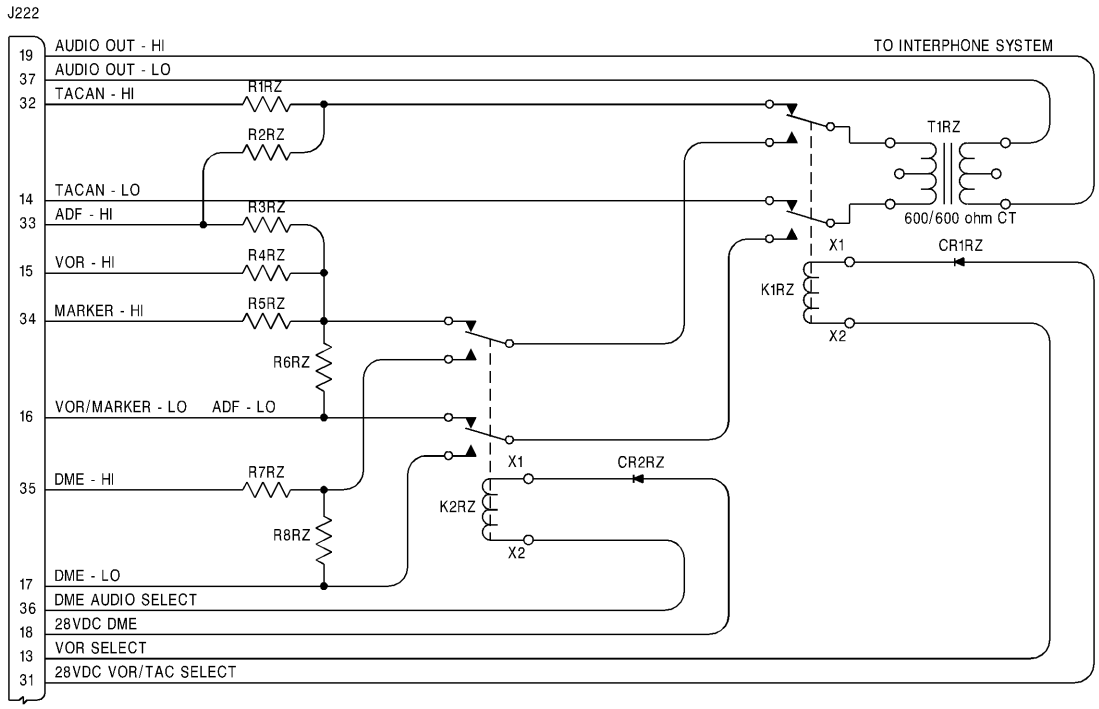

NOTES

1. R2RZ AND R3RZ ARE INSTALLED FOR ADF AUDIO IAW C-12-114-000/CD-046.
2. R7RZ AND R8RZ ARE SHOWN FOR REFERENCE ONLY. THEY ARE NOT INSTALLED.

BDW04006

Figure 4-5 Part of A2 Discrete Component Box – ADF Resistors

LIST OF ABBREVIATIONS

ACR	Anti-cycling Relay
ACT	Actuator
ACCEL	Accelerometer
ADJUST	Adjustment
AIL	Aileron
A/I	Anti-icing
AC, ac	Alternating Current
ADAPT	Adapter
AFT	After
ALT	Altitude/Altimeter/Alternate/ Alternator
AMP	Ampere
AMPL	Amplifier
ANN	Annunciator
ANT	Antenna
APPROX	Approximately
ASSY	Assembly
ATT	Attitude
AUTO	Automatic
AUX	Auxiliary
BATT	Battery
BHD	Bulkhead
BL	Buttock Line
BLKD	Bulkhead
BOOST	Booster
BRG	Bearing
CAL	Calibrate/Calibrated
CCW	Counterclockwise
CHAN	Channel
CKPT	Cockpit
C/B	Circuit-breaker
CKT BKR	Circuit-breaker
COL	Column
COM	Common
COMM	Communication
COMP	Compass
COMPT	Compartment
COND	Conditioning
CONT	Control
CUR	Current
CW	Clockwise
DC, dc	Direct Current
DETECT	Detection
DEV	Deviation
DIR	Directional
DISC	Disconnect
DISTR	Distributor/Distributing/ Distribution
DN	Down
DRMI	Directional Radio Magnetic
ECP	Engineering Change Proposal
EFF	Effectivity
EGT	Exhaust Gas Temperature
EJECT	Ejection
ELEV	Elevator
ELM	Engine Life Monitor

EMERG	Emergency
ENG	Engine
EQPT	Equipment
ESS	Essential
EXT	External/Exterior
FAT	Fatigue
FIG	Figure
FREQ	Frequency
FS	Fuselage Station
FSR	Field Shorting Relay
F/WALL	Firewall
FWD	Forward
F/W	Forward
GEN	Generator
GND, GRD	Ground
GS	Ground Speed
HDG	Heading
HI	High
HR	Hour
HSS	Horizontal Stabilizer Station
HYDR, HYD	Hydraulic
IDENT	Identity
IFF	Identification Friend or Foe
ILS	Instrument Landing System
INC	Incorporated
INCORP	Incorporated
IND	Indicator
INST	Instrument
INT	Internal/Interior/Interference
INTER	Intercom
INT'L	Interlock
INV	Inverter
I/P	Input
ISOL	Isolation
LD	Landing
LDG	Landing
LG	Landing Gear
LH	Left Hand
LHS	Left Hand Side
LO	Low
LOC	Localizer
LT/LTS	Light/Lights
MAG	Magnetic
MAX	Maximum
MDP	Main Distribution Panel
MFR	Manufacturer
MIC	Microphone
MIN	Minimum/Minute
MISC	Miscellaneous
MKR	Marker
MODS	Modifications
MON	Monitor
NAV	Navigation
NC	Normally Closed
NEG	Negative
NO	Normally Open
No.	Number
NORM	Normal
OBS	Observers
O/P	Output

O/RIDE	Override
O'LOAD	Overload
O/HEAT	Overheat
O/HT	Overheat
OVHT	Overheat
OVR	Overvoltage Relay
PD	Pedestal
PNL	Panel
POS	Positive/Position
PRESS	Pressure
PT	Part
PTT	Push-to-test
PWR	Power
QUANT	Quantity
QTY	Quantity
RCVR	Receiver
REC	Recording/Record
RECEPT	Receptacle
RECT	Rectifier
REF	Reference
REG	Regulator
REV	Reverse
RF	Radio Frequency
RH	Right Hand
RHS	Right Hand Side
S/O	Shut-off
SEL	Selector/Selection
SELECT	Selector/Selection
SIF	Signal Face
SOL	Solenoid
SPEC	Specification
STA	Station
STAB	Stabilizer
STBD	Starboard
STBY	Standby
STEER	Steering
SUBS	Subsequent
SUPP	Suppressor
SW	Switch
SYNCH	Synchronous
SYST	System
T/O	Take-off
T/OFF	Take-off
T/R	Transmitter-Receiver
TACAN	Tactical Air Navigation
TACH	Tachometer
TB	Terminal Block
TD	Time Delay
TEMP	Temperature
TKS	Tanks
TP	Test Point
TYP	Typical
UHF	Ultra High Frequency
VHF	Very High Frequency
VOR	Very High Frequency Omnidirectional and Radio Range
VSS	Vertical Stabilizer Station
W/D	Wiring Diagram
WG	Wing
WH	Wheel

W.T.	Weight
WARN	Warning
WL	Water Line
WS	Wing Station
WSHLD	Windshield
XDUCER	Transducer
XMTTR	Transmitter