National Defence | Défense nationale

C-12-114-000/MY-001

PARTS LIST

CT114 TUTOR

(ENGLISH)

Issued on Authority of the Chief of the Defence Staff
Publiée avec l'autorisation du Chef d'état-major de la Défense

OPI: DAEPM (FT) 5-2

2002-09-01
Ch 2 2005-04-01

Canada

LIST OF EFFECTIVE PAGES

Insert latest changed pages; dispose of superseded pages in accordance with applicable orders.

NOTE

The portion of the text affected by the latest change is indicated by a black vertical line in the margin of the page. Changes to illustrations are indicated by miniature pointing hands or black vertical lines.

Dates of issue for original and changed pages are:

Original	0	2002-09-01	Ch	2	2005-04-01
Ch	1	2004-04-01			

Zero in Change No. column indicates an original page. Total number of pages in this order is 753 consisting of the following.

Page No.	Change No.	Page No.	Change No.
Title	2	2-5-7	2
A to B/C	2	2-5-8 to 2-5-14	0
i to viii	0	2-5-15	2
ix/x	1	2-5-16	0
xi to xii	0	2-5-17/2-5-18	2
xiii/xiv	2	2-6-1 to 2-6-21	0
1-1 to 1-6	0	2-6-22	2
1-7 to 1-19	2	2-6-23 to 2-6-42	0
1-20 to 1-27/1-28	0	2-6-43/2-6-44	2
2-1-1 to 2-1-12	0	2-7-1 to 2-7-2	0
2-1-13	2	2-7-3	2
2-1-14 to 2-1-25	0	2-7-4 to 2-7-12	0
2-1-26	2	2-7-13	2
2-1-27 to 2-1-29/2-1-30	0	2-7-14 to 2-7-16	0
2-2-1 to 2-2-14	0	2-7-17 to 2-7-18	2
2-3-1 to 2-3-32	0	2-7-19 to 2-7-21	0
2-3-33	2	2-7-22	2
2-3-34 to 2-3-36	0	2-7-23 to 2-7-48	0
2-3-37	1	2-7-49	2
2-3-38 to 2-3-46	0	2-7-50	0
2-3-47	2	2-7-51	1
2-3-48 to 2-3-50	0	2-7-52 to 2-7-62	0
2-3-51	1	2-7-63	2
2-3-52 to 2-3-76	0	2-7-64 to 2-7-65/2-7-66	0
2-3-77	2	2-8-1 to 2-8-22	0
2-3-78 to 2-3-80	0	2-8-23	2
2-3-81/2-3-82	2	2-8-24 to 2-8-30	0
2-4-1 to 2-4-8	0	2-8-31	2
2-4-9	1	2-8-32 to 2-8-51/2-8-52	0
2-4-10 to 2-4-34	0	2-9-1 to 2-9-2	0
2-4-35	2	2-9-3	1
2-4-36	0	2-9-4 to 2-9-6	0
2-5-1 to 2-5-2	0	2-9-7	2
2-5-3	2	2-9-8	0
2-5-4	0	2-9-9	2
2-5-5	2	2-9-10 to 2-9-20	0
2-5-6	0	2-9-21	2

LIST OF EFFECTIVE PAGES (Cont)

Page No.	Change No.
2-9-22 to 2-9-24	0
2-9-25/2-9-26	2
2-10-1 to 2-10-2	0
2-10-3/2-10-4	2
2-11-1	0
2-11-2 to 2-11-5	2
2-11-6 to 2-11-7/2-11-8	0
2-12-1 to 2-12-2	0
2-12-3	2
2-12-4 to 2-12-18	0
2-12-19	2
2-12-20 to 2-12-25	0
2-12-26	2
2-12-27 to 2-12-29	0
2-12-30	2
2-12-31	0
2-12-32	1
2-12-33 to 2-12-36	2
2-12-37 to 2-12-46	0
2-12-47	2
2-12-48 to 2-12-49	0
2-12-50	2
2-12-51 to 2-12-52	0
2-12-53 to 2-12-54	2
2-12-55 to 2-12-55	0
2-12-56 to 2-12-57	2
2-12-58 to 2-12-60	0
2-12-61	2
2-12-62 to 2-12-72	0
2-12-73	2
2-12-74 to 2-12-78	0
2-12-79	2
2-12-80 to 2-12-82	0
2-12-83	2
2-12-84 to 2-12-100	0
2-12-101	2
2-12-102 to 2-12-110	0
2-12-111	2
2-12-112 to 2-12-116	0
2-12-117	2
2-12-118 to 2-12-125/2-12-126	0
2-13-1 to 2-13-4	0
2-13-5	2
2-13-6	0
2-13-7	2
2-13-8 to 2-13-14	0
2-13-15	2
2-13-16	0
2-13-17	2
2-13-18	0
2-13-19	1
2-13-20	0
2-13-21	1
2-13-22 to 2-13-24	0
2-13-25	2
2-13-26 to 2-13-32	0
2-13-33	1
2-13-34 to 2-13-38	0
2-14-1 to 2-14-6	0
2-14-7(Blank)/2-14-8 to 2-14-12	2
2-14-13 to 2-14-16	0
2-14-17	2
2-14-18 to 2-14-20	0
2-14-21	2
2-14-22 to 2-14-24	0
2-14-25	2
2-14-26	0
2-15-1 to 2-15-7/2-15-8	0
2-16-1	2
2-16-2 to 2-16-8	0
2-16-9 to 2-16-13	1
2-16-14 to 2-16-17	0
2-16-18 to 2-16-19	1
2-16-20 to 2-16-21/2-16-22	2
2-17-1 to 2-17-5/2-17-6	0
3-1 to 3-27/3-28	0
4-1	0
4-2	2
4-3 to 4-7	0
4-8	1
4-9	0
4-10	2
4-11 to 4-21	0
4-22	2
4-23 to 4-26	0
5-1 to 5-46	1
6-1 to 6-2	2

Contact Officer: DAEPM(FT) 5-2
©2002 DND/MDN Canada

CT114 TUTOR

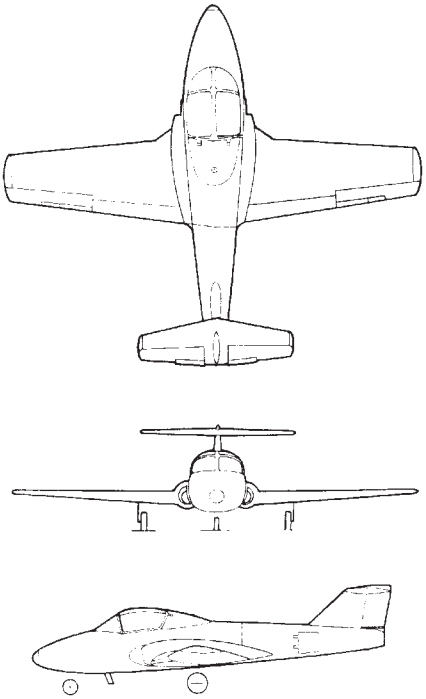

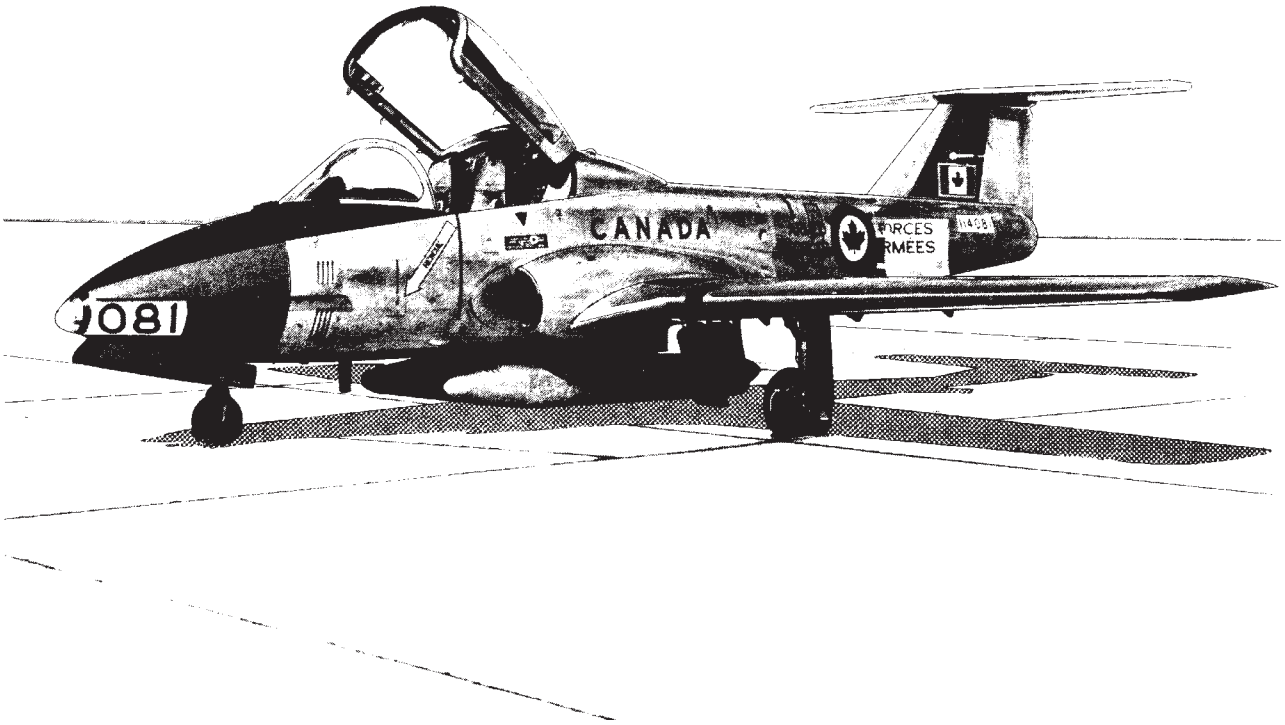

Frontispiece

TABLE OF CONTENTS

Part	Title	Page
1	Introduction	1-3
2	Part Assembly Parts List	2-1-1
3	Special Service Tool List	3-1
4	Bulk Material Chart	4-1
5	Numerical Part List	5-1

LIST OF ILLUSTRATIONS

Figure	Title	Page
	PART 1	
1-1	Tutor Aircraft General Assembly	1-26
	PART 2	
	SECTION 1 – WING	
2-1-1	Complete Wing	2-1-2
2-1-2	Complete Wing Box	2-1-4
2-1-3	Wing Box Structure	2-1-6
2-1-4	Wing Skin Panels & Flap Shroud	2-1-10
2-1-5	Aileron Shroud	2-1-14
2-1-6	Droop Snoot Fairing, Wing Leading Edge & Tip	2-1-18
2-1-7	Wing Complete Flap	2-1-22
2-1-8	Wing Complete Aileron	2-1-24
2-1-9	Aileron Spring, Trim & Geared Tabs	2-1-28
	SECTION 2 – EMPENNAGE	
2-2-1	Complete Empennage	2-2-2
2-2-2	Vertical Stabilizer & Rudder	2-2-4
2-2-3	Horizontal Stabilizer & Elevator	2-2-8
2-2-4	Elev Balance Weights, Tabs & Empennage Fairings	2-2-12
	SECTION 3 – FUSELAGE	
2-3-1	Complete Forward Fuselage	2-3-2
2-3-2	Forward Fuselage Structure	2-3-4
2-3-3	Nose Fuselage Structure	2-3-8
2-3-4	Nose Fuselage Doors	2-3-12
2-3-5	Centre Fuselage & Engine Mountings	2-3-16
2-3-6	Centre Fuselage	2-3-22
2-3-7	Cockpit Structure & Floor	2-3-30
2-3-8	Cockpit Doors, Step & Windshield	2-3-36
2-3-9	Fuselage To Wing Fairings	2-3-40
2-3-10	Canopy & Fairing	2-3-44
2-3-11	Canopy Operating & Jettison Mechanism	2-3-50
2-3-12	Canopy Hinge Mechanism	2-3-52
2-3-13	Canopy Operating Linkage	2-3-54
2-3-14	Canopy Lock	2-3-58
2-3-15	Canopy Manual Operating Crank & Flexible Drive	2-3-60
2-3-16	Canopy Jettison Mechanism	2-3-62
2-3-17	Canopy Emergency Jettison Mechanism	2-3-66
2-3-18	Centre Fuselage Access Doors	2-3-70
2-3-19	Aft Fuselage & Joint Attachment	2-3-74
2-3-20	Aft Fuselage Structure	2-3-76
2-3-21	Aft Fuselage Speed Brakes	2-3-80

LIST OF ILLUSTRATIONS (Continued)

Figure	Title	Page
	SECTION 4 – LANDING GEAR	
2-4-1	Landing Gears	2-4-2
2-4-2	Complete Landing Gear	2-4-4
2-4-3	Nose Landing Gear Shock & Drag Struts	2-4-8
2-4-4	Nose Wheel Steering	2-4-12
2-4-5	Nose Landing Gear Door Operating Mechanism	2-4-14
2-4-6	Nose Landing Gear Door	2-4-16
2-4-7	Main Landing Gear Shock Strut	2-4-18
2-4-8	Main Landing Gear Sidestay & Uplock	2-4-22
2-4-9	Main Landing Gear Operating Mechanism	2-4-26
2-4-10	Main Landing Gear Door	2-4-30
2-4-11	Main Landing Gear Leg Door & Latch Mechanism	2-4-34
	SECTION 5 – POWER PLANT	
2-5-1	Complete Power Plant	2-5-2
2-5-2	Power Plant Mounts	2-5-4
2-5-3	Jet Pipe & Drain	2-5-6
2-5-4	Power Plant Drains	2-5-10
2-5-5	Zone 1 & 2 & Generator Cooling	2-5-14
2-5-6	Zone 2 Cooling Jet Pumps	2-5-16
	SECTION 6 – FUEL SYSTEM	
2-6-1	Fuel System Schematic	2-6-2
2-6-2	Forward Fuselage Fuel System & Forward Cell	2-6-4
2-6-3	Centre Fuel Cell	2-6-8
2-6-4	Rear Fuel Cell	2-6-12
2-6-5	Fuel Collector Tank & Feed System	2-6-16
2-6-6	Fuel Vent System	2-6-20
2-6-7	Fuselage Auxiliary Fuel System	2-6-24
2-6-8	Aux Fuel Air Pressure Regulator Panel	2-6-28
2-6-9	Auxiliary Fuel Tanks & Disconnects	2-6-30
2-6-10	Fuselage Pylons – Aux Fuel or Smoke Tanks	2-6-32
2-6-11	Smoke System Tank (For Snowbird Aircraft Only)	2-6-36
2-6-12	Smoke System Piping (For Snowbird Aircraft Only)	2-6-38
2-6-13	Smoke System Pressure Regulator (For Snowbird Arcft Only)	2-6-40
2-6-14	Smoke System Pressure Regulator (For Snowbird Arcft Only, Post 114-003-00)	2-6-42
	SECTION 7 – FLIGHT CONTROLS	
2-7-1	Flight Controls	2-7-2
2-7-2	Forward Fuselage Bellcrank & Levers	2-7-4
2-7-3	Forward Fuselage Control Rods	2-7-8
2-7-4	Cockpit Rudder & Brake Controls	2-7-12
2-7-5	Cockpit Rudder & Brake Controls	2-7-16
2-7-6	Control Column	2-7-20
2-7-7	Cockpit Flight Control Levers	2-7-24
2-7-8	Aileron Controls	2-7-26

LIST OF ILLUSTRATIONS (Continued)

Figure	Title	Page
2-7-9	Aileron Tab Controls	2-7-30
2-7-10	Power & Flap Controls	2-7-34
2-7-11	Power & Flap Control Box	2-7-38
2-7-12	Centre Console Power & Flap Levers	2-7-42
2-7-13	Flap Follow Up System Mechanism	2-7-44
2-7-14	Flap Interconnect	2-7-48
2-7-15	Aft Fuselage Bellcrank & Levers	2-7-50
2-7-16	Aft Fuselage Control Rods	2-7-54
2-7-17	Elevator Control Rods & Torque Tube	2-7-58
2-7-18	Elevator Trim & Geared Tab Controls	2-7-62
2-7-19	Cross Cockpit Throttle Quadrant Mod (For Snowbird Aircraft Only)	2-7-64
	SECTION 8 – HYDRAULIC SYSTEM	
2-8-1	Hydraulic System	2-8-2
2-8-2	Complete Hydraulic System	2-8-4
2-8-3	Nose Wheel Well Hydraulic System	2-8-6
2-8-4	Fuselage Station 149-206 Hydraulic System	2-8-10
2-8-5	Landing Gear Emergency Valve Control	2-8-14
2-8-6	Brake Hydraulic System	2-8-16
2-8-7	Fuselage Station 206-277 Hydraulic System	2-8-20
2-8-8	Engine Compartment Hydraulic System	2-8-22
2-8-9	Engine Compartment Hydraulic Valves & Filters	2-8-26
2-8-10	Engine Compartment Hydraulic System	2-8-30
2-8-11	Wing Fillet Hydraulic System	2-8-34
2-8-12	Main Landing Gear & Door Hydraulic System	2-8-38
2-8-13	Flap Actuator Hydraulic System	2-8-44
2-8-14	Speedbrake Actuator & Hydraulic Lines	2-8-46
2-8-15	Cross Cockpit Hand Pump & Hydr Piping (For Snowbird Arcft Only)	2-8-48
2-8-16	Cross Cockpit Ldg Gear Emer Valve Control Mod (For Snowbird Aircraft Only)	2-8-50
	SECTION 9 – HEAT & VENT & PRESSURIZATION SYSTEM	
2-9-1	Heat & Vent & Pressurization System	2-9-2
2-9-2	Complete Heat & Vent & Pressurization System	2-9-4
2-9-3	Pressure Regulator, Dump Valve & Static Lines	2-9-6
2-9-4	Windshield Rain Removal System	2-9-8
2-9-5	Cockpit Heat Distribution & Ram Air	2-9-12
2-9-6	Cockpit Canopy Seal System	2-9-16
2-9-7	Water Separator & Distribution System	2-9-20
2-9-8	Engine to Firewall Bleed Air System	2-9-24
	SECTION 10 – ANTI ICING SYSTEM	
2-10-1	Windshield & Canopy Demist Systems	2-10-2
	SECTION 11 – OXYGEN SYSTEM	
2-11-1	Complete Oxygen System	2-11-2
2-11-2	Cross Cockpit Oxygen Pressure Line (For Snowbird Aircraft Only)	2-11-6

LIST OF ILLUSTRATIONS (Continued)

Figure	Title	Page
	SECTION 12 – ELECTRICAL EQUIPMENT	
2-12-1	Electrical System	2-12-2
2-12-2	Rewire General Assembly (Electrical)	2-12-4
2-12-3	Nose Compartment Electrical Equipment	2-12-8
2-12-4	Nose Compartment Electrical Equipment (Load Monitoring System)	2-12-16
2-12-5	Storage Batteries	2-12-18
2-12-6	Main Distribution & Relay Panels	2-12-20
2-12-7	Nose Compartment Electrical Harnesses	2-12-28
2-12-8	Fuselage Trough Harnesses & Attachments	2-12-36
2-12-9	Cockpit Electrical Equipment	2-12-42
2-12-10	Forward Cockpit Electrical Equipment	2-12-46
2-12-11	Port Console Electrical Equipment	2-12-48
2-12-12	Starboard Console Electrical Equipment	2-12-52
2-12-13	Centre Console Electrical Equipment	2-12-56
2-12-14	Centre Console Electrical Equipment	2-12-60
2-12-15	Centre Console Circuit Breaker Panel	2-12-64
2-12-16	Instrument Panel Shroud Lights	2-12-66
2-12-17	Cockpit Electrical Harnesses	2-12-68
2-12-18	Centre Fuselage Electrical Equipment.	2-12-78
2-12-19	Forward Fuselage Instrument Equipment (Load Monitoring System)	2-12-82
2-12-20	Wing Fillet Electrical Harness	2-12-84
2-12-21	Wing Fillet Electrical Harness (Load Monitoring System)	2-12-90
2-12-22	Power Plant Electrical Equipment	2-12-92
2-12-23	Wing Electrical Equipment	2-12-98
2-12-24	Wing Electrical Harnesses	2-12-104
2-12-25	Rear Fuselage Electrical Equipment	2-12-110
2-12-26	Rear Fuselage Electrical Equipment (Load Monitoring System).	2-12-116
2-12-27	Smoke System Electrical (For Snowbird Aircraft Only)	2-12-118
2-12-28	Smoke System Wiring (For Snowbird Arcft Only)	2-12-122
2-12-29	Cross Cockpit Electrical Mod (For Snowbird Arcft Only)	2-12-124
	SECTION 13 – ELECTRONIC EQUIPMENT	
2-13-1	Underwater Acoustic Locator Beacon.	2-13-2
2-13-2	Nose Compartment Electronics & Antennas	2-13-4
2-13-3	Nose Compartment Electronic Harnesses.	2-13-14
2-13-4	Cockpit Electronic Equipment	2-13-24
2-13-5	Cockpit Electronic Harnesses	2-13-30
2-13-6	Automatic Direction Finding System – DF-206A	2-13-34
	SECTION 14 – INSTRUMENT EQUIPMENT	
2-14-1	Cockpit Instrument Equipment	2-14-2
2-14-2	Instrument Panel	2-14-8
2-14-3	Forward Fuselage Instrument Equipment	2-14-14
2-14-4	Centre Fuselage Instrument Equipment	2-14-16
2-14-5	Cross Cockpit Instrument Panel Mod (For Snowbird Arcft Only)	2-14-20
2-14-6	LH & RH Facia Panel (For Snowbird Arcft Only)	2-14-22
2-14-7	Handheld GPS Mounting Assy	2-14-24

LIST OF ILLUSTRATIONS (Continued)

Figure	Title	Page
	SECTION 15 – PITOT STATIC SYSTEM	
2-15-1	Cockpit Area Pitot Static System	2-15-2
2-15-2	Wing Pitot Static System	2-15-6
	SECTION 16 – FURNISHINGS EQUIPMENT	
2-16-1	Cockpit Furnishings	2-16-2
2-16-2	Cockpit Lining & Trim	2-16-6
2-16-3	Ejection Seats	2-16-10
2-16-4	Ejection Seats	2-16-14
2-16-5	Ejection Seats – AERO Rigid Arm Drogue (ARAD) Installation	2-16-18
	SECTION 17 – LOOSE EQUIPMENT	
2-17-1	Probe Cover, Lock & Release Pins	2-17-2
2-17-2	Seat & Canopy Safety Pins	2-17-4
	PART 3	
3-1	Tow Bar, Bridle & Tether Cable	3-2
3-2	Engine Stands, Jacks & Cables	3-4
3-3	Engine Floor Stand & Slings	3-6
3-4	Rig Pins Initiator Dummy & Gauges	3-10
3-5	Flap, Aileron & Spring Tab Rig Nboards	3-14
3-6	Rigging Pins.	3-16
3-7	Special Tools & Adaptors	3-20
3-8	Canopy Strut, Dummy Catapult & Initiator	3-24
3-9	Blanking Plugs	3-26

MODIFICATION STATUS OF THIS CFTO

MOD	ECP	STATUS
5/2		INC
5/17		INC
5/23		INC
5/26		INC
5/37		INC
5/46		INC
5/49		INC
5/54		INC
5/56		INC
5/84		INC
5/98		INC
5A/4		INC
5A/9		INC
5A/15		INC
5A/16		INC
5A/19	227	INC
5A/22		INC
5A/24		INC
6A/1		C
6A/2	24	RES
6A/3	30	RES
6A/4	17	RES
6A/5	31	RES
6A/6	34	RES
6A/7	32	RES
6A/8	33	RES
6A/9	36	INC
6A/10	44	RES
6A/11	27	RES
6A/12	46	RES
6A/13		C
6A/14	40	RES
6A/15	42	RES
6A/16	39	RES
6A/17	15	RES
CF-018	1	INC
6A/19	41	RES
6A/20	47	RES
6A/21	51	RES
6A/22		R
6A/23	45	RES
6A/24		C
6A/25	68	RES
6A/26	61	RES
6A/27	66	RES
6A/28	60	RES
6A/29	62	RES
6A/30	65	RES
6A/31	55	RES
6A/32	59	RES
CF-033	67	INC
6A/34	77	RES
6A/35	71	RES
6A/36	72	RES
6A/37	73	RES
6A/38	76	RES
6A/39	78	RES
6A/40	74	R
6A/41	75	RES

MOD	ECP	STATUS
6A/42	56	RES
6A/43	58	RES
6A/44	54	RES
6A/45		C
6A/46	89	RES
6A/47	91	RES
6A/48	90	RES
6A/49	94	RES
6A/50	80	RES
6A/51	81	RES
6A/52	83	RES
6A/53		RES
6A/54	93	RES
6A/55	84	RES
6A/56		C
6A/57	113	RES
6A/58	112	RES
6A/59	82	RES
6A/60	120	RES
6A/61	100	RES
6A/62		RES
6A/63	114	RES
6A/64	98	RES
6A/65	95	RES
6A/66	109	RES
6A/67		C
6A/68	119	RES
6A/69	104	RES
6A/70		C
6A/71	99	RES
6A/72	118	RES
6A/73	85	RES
6A/74	101	RES
6A/75	103	RES
6A/76	96	RES
6A/77		C
6A/78	50	RES
6A/79	110	RES
6A/80		R
6A/81	129	RES
6A/82	122	RES
6A/83	126	RES
6A/84	136	RES
6A/85		RES
6A/86	141	RES
6A/87	140	RES
6A/88	128	RES
6A/89	134	RES
6A/90	125	RES
6A/91		C
6A/92	10	RES
6A/93	144	RES
6A/94	130	RES
6A/95	142	RES
6A/96	143	RES
6A/97		RES
6A/98		NA
6A/99		C
6A/100	150	RES
6A/101	151	RES

MOD	ECP	STATUS
6A/102	152	RES
6A/103	148	RES
6A/104	108	RES
6A/105		RES
6A/106		R
6A/107	106	RES
6A/108	111	RES
6A/109	147	RES
6A/110	208	RES
6A/111		RES
6A/112	137	INC
6A/113	153	RES
6A/114	155	RES
6A/115	156	RES
6A/116	159	RES
6A/117		C
6A/118	163	R
6A/119		C
6A/120		C
6A/121	133	RES
6A/122		C
6A/123	193	RES
6A/124	192	RES
6A/125	79	RES
6A/126	168	RES
6A/127		R
6A/128	124	RES
6A/129	167	RES
6A/130	170	RES
6A/131	166	RES
6A/132		RES
6A/133		RES
6A/134		RES
6A/135	171	RES
6A/136		RES
6A/137		RES
6A/138	157	RES
CF-139	173	INC
6A/140	158	RES
6A/141	169	RES
6A/142	177	RES
6A/143	178	RES
6A/144	179	RES
6A/145	180	RES
6A/146	165	RES
6A/147	172	RES
6A/148	182	RES
6A/149	183	NA
6A/150		C
6A/151		C
6A/152	186	RES
6A/153	57	RES
6A/154	131	RES
6A/155	187	NA
6A/156	188	RES
6A/157		C
6A/158	189	RES
6A/159	191	RES
6A/160		RES
6A/161		RES

MOD	ECP	STATUS
6A/162	175	RES
6A/163		C
6A/164		RES
6A/165		C
6A/166	194	RES
6A/167	195	RES
6A/168	210	INC
6A/169		RES
6A/170		RES
6A/171		RES
6A/172		RES
6A/173		R
6A/174		C
6A/175	211	RES
6A/176	205	RES
6A/177		R
6A/178		R
6A/179	200	RES
6A/180	200	RES
6A/181	200	RES
6A/182	200	RES
6A/183	200	RES
6A/184	200	RES
6A/185	200	RES
6A/186		C
6A/187	200	INC
6A/188	200	RES
6A/189		RES
6A/190	201	RES
6A/191	203	RES
6A/192	204	RES
6A/193		RES
6A/194		RES
6A/195	209	RES
6A/196	206	RES
6A/197	181	RES
6A/198		R
6A/199	212	RES
6A/200		RES
6A/201		RES
6A/202		RES
6A/203	198	RES
6A/204		RES
6A/205		C
6A/206		R
6A/207	216	RES
6A/208		RES
6A/209		RES
6A/210		RES
6A/211	217	RES
6A/212		RES
6A/213		RES
6A/214	219	RES
6A/215		C
6A/216		C
6A/217		RES
6A/218	225	RES
6A/219		RES
6A/220		C
6A/221	223	R

(Sheet 1)

INC	Modification incorporated in this CFTO
NA	Modification not applicable to CFTO
C	Modification cancelled
R	Modification replaced by other modification
RES	Rescinded

MODIFICATION STATUS OF THIS CFTO

MOD	ECP	STATUS
6A/222		RES
6A/223		RES
6A/224		RES
6A/225		RES
6A/226	115	RES
6A/227		RES
6A/228		R
6A/229		RES
6A/230		RES
6A/231		C
6A/232		RES
6A/233		RES
6A/234		RES
6A/235		RES
6A/236	207	RES
CF-237		INC
6A/238		R
6A/239		RES
6A/240	214	RES
6A/241		RES
CF-242		RES
CF-243		RES
6A/244		RES
6A/245		RES
CF-246		INC
6A/247		NA
6A/248		RES
6A/249		RES
6A/250		RES
6A/251		NA
CF-252		RES
6A/253		RES
6A/254		RES
6A/255		NA
6A/256		RES
6A/257		RES
CF-258		RES
6A/259		INC
6A/260		RES
6A/261		NA
6A/262		RES
6A/263		INC
CF-264		INC
6A/265		NA
6A/266		RES
6A/267		RES
6A/268		RES
6A/269		C
6A/270		NA
6A/271		INC
6A/272		C
6A/273		RES
6A/274		INC
6A/275		NA
6A/276		R
6A/277		R
CF-278		INC
6A/279		NA
6A/280		C
6A/281		R

MOD	ECP	STATUS
CF-282		INC
6A/283		C
CF-284		INC
6A/285		NA
6A/286		C
6A/287		INC
6A/288		NA
6A/289		C
6A/290		C
6A/291		R
CF-292		INC
CF-293		INC
6A/294		C
6A/295		INC
6A/296		INC
6A/297		R
6A/298		R
6A/299		INC
6A/300		NA
CF-301		INC
6A/302		NA
6A/303		INC
6A/304		INC
6A/305		C
6A/306		INC
6A/307		NA
6A/308		NA
6A/309		NA
6A/310		INC
CF-311		INC
6A/312		R
CF-313		INC
6A/314		INC
CF-315		INC
6A/316		NA
6A/317		INC
6A/318		INC
CF-319		INC
CF-320		INC
CF-321		INC
6A/322		NA
6A/323		C
6A/324		NA
CF-325		INC
6A/326		INC
6A/327		R
6A/328		R
CF-329		INC
CF-330		INC
CF-331		INC
CF-332		INC
CF-333		INC
CF-334		INC
6A/335		INC
6A/336		NA
6A/337		INC
CF-338		INC
CF-339		INC
CF-340		INC
6A/341		INC

MOD	ECP	STATUS
6A/342		NA
6A/343		INC
6A/344		INC
6A/345		INC
CF-346		INC
6A/347		INC
6A/348		INC
6A/349		NA
6A/350		INC
CF-351		INC
CF-352		INC
CF-353		INC
CF-354		INC
CF-355		R
CF-356		INC
CF-357		INC
CF-358		C
CF-359		NA
CF-360		INC
CF-361		INC
CF-362		R
CF-363		INC
CF-364		INC
CF-365		INC
CF-366		RES
CF-367		NA
CF-368		INC
CF-369		NA
CF-370		INC
CF-371		INC
CF-372		INC
CF-373		INC
CF-374		INC
CF-375		RES
CF-376		INC
CF-377		NA
CF-378		INC
CF-379		INC
CF-380		RES
CF-381		NA
CF-382		INC
CF-383		INC
CF-384		NA
CF-385		INC
CF-386		NA
CF-387		INC
CF-388		NA
CF-389		INC
CF-390		NA
CF-391		NA
CF-392		INC
CF-393		INC
CF-394		NA
CF-395		INC
CF-396		INC
CF-397		INC
CF-398		INC
CF-399		INC
CF-400		INC
CF-401		INC

MOD	ECP	STATUS
CF-402		INC
CF-403		INC
CF-404		NA
CF-405		NA
CF-406		R
CF-407		INC
CF-408		NA
CF-409		C
CF-410		INC
CF-411		INC
CF-412		NA
CF-413		R
CF-414		INC
CF-415		NA
CF-416		INC
CF-417		NA
CF-418		INC
CF-419		INC
CF-420		INC
CF-421		INC
CF-422		INC
CF-423		INC
CF-424		INC
CF-425		R
CF-426		INC
CF-427		R
CF-428		INC
CF-429		NA
CF-430		INC
CF-431		INC
CF-432		INC
CF-433		INC
CF-434		INC
CF-435		NA
CF-436		INC
CF-437		INC
CF-438		INC
CF-439		INC
CF-440		INC
CF-441		INC
CF-442		INC
CF-443		INC
CF-444		INC
CF-445		INC
CF-446		INC
CF-447		INC
CF-448		INC
CF-449		INC
CF-450		INC
CF-451		INC
CF-452		
CF-453		R
CF-454		NA
CF-455		
CF-456		INC
CF-457		INC
CF-458		INC
CF-459		
CF-460		INC
CF-461		INC

(Sheet 2)

INC	Modification incorporated in this CFTO
NA	Modification not applicable to CFTO
C	Modification cancelled
R	Modification replaced by other modification
RES	Rescinded

MODIFICATION STATUS OF THIS CFTO

MOD	ECP	STATUS	MOD	ECP	STATUS	MOD	ECP	STATUS	MOD	ECP	STATUS
CF-462		INC	CF-527		INC						
CF-463		INC	CF-528		INC				6B/1		INC
CF-464		INC	CF-529		INC				6B/2		INC
CF-465		INC	CF-530		INC				6B/3		INC
CF-466			CF-531		INC				CD-004		INC
CF-467		INC	CF-542		INC				6B/5		INC
CF-468			CF-543		INC				CD-006		INC
CF-469		INC	CF-544		NA				6B/7		NA
CF-470			CF-545		INC				6B/8		INC
CF-471		INC	CF-550		INC				6B/9		INC
CF-472		INC	CF-553		INC				6B/10		INC
CF-473		INC							6B/11		INC
CF-474									6B/12		C
CF-475		INC							6B/13		INC
CF-476		INC							6B/14		NA
CF-477		INC							6B/15		NA
CF-478									6B/16		NA
CF-479		INC							6B/17		NA
CF-480									6B/18		NA
CF-481									CD-019		INC
CF-482		INC							CD-020		INC
CF-483									6B/21		
CF-484									6B/22		C
CF-485									6B/23		
CF-486									6B/24		
CF-487		INC							6B/25		INC
CF-488		INC							6B/26		
CF-489									6B/27		
CF-490									6B/28		
CF-491		INC							CD-029		C
CF-492									CD-030		INC
CF-493									CD-031		INC
CF-494									CD-046		INC
CF-495									CS-037		INC
CF-496									CS-065		INC
CF-497									CS-069		INC
CF-498									CS-071		INC
CF-499									NS-208		INC
CF-500									NS-212		INC
CF-501		INC									
CF-502											
CF-503											
CF-504		C									
CF-505		INC									
CF-506											
CF-507											
CF-508											
CF-509		INC									
CF-510											
CF-511											
CF-512											
CF-513											
CF-514											
CF-515		INC									
CF-518		INC									
CF-520		INC									
CF-522		INC									
CF-524		INC									
CF-525		INC									
CF-526		INC									

(Sheet 3)

INC	Modification incorporated in this CFTO
NA	Modification not applicable to CFTO
C	Modification cancelled
R	Modification replaced by other modification
RES	Rescinded

PART 1

INTRODUCTION

TABLE OF CONTENTS

Para	Title	Page
	FOREWORD	
1	General	1-3
2	Purpose of the Part List	1-3
3	Constituent Element	1-3
4	Limitations	1-3
	CODING	
5	General	1-3
6	Vendor Items	1-3
7	Government Supplied Material	1-3
8	Specification Standards	1-3
	USAGE CODE	
9	General	1-3
10	Page Numbering	1-3
	GROUP ASSEMBLY PART LIST	
11	Part 2 Sectioning	1-3
12	Figure and Index Column	1-4
13	Part Number Column	1-4
14	Nomenclature Column	1-4
15	Usage Code Column	1-4
16	Units Per Assembly Column	1-4
17	Indention	1-4
18	Multi Assembly Breakdown	1-4
19	Alternative Parts	1-4
20	Spare Parts	1-4
21	Controlled Interchangeable Parts and Assemblies	1-4
22	Controlled Replaceable Parts and Assemblies	1-4
23	Referencing	1-4
24	Continued Breakdowns	1-4
26	Handed Assemblies	1-4
27	Attaching Parts	1-5
28	Purchased Parts	1-5
29	Canadair Specification Control Drawing	1-5
	ILLUSTRATIONS	
30	General	1-5
31	Exploded Views	1-5
32	System Illustrations	1-5
	DRAWING NUMBERING SYSTEM	
33	General	1-5
34	Model Number	1-5
35	Basic Function Number	1-5

TABLE OF CONTENTS (Continued)

Para	Title	Page
	FINDING AN ITEM IN THE PART LIST	
36	General	1-5
37	Finding an Item when Part Number is Known	1-5
38	Finding an Item when Part Number is Unknown	1-5
	SPECIAL SERVICE TOOLS	
39	General	1-6
	BULK MATERIAL CHART	
40	General	1-6
42	Listing Arrangement	1-6
43	Tube Dimensions	1-6
44	Material Specification	1-6
	NUMERICAL PART LIST	
45	General	1-6
46	Part Number Column	1-6
47	Figure and Index Column	1-6
48	Quantity Column	1-6
49	Alternative Part Numbers	1-6
	NOMENCLATURE ABBREVIATIONS AND CONTRACTIONS	
50	General	1-6

List	Title	
1	Proprietary Names and Addresses	1-7
2	Abbreviations and Contractions	1-20

Chart	Title	
1	Tutor Aircraft General Arrangement	1-23
2	Tutor Aircraft Stations	1-24

Figure	Title	
1-1	Tutor Aircraft General Assembly	1-26

PART 1

INTRODUCTION

FOREWORD

GENERAL

1. This part is applicable to the Canadian Forces Tutor aircraft, manufactured by Canadair Limited, Montreal, Quebec, Canada.

NOTE

This publication contains information pertaining to CT114 Tutor aircraft rewired in accordance with C-12-114-000/CD-036. For information regarding a pre-rewired aircraft, refer to C-12-114-000/MY-000.

PURPOSE OF THE PART LIST

2. The part list has been prepared to identify parts for the ordering of spares.

CONSTITUENT ELEMENT

3. This part list describes the procurable items installed on the aircraft, according to engineering drawings, and includes modifications requested by the Canadian Forces.

LIMITATIONS

4. The part list is not an authority for assembly or disassembly.

CODING

GENERAL

5. To conserve space and facilitate quick reference, codes are used for vendor items, government supplied parts, and Canadair standard parts.

VENDOR ITEMS

6. Vendor code numbers are used in the numenclature column of the Detailed Parts List to identify the manufacturer of a part that is purchased by the contractor manufacturing the aircraft. Five-digit Manufacturers' codes are preceded by the letter ″V″. The manufacturer codes are those listed in the Canadian Government Catalog of Materiel A-LM-137-COM/LX-001. A complete list of the Manufacturers' codes used in the detailed Parts List are listed in List 1 of this introduction.

GOVERNMENT SUPPLIED MATERIAL

7. Government supplied material are indicated by (G.S.M.).

SPECIFICATION STANDARDS

8. Following is a list of approved standard designations:

STANDARDS	DESIGNATION
a. Military Standards	MS
b. Air Force-Navy	AN
c. United States Air Force	USAF
(1) Air Force	AF
(2) Army-Air Force	AAF
(3) Naval Aircraft Factory	NAF
d. National Aircraft Standards Committee	NAS

USAGE CODE

GENERAL

9. A usage code indicates parts limited to specific aircraft.

NOTE

Parts without a usage code are applicable to all aircraft.

PAGE NUMBERING

10. Pages are numbered consecutively within Part 1.

GROUP ASSEMBLY PART LIST

PART 2 SECTIONING

11. Part 2, the group assembly part list, is divided into sections, numbered consecutively. Each section, such as wing, landing gear, fuel system, electrical system, etc., lists all the installations, assemblies and detail parts. Pages are numbered consecutively within each Section.

FIGURE AND INDEX COLUMN

12. This column contains the figure and index numbers. Index numbers are listed against items for identification on the illustration.

PART NUMBER COLUMN

13. In addition to part numbers, specification and type numbers are given where applicable. Detail parts which have been fabricated into a permanent assembly are not listed.

NOMENCLATURE COLUMN

14. The nomenclature has been taken from the engineering drawing title block. Additional descriptive information, such as function, location, size, etc., may appear in parentheses.

USAGE CODE COLUMN

15. Parts with usage limitations are coded as per Paragraph 9, preceding.

UNITS PER ASSEMBLY COLUMN

16. Requirements shown in the Units per Assembly column are per installation or assembly detail. Installations which are non-procurable, carry the letters NP. Items used as required carry a quantity of 1 in the Units per Assembly column and (AS REQUIRED) in the nomenclature. REF indicates that the item is referenced as per Paragraphs 22 and 23 following.

INDENTION

17. The item title indention in the nomenclature of the group assembly part list indicates the relationship between details and assemblies. To determine parts which may be stocked as assemblies or details of assemblies, the indention of the nomenclature is used. Thus, component parts which are assembled upon another installation or assembly are listed with the nomenclature starting one column to the right. The detail part of assembly must be within the same effectivity range as the pertinent next assembly.

MULTI ASSEMBLY BREAKDOWN

18. When several assemblies are listed consecutively due to different locations or effectivities, the detail parts for these assemblies, if any, are listed following the last assembly and are applicable to all these assemblies. The effectivity code will relate the detail part to its next assembly.

ALTERNATIVE PARTS

19. An alternative part follows the part it may replace, separated by the word OR in the Nomenclature column. No requirements are entered in the Units per Assembly column.

SPARE PARTS

20. In addition to production part numbers, spare part numbers are listed in the Part Number column. These spare part numbers are listed immediately following their production items and are identified as: (SPARE FOR...), in the same indention column without requirements.

CONTROLLED INTERCHANGEABLE PARTS AND ASSEMBLIES

21. Controlled interchangeable parts and assemblies are production parts which can be installed without rework and are identified as such in the nomenclature by (INTERCHANGEABLE) in parentheses.

CONTROLLED REPLACEABLE PARTS AND ASSEMBLIES

22. Controlled replaceable parts and assemblies are production parts which must be reworked to obtain a suitable fit. They are identified as such in the nomenclature by (REPLACEABLE) in parentheses.

REFERENCING

23. When applicable, parts which are interrelated, but are physically outside the figure, are referenced.

CONTINUED BREAKDOWNS

24. Engineering drawings which cannot be covered by one illustration will show, at the end of the breakdown, the figure number or section to which the breakdown continues. In these continued figures, the same drawing title appears, REF is shown in the Units per Assembly column, and the originating figure or section indicated in the nomenclature.

25. References within a section are by figure number. A reference to another section is by section number only.

HANDED ASSEMBLIES

26. The breakdown and the attaching parts for identical or nearly identical LH and RH assemblies cover the left-hand assemblies only. The differing

items are listed as (LH) and (RH) or (port) and (starboard). When handed assemblies differ materially, a separate breakdown with an illustration is given.

ATTACHING PARTS

27. Attaching parts are listed in the same indention column as the assembly or unit they attach.

NOTE

Attaching parts must always be ordered separately, since they are not details of the item or assembly.

PURCHASED PARTS

28. Parts purchased by Canadair to vendors' drawings or specifications are not broken down in the part list.

CANADAIR SPECIFICATION CONTROL DRAWING

29. When parts purchased to Canadair specification control drawings are to be listed, the vendor part number, or the military specification is used.

ILLUSTRATIONS

GENERAL

30. Illustrations, which accompany each compilation breakdown, normally depict the left-hand installation or assembly breakdown with corresponding item indexes for identification purposes.

EXPLODED VIEWS

31. Exploded views are used for the following purposes:

a. To illustrate parts in greater detail.

b. To illustrate parts used only on right-hand installations or assemblies.

c. To illustrate hidden items.

SYSTEM ILLUSTRATIONS

32. At the beginning of each Section dealing with a particular system installed on the aircraft, a system illustration with a general breakdown is included. These breakdowns show key locations embodied in the particular system, and are referenced in the nomenclature to the figure where the detail breakdown is called.

DRAWING NUMBERING SYSTEM

GENERAL

33. All drawing numbers assigned to the Tutor aircraft are divided into two parts by a dash. The number preceding the dash designates the aircraft model, while the number following the dash is the basic function number.

MODEL NUMBER

34. The aircraft model number - or drawing prefix - indicates the aircraft for which the part was designed. In this part list, the prefixes of the drawings are 41, 44 and 28.

BASIC FUNCTION NUMBER

35. The basic function number is determined by the aircraft component. Thus, the wing drawings are assigned numbers in the 10,000 series, fuselage drawings in the 30,000 series , power plant drawings in the 60,000 series, etc.

FINDING AN ITEM IN THE PART LIST

GENERAL

36. Both the numerical part list and the table of contents for Part 2 and Part 3 are employed to find an item in the part list.

FINDING AN ITEM WHEN PART NUMBER IS KNOWN

37. To find an item when the part number is known, proceed as follows:

a. Turn to Part 5, the numerical part list, and find the desired part number.

b. Note the figure number, and index number where given. (Not all items carry an index number.)

c. Turn to the noted figure to obtain the desired information.

FINDING AN ITEM WHEN PART NUMBER IS UNKNOWN

38. To find an item, the function or next assembly of which is known but the part number unknown, proceed as follows:

a. Turn to the list of illustrations, locate the next assembly, and note the page number.

b. Turn to the indicated page number.

c. Locate the item on the illustration.

d. Note the index number (refer to f. following).

e. In the accompanying breakdown, the part number and title will be found against the index number.

f. An unindexed part which is illustrated may be found with its assembly, or, if the assembly is referenced, it may be found in the referenced figure.

SPECIAL SERVICE TOOLS

GENERAL

39. Special tools and ground handling equipment purchased by the Canadian Forces are listed in Part 3. Pages are numbered consecutively within Part 3.

BULK MATERIAL CHART

GENERAL

40. Part 4 gives information to make line assemblies 3/4 inch outside diameter and under, and also lists linings and trims used as furnishings which are called out in Part 2.

41. Chart 3, Specifications - Commercial; Designations of Tubing, is for reference purposes only.

LISTING ARRANGEMENT

42. Listing is per system breakdown, with the part numbers in numerical order. Pages are numbered consecutively within Part 4.

TUBE DIMENSIONS

43. Tube dimensions are in fractions of an inch (outside diameter), wall thickness in decimals of an inch, and straight length in inches and fractions.

MATERIAL SPECIFICATION

44. This column contains the following information:

a. First line: Company material specification.

b. Second line: Canadian Forces stocked material specification.

c. Third line: Canadian Forces reference.

NUMERICAL PART LIST

GENERAL

45. The numerical part list, Part 5, is compiled in sequence according to PROC 100-8, Part 5, and contains part number columns, figure and index columns, and quantity columns. Pages are numbered consecutively within Part 5.

PART NUMBER COLUMN

46. The Part Number column, appearing in each sub-division of a page, contains the item drawing numbers as given in the group assembly part list and the special service tool list.

FIGURE AND INDEX COLUMN

47. This column lists the figures and index numbers as given against the relevant items in Part 2 and Part 3.

QUANTITY COLUMN

48. The Quantity column summarizes the call-outs in Part 2 and Part 3, but is not necessarily the total quantity per aircraft.

ALTERNATIVE PART NUMBERS

49. Parts listed in the numerical part list for which requirements in the Quantity per Aircraft column are not shown are those parts called out in Part 2 as alternative parts (refer to Paragraph 19, preceding).

NOMENCLATURE ABBREVIATIONS AND CONTRACTIONS

GENERAL

50. List 2 supplements and follows the principles of MIL-STD-12C, Schedule of Abbreviations.

LIST 1 PROPRIETARY NAMES AND ADDRESSES

V00198 Pratt and Whitney Canada Inc.
1000 Marie-Victorin Blvd.
Longueuil QC J4G 1A1
Tel: 1-800-268-8000
Fax: 514-647-3620

V00502 Adel Division of
De Laval Turbine Inc.
Burbank CA 91500

V01212 Federal-Mogul Corp.
Government Sales Dept.
26555 Northwestern Hwy. 1966
Detroit MI 48235
Tel: 810-354-7923

V02121 Menasco Aerospace Ltd.
1400 S. Sercice Rd. W.
Oakville ON L6L 5Y7
Tel: 905-827-7777

V02195 American Fork and Hoe Co.
Cleveland OH 44100

V02660 Amphenol Corp. Spectra-Strip/ITD
720 Sherman Ave.
Hamdem CT 06514

V02695 Morse Indutrial Corp.
Sealmaster Bearing Div.
1901 Bilter Rd.
P.O. Box 1588
Aurora IL 60507

V02750 Eaton Corporation
Div Engineered Sensor
15 Durant Ave.
Bethel CT.
Tel: 203-796-6000
Fax: 203-796-6313

V02919 Aiken Industries Inc.
Panorama City CA

V03038 Long-Lok Corp.
Sub. of Rockwood Group
14119 Chadron Ave.
Hawthorn CA 90250
Tel: 310-675-9500

V03296 Nylon Molding Corp.
1617 S. California
Monrovia CA 91016-4621
Tel: 800-321-1243

V03554 Amphenol Canada Ltd.
20 Melford Dr.
P.O.BOX 7966
Scarborough ON M1R 2X6
Tel: 416-291-4401

V03743 Appleton Electric Co.
Div. of Emerson Electric Co.
2205 12th Ave.
South Milwaukee WI 53172-2541
Tel: 414-762-8400

V04073 Aviel Electronics Inc.
5530 S. Valley View Suite 103
Las Vegas NV 89119
Tel: 702-739-8155

V04211 Allied Healthcare Products Inc.
Coastal Dental Div.
Sub. of Allegheny International
Ashland OR 97520

V04319 The Advanced Products Co.
33 Defco Park Rd.
North Haven CT 06473-1129
Tel: 203-239-3341

V04440 Atlas Electric Devices Co.
4114 N Ravenswood Ave.
Chicago IL 60613-1831
Tel: 312-327-4520

V05257 Computing Devices of Canada Ltd.
Div. of Computing Devices
International Inc.
3785 Richmond Rd.
Nepean ONT K2H 5B7
Tel: 613-596-7000

V05402 Singer Co. The Control Div.
Melrose Park IL 60160

V05695 Master Pneumatic-Detroit Inc.
6701 18 Mile Rd.
Sterling Heights MI 48314
Tel: 810-254-1000

V06383 Panduit Corp.
17301 Ridgeland
Tinley Park IL 60477-3048
Tel: 708-532-1800

V06848 Allied Signal Inc.
Control and Accessories
DBA Allied Signal Aerospace Co.
717 N. Bendix Dr.
South Bend IN 46620
Tel: 219-231-3000

V07038 The Bendix Corp.
Bendix Aerospace Systems Div.
1300 E Joppa Rd.
Baltimore MD 21204-5917

V07187 Honeywell Inc. Defense Avionics
System Div.
9201 San Mateo Blvd. NE
Albuquerque NM 87113-2227
Tel:505-828-5000

V07213 Allied Signal Aerospatiale Canada Inc.
200 Marcel Laurin Blvd.
Montreal QC H4M 2L5
Tel: 514-744-2811
Fax: 514-342-3795

V07214 Canadian Admiral Corp. Ltd.
Port Credit ON L5G 4M5

V07216 Rockwell International of Canada Ltd.
Collins Canada Div.
Toronto ON M4A 1C7

V07217 Allied Signal Aerospace Canada
255 Atwell Dr.
Rexdale ON M9W 6L7
Tel:416-675-1411

V07222 Weatherhead Co. of Canada Ltd.
St-Thomas ON

V07693 Burndy Corp. Inc.
1530 Birchmount Rd.
Scarborough ON M1P 2G9
Tel: 416-757-8761

V07700 Technical Wire Products
129 Dermody St.
Cranford NJ 07016-3217
Tel: 908-272-5500

V07797 Rocker Solenoid Co.
DBA Rocker Industries
1500 W 240th St.
Harbor City CA 90710-1309
Tel: 310-534-5660

V08179 Garrett Turbocharger Div.
Garret Group Automotive Sector
Allied Signal Inc.
3201 W Lomita Blvd.
Torrance CA 90505-5064
Tel: 213-517-1427

V08342 Bendix Automotive of Canada Ltd.
Windsor ON

V08376 Johns-Manville Canada Ltd.
Mississauga ON

V08419 Devilbliss Air Compressor Products
Div. of ITW Canada Inc.
50 Wood St.
P.O. Box 5800
Barrie ON L4M 6K3
Tel: 705-728-5657

V08420 Bell and Howell Canada Ltd.
Document Management Products
360 Hanlan Rd.
Woodbridge ON L4L 8V6
Tel: 416-746-2200

V08471 Senior Flexonics of Canada Ltd.
134 Nelson St. W.
Brampton ON L6V 2M2
Tel: 416-451-1250

V08479 Garlock of Canada Ltd.
Mechanical Packing Div.
2860 Plymouth Dr.
Oakville ON L6H 5S8
Tel: 416-829-3200

V08484 Trans Technology Corp.
Breeze-Eastern Div.
700 Liberty Ave.
Union NJ 07083-8107
Tel: 908-686-4000

V08748 Eldec Corp.
16700 13Th Ave. W
P.O. Box 97027
Lynnwood WA 98046-9727
Tel: 206-743-1313

V09049 Custom Control Sensors Inc.
21111 Plummer St.
Chatsworth CA 91311-2516
Tel: 818-341-4610

V09479 Aeroquip (Canada) Ltd.
Toronto ON

V09482	Amp of Canada Ltd. 20 Esna Park Dr. Markam ON L3R 1E1 Tel: 416-475-6222
V09487	Canadian Curtiss-Wright Ltd. 1815 Sismet Rd. Mississauga ON L4W 1P9 Tel: 416-625-6557
V09512	Jeffrey Mfg. Co. Ltd. Div. Of Dresser Canada Inc. 300 St. Patrick St. P.O. Box 700 Ville La Salle QC H8R 3Y4 Tel: 514-366-2550
V09543	Kidde, Walter, and Company of Canada Ltd. Toronto ON
V09569	Duracell Inc. 2333 N. Sheidan Way Mississauga ON L5K 1A7 Tel: 416-823-4410
V09581	3M Canada Inc. 1849 Oxford St. E. P.O. Box 5757 Terminal A London ON N6A 4T1 Tel: 519-451-2100
V09698	Snap-On Tools of Canada Ltd. Product Services and Distribution 150 Caldari Rd. Concord ON L4K 4L1 Tel: 416-660-2505
V09708	Honeywell Ltd. Aerospace Div. 3 Hamilton Ave. N. P.O. Box 3160 Sta. C Ottawa ON K1Y 4J4 Tel: 613-728-4681
V09736	TRW Canada Inc. United-Carr Div. 455 Arvin Ave. P.O. Box 500 Stoney Creek ON L8E 2N2
V09819	Canadian General Electric Co. Ltd. Apparatus Dept. 107 Park St. N. Peterboro ON
V09959	Aircraft Instruments Co. 4039 Skydron Dr. Doyles Town PA 18901-1121 Tel: 215-348-5274
V0TRC3	Garmin Intl. Inc. 1200E 151 St. Olathe KS United States 66062-3426 Tel: 913-397-8200
V11065	ITT Fluid Products Canada 55 Royal Rd. Guelph ON N1H 1T1 Tel: 519-821-1900
V11066	Goodyear Canada Inc. 10 Four Seasons PL 9th Floor Etobicoke ON M9B 6G2 Tel: 416-626-4611 Fax: 416-620-8393
V11707	Ideal Precision Meter Co. 214 Franklin St. Brooklyn NY 11222-1302 Tel: 718-383-6904
V12116	Talley Defence System Inc. Talley Industries Inc. 3500 N Greenfield Rd. P.O. Box 849 Mesa AZ 85211-0849 Tel: 602-898-2200
V12282	Carleton Life Support Technologies Inc. 1-1200 Aerowood Dr. Mississauga ON L4W 2S7 Tel: 905-629-3245
V12288	Velcro Canada Ltd. 114 East Dr. Bramela ON L6T 1C1 Tel: 416-791-1630
V12305	The Thompson H I Co. 10 Kingsmill Ave. P.O. Box 906 Guelph ON N1H 6M6 Tel: 519-822-6630
V13103	Thermalloy Co. 2021 W. Valley View Lane P.O. Box 81039 Dallas TX 75381 Tel: 214-243-4321
V13499	Rockwell Intl. Corp. Collins Avionics 350 Collins RD NE Cedar Rapids IA 52498 Tel: 319-395-1000

V14736 General Electric Co.
Aircraft Instrument Dept.
50 Fordham Rd.
Wilmington MA 01887-2146
Tel: 617-937-4951

V15605 Eaton Corp. Operation and
Technical Ctr.
4201 N. 27th St.
Milwaukee WI 53216-1807
Tel: 800-386-1911

V15840 Danly Machine Specialties Inc.
2100 S. Laramie Ave.
Chicago IL 60650-2363
Tel: 312-242-1800

V16258 Space-Lok Inc.
2526 N. Ontario
Burbank CA 91504-2512
Tel: 213-849-6751

V16688 Dejur Meter Div. of Ideal Precision
Meter Co. Inc.
Brooklyn NY

V16875 Smithkline Instruments Co.
Sub. of Smithkline Beckman Corp.
880 W Maude Ave. 61947
Sunnyvale CA 94086-2920

V17039 Ex-Cell-O London Canada
London ON

V17900 Chris Aire Inc.
4401 San Fernando Rd.
Glendale CA 91204-2206

V21335 Torrington Co.
Fafnir Bearing Div.
59 Field St.
Torrington CT 06790-4942
Tel: 203-482-9511

V21573 Bell and Howell Canada Ltd.
Weston ON M9L 2X5

V22040 Felsenthal Instruments Co.
Chicago IL

V24931 Specialty Connector Co.
2100 Earlywood Dr.
P.O. Box 547
Franklin IN 46131
Tel: 317-738-2800

V26044 New Haven Mfg. Corp.
Gar-Kenyon Control Div.
446 Blake St.
New Haven CT 06515-1238
Tel: 203-387-2572

V26344 New Haven Mfg. Corp.
446 Blake St.
New Haven CT 06515-1238
Tel: 203-397-3311

V27016 Handley Industries Inc.
2101 Brooklyn Rd.
P.O. Box 863
Jackson MI

V28856 Telex Communications Inc.
Sub. of Telex Corp.
9600 Aldrich Ave. S
Minneapolis MN 55420-4210
Tel: 612-887-7403

V29372 Fairchild Industries Inc.
Fairchild Aerospace Fastener Div.
3000 W Lomita Blvd.
Torrance CA 90505-5103
Tel: 310-530-2220

V29666 Huck Manufacturing Co.
Sub. of Federal-Mogul Corp.
Irvine CA

V31435 Lucas Aerospace Power Equipment
Corp.
777 Lena Dr.
Aurora OH 44202
Tel: 216-995-1000

V32245 Aerospace Optics Inc.
3201 Sandy Ln.
Fort Worth TX 76112-7203
Tel: 817-451-1141

V35013 Hawker Siddely Canada Inc.
Orenda Div.
3160 Derry Rd. E.
Mississauga ON L4T 1A9
Tel: 905-673-4041

V35043 Wire Rope Industries Ltd.
5501 Trans-Canada Hwy.
Pointe-Claire QC HR9 1B7
Tel: 514-426-6483

V35076 Aircraft Appliances and Equipment
Ltd.
150 East Dr.
Bramalea ON L6T 1C1
Tel: 905-791-1666

V35289 Dominion Wire Rope Co. Ltd.
Lachine QC

V35344 Leach Relay Co. Div. of Leach Corp.
Los Angeles CA

V35351 Smiths Aerospace LLC
DBA Smith Industries Div
Electronic Systems – Grand Rapids
3290 Patterson Ave. SE
Grand Rapids MI 49512-2193
Tel: 616-241-8511
Fax: 616-241-7451

V35610 Textron Canada Ltd. Camcar Div.
15 Clarence St.
Gananoque ON K7G 2C5
Tel: 416-675-5530

V35876 Leigh Instruments Ltd.
O and W Panel Dept.
Carleton Place ON

V35918 Coltec Industries Inc.
DBA Lewis Engineerin g Co.
238 Water St.
P.O. Box 231
Naugatuck CT 06770-0231
Tel: 203-597-6900

V35934 Canrep Ltd. Div. of Canron Ltd.
Montreal QC

V35962 Messier-Dowty Inc.
574 Monarch Ave.
Ajax ON L1S 2G8
Tel: 416-683-3100

V35972 Godfrey Aerospace Inc.
70 Hymus Blvd.
Pointe-Claire QC H9R 1C9
Tel: 514-426-4300

V35993 Rawplug Canada Ltd.
7407 Bren Rd.
Mississauga ON L4T 1H3
Tel: 905-673-7293

V36123 Digipath Video Inc.
Formerly Central Dynamics Ltd.
147 Hymus St.
Pointe-Claire QC H8R 1G1
Tel: 514-697-0224

V36135 Bell Canada Business Office
1050 Beaver Hall
Montreal QC H3C 3G4

V36164 Heroux Inc.
755 Thurber Ave.
Longe uil QC J4H 3N1

V36452 Spar Aerospace Ltd.
115 Emily St.
Carleton Place ON K7C 4J5
Tel: 613-592-3430

V36536 Simmonds Precision Products Inc.
Long Island City NY

V36659 Lockheed-California Inc.
Div. of Lockheed
2555 N. Hollywood Way
Burbank CA 91520

V36673 Canadian Flight Equipement Co. Ltd.
Trenton ON

V36718 Patlon Aircraft and Industries Ltd.
5502 Thimberlea Blvd.
Mississauga ON L4W 2T7
Tel: 905-624-5572
Fax: 905-624-0975

V36790 DRG Sello Tape Div. of DRG Ltd.
Toronto ONT

V37473 Aerospace Maintenance Development
Unit CFB Trenton
Astra, ONT, KOK 1BO
Tel: 613-965-2797

V38501 Robin Aerospace Product Ltd
6205 Airport Rd
Mississauga ONT L4V 1E1

V44655 Ohmite Mfg. Co.
3601 W. Howard St.
Skokie IL 60076-4014
Tel: 708-675-2600

V45402 Pacific Scientific - HTL/KIN Tech. Div.
22715 Savi Ranch Pky.
P.O. Box 87019
Yorba Linda CA 92686-7019
Tel: 714-283-0283

V45681 Parker-Hannifin Corp. HQ
17325 Euclid Ave.
Cleveland OH 44112-1290

V48482 JM Clipper Corp.
403 Industrial Dr.
Nacogdoches, TX., United States
75963-2340
Tel: 800-233-3900

V50599 Crane Resistoflex Co.
2575 W 5th St.
Jacksonville FL 32254
Tel: 904-389-3400

V50999 Jetco Inc.
2801 N. 37th Ave.
Phoenix AZ 85009-1341
Tel: 602-269-5971

V53655 Scott Aviation Corp.
Div. Figgie International Inc.
225 Erie St.
Lancaster NY 14086-9502
Tel: 716-683-5100

V53750 Seaboard Electronic Corp.
Div. of Stelma Inc.
Wallingford CT

V56257 Helicoflex Co. Components Div.
2770 The Blvd. Columbia Industrial Pk.
9889
Columbia SC 29290
Tel: 803-783-1880

V56878 SPS Technologies Inc.
Aerospace and Industrial Products Div.
Highland Ave.
Jenkintown PA 19046-2299
Tel: 215-572-3000

V57378 Lockheed Corp.
4500 Park Granada Blvd.
Woodland Hills CA 91399
Tel: 818-876-2000

V57733 Stewart-Warner Instrument Corp.
580 Slawin Ct.
Mount Prospect IL 60056-0200
Tel: 708-803-0200

V58918 Aerospace Control Products Inc.
1314 W. 76th St.
Davenport IA 52806-1305
Tel: 319-391-6051

V58982 Precision Connector Designs
Centennial Park 2 Technology Dr.
Peabody MA 01960
Tel: 508-532-8800

V60674 Microwave Devices Inc.
399 State St.
Franklin IN 46131-2556
Tel: 317-736-8833

V61158 UNIFRAX Corp. 327125
2351 Whirlpool St.
Niagra Falls, NY, USA
14305-2413
Tel: 716-278-3845
mroos@unifrax.com

V61349 Ametex/US Gauge
900 Clyme r Ave.
Sellersville PA 18960-2625
Tel: 215-257-6531

V61463 Uniroyal Chemical Co. Inc. World HQ
Oxford Management and Reasearch
Ctr.
Benson Rd.
Middlebury CT 06762
Tel: 203-573-2000

V61564 Aeroquip Canada Inc.
1305 Magurette St.
Montreal QC H4N 1G9

V61864 TRW Assemblies and Fasteners Group
Cleveland OH

V61957 USM Corp.
Sub. of Emhart Industries Inc.
Boston MA

V62793 BMF Energy Products Corp.
1400 Village Way
Santa Ana CA 92705-4715
Tel: 714-250- 1010

V63590 SPC Technology
Div. of Primer Industrial Corp.
4801 N. Ravenswood
IL 60640-4496
Tel: 312-784-5100

V65301 Pennwalt Corp.
S.S. White Equipment Div.
New York NY

V67074 Elco Gear Corp.
7500 S. Garfield Ave.
Bell Gardens CA 90201-4894
Tel: 213-927-1469

V69705 Aeroquip Corp Industrial Product
Group
1695 Indian Wood Cir 700
Maumee OH 43537-0700
Tel: 419-891-7670

V70152 UOP Instrument Div. of
Universal Oil Products Co.
Greenwich CT

V70192 Gorn Div. of Gap Instrument Corp.
110 Marcus Blvd.
Hauppauge NY 11787

V70210 Allied Signal Inc.
DBA Allie d Signal Aerospace Co.
Aireshearch Los Angeles Div.
2525 W. 190th St.
Torrance CA 90509-2960
Tel: 310-323-9500

V70417 Chrysler Corp.
Amplex Div.
6565 E. Eight Mile Rd.
Warren MI 48091-2949
Tel: 313-497-9091

V70563 Amperite Co.
600 Palisades Ave.
Union City NJ 07087-5259

V70628 Vesper Corp.
Arrow Products Div.
4411 Katella Ave.
Los Alamitos CA 90720-3514
Tel: 714-828-7770

V70677 Auld D.L. Co.
6th Ave. and Fifth St.
Columbus OH

V71286 Fairchild Corp. Camloc Products Div.
3012 W Lomita Blvd.
Torrance CA 90505
Tel: 310-784-2600

V71310 The Carbone USA Corp.
400 Myrtle Ave.
Boonton NJ 07005-1839
Tel: 201-334-0700

V71400 Cooper Industries Inc.
Bussman Div.
114 Old State Rd.
Ellisville MO 63021-5942
Tel: 314-394-2877

V71468 ITT Corp.
ITT Canon Div.
666 E. Dyer Rd.
Santa Ana CA 92702
Tel: 714-557-4700

V71688 Northern Telecom Inc.
Cook Electric Div.
Morton Grove IL 60053

V72619 Dialight Corp.
Brooklyn NY 11200

V72653 G. C. Electronics Co.
Sub. of Household International Corp.
1801 Morgan St.
P.O. Box 1209
Rockford IL 61105- 1209

V72794 Dzus Fastener Co. Inc.
425 Union St.
West Islip NY 11795-3123
Tel: 516-669-0494

V72914 Grimes Aerospace Co.
550 State Rt. 55
P.O. Box 247
Urbana OH 43078-9482
Tel: 513-652-1431

V72962 Harvard Industries Inc.
2502 N Rocky Point Dr. Suite 960
Tampa FL 33607
Tel: 813-288-5000

V73134 IMO Industries Inc.
Heim Universal Div.
60 Round Hill Rd.
P.O. Box 430
Fairfield CT 06430-0430
Tel: 203-255-1511

V73168 Kidde Technologies Inc.
Fenwall Safety System Div.
700 Nickerson Rd.
Marlborough MA 01752
Tel: 508-481-5800

V73760 ITT Aerospace Control Div.
1200 S. Flower St.
Burbank CA 91502-2023

V74063 Figgie Intl. Inc.
Hartman Electrical Mfg. Div.
175 N. Diamond St.
P.O. Box 8
Mansfield OH 44902-1004
Tel: 419-524-1411

V74144 Cam-Stat Inc.
Los Angeles CA 90000

V 74868 Amphenol Corp. RF/Microwave Opns.
1 Kennedy Ave.
Danbury CT 06810-9272

V75042 TRW Inc.
TRW Electronic Components
IRC Fixed Resistors Philadelphia Div.
Philadelphia PA

V75165 Schuller Intl. Inc.
717 17th St.
Littleton CO 80127
Tel: 303-978-5211

V75237 Kaynar Technologies Inc. Microdot Div.
Aerospace Fastening System Group
190 Crowther Ave.
Placentia CA 92670
Tel: 714-870-6650

V75595 Swedlow Inc.
Liberty Mirror Div.
851 Third Ave.
Brackenbridge PA 15014
Tel: 412-224-1800

V75829 Libbey-Owens-Ford Co.
811 Madison Ave.
Toledo OH 43624
Tel: 419-247-3731

V76374 Mechanical Products Inc.
Sub. of Spreckles Inc.
1824 River St. 729
Jackson MI 49204

V76381 Minnesota Mining and Mfg. Co.
3M Ctr.
St-Paul MN 55144-1000
Tel: 612-737-4114

V76487 Millen, James, Mfg. Co. Inc.
Malden MA 02148

V76689 National Screw and Mfg. Co.
Santa Monica CA

V76691 National Telephone Supply Co.
5100 Superior Ave.
Cleveland OH 44103-1240
Tel: 216-361-0221

V76786 North & Judd Mfg. Co.
699 Middle St.
Middletown CT 06457-1524
Tel: 203-632-2600

V76906 Operating & Maintenance
Specialties Co.
130 South Side Dr.
P.O. Box 11515
Charlotte NC 28217
Tel: 704-523-4031

V77326 Pollack, Joseph, Corp.
195 Freeport St.
Boston MA 02122-2827

V77820 Amphenol Corp.
Amphenol Aerospace
40-60 Delaware St.
Sidney NY 13838-1395
Tel: 607-563-5011

V77896 Rexnor Corp. Bearing Opns.
2400 Curtiss St.
Downers Grove IL 60515-4005
Tel: 312-969-1770

V77969 Rubbercraft Corp. of California Ltd.
15627 S. Broadway
Guardena CA 90248
Tel: 310-328-5402

V78189 Illinois Tool Wks. Inc.
Shakeproof Div.
St- Charles Rd.
Elgin IL 60120
Tel: 708-741-7900

V78533 Tinnerman Products Inc.
P.O. Box 6688 Dept. 16
Cleveland OH

V78553 Eaton Corp.
Engineered Fasteners Div.
14701 Detroit Ave.
Lakewood OH
44107-4101

V78570 Titeflex Corp. Sub of Bundy Corp.
603 Hendee St.
P.O. Box 90054
Springfield MA 01139
Tel: 413-739-5631

V78702 Delhi-Solac Inc.
Taco Communications Antenna Div.
5512 Bearcreek Dr.
Mechanicsburg PA 17055
Tel: 717-975-0885

V78710 Teleflex Inc.
Aerospace Div.
205 Church Rd.
P.O. Box 2100
North Wales PA 19454
Tel: 215-699-4861

V79326	IMO DeLaval Inc. Wiggins Connectors Div. 5000 Triggs St. P.O. Box 22228 Los Angeles CA 90022-4833 Tel: 213-881-7607
V80058	Joint Electronics Type Designation System
V80099	Edison Instrument Div. of McGraw-Edison Co. West Orange NJ 07052
V80234	Vapor Corp. Sub. of Brunswick Corp. 6420 W. Howard St. Miles IL 60174-3302 Tel: 708-967-8300
V80249	Hazeltine Corp. Cuba Hill Rd. Greenlawn NY 11740-9985 Tel: 516-262-8222
V80477	Adams Rite Sabre Intl. 540 W. Chevy Chase Dr. Glendale CA 91204 Tel: 818-241-5121
V80647	Textron Inc. 40 Westminster St. Providence RI 02903-2525 Tel: 401-421-2800
V80795	ITT Corp. 320 Park Ave. New York NY 10022-6815 Tel: 212-258-1000
V81039	GEC-Marconi Aerospace Inc. 110 Algonquin Pkwy. Whippany NJ 07981-1640 Tel: 201-428-9898
V81312	Winchester Electronics Div. of Litton Systems Inc. 400 Park Rd. Watertown CT 06795-0500 Tel: 860-945-5000
V81349	Military Specifications
V81350	Joint Army-Navy Specifications
V81376	Southwest Products Co. 2240 Buena Vista St. Irwindale CA 91706 Tel: 818-348-0181
V81574	TCE Canada Ltd. 4-60 Baffin Pl. Waterloo ON N2V 1Z7 Tel: 519-747-9227
V81640	Eaton Corp. Aerospace and Commercial 2250 Whitfield Ave. E 4095 Sarasota FL 34243 Tel: 941-751-7112
V81839	Carma Mfg. Co. Torrance CA 90500
V81840	Lucas Ledex Inc. 801 Scholz Dr. P.O. Box 427 Vandalia OH 45377-0427 Tel: 513-898-3621
V81901	Control Products Inc. 280 Ridgedale Ave. East Hanover NJ 07936-2394 Tel: 201-887-9400
V81982	Hydro-Aire Div. of Crane Co. 3000 Winona Ave. P.O. Box 7722 Burbank CA 91510 Tel: 818-842-6121
V82152	Datron/Transco Inc. 200 W. Los Angeles Ave. Simi Valley CA 93065 Tel: 805-584-1717
V82267	Schulz Tool and Mfg. Co. San Gabriel CA
V82647	Texas Instruments Inc. Control Prod. Div. M/S 12-33 34 Forest St. Attleboro MA 02703-0964 Tel: 508-236-3800
V82768	Phillips-Advance Control Co. Div. of Phillips-Eckart Electronic Corp. Joliet IL
V82829	Allen Aircraft Products Inc. 6168 Woodbine Ave. P.O. Box 1211 Ravenna OH 44226-1211 Tel: 216-296-9621

V82831 Rexnor Inc.
Specialty Fastener Div.
Santa Ana CA

V83014 Hartwell Corp.
900 S. Richfield Rd.
Placentia CA 92670-6732
Tel: 714-993-4200

V83086 New Hampshire Ball Bearings Inc.
Rt. 202
Peterborough NH 03458
603-924-3311

V83326 Safe Flight Instrument Corp.
20 New King St.
P.O. Box 550
White Plains NY 10602
Tel: 914-946-9500

V83564 Wemac Div. of Puritan-Bennet
Aerosystems Co.
18475 Pacific St.
Fountain Valley CA 92708-7004

V83624 Uniroyal Inc.
Uniroyal International Div.
Oxford Management and Research Ctr.
Benson Rd.
Middleburry CT 06762
Tel: 203-573-2000

V83646 Gabb Special Products Div. of
Connecticut International Corp.
Windsor Locks CT

V84256 Avibank Mfg. inc.
210 S. Victory Blvd.
P.O. Box 391
Burbank CA 91503
Tel: 818-843-4330

V84685 Hydra-Power Corp. Div. of
Teledyne Inc.
10-12 Pine Ct.
New Rochelle NY 10801
Tel: 914-632-2200

V84971 TA Mfg. Corp.
Sub. of Criton Technologies
375 W. Arden Ave.
P.O. Box 2500
Glendale CA 91209-2500
Tel: 818-240-4600

V88063 Collins Radio Co.
Components Div.
Santa Ana CA

V88308 Bombardier inc.
Canadair
400 Cote Vertu Rd. W.
Dorval QC H4S 1Y9
Tel: 514-855-5000

V88821 Ransome and Marles Bearing Co. Ltd.
Newark-on-Trent
Nottingham England

V89305 Simmonds Precision Products Inc.
100 Panton Rd.
Vergennes VT 05491-8801
Tel: 802-877-2911

V89944 Sequa Corp.
Kollsman Div.
220 Daniel Webster Hwy. S.
Merrimack NH 03054-4809
Tel: 603-889-2500

V89954 Martin Marietta Corp. Control
Systems
600 Main St.
Johnson City NY 13790-1888
Tel: 607-770-2043
Binghampton NY

V90073 Canadian Marconi Corp.
2442 Trent on Ave.
Montreal QC H3P 1Y9
Tel: 514-748-3148

V90095 Technitrol Inc.
1952 E Alleg heny Ave.
Philadelphia PA 19134
Tel: 215-426-9105

V91511 Auto-Valve Inc.
1707 Geunther Rd.
Dayton OH 45427-3244
Tel: 513-854-3037

V91637 Dale Electronics Inc.
1122 23rd St. 609
Columbus NE 68602-0609
Tel: 402-563-6291

V91767 Heli-coil Corp.
Danbury CT

V91812 Janco Corp.
3111 Winona Ave.
Burbank CA 91504
Tel: 818-846-1800

V91816	Circle Seal Controls Inc. a Watt Industries Inc. Co. 2301 Wardlow Cir. P.O. Box 3300 Corona CA 91720 Tel: 909-270-6200
V91836	Kings Electronic Co. Inc. 40 Marbledale Rd. Tuckahoe NY 10707-3420 Tel: 914-793-5000
V91929	Honeywell Inc. Micro Switch Div. 11 W Spring St. Freeport IL 61032 Tel: 800-537-6945
V92003	Parker Aircraft Corp. Parker-Bertea Aerospace Group HQ 18321 Jamboree Blvd. P.O. Box C-19510 Irvine CA 92713 Tel: 714-833-3000
V92215	Fairchild Industries Inc. Fairchild Aerospace Fastener Div. 3010 W. Lomita Blvd. Torrance CA 90505-5102 Tel: 310-784-6444
V92541	Custom Craft Products Inc. 3000-A Airway Ave. Costa Mesa CA 92626 Tel: 714-957-6308
V92798	Shuller Intl. Inc. Manville Specialty Insulation Div. 2730 Industrial Pky. Elkhart IN 46516 Tel: 219-296-3522
V92830	Associated Spring Barnes Group Inc. 18 Main St. Bristol CT 06010-6527 Tel: 203-582-9581
V93332	Sylvania Elec. Prod. Inc. Semiconductor Prod. Div. Woburn MA
V93988	Zerillo Products Inc. 525-529 Glenmore Ave. Brooklyn NY 11207-3604
V94580	Honeywell Inc. Avionics Div./Military Sales 2600 Ridgway Pky. Minneapolis MN 55413-1719 Tel: 612-951-1000
V94581	National Utilities Co/Nuco Div. of V I J Corp. 1700 Hickory Dr. P.O. Box 14639 Forth Worth TX 76117-6020 Tel: 817-838-2020
V94592	Fluid Conditioning Products Inc. Kleine and Warwick St. Lititz PA, USA, 17543-0407 Tel: 717-627-1550
V94970	Dukane Corp. Seacom Div. 2900 Dukane Dr. St-Charles IL 60174-3395 Tel: 708-584-2300
V94988	Cooper Industries Inc. Wagner Lighting Div. 75 W. Main St. Weatherly PA 18255-1099 Tel: 717-427-8261
V95712	The Bendix Corp. Electrical Components Div. Franklin IN 46131
V96182	Eaton Corp. Aerospace and Commercial Controls Div. Msc. Products 1640 Monrovia Ave. P.O. Box 1920 Costa Mesa CA 92628 Tel: 714-642-2427
V96238	DNE Technologies Inc. 50 Barnes Park N 30 Wallingford CT 06492-0030 Tel: 203-265-7151
V96313	Haynes-Dana Ltd. Corporate Offices 1 St-Paul St. 3029 St-Catherines ON L2R 7K9
V96423	Gaudette Mfg. Co. Los Angeles CA
V96744	The Ansonia Wire and Cable Co. Ashton RI
V97393	Shur-Lock Corp. 2541 White Rd. P.O. Box 19584 Irvine CA 92713 Tel: 714-474-6000

V97564	Pollak Corp. Transportation Electronic Div. 11801 Miriam Dr. Suite B-1 El Paso TX 79936-7430 Tel: 915-592-5700
V97613	Sargent Controls and Aerospace Kahr Bearing Div. 5675 W Burlingame Rd. 730 Cortaro AZ 85652-0730 Tel: 602-744-1000
V97945	Pennwalt Corp. SS White Industrial Product Div. Piscataway NJ
V97992	Uniroyal Goodrich Canada Inc. 59 Hymus Blvd. Pointe-Claire QC H9R 1E2 Tel: 514-694-5220
V98429	Warmann Watch Co. Inc. 1214 Broadway Suite 406 New York NY 10001 Tel: 212-532-3898
V98625	Aeroquip Corp. Aeroquip Aerospace Div. Marman Plant Los Angeles CA
V99145	Eaton Corp. Valve and Actuator Div. 2338 Alaska Ave. El Segundo CA 90245 Tel: 310-643-9938
V99321	Shaw Aero Devices Inc. 12291 Towne Lake Dr. Fort Myers FL 33913 Tel: 813-768-5644
V99333	Barber, F.F. Machinery Toronto ON
VK3105	Wearnes Hollingworth Ltd. Cambion Div. Peveril House Mill Bridge Castleton S30 2WR Yorks England 01433 620831 Yorks, England
VK7182	R H P Industrial Bearings Ltd. P.O. BOX 18 Newark Notts UK NG24 2JF
ABJ	Abercorn Aero Limited 7435 Chester Ave Montreal 16, QUE
ATC	UOP Instruments Div. of Universal Oil Product Greenwich, CT
AYG	Aviation Developments (Canada) Ltd. 2709 Yonge Street Toronto, ONT
BAC	Bendix Corporation, The Fisher Building Detroit 2, MI
CAU	Canadian Buckle Company, Ltd. 7010 Querbes Ave Montreal 15, QUE
CDL	Canada Decalomania Co., Ltd. Toronto, ONT
CTL	Carriere Technical Industries Ltd. 195 Nantucket Blvd, Scarborough, ONT
DRW	Donald Rope and Wire Cloth Ltd. 1004 Sargent Ave Winnipeg 3, MAN
DUM	Du Mont, Allen B., Lab., Inc. 760 Bloomfield Ave Clifton, NJ
FIA	Fiat Aircraft Toronto, ONT
GLP	Gladden Aircraft Prod. Corp. 635 W. Colorado Blvd Glendale 4, CA
HPL	Henry Company, The Paul 2310 S. La Cienega Street Los Angeles 34, CA
ICO	ITT Canon Electric Inc. Salem Division Pingree & Leavitt Sts Salem, MA
JAR	Jarry Hydraulics Limited 4384 St. Denis Street Montreal 18, QUE Changed to AXN (02121)
MHR	Company Limited 6277 Upper Lachine Road Montreal 28, QUE Changed to HOY (09504)

MSC	Minneapolis-Honeywell Reg. Co. Micro Switch Division 11 W. Spring Street Freeport, IL Changed to HOY (994580)
PAS	Pascal Hardware Co., Ltd., The J. 301 Craig Street W. Montreal 1, QUE
PER	Perth Metal Industries Perth, ONT
POO	Polypenco , Incorporated 2150 Fairmont Ave Reading, PA
RAU	Radium Dial Corporation 920 MacEachran Ave Montreal 8, QUE
RMB	R & M Bearings Canada Limited 1006 Mountain Street Montreal 25, QUE
SHI	Shakeproof Washer Co. Division of Illinois Tool Works Elgin, IL
STC	Metals & Controls, Incorporated Spencer Products 34 Forest Street Attleboro, MA Changed to MES (82647)
SWC	Stewart-Warner Corporation of Canada, Limited McDonald Ave Belleville, ONT
TBC	Thomas & Betts, Limited 751 Victoria Square Montreal 1, QUE
TCO	Thompson, H.I., of Canada, Ltd. 60 Johnson Street Guelph, ONT Changed to HIO (12305)

LIST 2 ABBREVIATIONS AND CONTRACTIONS

AAF	ARMY-AIR FORCE
AC	ALTERNATING CURRENT
ACFT	AIRCRAFT
ACTE	ACTUATING, OR
ADF	AUTOMATIC DIRECTION FINDER
ADI	ANTI DETONANT INJECTION
ADJ	ADJUSTABLE, ING, MENT
AIL	AILERON
AMP	AMPERE
AN	AIR FORCE-NAVY
AND	ARMY-NAVY DESIGN
APU	AUXILIARY POWER UNIT
AR	AS REQUIRED
ASSY	ASSEMBLY
ASW	ANTI SUBMARINE WARFARE
ATT	ATTACHING
AUX	AUXILIARY
BRG	BEARING
BRKDN	BREAKDOWN
BRKT	BRACKET
CONN	CONNECTOR, ION, OR
CON ROD	CONNECTING ROD
CTL	CONTROL
CTR	CENTRE
CYL	CYLINDER
D/FOG	DEFOGGING
D/FR	DEFROSTING
D/ICE	DEICER, ING
DC	DIRECT CURRENT
DEG	DEGREE
DIA	DIAMETER
DISTN	DISTRIBUTION
DWG	DRAWING
EFF	EFFECTIVE, ITY
ELEC	ELECTRICAL
EMP	EMPENNAGE
EMY	EMERGENCY
ENG	ENGINE
EO	ENGINEERING ORDER
EQUIP	EQUIPMENT
EXTN	EXTENDED, SION
FE	FIRE EXTINGUISHER, ING
FIG.	FIGURE
FM	FREQUENCY MODULATION
FREQ	FREQUENCY
FT	FOOT, FEET
FTG	FITTING
FUS	FUSELAGE
FWD	FORWARD
G	GRAVITY
GENL	GENERAL
G.S.M.	GOVERNMENT SUPPLIED MATERIAL
GYRO	GYROSCOPE
H/VENT	HEAT & VENT
HEX	HEXAGON
HF	HIGH FREQUENCY

HOR/STAB	HORIZONTAL STABILIZER
HP	HORSEPOWER
HYD	HYDRAULIC
{I}	INTERCHAGEABLE
ID	INSIDE DIAMETER
IDENT	IDENTIFICATION
IDI	INTEGRATED DESTINATION INDICATOR
IFF	IDENTIFICATION FRIEND OR FOE
IGN	IGNITION
IN.	INCH, ES
INBD	INBOARD
INCL	INCLUSIF
INCORP	INCORPORATED, ING
IND	INDICATING, OR
INST	INSTRUMENT
INSTL	INSTALLATION
INTER	INTERMEDIATE
JB	JUNCTION BOX
JCT	JUNCTION
LE	LEADING EDGE
LH	LEFT HAND
LORAN	LONG RANGE NAVIGATION
LUB	LUBRICATING, ION, OR
MACH	MACHINE
MECH	MECHANISM
MF	MEDIUM FREQUENCY
MHF	MEDIUM HIGH FREQUENCY
MIKE	MICROPHONE
MIN	MINUTE
MISC	MISCELANEOUS
MOD	MODIFICATION
MTG	MOUNTING
N/CAD	NICKEL CADMIUM
NAV	NAVIGATION, OR
NO.	NUMBER
NP	NON PROCURABLE
OD	OUTSIDE DIAMETER
OPR	OPERATION, OR, ION
OUTBD	OUTBOARD
OXY	OXYGEN
PCB	PRINTED CIRCUIT BOARD
PH	PHASE
PNEU	PNEUMATIC
POSN	POSITION
PP	POWER PLANT
PRESRZTN	PRESSURIZATION
PRESS	PRESSURE
PYRO	PYROTECHNIC
R	RADIUS
{R}	REPLACEABLE
RCVR/XMTR	RECEIVER/TRANSMITTER
REF	REFERENCE
REINF	REINFORCING, MENT
REL	RELEASE
REQD	REQUIRED
RF	RADIO FREQUENCY
RH	RIGHT HAND
RHEO	RHEOSTAT
RTNG	RETAINING

RTNR	RETAINER
RUD	RUDDER
SEL	SELECTOR
SERV	SERVICE
SOL	SOLENOID
SPCL	SPECIAL
SPEC	SPECIFICATION
STA	STATION
STAB	STABILIZER
STBD	STARBOARD
STD	STANDARD
STGR	STRINGER
STIFF	STIFFENER, ING
STRUCT	STRUCTURE, AL
SUB-ASSY	SUBASSEMBLY
SUBS	SUBSEQUENT
SPRT	SUPPORT, ING
SYNC	SYNCHRONOUS, IZER, IZING
SYS	SYSTEM
TACAN	TACTICAL AIR NAVIAGATION
TE	TRAILING EDGE
UHF	ULTRA HIGH FREQUENCY
UNIV	UNIVERSAL
UNIV/J	UNIVERSAL JOINT
V	VOLT, S
VA	VOLT AMPERE
VAC	VACUUM
VENT	VENTILATING, ION
VERT/STAB	VERTICAL STABILIZER
VHF	VERY HIGH FREQUENCY
W	WATT
WL	WATER LINE
X	BY (BETWEEN DIMENSIONS)

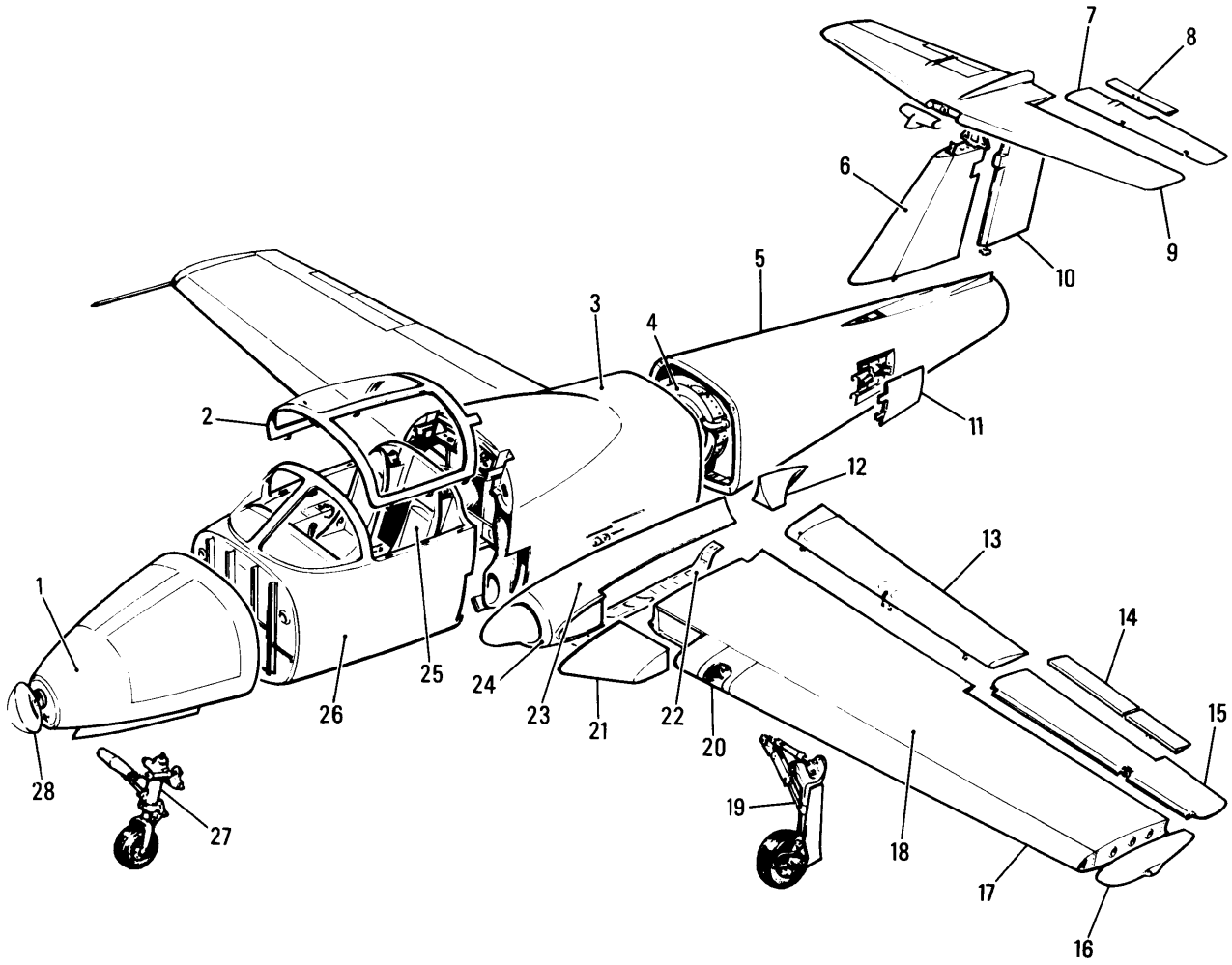

1	NOSE FUSELAGE	15	AILERON
2	COCKPIT CANOPY	16	WING TIP
3	CENTRE FUSELAGE	17	LEADING EDGE
4	POWER PLANT	18	WING BOX
5	REAR FUSELAGE	19	MAIN LANDING GEAR
6	VERTICAL STABILIZER	20	LANDING LAMP
7	ELEVATOR	21	DROOP SNOOT
8	ELEVATOR TAB	22	WING TO FUSELAGE FAIRING LOWER
9	HORIZONTAL STABILIZER	23	WING TO FUSELAGE FAIRING UPPER
10	RUDDER	24	DUCT FAIRING
11	SPEEDBRAKE	25	EJECTION SEATS
12	WING TO FUSELAGE FAIRING	26	FUSELAGE COCKPIT
13	WING FLAP	27	NOSE LANDING GEAR
14	AILERON TRIM TAB	28	TRANSPARENT NOSE

BMY01001

Chart 1 Tutor Aircraft General Arrangement

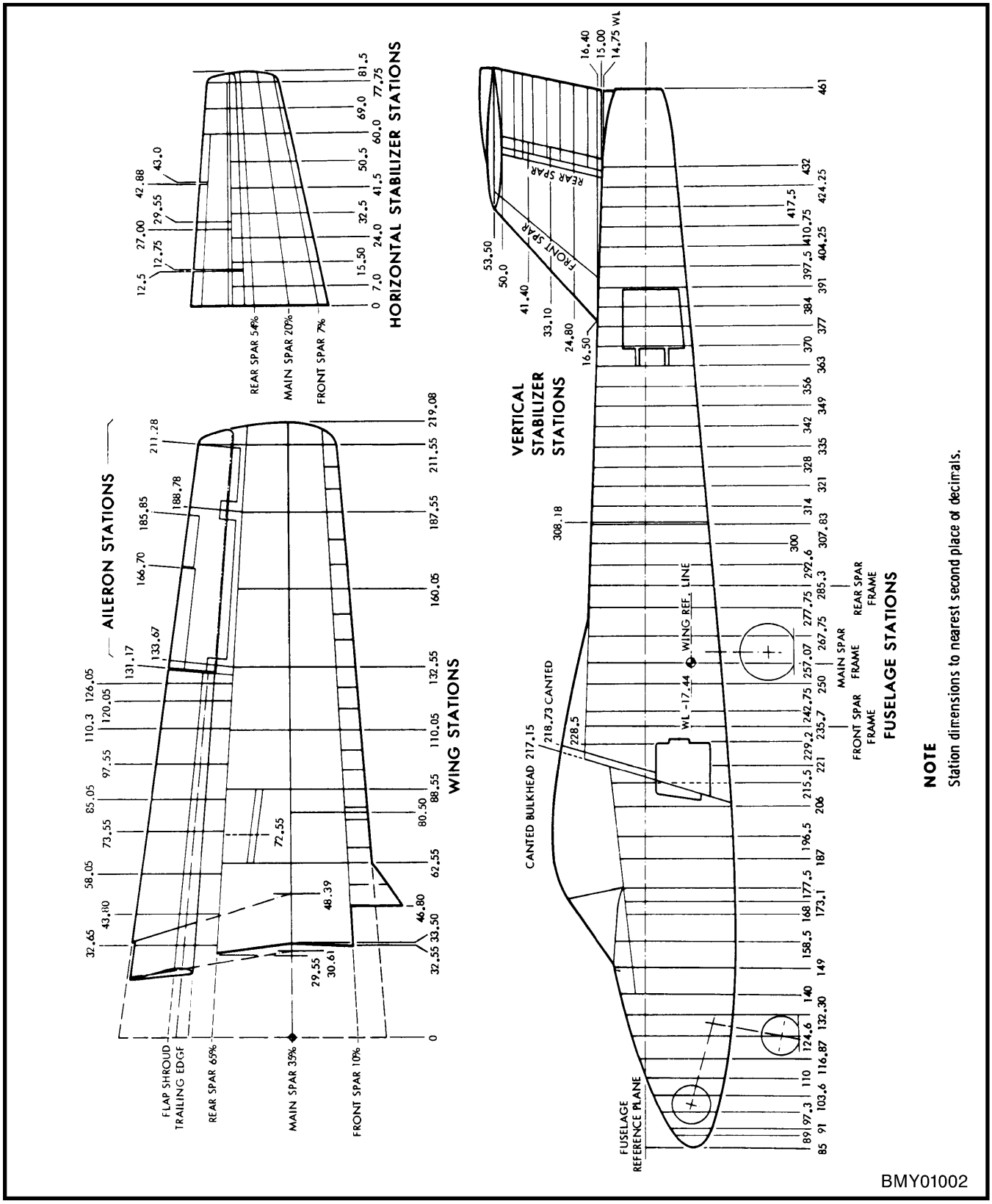

Chart 2 Tutor Aircraft Stations

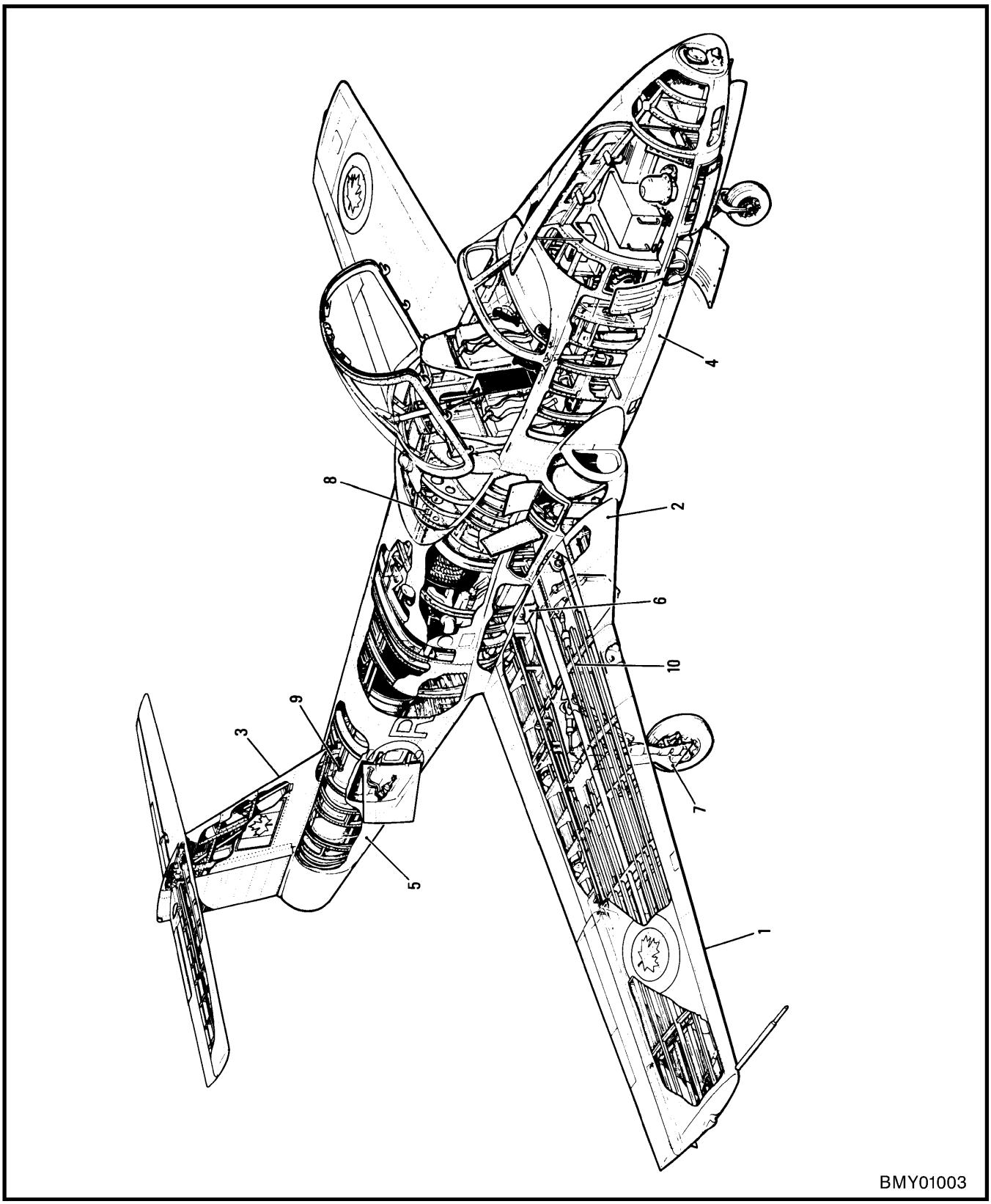

Figure 1-1 Tutor Aircraft General Assembly

FIGURE AND INDEX NUMBER	GROUP TUTOR AIRCRAFT ASSEMBLY MAJOR ASSEMBLY TUTOR AIRCRAFT GENERAL ASSEMBLY PART NUMBER	1 2 3 4 5 6 7 NOMENCLATURE	EFFEC-TIVITY	UNITS PER ASSY
1-1 -	41A-00001	AIRCRAFT GENL ASSY - COMPLETE		1
- 1	41A-10000-818	.WING GENL ASSY - COMPLETE (SEE SECTION 1)		REF
- 2	41A-35098	.FAIRING INSTL - FUSELAGE DROOP SNOOT (SEE SECTION 1)		REF
- 3	41A-20000	.EMPENNAGE GENL ASSY - COMPLETE (SEE SECTION 2)		REF
- 4	41A-35001	.FUSELAGE GENL ASSY - COMPLETE FORWARD (SEE SECTION 3)		REF
- 5	41A-36001-800	.FUSELAGE GENL ASSY - AFT (SEE SECTION 3)		REF
- 6	41A-35161	.FAIRING INSTL - FUSELAGE TO WING LOWER (SEE SECTION 3)		REF
- 7	41A-87500	.GEAR INSTL - COMPLETE LANDING (SEE SECTION 4)		REF
	41A-40200	.LOOSE EQUIPMENT INSTL - (SEE SECTION 17)		REF
- 8	41A-90004	FLIGHT CONTROLS INSTL - FORWARD FUSELAGE (SEE SECTION 7)		REF
- 9	41A-90651-800	FLIGHT CONTROLS INSTL - AILERON (SEE SECTION 7)		REF
-10	41A-90005	FLIGHT CONTROLS INSTL - AFT FUSELAGE (SEE SECTION 7)		REF
	NW4528201-1	REWIRE GENL ASSY (SEE SECTIONS 12 & 13)	B	REF
	NW4528201-2	REWIRE GENL ASSY (SEE SECTIONS 12 & 13)	C	REF
	NW4513200-1	CROSS COCKPIT GENL ASSY (SEE SECTIONS 7, 8, 11, 12 & 14)	A	REF
	NW4514200-1	SMOKE SYST GENL ASSY (SEE SECTIONS 6 & 12)	A	REF
	NW4515200-1	COMMON INSTL - (SEE SECTIONS 12 & 13)		REF
		-000-		
	A	FOR SNOWBIRD ARCFT ONLY		
	B	FOR ARCFT CT114102		
	C	FOR FLEET		

PART 2

PART ASSEMBLY PARTS LIST

SECTION 1

WING

TABLE OF CONTENTS

Figure	Title	Page
2-1-1	Complete Wing	2-1-2
2-1-2	Complete Wing Box	2-1-4
2-1-3	Wing Box Structure	2-1-6
2-1-4	Wing Skin Panels & Flap Shroud	2-1-10
2-1-5	Aileron Shroud	2-1-14
2-1-6	Droop Snoot Fairing, Wing Leading Edge & Tip	2-1-18
2-1-7	Wing Complete Flap	2-1-22
2-1-8	Wing Complete Aileron	2-1-24
2-1-9	Aileron Spring, Trim & Gear Tabs	2-1-28

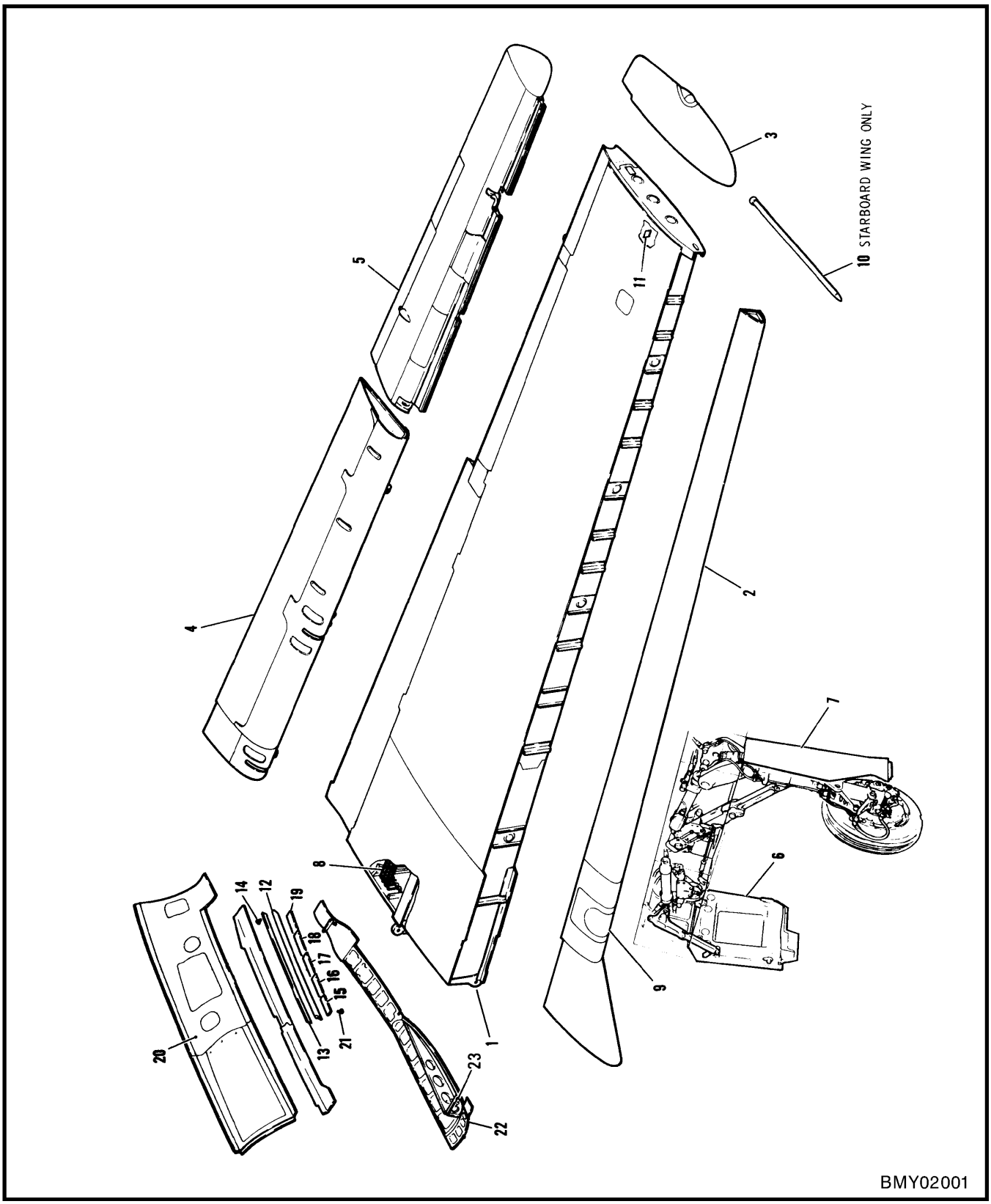

Figure 2-1-1 Complete Wing

FIGURE AND INDEX NUMBER	GROUP WING MAJOR ASSEMBLY COMPLETE WING PART NUMBER	1 2 3 4 5 6 7 NOMENCLATURE	EFFEC-TIVITY	UNITS PER ASSY
2-1-1 -	41A-10000-814	WING GENL ASSY - PORT (I)(SEE FIG. 1)		1
	41A-10000-817	WING GENL ASSY - STBD (I)		1
- 1	41A-10002-812	.BOX GENL ASSY - WING (SEE FIG. 2-1-2)		REF
- 2	41A-12100	.LEADING EDGE ASSY - WING (SEE FIG. 2-1-6)		REF
- 3	41A-11000	.TIP GENL ASSY - WING (SEE FIG. 2-1-6)		REF
- 4	41A-14000-800	.FLAP GENL ASSY - WING (SEE FIG. 2-1-7)		REF
- 5	41A-13101-812	.AILERON GENL ASSY - LH WING (SEE FIG. 2-1-8)		REF
- 6	41A-10520	.DOOR GENL ASSY - MAIN LANDING GEAR LH (SEE SECTION 4)		REF
- 7	41A-10550-804	.DOOR GENL ASSY - MAIN LANDING GEAR LEG LH (SEE SECTION 4)		REF
- 8	41A-42301	.HYDRAULIC SYS INSTL - MLG DOOR LH (SEE SECTION 8)		REF
- 9	41A-42103-58	.ELECTRICAL EQUIP INSTL - WING LE (LH) (SEE SECTION 12)		REF
-10	41A-42124-800	.PITOT STATIC SYS INSTL - WING (SEE SECTION 15)		REF
-11	S1043	.NAMEPLATE - (V88308)		1
	41A-35160-30	.FAIRING ASSY - WING TO FUSELAGE UPPER LH		1
	41A-35160-31	.FAIRING ASSY - WING TO FUSELAGE UPPER RH		1
-12	41A-35160-54	..SEAL - WING TO FUS UPPER FAIRING LH		1
	41A-35160-55	..SEAL - WING TO FUS UPPER FAIRING RH		1
-13	41A-35160-40	..STRIP - (SEAL RETAINER LH)		1
	41A-35160-41	..STRIP - (SEAL RETAINER RH)		1
-14	NAS623-3-2	..SCREW - (SEAL RETAINING)		15
-15	41A-35160-42	..SHIM - (SKIN LAMINATED LH)		1
	41A-35160-43	..SHIM - (SKIN LAMINATED RH)		1
-16	41A-35160-44	..SHIM - (SKIN LAMINATED LH)		1
	41A-35160-45	..SHIM - (SKIN LAMINATED RH)		1
-17	41A-35160-46	..SHIM - (SKIN LAMINATED LH)		1
	41A-35160-47	..SHIM - (SKIN LAMINATED RH)		1
-18	41A-35160-48	..SHIM - (SKIN LAMINATED LH)		1
	41A-35160-49	..SHIM - (SKIN LAMINATED RH)		1
-19	41A-35160-50	..SHIM - (SKIN LAMINATED LH)		1
	41A-35160-51	..SHIM - (SKIN LAMINATED RH)		1
-20	41A-35160-32	..SKIN - WING TO FUS UPPER FAIRING LH		1
	41A-35160-33	..SKIN - WING TO FUS UPPER FAIRING RH		1
-21	NAS1203-3	..BOLT		16
-22	41A-35161-2	.FAIRING ASSY - WING TO FUS LOWER LH (R)		1
	41A-35161-3	.FAIRING ASSY - WING TO FUS LOWER RH (R)		1
-23	41A-35170-1	..RIB - FRONT SPAR LH		1
	41A-3517-2	..RIB - REAR SPAR RH		1
		-000-		

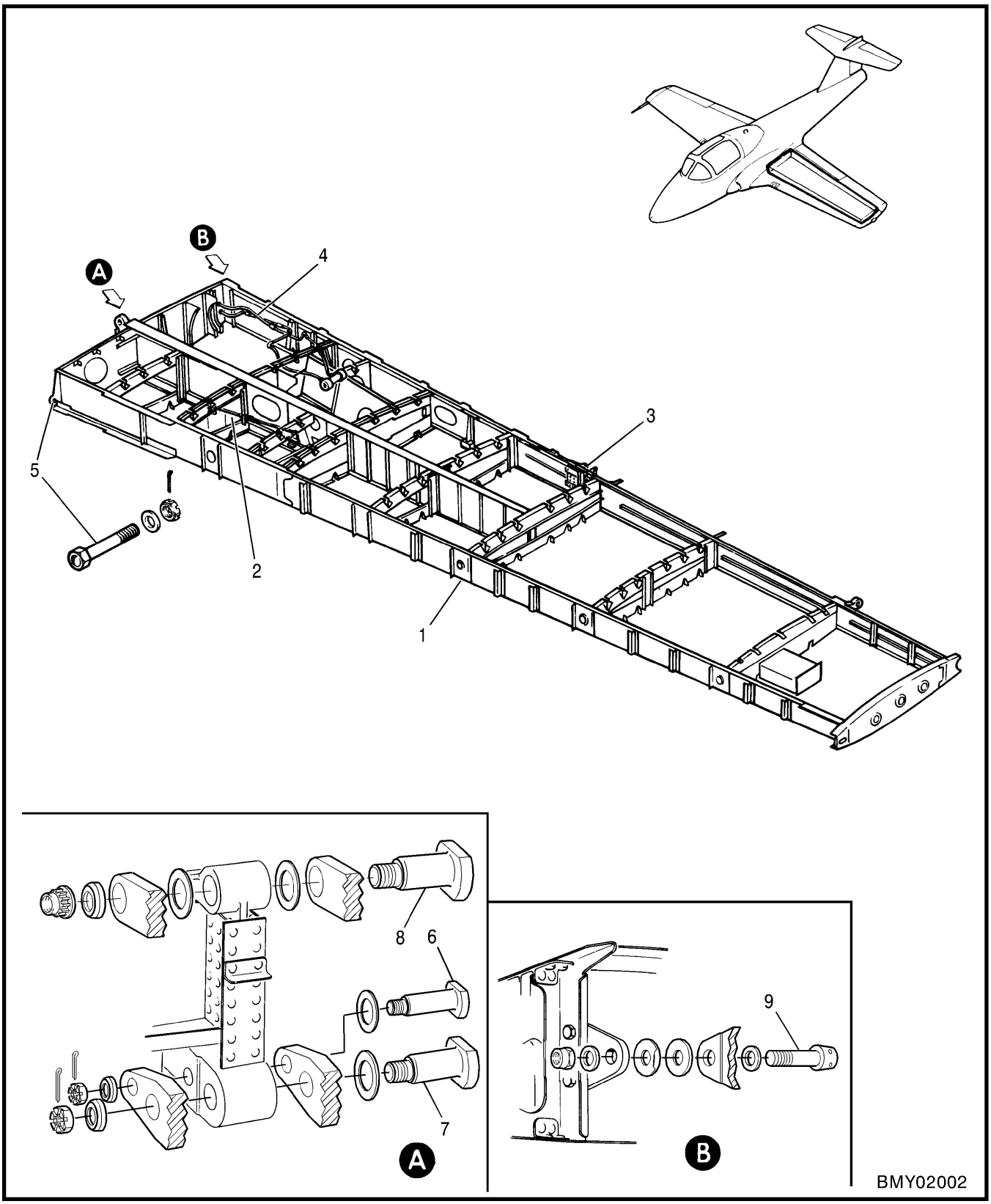

Figure 2-1-2 Complete Wing Box

FIGURE AND INDEX NUMBER	GROUP WING MAJOR ASSEMBLY COMPLETE WING BOX PART NUMBER	1 2 3 4 5 6 7 NOMENCLATURE	EFFEC-TIVITY	UNITS PER ASSY
2-1-2 -	41A-10002-812	BOX GENL ASSY - WING PORT (INTERCHANGEABLE) (FOR SPARES ORDER 41A-10002-816) (SEE FIG. 2-1-1)		1
	41A-10002-816	BOX GENL ASSY - WING PORT (INTERCHANGEABLE) (SPARE FOR 41A-10002-812)		
	41A-10002-815	BOX GENL ASSY - WING STBD (INTERCHANGEABLE) (FOR SPARES ORDER 41A-10002-817)		1
	41A-10002-817	BOX GENL ASSY - WING STBD (INTERCHANGEABLE) (SPARE FOR 41A-10002-815)		
- 1	41A-10003-810	.BOX STRUCTURE ASSY - WING (SEE FIG. 2-1-3)		REF
- 2	41A-87510-800	.LATCH MECHANISM INSTL - MAIN LANDING GEAR LEG DOOR (SEE SECTION 4)		REF
- 3	41A-90651-800	.AILERON CONTROL INSTL - WING (SEE SECTION 7)		REF
- 4	41A-42307	.HYDRAULIC SYS INSTL - FLAP ACTUATOR (SEE SECTION 8)		REF
	41A-42103-60	.ELECTRICAL EQUIP. INSTL - WING (SEE SECTION 12)		REF
- 5	NAS6209-22D	.BOLT - (WING FORWARD SPAR TO FUSELAGE)		1
	AN960PD916	.WASHER		1
	AN320-9	.NUT		1
	MS24665-359	.COTTER PIN		1
- 6	41A-10081	.BOLT - LOWER OUTBD MAIN SPAR ATTACHMENT		1
	S1246-66-45-32	.WASHER - (V88308) (UNDER BOLT HEAD)		1
	41-10018	.WASHER - LOWER MAIN SPAR ATTACHMENT		1
	AN320-12	.NUT		1
	MS24665-359	.COTTER PIN		1
- 7	41A-10082	.BOLT - LOWER INBD MAIN SPAR ATTACHMENT		1
	S1246-74-49-32	.WASHER - (V88308) (UNDER BOLT HEAD)		1
	41A-10080	.WASHER - LOWER INBD MAIN SPAR ATTACHMENT		1
	AN320-14	.NUT		1
	MS24665-360	.COTTER PIN		1
- 8	41A-10083	.BOLT - UPPER MAIN SPAR ATTACHMENT		1
	41A-10002-42	.SHIM - (UPPER MAIN SPAR)		AR
	41A-10002-44	.SHIM - (UPPER MAIN SPAR)		AR
	41A-10002-46	.SHIM - (UPPER MAIN SPAR)		AR
	41A-10002-48	.SHIM - (UPPER MAIN SPAR)		AR
	41A-10002-50	.SHIM - (UPPER MAIN SPAR)		AR
	41A-10002-52	.SHIM - (UPPER MAIN SPAR)		AR
	S1246-90-59-32	.WASHER - (V88308) (UNDER BOLT HEAD)		1
	41-10015	.WASHER - UPPER MAIN SPAR ATTACHMENT		1
	LHEB220-164	.NUT - (V72962)		1
- 9	MS20008-18	.BOLT - (WING REAR SPAR TO FUSELAGE)		1
	MS20002C8	.WASHER - (UNDER BOLT HEAD)		1
	41A-10002-18	.SHIM		1
	41-10016	.WASHER - WING REAR SPAR TO FUS JOINT		1
	AN960-816	.WASHER		1
	MS21045-8	.NUT		1

-000-

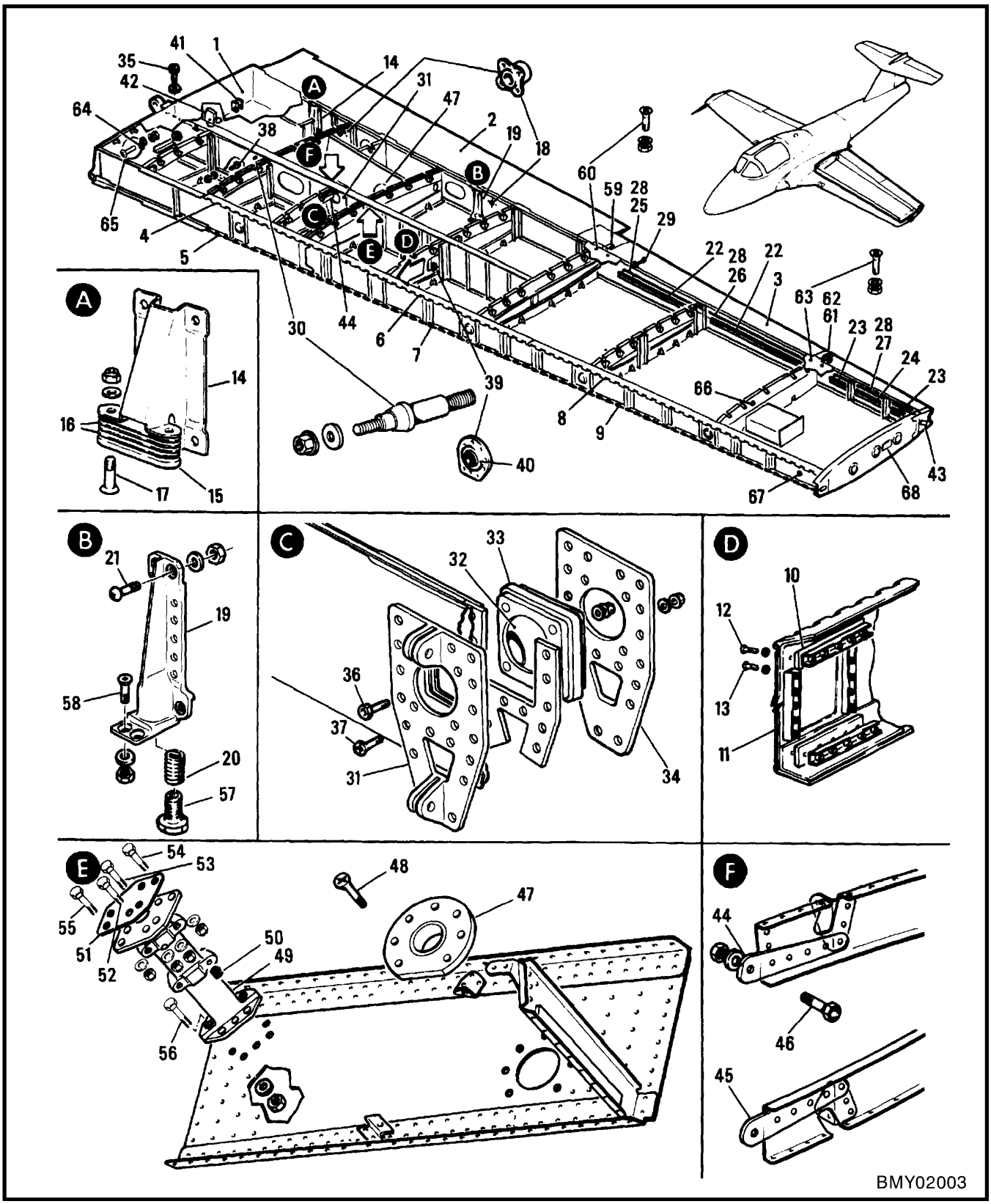

Figure 2-1-3 Wing Box Structure

FIGURE AND INDEX NUMBER	GROUP WING MAJOR ASSEMBLY WING BOX STRUCTURE PART NUMBER		1 2 3 4 5 6 7 NOMENCLATURE	EFFEC-TIVITY	UNITS PER ASSY
2-1-3 -	41A-10003-810		BOX STRUCTURE ASSY - WING PORT (I) (FOR SPARES ORDER 41A-10003-812) (SEE FIG. 2-1-2)		1
	41A-10003-812		BOX STRUCTURE ASSY - WING PORT (SPARE FOR 41A-10003-810)		
	41A-10003-811		BOX STRUCTURE ASSY - WING STBD (I) (FOR SPARES ORDER 41A-10003-813)		1
	41A-10003-813		BOX STRUCTURE ASSY - WING STBD (SPARE FOR 41A-10003-811)		
- 1	41A-10007		.PANEL ASSY - SKIN UPPER (SEE FIG. 2-1-4)		REF
	41A-10008		.PANEL ASSY - SKIN LOWER (SEE FIG. 2-1-4)		REF
- 2	41A-10009		.SHROUD ASSY - FLAP (SEE FIG. 2-1-4)		REF
- 3	41A-10010-800		.SHROUD INSTL - AILERON (SEE FIG. 2-1-5)		REF
	41A-10004		.SPAR ASSY - WING FORWARD PORT		1
	41A-10004-801		.SPAR ASSY - WING FORWARD STBD		1
- 4	41A-10004-72		..HALF HINGE - (SPAR UPPER PORT)		1
	41A-10004-73		..HALF HINGE - (SPAR UPPER STBD)		1
- 5	41A-10004-74		..HALF HINGE - (SPAR LOWER PORT)		1
	41A-10004-75		..HALF HINGE - (SPAR LOWER STBD)		1
- 6	41A-10004-76		..HALF HINGE - (SPAR UPPER PORT)		1
	41A-10004-77		..HALF HINGE - (SPAR UPPER STBD)		1
- 7	41A-10004-78		..HALF HINGE - (SPAR LOWER PORT)		1
	41A-10004-79		..HALF HINGE - (SPAR LOWER STBD)		1
- 8	41A-10004-80		..HALF HINGE - (SPAR UPPER PORT)		1
	41A-10004-81		..HALF HINGE - (SPAR UPPER STBD)		1
- 9	41A-10004-82		..HALF HINGE - (SPAR LOWER PORT)		1
	41A-10004-83		..HALF HINGE - (SPAR LOWER STBD)		1
-10	41A-10004-49		..PACKING - (UPPER)		1
	41A-10004-48		..PACKING - (LOWER)		1
	NAS689P7-5		..NUT		2
	NAS689P6-5		..NUT		2
-11	41A-10004-14		..COVER - (SPAR WEB APERTURE)		1
-12	NAS623-3-5		..SCREW		10
-13	NAS623-3-2		..SCREW		10
	AN960-10L		..WASHER		20
	41A-10005		.SPAR ASSY - WING REAR PORT		1
	41A-10005-1		.SPAR ASSY - WING REAR STBD		1
	REO12A004-059-6	*	..STRIP - REINFORCING		2
	MS20426DD6-9	*	..RIVET		20
	41A-10005-28		..SUPPORT ASSY - (WS 50 PORT)		1
	41A-10005-29		..SUPPORT ASSY - (WS 50 STBD)		1
-14	41A-10005-46		...SUPPORT - (WS 50 PORT)		1
	41A-10005-47		...SUPPORT - (WS 50 STBD)		1
-15	41A-10005-72		...PLATE		1
-16	41A-10005-74		...SHIM		AR
-17	MS24694-53		...SCREW		2
	AN960PD10		...WASHER		2
	MS21042L3		...NUT		2
-18	41A-90661		..BEARING - FLANGED (AILE RON CTL REAR SPAR)		2
	41A-10046		..FITTING ASSY - WING JACKING LH		1
	41A-10046-1		..FITTING ASSY - WING JACKING RH		1
-19	41A-10046-2		...FITTING - LH		1
	41A-10046-3		...FITTING - RH		1
-20	MS21209F8-15		...INSERT		1
-21	NAS623-3-5		..SCREW		4
	AN960PD10		..WASHER		4
	MS21042L3		..NUT		4
-22	41A-10005-40		..GANG CHANNEL		2
		*	IAW C-12-114-000/CF-387		

FIGURE AND INDEX NUMBER	GROUP WING MAJOR ASSEMBLY WING BOX STRUCTURE PART NUMBER	1 2 3 4 5 6 7 NOMENCLATURE	EFFEC-TIVITY	UNITS PER ASSY
2-1-3 -23	41A-10005-42	..GANG CHANNEL		2
-24	41A-10005-78	..GANG CHANNEL		1
-25	41A-10005-34	..STRIP - (PORT)		1
	41A-10005-35	..STRIP - (STBD)		1
-26	41A-10005-36	..STRIP - (PORT)		1
	41A-10005-37	..STRIP - (STBD)		1
-27	41A-10005-38	..STRIP - (PORT)		1
	41A-10005-39	..STRIP - (STBD)		1
-28	NO NUMBER	..STRIP - (IAW C-12-114-000/CF-222)		3
-29	NAS1203-3	..SCREW		26
	41A-10006-102	.SPAR ASSY - WING MAIN PORT		1
	41A-10006-103	.SPAR ASSY - WING MAIN STBD		1
-30	41A-87523	..SPIGOT - MAIN LANDING GEAR DOOR		1
	AN960PD616	..WASHER		1
	ZEB1845-064	..NUT - (V72962)		1
-31	41A-10029	..PLATE - WS 80 MOUNTING		1
-32	AM1655	..BEARING ASSY - (V83086) (MAIN LANDING GEAR)		1
-33	41A-10006-54	..SHIM - (BEARING)		4
-34	41A-10028	..PLATE - WS 80 MOUNTING		1
-35	NAS1106-9	..BOLT		3
	AN960PD616	..WASHER		3
	MS21042L6	..NUT		3
-36	NAS6204-16	..BOLT		10
-37	NAS1204-15	..BOLT		12
-38	NAS6204-9	..BOLT		2
	AN960PD416	..WASHER		48
	MS21042L4	..NUT		24
	41A-10027	..HOUSING ASSY - PYLON SUPPORT		1
-39	41A-10027-2	...HOUSING - PYLON SUPPORT		1
-40	LHA8	...BEARING - (V73134)		1
	41A-10038	.RIB INSTL - WING ROOT PORT		1
	41A-10038-1	.RIB INSTL - WING ROOT STBD		1
-41	41A-10045	..PLATE - BEARING (MLG DOOR HINGE)		2
-42	41A-10085	FITTING - FWD HINGE PIVOT - MLG DOOR PORT		1
		OR		
	41A-10085-2 *	FITTING - FWD HINGE PIVOT - MLG DOOR PORT		
	41A-10085-1	FITTING - FWD HINGE PIVOT - MLG DOOR STBD		1
		OR		
	41A-10085-3 *	FITTING - FWD HINGE PIVOT - MLG DOOR STBD		
	41A-10039-800	.RIB ASSY - WS 211 INTERSPAR PORT		1
	41A-10039-803	.RIB ASSY - WS 211 INTERSPAR STBD		1
-43	41A-10039-58	..RETAINER - SEAL (PORT)		1
	41A-10039-59	..RETAINER - SEAL (STBD)		1
	NAS623-3-1	..SCREW - (SEAL RETAINER)		2
	41A-10035-4	.RIB ASSY - WS 80 INTERSPAR PORT		1
	41A-10035-5	.RIB ASSY - WS 80 INTERSPAR STBD		1
-44	41A-10026-2	..LUG - RIB WS 80 (UPPER)		1
-45	41A-10026-4	..LUG - RIB WS 80 (LOWER)		1
-46	NAS6204-9	.BOLT - (RIB TO MAIN SPAR)		2
	AN960PD416	.WASHER		4
	MS21042L4	.NUT		2
	41A-10040-2	.DIAPHRAGM ASSY - MAIN LANDING GEAR LH		1
	41A-10040-3	.DIAPHRAGM ASSY - MAIN LANDING GEAR RH		1
	41-10121-800	..PLATE ASSY - LANDING GEAR MOUNTING		1
-47	41-10121-4	...PLATE - LANDING GEAR MOUNTING		1
	41-87015	...BUSHING - MAIN LANDING GEAR		1
	*	AS DIRIECTED BY NDHQ ASIP PROGRAM		

FIGURE AND INDEX NUMBER	GROUP WING MAJOR ASSEMBLY WING BOX STRUCTURE PART NUMBER		1 2 3 4 5 6 7 NOMENCLATURE	EFFEC-TIVITY	UNITS PER ASSY
2-1-3 -48	NAS1154-6	*	..BOLT		7
			OR		
	NAS1155-6	*	..BOLT		
	AN960PD416	*	..WASHER		7
			OR		
	AN960PD516	*	..WASHER		
	AN960PD416L	*	..WASHER		AR
			OR		
	AN960PD516L	*	..WASHER		
	41A-10054		.BEAM ASSY - SIDE STRUT MOUNTING LH		1
	41A-10054-1		.BEAM ASSY - SIDE STRUT MOUNTING RH		1
-49	41A-10054-2		..BEAM - LH		1
	41A-10054-3		..BEAM - RH		1
-50	MS21209F5-15		..INSERT		4
-51	41A-10049-20		.SHIM - (MOUNTING BEAM)		1
-52	NAS6204-10		.BOLT		3
-53	NAS6204-11		.BOLT		1
-54	NAS6204-8		.BOLT		1
-55	NAS6204-5		.BOLT		1
-56	NAS6204-4		.BOLT		5
	AN960PD416		.WASHER		11
	MS21042L4		.NUT		11
-57	41A-35204		.PLUG - JACKING POINT BOLT		1
-58	MS24694-53		.SCREW		2
	AN960PD10L		.WASHER		2
	MS21042L3		.NUT		2
-59	41A-10064		.BRACKET - AILERON INBOARD HINGE		1
	41A-10003-90		.PACKING - (HINGE BRACKET)		2
	41A-10003-124		.SHIM - (HINGE BRACKET)		2
-60	NAS1203-10		.BOLT		8
	AN960PD10		.WASHER		8
	MS21042L3		.NUT		8
	41A-10062		.BRACKET ASSY - AILERON OUTBD HINGE LH		1
	41A-10062-1		.BRACKET ASSY - AILERON OUTBD HINGE RH		1
-61	41A-10062-2		..BRACKET - AILERON OUTBOARD HINGE LH		1
	41A-10062-3		..BRACKET - AILERON OUTBOARD HINGE RH		1
-62	MS27643-6		..BEARING		1
	MS16625-1143		..RING		1
	41A-10003-100		.PACKING - (HINGE BRACKET)		2
	41A-10003-122		.SHIM - (HINGE BRACKET)		2
-63	NAS1203-10		.BOLT - (OUTBOARD HINGE)		8
	AN960PD10		.WASHER		8
	MS21042L3		.NUT		8
-64	AN742-8		.CLAMP - (ELECTRICAL CONDUIT ROOT RIB)		1
-65	MS35218-42		.SCREW		1
	AN960D8L		.WASHER		1
	MS21042L08		.NUT		1
-66	MS35489-14		.GROMMET - (WS 187 RIB)		1
-67	MS35489-11		.GROMMET - (WS 204 FWD SPAR)		1
-68	S1043		.NAMEPLATE - (V88308)		1
			-000-		
		*	IAW C-12-114-000/CD-020		

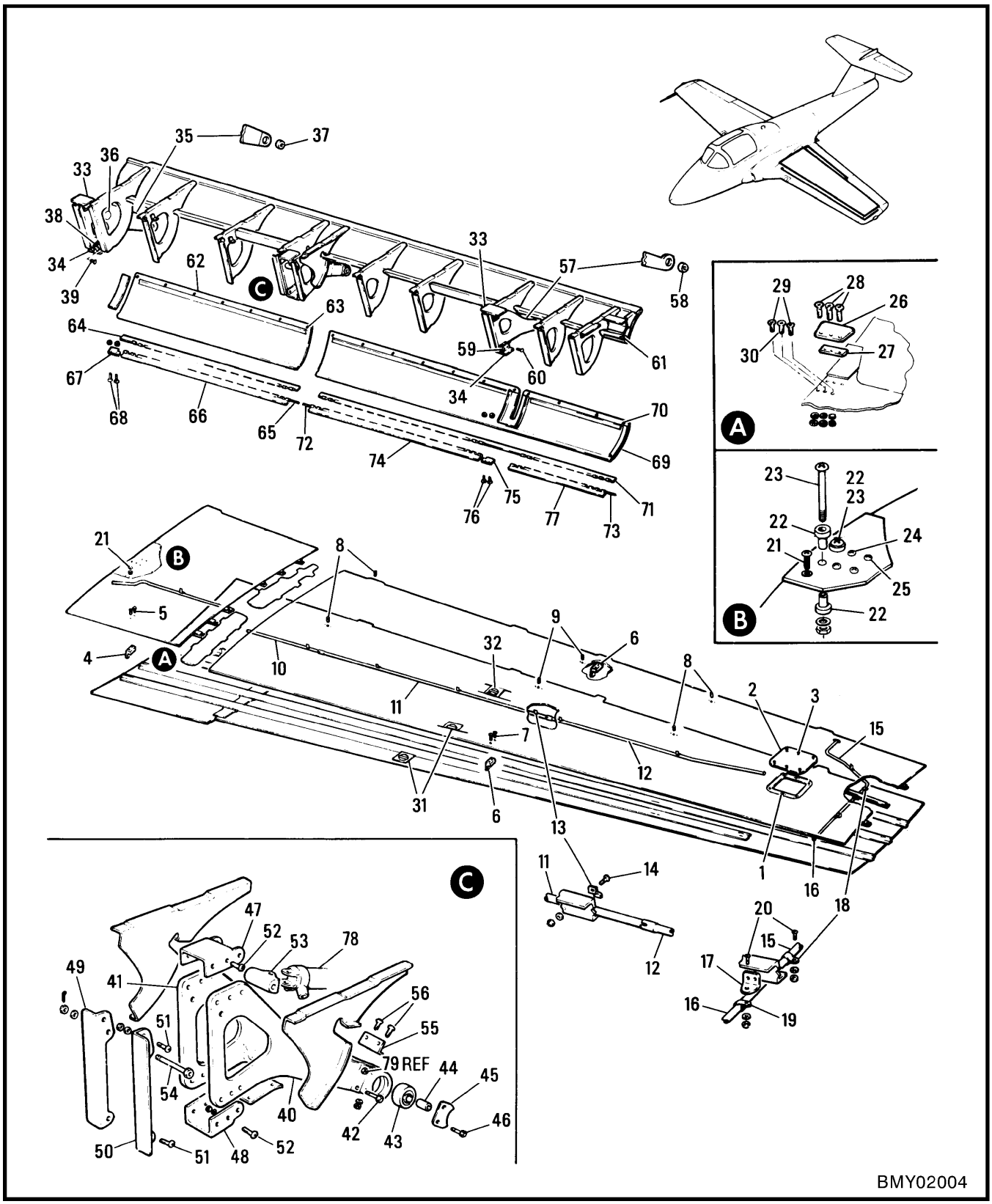

Figure 2-1-4 Wing Skin Panels & Flap Shroud

FIGURE AND INDEX NUMBER	GROUP WING			EFFEC-TIVITY	UNITS PER ASSY
	MAJOR ASSEMBLY WING SKIN PANELS & FLAP SHROUD				
	PART NUMBER		1 2 3 4 5 6 7 NOMENCLATURE		
2-1-4 -	41A-10007		PANEL ASSY - SKIN UPPER PORT (SEE FIG. 2-1-3)		1
	41A-10007-1		PANEL ASSY - SKIN UPPER STBD		1
- 1	214-16D		.RECEPTACLE - (V71286)		6
	41A-10007-26		.DOOR ASSY - (FLUX VALVE ACCESS PORT) (I)		1
	41A-10007-27		.DOOR ASSY - (ANTENNA ACCESS STBD) (I)		1
- 2	41A-10024-6		..DOOR - (FLUX VALVE ACCESS PORT)		1
	41A-10024-7		..DOOR - (ANTENNA ACCESS STBD)		1
	40G32-1A		..GROMMET - (V71286)		6
	40G26-1		..SNAP RING - (V71286)		6
- 3	40S56-4A		..STUD - (V71286)		6
- 4	41-10173-2		.BRACKET ASSY - HOISTING POINT (WS 46 FORWARD)		1
	41-10173-6		..BRACKET		1
	MS21209F415		..INSERT		2
- 5	NAS1204-1		.BOLT		2
- 6	41-10173-4		.BRACKET ASSY - HOISTING POINT (WS 132)		2
	41-10173-8		..BRACKET		1
	MS21209F415		..INSERT		2
- 7	NAS1204-1		.BOLT		4
- 8	AN565F1032H4		.SET SCREW - (WS 78 & 165 RIG BOARD PLUG)		4
- 9	AN565F428H4		.SET SCREW - (AIL STA 131 RIG BOARD PLUG)		2
-10	41A-42151-10		.CONDUIT - WING ELECTRICAL		1
-11	41A-42151-14		.CONDUIT - WING ELECTRICAL		1
-12	41A-42151-12		.CONDUIT - WING ELECTRICAL		1
-13	41A-42149-8		.SUPPORT - WING TIP AILERON ELEC CONDUIT		7
-14	MS35218-42		.SCREW		7
	AN960D8L		.WASHER		7
	MS21044D08		.NUT		7
-15	41A-42147		.CONDUIT - AILERON ELECTRICAL (PORT)		1
-16	41A-42148		.CONDUIT ASSY - AILERON ELECTRICAL (PORT)		1
-17	41A-42149-4		.BRACKET - WING TIP (PORT)		3
-18	AN735D6		.CLAMP - (PORT)		1
-19	AN742D6		.CLAMP - (PORT)		3
-20	MS35218-42		.SCREW - (PORT)		4
	AN960D8L		.WASHER - (PORT)		4
	MS21044D08		.NUT - (PORT)		4
-21	NAS1103-4		.BOLT - (SKIN RETAINING)		17
	AN960PD10L		.WASHER		15
	AN960PD10		.WASHER		4
-22	41A-10003-953	*	.BUSHING		4
-23	NAS623-3-8	*	.SCREW		2
	AN960PD10	*	.WASHER		2
	MS21042L3	*	.NUT		2
-24	NAS623-3-7		.SCREW - (SKIN RETAINING)		2
-25	NAS623-3-5		.SCREW - (SKIN RETAINING)		2
	AN960PD10		.WASHER		4
	MS21042L3		.NUT		4
	41A-10008		PANEL ASSY - SKIN LOWER PORT (SEE FIG. 2-1-3)		1
	41A-10008-1		PANEL ASSY - SKIN LOWER STBD		1
-26	41A-10047-16		.MEMBER - DOOR LANDING		1
-27	41A-10047-18		.MEMBER - DOOR LANDING		1
-28	NAS623-3-4		.SCREW		3
-29	NAS623-3-6		.SCREW		2
-30	NAS1203-6		.BOLT		1
	AN960PD10		.WASHER		6
	MS21042L3		.NUT		6
		*	IAW C-12-114-000/CF-301		

FIGURE AND INDEX NUMBER	GROUP WING MAJOR ASSEMBLY WING SKIN PANELS & FLAP SHROUD PART NUMBER	1 2 3 4 5 6 7 NOMENCLATURE	EFFEC-TIVITY	UNITS PER ASSY
2-1-4 -31	41A-10048-4	.DOOR ASSY - WING TANK PYLON (I)		2
	41A-10048-8	..DOOR - WING TANK PYLON		1
	41A-10048-20	..SCREW - (MADE FROM AN507-1032R14)		1
-32	41A-10048-800	.DOOR ASSY - WING TANK PYLON (I)		1
	41A-10048-6	..DOOR - WING TANK PYLON		1
	41A-10048-20	..SCREW - (MADE FROM AN507-1032R14)		2
	41A-10009	SHROUD ASSY - FLAP PORT (SEE FIG. 2-1-3)		1
	41A-10009-1	SHROUD ASSY - FLAP STBD		1
-33	41A-10068	.BRACKET - FLAP HINGE LH (PORT LOWER & STBD UPPER)		2
-34	41A-10068-1	.BRACKET - FLAP HINGE RH (PORT UPPER & STBD LOWER)		2
	41A-10058-6	.LEVER ASSY - FLAP INBOARD HINGE		1
-35	41A-10063-8	..LEVER - FLAP INBOARD HINGE		1
-36	ADB8V	..BEARING - (V83086)		1
-37	MS27643-4	..BEARING		1
-38	41A-10009-118	.SHIM - (HINGE LEVER)		2
-39	NAS623-3-13	.SCREW		4
	AN960PD10	.WASHER		4
	MS21042L3	.NUT		4
	41A-10073	.LEVER ASSY - FLAP CENTRE HINGE		1
-40	41A-10072	..LEVER - FLAP CENTRE HINGE LH		1
-41	41A-10072-1	..LEVER - FLAP CENTRE HINGE RH		1
-42	NAS6204-18	..BOLT		1
	AN960PD416	..WASHER		1
	MS21042L4	..NUT		1
-43	MS20206DSP5	..BEARING		1
-44	41-14013-2	..BUSHING - FLAP CENTRE HINGE		2
-45	41A-10074	..PLATE - FLAP CENTRE HINGE BEARING RTNG		2
-46	NAS1103-14	..BOLT		2
	AN960PD10	..WASHER		2
	MS21042L3	..NUT		2
-47	41-10164-3	.CHANNEL - FLAP CENTRE HINGE RH (PORT UPPER & STBD LOWER)		1
-48	41-10164-2	.CHANNEL - FLAP CENTRE HINGE LH (PORT LOWER & STBD UPPER)		1
-49	41A-10061-56	.ANGLE - LH		1
	41A-10061-57	.ANGLE - RH		1
-50	41A-10061-52	.ANGLE - LH		1
	41A-10061-53	.ANGLE - RH		1
-51	NAS623-3-8	.SCREW		4
-52	NAS623-3-7	.SCREW		8
	AN960PD10	.WASHER		12
	MS21042L3	.NUT		12
-53	41A-10071	.TRUNNION - FLAP ACTUATOR		1
-54	NAS6204-50D	.BOLT		1
	41A-10009-952	.BUSHING - (LH)		AR
	AN960PD416	.WASHER		1
	AN320-4	.NUT		1
	MS24665-153	.COTTER PIN		1
-55	41A-10061-129	.ANGLE - (CENTRE HINGE PORT)		1
	41A-10061-128	.ANGLE - (CENTRE HINGE STBD)		1
-56	NAS623-3-3	.SCREW		2
	AN960PD10	.WASHER		2
	MS21042L3	.NUT		2
	41A-10057	.LEVER ASSY - FLAP OUTBOARD HINGE		1
-57	41A-10063-2	..LEVER - FLAP OUTBOARD HINGE		1
-58	AN206DSP4	..BEARING		1
-59	41A-10009-118	.SHIM - (HINGE LEVER)		2

FIGURE AND INDEX NUMBER	GROUP WING MAJOR ASSEMBLY WING SKIN PANELS & FLAP SHROUD PART NUMBER	1 2 3 4 5 6 7 NOMENCLATURE	EFFEC-TIVITY	UNITS PER ASSY
2-1-4 -60	NAS623-3-13	.SCREW		4
	AN960PD10	.WASHER		4
	MS21042L3	.NUT		4
-61	214-16	.RECEPTACLE - (V71286)		18
	41A-10009-2	.DOOR ASSY - (SHROUD INBD PORT) (I)		1
	41A-10009-3	.DOOR ASSY - (SHROUD INBD STBD) (I)		1
-62	41A-10061-26	..DOOR - (SHROUD PORT)		1
	41A-10061-27	..DOOR - (SHROUD STBD)		1
	4002G	..GROMMET - (V71286)		7
	R4G	..SNAP RING - (V71286)		7
-63	40S5-3	..STUD - (V71286)		7
-64	41A-10061-110	..HALF HINGE - (PORT)		1
	41A-10061-111	..HALF HINGE - (STBD)		1
-65	41A-10009-106	..PIN - HINGE		1
-66	41A-10061-102	.HALF HINGE - (INBOARD DOOR PORT)		1
	41A-10061-103	.HALF HINGE - (INBOARD DOOR STBD)		1
-67	41A-10061-124	.STOP - (DOOR HINGE PORT)		1
	41A-10061-125	.STOP - (DOOR HINGE STBD)		1
-68	NAS623-2-2	.SCREW		2
R	MS21042L08	.NUT		2
	41A-10009-4	.DOOR ASSY - (SHROUD OUTBD PORT) (I)		1
	41A-10009-5	.DOOR ASSY - (SHROUD OUTBD STBD) (I)		1
-69	41A-10009-154	..DOOR ASSY - (SHROUD WELDED PORT)		1
	41A-10009-155	..DOOR ASSY - (SHROUD WELDED STBD)		1
	4002G	..GROMMET - (V71286)		11
	R4G	..SNAP RING - (V71286)		11
-70	40S5-3	..STUD - (V71286)		11
-71	41A-10061-108	..HALF HINGE - (PORT)		1
	41A-10061-109	..HALF HINGE - (STBD)		1
-72	41A-10009-105	..PIN - HINGE		1
-73	41A-10009-104	..PIN - HINGE		1
-74	41A-10061-104	.HALF HINGE - (OUTBD DOORINNER PORT)		1
	41A-10061-105	.HALF HINGE - (OUTBD DOOR INNER STBD)		1
-75	41A-10061-127	.STOP - (DOOR INNER HINGE PORT)		1
	41A-10061-126	.STOP - (DOOR INNER HINGE STBD)		1
-76	NAS1202-3	.SCREW		2
	MS21042L8	.NUT		2
-77	41A-10061-106	.HALF HINGE - (OUTBD DOOR OUTER PORT)		1
	41A-10061-107	.HALF HINGE - (OUTBD DOOR OUTER STBD)		1
-78	6350-1	ACTUATOR ASSY - FLAP (SEE SECTION 8)		REF
-79	NAS6204-19	BOLT - (SEE FIG. 2-1-7)		REF

-000-

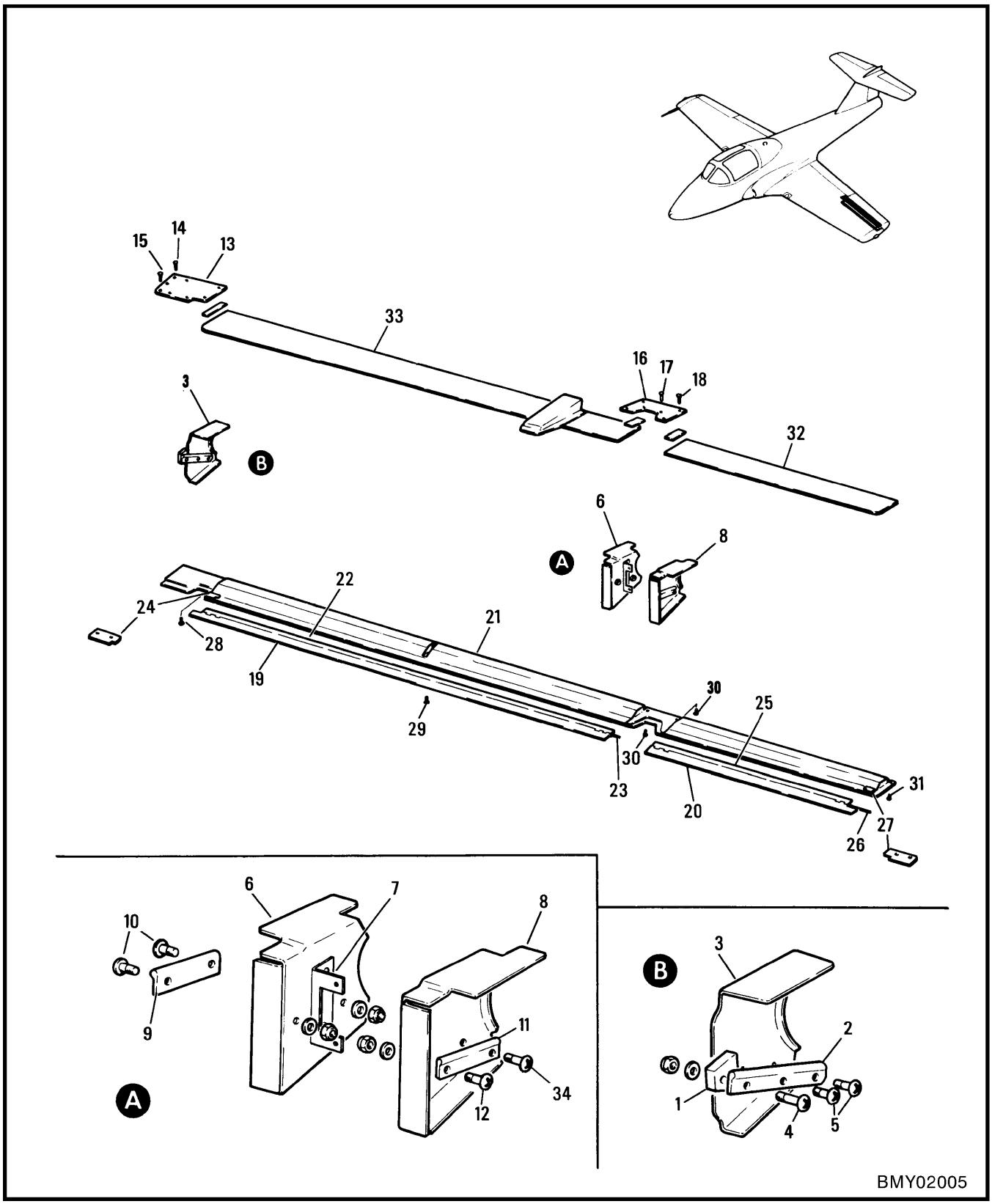

Figure 2-1-5 Aileron Shroud

FIGURE AND INDEX NUMBER	GROUP WING MAJOR ASSEMBLY AILERON SHROUD PART NUMBER	1 2 3 4 5 6 7 NOMENCLATURE	EFFEC-TIVITY	UNITS PER ASSY
2-1-5 -	41A-10010-800	SHROUD INSTL - AILERON PORT (SEE FIG. 2-1-3)		NP
	41A-10010-1	SHROUD INSTL - AILERON STBD		NP
- 1	41A-10010-118	.BLOCK - PHENOLIC LH		1
	41A-10010-119	.BLOCK - PHENOLIC RH		1
- 2	41A-10010-140	.RETAINER - SEAL LH		1
	41A-10010-141	.RETAINER - SEAL RH		1
- 3	41A-10010-84	.DIAPHRAGM - LH		1
	41A-10010-85	.DIAPHRAGM - RH		1
- 4	NAS623-3-10	.SCREW		1
	AN960PD10	.WASHER		1
	MS21042L3	.NUT		1
- 5	NAS623-3-2	.SCREW		2
- 6	41A-10010-156	.DIAPHRAGM - LH		1
- 7	41A-10010-158	.BRACKET ASSY - LH		1
	41A-10010-83	.DIAPHRAGM - RH		1
- 8	41A-10010-80	.DIAPHRAGM - LH		1
	41A-10010-81	.DIAPHRAGM - RH		1
- 9	41A-10010-142	.RETAINER - SEAL LH		1
	41A-10010-143	.RETAINER - SEAL RH		1
-10	NAS623-3-2	.SCREW		2
	AN960PD10	.WASHER		2
	MS21042L3	.NUT		2
-11	41A-10010-144	.RETAINER - SEAL LH		1
	41A-10010-145	.RETAINER - SEAL RH		1
-12	NAS623-3-2	.SCREW		1
	AN960PD10	.WASHER		1
	MS21042L3	.NUT		1
-13	41A-10010-88	.COVER PLATE - (AILERON INBD HINGE PORT)(I)		1
	41A-10010-89	.COVER PLATE - (AILERON INBD HINGE STBD)(I)		1
-14	NAS1203-2	.BOLT		4
-15	NAS1203-3	.BOLT		4
-16	41A-10010-86	.COVER PLATE - (AIL. OUTBD HINGE PORT) (I)		1
	41A-10010-87	.COVER PLATE - (AIL. OUTBD HINGE STBD) (I)		1
-17	NAS1203-2	.BOLT		2
-18	NAS1203-3	.BOLT		4
-19	41A-10010-96	.HALF HINGE - (SHROUD DOOR INBD PORT)		1
	41A-10010-97	.HALF HINGE - (SHROUD DOOR INBD STBD)		1
-20	41A-10010-92	.HALF HINGE - (SHROUD DOOR OUTBD PORT)		1
	41A-10010-93	.HALF HINGE - (SHROUD DOOR OUTBD STBD)		1
	41A-10010-184	.DOOR ASSY - (AILERON SHROUD PORT) (I)		1
	41A-10010-185	.DOOR ASSY - (AILERON SHROUD STBD) (I)		1
-21	41A-10010-182	..DOOR ASSY - (SHROUD BONDED PORT)		1
	41A-10010-183	..DOOR ASSY - (SHROUD BONDED STBD)		1
-22	41A-10010-94	..HALF HINGE - (DOOR INBOARD PORT)		1
	41A-10010-95	..HALF HINGE - (DOOR INBOARD STBD)		1
-23	41A-10010-98	..PIN - HINGE		1
-24	41A-10010-102	..STOP - (DOOR INBOARD HINGE PORT)		1
	41A-10010-103	..STOP - (DOOR INBOARD HINGE STBD)		1
-25	41A-10010-90	..HALF HINGE - (DOOR OUTBOARD PORT)		1
	41A-10010-91	..HALF HINGE - (DOOR OUTBOARD STBD)		1
-26	41A-10010-99	..PIN - HINGE		1
-27	41A-10010-100	..STOP - (DOOR OUTBD HINGE PORT)		1
	41A-10010-101	..STOP - (DOOR OUTBD HINGE STBD)		1
-28	NAS1203-4	..BOLT - (DOOR)		2
-29	NAS1203-6	..BOLT		1
-30	NAS1203-3	..BOLT		2

FIGURE AND INDEX NUMBER	GROUP WING MAJOR ASSEMBLY AILERON SHROUD PART NUMBER	1 2 3 4 5 6 7 NOMENCLATURE	EFFEC-TIVITY	UNITS PER ASSY
2-1-5 -31	NAS1203-2	..BOLT		1
-32	41A-10010-2	.SHROUD STRIP - (BONDED SUB ASSY LH OUTER)		1
	41A-10010-3	.SHROUD STRIP - (BONDED SUB ASSY RH OUTER)		1
-33	41A-10010-4	.SHROUD STRIP - (BONDED SUB ASSY LH INNER)		1
	41A-10010-5	.SHROUD STRIP - (BONDED SUB ASSY RH INNER)		1
-34	NAS623-3-2	SCREW - (SEE FIG. 2-1-8)		REF
		-000-		

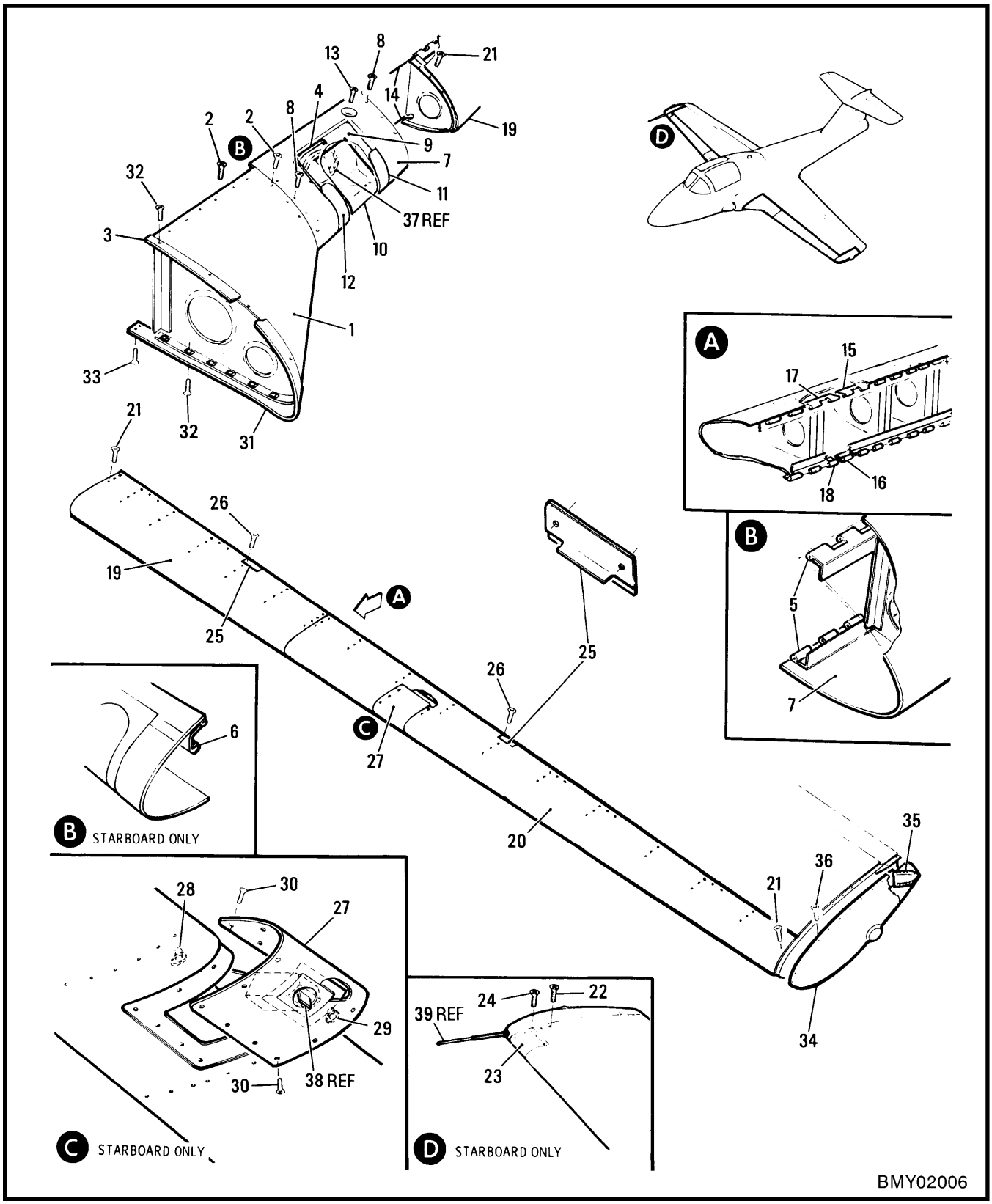

Figure 2-1-6 Droop Snoot Fairing, Wing Leading Edge & Tip

FIGURE AND INDEX NUMBER	GROUP WING			EFFEC-TIVITY	UNITS PER ASSY
	MAJOR ASSEMBLY		DROOP SNOOT FAIRING, WING LEADING EDGE & TIP		
	PART NUMBER		1 2 3 4 5 6 7 NOMENCLATURE		
2-1-6 -	41A-12100		LEADING EDGE ASSY - WING PORT (I) (SEE FIG. 2-1-1)		1
	41A-12100-803		LEADING EDGE ASSY - WING STBD (I)		1
	41A-12100-6		.LEADING EDGE ASSY - WING DROOP SNOOT PORT (I)		1
	41A-12100-7		.LEADING EDGE ASSY - WING DROOP SNOOT STBD (I)		1
- 1	41A-12100-16		..SKIN - WING DROOP SNOOT		1
	41A-12100-17		..SKIN - WING DROOP SNOOT RH		1
- 2	NAS1203-3		..BOLT		31
- 3	NAS1203-5		..BOLT		1
	41A-12100-4		.LEADING EDGE ASSY - LANDING LAMP HOUSING PORT (I)		1
	41A-12100-5		.LEADING EDGE ASSY - LANDING LAMP HOUSING STBD (I)		1
- 4	41-12010		..BASE - LANDING LAMP MOUNTING LH		1
	41-12010-1		..BASE - LANDING LAMP MOUNTING RH		1
- 5	41A-12100-174		..HALF HINGE - LANDING LA		2
- 6	S4905		..EXTRUSION - (V88308) (RUBBING STRIP)		2
- 7	41A-12100-140		..SKIN - LANDING LAMP LE LH		1
	41A-12100-141		..SKIN - LANDING LAMP LE RH		1
- 8	NAS1203-3		..BOLT - (LANDING LAMP LE RETAINING)		20
- 9	41-12011-800	*	..GLAZING ASSY - LANDING LAMP LH (FOR SPARES ORDER 41-12011-802)		1
	41-12011-802	*	..GLAZING ASSY - LANDING LAMP LH (SPARE FOR 41-12011-800)		
	41-12011-801	*	..GLAZING ASSY - LANDING LAMP RH (FOR SPARES ORDER 41-12011-803)		1
	41-12011-803	*	..GLAZING ASSY - LANDING LAMP RH (SPARE FOR 41-12011-801)		
-10	9535-21-813-8544		..SHIELD - (ANTI GLARE) (FOR SPARES ORDER 41A-12102 & -1)		1
	41A-12102		..SHIELD - LH (SPARE FOR 9535-21-813-8544)		
	41A-12102-1		..SHIELD - RH (SPARE FOR 9535-21-813-8544)		
-11	NO NUMBER	**	.STRIP - PROTECTIVE (INBD)		1
-12	NO NUMBER	**	.STRIP - PROTECTIVE (INBDD)		1
-13	NAS1203-5	*	..BOLT		8
	A3235SS020	**	.WASHER - (V78533)		4
-14	S1267-9-4775		.PIN ASSY - (V88308)		6
	41A-12100-2		.LEADING EDGE ASSY -WS 82-210 PORT(I)		1
	41A-12100-801		.LEADING EDGE ASSY -WS 82-210 STBD(I)		1
-15	41A-12100-164		..HALF HINGE - (PORT UPPER & STBD LOWER)		1
-16	41A-12100-165		..HALF HINGE - (PORT LOWER & STBD UPPER)		1
-17	41A-12100-158		..HALF HINGE - (PORT UPPER & STBD LOWER)		1
-18	41A-12100-159		..HALF HINGE - (PORT LOWER & STBD UPPER)		1
-19	41A-12100-10		..SKIN - LEADING EDGE INBOARD LH		1
	41A-12100-11		..SKIN - LEADING EDGE INBOARD RH		1
-20	41A-12100-8		..SKIN - LEADING EDGE OUTBOARD LH		1
	41A-12100-9		..SKIN - LEADING EDGE OUTBOARD RH		1
-21	NAS1203-3		..BOLT		16
	41A-12100-216		..STRIP - RUBBING (STBD WING)		1
-22	NAS1203-3		..BOLT		2
	AN960PD10L		..WASHER		2
	MS21042L3		..NUT		2
-23	41A-12100-218		..DOOR - ACCESS (PITOT-STATIC BOOM) (STBD)		1
-24	NAS1203-3		..BOLT - (STBD)		12
		*	IAW C-12-114-000/CF-473		
		**	IAW C-12-114-000/CF-329 & 473		

FIGURE AND INDEX NUMBER	GROUP WING		EFFEC-TIVITY	UNITS PER ASSY
	MAJOR ASSEMBLY	DROOP SNOOT FAIRING, WING LEADING EDGE & TIP		
	PART NUMBER	1 2 3 4 5 6 7 NOMENCLATURE		
2-1-6 -25	41A-12100-150	..STOP ASSY - HINGE		4
-26	NAS1202-3	..BOLT		8
-27	41A-12100-201	..DOOR - (LIFT TRANSDUCER STBD)		1
-28	A4A1B1-071	..RECEPTACLE - (V84256) (STBD)		1
-29	A4A1B1-100	..RECEPTACLE - (V84256) (STBD)		1
-30	NAS1203-3	..BOLT - (LIFT TRANSDUCER DOOR)		16
	41A-35098	FAIRING INSTL - FUS DROOPSNOOT PORT (SEE FIG. 1)		NP
	41A-35098-1	FAIRING INSTL - FUS DROOP SNOOT STBD		NP
-31	41A-35098-2/ST	.FAIRING ASSY - FUS DROOP SNOOT LH (I)		1
	41A-35098-3/ST	.FAIRING ASSY - FUS DROOP SNOOT RH (I)		1
-32	NAS1203-3	.BOLT		20
-33	NAS1203-4	.BOLT		2
	A3235-020-24A	.WASHER - (V78533)		22
	S1246T12-26-32	..WASHER - (V88308)		22
	41A-11000	TIP GENL ASSY - WING PORT (INTERCHANGEABLE) (SEE FIG. 2-1-1)		1
	41A-11000-1	TIP GENL ASSY - WING STBD (INTERCHANGEABLE)		1
	41A-11002	.TIP ASSY - WING PORT		1
	41A-11002-1	.TIP ASSY - WING STBD		1
-34	41A-11002-2	..TIP - WING PORT		1
	41A-11002-3	..TIP - WING STBD		1
-35	41A-11010	..RIB - WING TIP TRAILING EDGE PORT		1
	41A-11010-1	..RIB - WING TIP TRAILING EDGE STBD		1
-36	NAS560HK3-2	.SCREW		26
-37	AN3129-4523	LAMP - LANDING (SEE SECTION 12)		REF
-38	C75507	LIFT TRANSDUCER - (SEE SECTION 12)		REF
-39	AN5816-2	TUBE - PITOT STATIC (STBD) (SEE SECTION 15)		REF
		-000-		

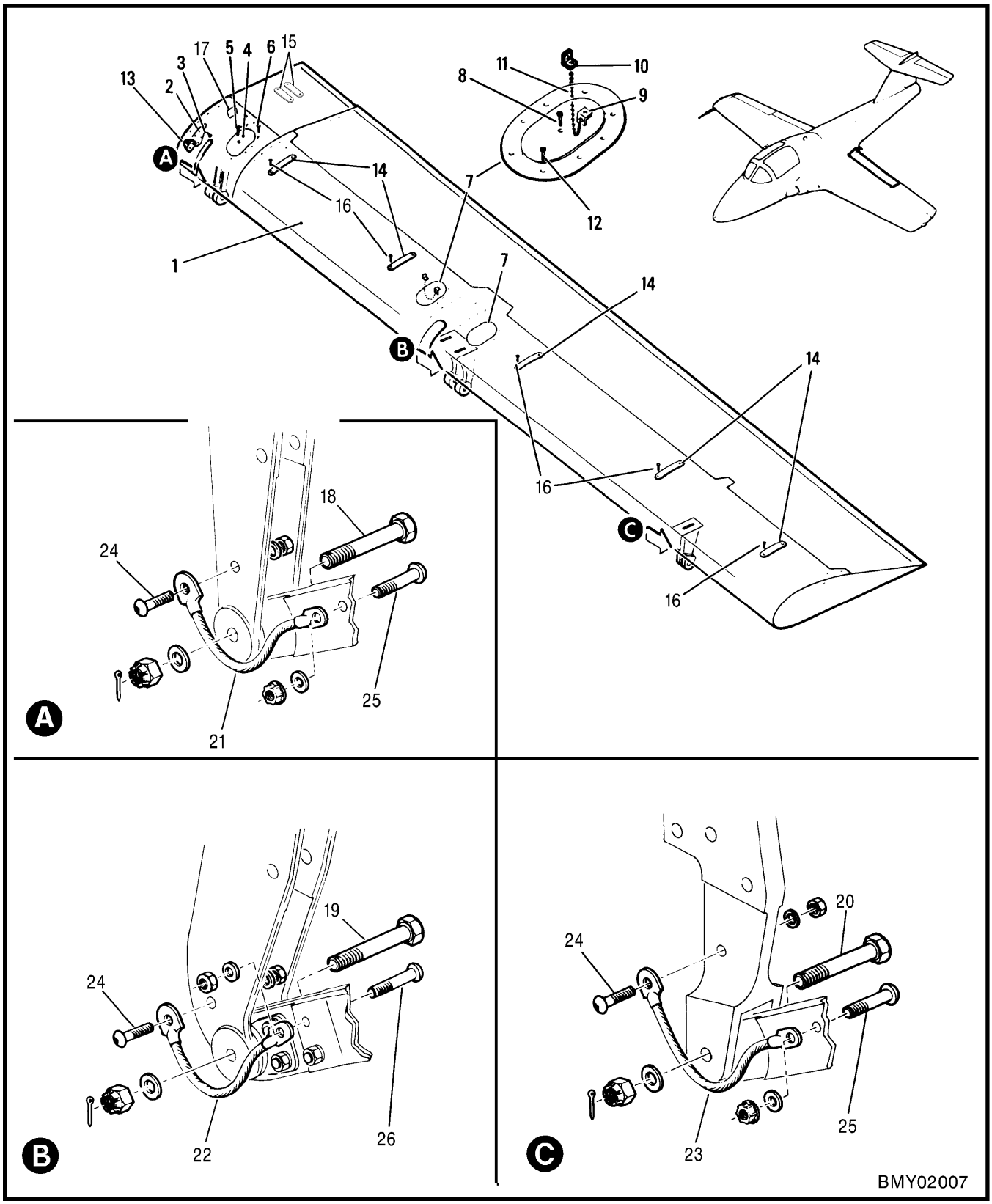

Figure 2-1-7 Wing Complete Flap

FIGURE AND INDEX NUMBER	GROUP WING MAJOR ASSEMBLY WING COMPLETE FLAP PART NUMBER	1 2 3 4 5 6 7 NOMENCLATURE	EFFEC-TIVITY	UNITS PER ASSY
2-1-7 -	41A-14000-800	FLAP GENL ASSY - WING PORT (SEE FIG. 2-1-1) (MODIFIED BY NW4528142-1)		1
	41A-14000-801	FLAP GENL ASSY - WING STBD (MODIFIED BY NW4528142-1)		1
- 1	41A-14002	.FLAP ASSY - WING PORT (INTERCHANGEABLE)		1
	41A-14002-1	.FLAP ASSY - WING STBD (INTERCHANGEABLE)		1
- 2	41A-14002-170	..DOOR - LH (INBOARD RIB INSPECTION) (I)		1
	41A-14002-171	..DOOR - RH (INBOARD RIB INSPECTION) (I)		1
- 3	NAS623-3-1	..SCREW		8
	41A-14002-12	..DOOR ASSY - (INBD HINGE INSPECTION) (I)		1
- 4	41A-14002-110	...DOOR - (INBD HINGE INS PECTION)		1
- 5	NAS1203-2	...BOLT		1
- 6	NAS1203-2	..BOLT		8
	41A-14002-10	..DOOR ASSY - (CENTRE HINGE INSPECTION) (I)		2
- 7	41A-14002-84	...DOOR - (CENTRE HINGE INSPECTION)		1
- 8	NAS1203-2	...BOLT		1
- 9	S1191	...CLIP - (V88308)		1
-10	S1191	...CLIP - (V88308)		2
-11	NAS1201B6-12	..CHAIN		2
-12	NAS1203-2	..BOLT - (INSPECTION DOOR)		16
-13	41A-14013	..BRACKET - FLAP FOLLOW UP MECHANISM (PORT)		1
-14	41A-14002-146	..STRIP - (FLAP RUBBING) (INTERCHANGEABLE) (MAKE FROM BULK MATERIAL TIVAR 1000, 0.062 IN. THICK)		5
-15	41A-14002-238	..STRIP - (FLAP RUBBING) (MAKE FROM BULK MATERIAL TIVAR 1000, 0.030 IN. THICK)		2
-16	NAS623-3-2	..SCREW		10
-17	S1043	..NAMEPLATE - (V88308) (INBOARD RIB)		1
-18	NAS6204-25D	.BOLT - (WS 30)		1
	S1236-416	.WASHER - (V88308) (SHIM)		AR
	S1236-416L	.WASHER - (V88308) (SHIM)		AR
	AN960PD416L	.WASHER		1
	AN310-4	.NUT		1
	MS24665-134	.COTTER PIN		1
-19	NAS6204-28D	.BOLT - (WS 72)		1
	AN960PD416L	.WASHER		1
	AN310-4	.NUT		1
	MS24665-134	.COTTER PIN		1
-20	NAS6204-19D	.BOLT - (WS 110)		1
	AN960PD416L	.WASHER - (SHIM)		AR
	S1236-416	.WASHER - (V88308) (SHIM)		AR
	S1236-416L	.WASHER - (V88308) (SHIM)		AR
	AN310-4	.NUT		1
	MS24665-134	.COTTER PIN		1
	NW4528142-1	JUMPER INSTL - BONDING (MODIFYING 41A-14000-800 & -801) (SEE SECTION 12)		NP
-21	M83413/8-A04AA	.JUMPER ASSY		2
-22	M83413/8-A04AC	.JUMPER ASSY		2
-23	M83413/8-A05AA	.JUMPER ASSY		2
-24	MS35206-232	.SCREW		6
-25	MS35206-234	.SCREW		4
	AN960JD6L	.WASHER		20
	AN960-6L	.WASHER		10
	MS35338-41	.NUT		10
	MS21042L06	.NUT		10
-26	NAS6204-19	.BOLT		2
	AN960JD416L	.WASHER		2
	MS35338-44	.WASHER-LOCK		2
	MS21042L4	.NUT		2
		-000-		

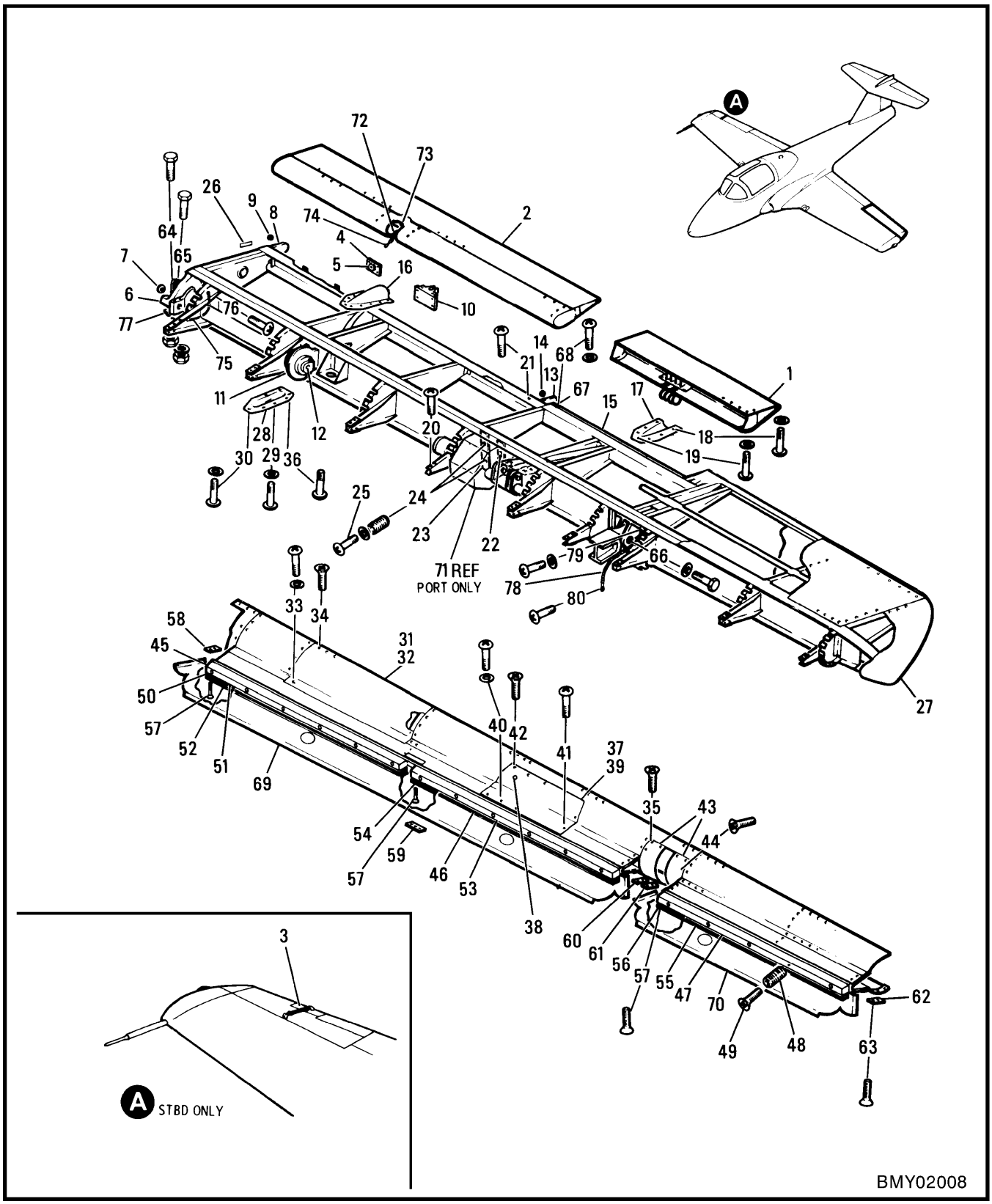

Figure 2-1-8 Wing Complete Aileron

FIGURE AND INDEX NUMBER	GROUP WING MAJOR ASSEMBLY WING COMPLETE AILERON PART NUMBER	1 2 3 4 5 6 7 NOMENCLATURE	EFFEC-TIVITY	UNITS PER ASSY
2-1-8 -	41A-13101-812	AILERON GENL ASSY - LH WING (I) (SEE FIG. 2-1-1)		1
	41A-13101-814	AILERON GENL ASSY - RH WING (I) (MODIFIED BY NW4528142-1)		1
- 1	41A-13104	.TAB ASSY - AILERON TRIM (SEE FIG. 2-1-9)		REF
- 2	41A-13103-802	.TAB ASSY - AILERON SPRING (SEE FIG. 2-1-9)		REF
- 3	41A-90707	.ROD INSTL - GEARED TAB CONTROL (STBD) (SEE SECTION 7)		REF
	41A-13101-50	.AILERON ASSY - LH		1
	41A-13101-46	.AILERON ASSY - RH		1
	41A-42103-54	..ELECTRICAL EQUIP INSTL - AILERON (SEE SECTION 12)		REF
	41A-57403	..HARNESS ASSY - P4C TO AIL TRIM TAB RELAY (SEE SECTION 12)		REF
	S1244E	..CONDUIT - (PORT) (SEE SECTION 12)		REF
	41A-90701-800	..AILERON CONTROL INSTL - (SEE SECTION 7)		REF
	41A-13102-804	..AILERON STRUCTURE ASSY - LH (I)		1
	41A-13102-802	..AILERON STRUCTURE ASSY - RH (I)		1
	41A-90734-6	...BEARING ASSY - AILERON SPRING TAB		1
- 4	41A-90734-8	....HOUSING - SPRING TAB BEARING		1
- 5	ADB4V	....BEARING - (V83086)		1
	41A-90703	...HOUSING ASSY - AILERON SPRING TAB BEARING PORT		1
	41A-90703-1	...HOUSING ASSY - AILERON SPRING TAB BEARING STBD		1
- 6	41A-90703-2	....HOUSING - SPRING TAB BEARING PORT		1
	41A-90703-3	....HOUSING - SPRING TAB BEARING STBD		1
	MS21209F1-20	....INSERT		2
	MS21209F4-15	....INSERT		1
	MS21209F4-20	....INSERT		1
- 7	MS27641-12	....BEARING		1
	41A-13121-800	...BRACKET ASSY - WS 132 AIL HINGE		1
- 8	41A-13121-8	....BRACKET - WS 132 AIL HINGE		1
- 9	MS27645-3A	....BEARING		1
-10	41A-13135	...BRACKET - WS 148		1
	41A-90728	...HOUSING ASSY - AILERON SPRING TAB BRG		1
-11	41A-90728-2	....HOUSING - AILERON SPRING TAB BEARING		1
-12	B543DD	....BEARING - (V21335)		1
	41A-13123-800	...BRACKET ASSY - WS 166 AIL HINGE		1
-13	41A-13123-8	....BRACKET - WS 166 AIL HINGE		1
-14	MS27645-3A	....BEARING		1
-15	41A-13102-250	...HALF HINGE - (AILERON TRIM & GEAR TAB)		1
-16	41A-13102-268	...FAIRING - (UPPER SPRING TAB LH)		1
	41A-13102-269	...FAIRING - (UPPER SPRING TAB RH)		1
-17	41A-13102-272	...FAIRING - (TRIM TAB LH) (I)		1
-18	NAS623-3-1	...SCREW - (LH)		4
-19	NAS623-3-2	...SCREW - (LH)		1
	AN960-10L	...WASHER - (LH)		5
-20	NAS623-3-1	...SCREW - (AILERON RIG BOARD PLUG)		2
-21	MS35207-262	...SCREW - (TAB RIG BOARD PLUG)		4
-22	41A-13102-616	...BLOCK - MOTOR (LH)		1
-23	41A-13102-254	...BLOCK - MOTOR (LH)		1
-24	3591-4CN X 3/8	...INSERT - (V26344) (ON 41A-13102-254)		2
-25	NAS623-4-8	...SCREW - (LH)		2
	AN960PD416L	...WASHER - (LH)		2
-26	S1043	...NAMEPLATE - (V88308) (INBOARD RIB)		1
-27	41A-13102-14	...TIP ASSY - AILERON (LH)		1
	41A-13102-15	...TIP ASSY - AILERON (RH)		1
-28	41A-13102-270	...FAIRING - (SPRING TAB LOWER LH) (I)		1
	41A-13102-271	...FAIRING - (SPRING TAB LOWER RH) (I)		1
-29	NAS623-3-1	...SCREW		4
-30	NAS623-3-2	...SCREW		1
	AN960-10L	...WASHER		5

FIGURE AND INDEX NUMBER	GROUP WING		EFFEC-TIVITY	UNITS PER ASSY
	MAJOR ASSEMBLY	WING COMPLETE AILERON		
	PART NUMBER	1 2 3 4 5 6 7 NOMENCLATURE		
2-1-8 -31	41A-13102-424	...COVER - (LH UPPER & RH LOWER) (I)		1
-32	41A-13102-425	...COVER - (LH LOWER & RH UPPER) (I)		1
-33	NAS623-3-3	...SCREW		16
	AN960-10L	...WASHER		16
-34	NAS1203-3	...BOLT		16
-35	NAS1203-2	...BOLT		10
-36	NAS623-3-2	...SCREW - (COVER & SPRING TAB FAIRING)		2
-37	41A-13102-434	...COVER - (NOSE BEAK UPPER LH) (I)	001-025	1
	41A-13102-598	...COVER ASSY - (NOSE BEAK UPPER LH) (I)	026-	1
-38	A6912-832-1	...PATCH PLATE - (V78533) (LH)		1
-39	41A-13102-435	...COVER - (NOSE BEAK LOWER LH) (I)		1
-40	NAS623-3-3	...SCREW	001-025	10
	NAS623-3-3	...SCREW	026-	5
	NAS1203-3	...BOLT	026-	5
	AN960-10L	...WASHER		10
-41	NAS623-3-4	...SCREW		4
-42	NAS1203-1	...BOLT		10
-43	41A-13102-436	...COVER - (OUTBOARD HINGE PORT) (I)		1
	41A-13102-437	...COVER - (OUTBOARD HINGE STBD) (I)		1
-44	NAS1203-2	...BOLT		6
-45	41A-13138-2	...WEIGHT - AILERON MASS BALANCE (LH INBD)		1
	41A-13138-3	...WEIGHT - AILERON MASS BALANCE (RH INBD)		1
-46	41A-13138-4	...WEIGHT - AILERON MASS BALANCE (LH CENTRE		1
	41A-13138-5	...WEIGHT - AILERON MASS BALANCE (RH CENTRE		1
-47	41A-13138-6	...WEIGHT - AILERON MASS BALANCE (LH OUTBD)		1
	41A-13138-7	...WEIGHT - AILERON MASS BALANCE (RH OUTBD)		1
-48	MS21209F4-20	....INSERT		17
-49	MS24694-69	...SCREW	001-025	17
	MS24694-79	...SCREW	026-	2
	NAS1203-20	...BOLT	026-	15
-50	41A-13102-456	...WEIGHT - (INBOARD ADJUSTABLE BALANCE		AR
-51	41A-13102-586	...WEIGHT - BALANCE (RIVETED)		1
-52	41A-13102-577	...RETAINER - (INBOARD SEAL LH)		1
	41A-13102-450	...RETAINER - (INBOARD SEAL RH)		1
-53	41A-13102-458	...WEIGHT - (CENTRE ADJUSTABLE BALANCE)		AR
-54	41A-13102-527	...RETAINER - (CENTRE SEAL LH)		1
	41A-13102-452	...RETAINER - (CENTRE SEAL RH)		1
-55	41A-13102-460	...WEIGHT - (OUTBOARD ADJUSTABLE BALANCE)		AR
-56	41A-13102-569	...RETAINER - (OUTBOARD SEAL LH)		1
	41A-13102-454	...RETAINER - (OUTBOARD SEAL RH)		1
-57	MS24694S50	...SCREW		20
-58	41A-13102-440	...RETAINER - (INBOARD HINGE SEAL LH)		1
	41A-13102-441	...RETAINER - (INBOARD HINGE SEAL RH)		1
-59	41A-13102-570	...RETAINER - (WS 161 SEAL)		1
-60	41A-13102-576	...RETAINER - (OUTBD HINGE INNER SEAL)		1
-61	41A-13102-580	...RETAINER - (OUTBD HINGE OUTER SEAL)		1
-62	41A-13102-578	...RETAINER - (WS 210 SEAL)		1
-63	NAS1203-3	...BOLT		9
-64	NAS6204-36	..BOLT - (AILERON STA 133)		1
-65	NAS6204-38	..BOLT - (AILERON STA 133)		1
	AN960PD416	..WASHER		1
	MS21042L4	..NUT		1
R -66	NAS6206-29D	..BOLT - (AILERON STA 189)		1
	41A-10070	..COLLAR - OUTBOARD AILERON HINGE		2
	AN960PD616	..WASHER - (1 UNDER BOLT HEAD)		2
	AN320-6	..NUT		1
	MS24665-285	..COTTER PIN		1

FIGURE AND INDEX NUMBER	GROUP WING MAJOR ASSEMBLY WING COMPLETE AILERON PART NUMBER	1 2 3 4 5 6 7 NOMENCLATURE	EFFEC-TIVITY	UNITS PER ASSY
2-1-8 -67	41A-13102-252	..STOP - HINGE PIN		1
-68	NAS623-2-1	..SCREW		2
	AN960PD8L	..WASHER		2
	MS21042L08	..NUT		2
-69	41A-13140-4	..SEAL ASSY - AILERON (INBOARD)		1
-70	41A-13140-2	..SEAL ASSY - AILERON (OUTBOARD)		1
-71	R422M22-1	ACTUATOR INSTL - AILERON TRIM TAB (SEE SECTION 7)		REF
	NW4528142-1	JUMPER INSTL - BONDING (MODIFYING 41A-13101-812 & -814) (SEE SECTION 12)		REF
-72	M83413/8-A04BC	.JUMPER ASSY		2
-73	NAS623-4-12	.SCREW		2
	AN960JD416L	.WASHER		4
	AN960-416L	.WASHER		2
	MS35338-44	.WASHER-LOCK		2
	MS21042L4	.NUT		2
-74	NAS1103-10D	.BOLT		2
	AN960JD10L	.WASHER		4
	AN960-10L	.WASHER		2
	AN320-3	.NUT		2
	MS24665-132	.COTTER PIN		2
-75	M83413/8-A05BC	.JUMPER ASSY		2
-76	MS35207-265	.SCREW		2
	AN960JD10L	.WASHER		4
	AN960-10L	.WASHER		2
	MS35338-43	.WASHER-LOCK		2
-77	NAS6204-36	.BOLT		2
	AN960JD416L	.WASHER		4
	AN960-416L	.WASHER		2
	MS35338-44	.WASHER-LOCK		2
	MS21042L4	.NUT		2
-78	M83413/8-A08BB	.JUMPER ASSY		2
-79	MS35207-265	.SCREW		2
	AN960JD10L	.WASHER		4
	AN960-10L	.WASHER		2
	MS35338-43	.WASHER-LOCK		2
-80	NAS623-3-2	.SCREW		2
	AN960JD10L	.WASHER		4
	AN960-10L	.WASHER		2
	MS35338-43	.WASHER-LOCK		2
	MS21042L3	.NUT		2
		-000-		

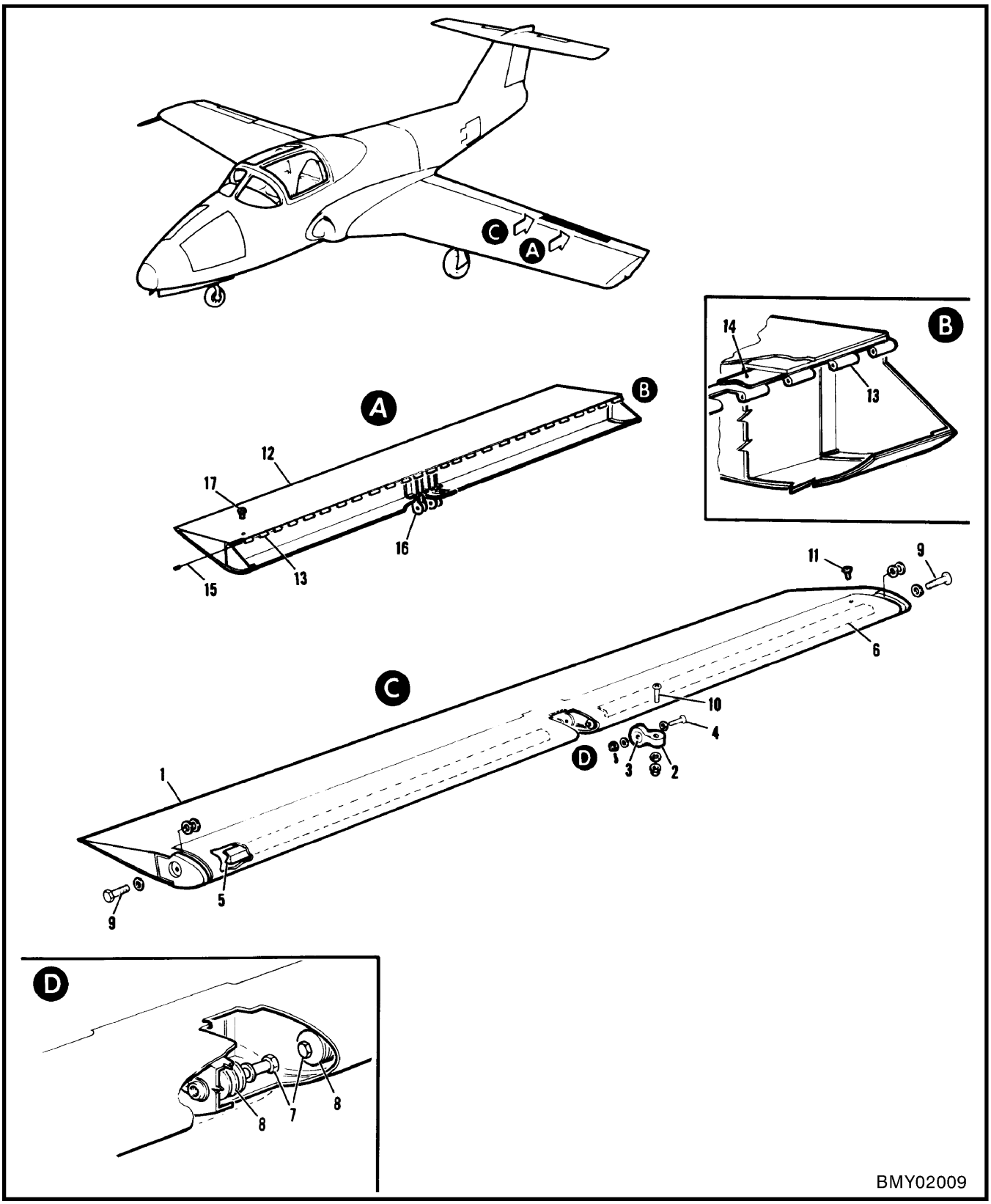

Figure 2-1-9 Aileron Spring, Trim & Geared Tabs

FIGURE AND INDEX NUMBER	GROUP WING MAJOR ASSEMBLY AILERON SPRING, TRIM & GEARED TABS PART NUMBER	1 2 3 4 5 6 7 NOMENCLATURE	EFFEC-TIVITY	UNITS PER ASSY
2-1-9 -	41A-13103-802	TAB ASSY - AILERON SPRING PORT (R) (SEE FIG. 2-1-8)		1
	41A-13103-803	TAB ASSY - AILERON SPRING STBD (R)		1
- 1	41A-13103-70	.TAB STRUCTURE ASSY - AILERON SPRING PORT (BONDED PORTION)		1
	41A-13103-71	.TAB STRUCTURE ASSY - AILERON SPRING STBD (BONDED PORTION)		1
	41A-13134	.HOUSING ASSY - AILERON SPRING TAB BEARING		1
- 2	41A-13134-2	..HOUSING - AILERON SPRING TAB BEARING		1
- 3	MS27645-3	..BEARING		1
- 4	NAS1103-11D	.BOLT		1
	AN960PD10	.WASHER		2
	AN320-3	.NUT		1
	MS24665-132	.COTTER PIN		1
- 5	41A-13103-80	.WEIGHT - (INBOARD MASS BALANCE)		1
- 6	41A-13103-78	.WEIGHT - (OUTBOARD MASS BALANCE)		1
- 7	NAS428-4-16	.BOLT		2
- 8	S1246B16-18-125	.WASHER - (V88308)		AR
	AN960PD416	.WASHER - (ADJUSTABLE BALANCE)		2
- 9	AN173H11A	.BOLT - (TAB RETAINING OUTER HINGE)		2
	AN960PD10L	.WASHER		2
	AN960PD10	.WASHER		4
-10	NAS623-4-12	.SCREW - (TAB RETAINING CENTRE HINGE)		1
	AN960PD416	.WASHER		1
	MS21042L4	.NUT		1
-11	MS35207-261	.SCREW - (RIG BOARD PLUG)		1
	41A-13104	TAB ASSY - AILERON TRIM PORT (INTERCHANGEABLE) (SEE FIG. 2-1-8)		1
	41A-13104-2	TAB ASSY - AILERON GEAR STBD (INTERCHANGEABLE)	001-120	1
	41A-13104-800	TAB ASSY - AILERON GEAR STBD (INTERCHANGEABLE)	121-	1
-12	41A-13104-4	.TAB STRUCTURE ASSY - AILERON TRIM PORT (BONDED PORTION)		1
	41A-13104-6	.TAB STRUCTURE ASSY - AILERON GEAR STBD (BONDED PORTION)	001-120	1
	41A-13104-46	.TAB STRUCTURE ASSY - AILERON GEAR STBD (BONDED PORTION)	121-	1
-13	41A-13104-22	.HALF HINGE - (TRIM TAB PORT)		1
	41A-13104-24	.HALF HINGE - (GEAR TAB STBD)		1
-14	41A-13104-26	.SHIM - (HALF HINGE PORT)		AR
	41A-13104-28	.SHIM - (HALF HINGE STBD)		AR
-15	S1267-9-1790	.PIN ASSY - (V88308)		1
-16	41A-13132	.BRACKET - AILERON TRIM TAB LEVER PORT		1
	41A-13131	.BRACKET - AILERON TRIM TAB LEVER STBD		1
-17	MS35207-262	.SCREW - (RIG BOARD PLUG)		1

-000-

SECTION 2

EMPENNAGE

TABLE OF CONTENTS

Figure	Title	Page
2-2-1	Complete Empennage	2-2-2
2-2-2	Vertcal Stabilizer & Rudder	2-2-4
2-2-3	Horizontal Stabilizer & Elevator	2-2-8
2-2-4	Elev Balance Weights, Tabs & Empennage Fairings	2-2-12

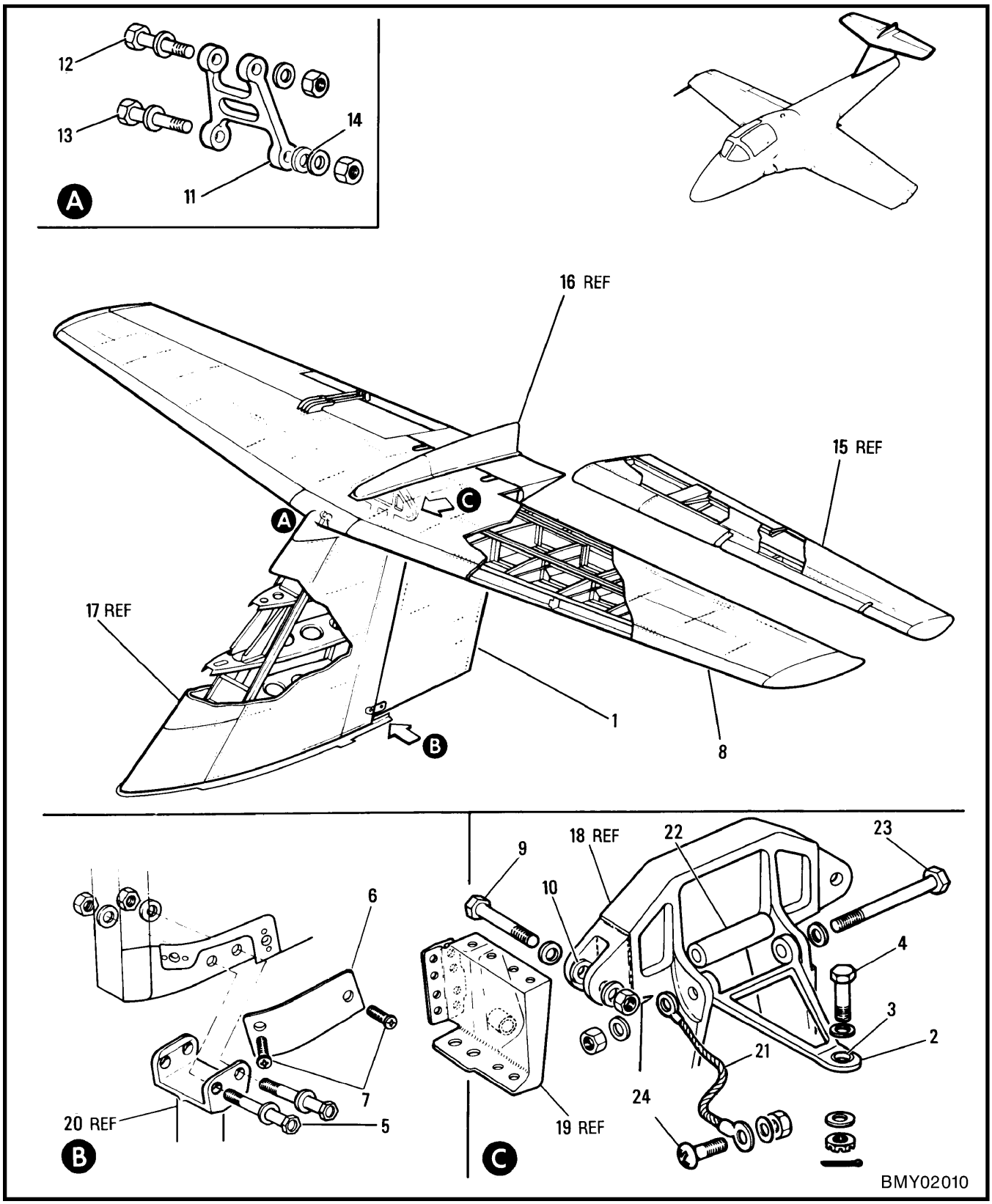

Figure 2-2-1 Complete Empennage

FIGURE AND INDEX NUMBER	GROUP EMPENNAGE MAJOR ASSEMBLY COMPLETE EMPENNAGE PART NUMBER		1 2 3 4 5 6 7 NOMENCLATURE	EFFEC-TIVITY	UNITS PER ASSY
2-2-1 -	41A-20000		EMPENNAGE GENL ASSY - COMPLETE (SEE FIG. 1)		NP
- 1	41A-22000		.RUDDER ASSY - COMPLETE (SEE FIG. 2-2-2)		REF
	41A-22021		.BRACKET ASSY - RUDDER HINGE MOUNTING		1
			OR		
	41A-22021-952		.BRACKET ASSY - RUDDER HINGE MOUNTING		
- 2	41A-22021-2		..BRACKET - RUDDER HINGE MOUNTING		1
			OR		
	41A-22021-950		..BRACKET - RUDDER HINGE MOUNTING		
- 3	MS27645-4		..BEARING		1
- 4	NAS6204-13D		.BOLT		1
	AN960D416		.WASHER		2
	AN320-4		.NUT		1
	MS24665-134		.COTTER PIN		1
- 5	NAS6204-50		.BOLT		2
	AN960D416		.WASHER		4
	MS21042L4		.NUT		2
- 6	41A-22000-85		.PLATE - COVER LH (INTERCHANGEABLE)		1
	41A-22000-86		.PLATE - COVER RH (INTERCHANGEABLE)		1
- 7	MS24693-272		.SCREW		4
- 8	41A-23000-802		.STABILIZER ASSY - HORIZONTAL (SEE FIG. 2-2-3)		REF
			OR		
	41A-23000-802/B	*	.STABILIZER ASSY - HORIZONTAL (SEE FIG. 2-2-3)		
- 9	NAS1106-24		.BOLT		2
	AN960D616		.WASHER		4
-10	S1246LC25-20-20		.SHIM - (V88308)		2
	MS21042L6		.NUT		2
-11	41A-21014		.LINK - HOR/STAB FORWARD ATTACHMENT		1
-12	NAS1106-28		.BOLT - (LINK UPPER)		1
-13	NAS1106-46		.BOLT - (LINK LOWER)		1
	AN960D616		.WASHER		4
-14	S1246LC25-20-20		.SHIM - (V88308)		1
	MS21042L6		.NUT		2
-15	41A-24001		.ELEVATOR INSTL - COMPLETE (SEE FIG. 2-2-3)		REF
-16	41A-20004		.FAIRING INSTL - EMPENNAGE (SEE FIG. 2-2-4)		REF
-17	41A-21000		STABILIZER ASSY - VERTICAL (SEE FIG. 2-2-2)		REF
-18	41A-21023		FITTING ASSY - HOR/STAB ATT REAR		REF
			(SEE FIG. 2-2-2)		
-19	41A-23022		BRACKET ASSY - HOR/STAB ATT (SEE FIG. 2-2-3)		REF
-20	41A-36046-2		SHAFT - RUDDER HINGE (SEE SECTION 7)		REF
	NW4528142-1		JUMPER INSTL - BONDING (MODIFYING 41A-20000)		NP
			(SEE SECTION 12)		
-21	M83413/8-A07BC		.JUMPER ASSY		1
-22	NAS43DD4-256		.SPACER		1
-23	NAS6204-84		.BOLT		1
	AN960JD416		.WASHER		3
	MS21042L4		.NUT		1
-24	MS35207-265		.SCREW		1
	AN960JD10L		.WASHER		2
	AN960-10L		.WASHER		1
	MS35338-43		.WASHER-LOCK		1
	MS21042L3		.NUT		1
			-000-		
		*	AS DIRECTED BY NDHQ ASIP PROGRAM		

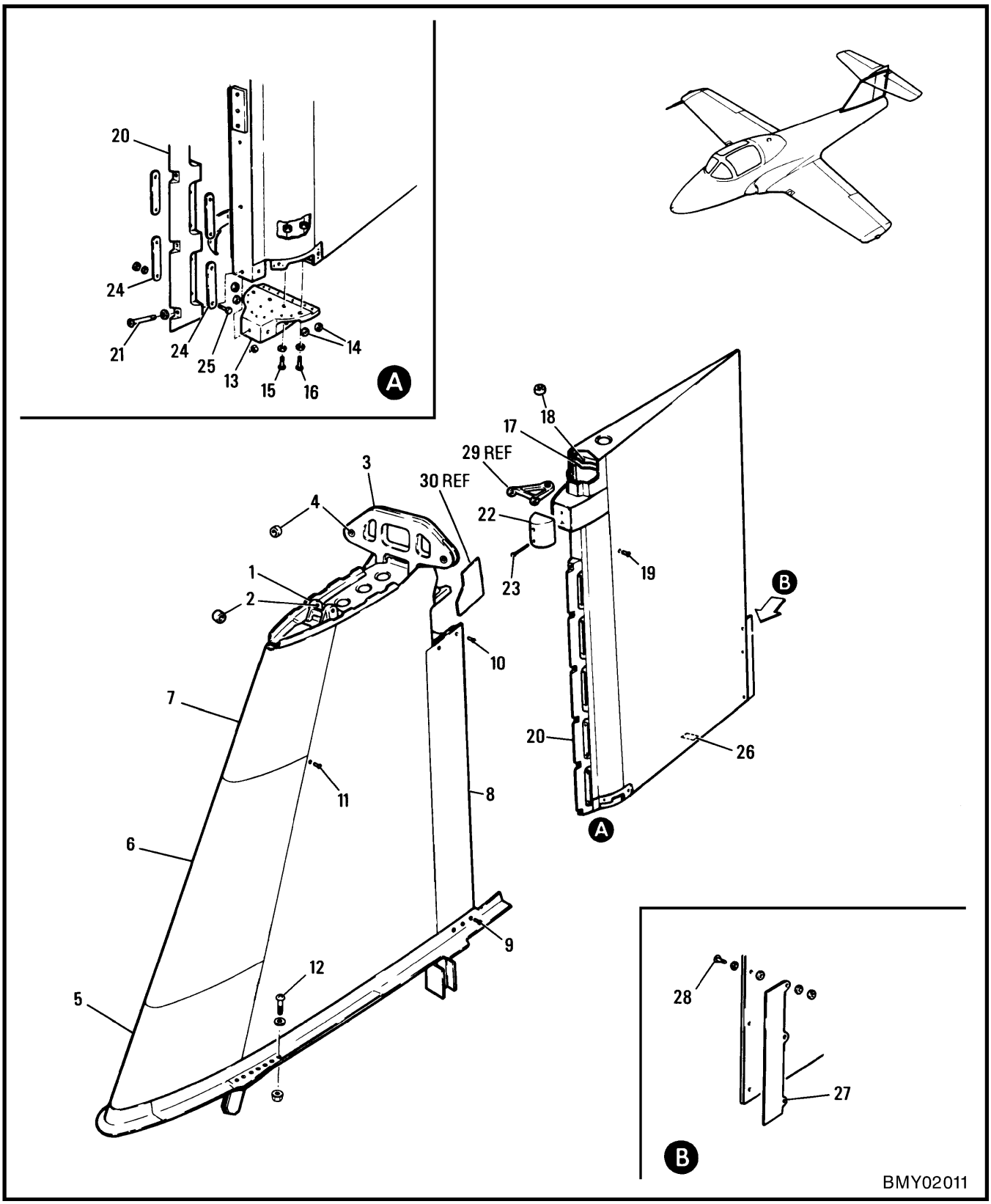

Figure 2-2-2 Vertical Stabilizer & Rudder

FIGURE AND INDEX NUMBER	GROUP EMPENNAGE MAJOR ASSEMBLY VERTICAL STABILIZER & RUDDER PART NUMBER	1 2 3 4 5 6 7 NOMENCLATURE	EFFEC-TIVITY	UNITS PER ASSY
2-2-2 -	41A-21000	STABILIZER ASSY - VERTICAL (SEE SECTION 3)		1
	41A-21021	.BRACKET ASSY - HOR/STAB ATTACHMENT FORWARD		1
- 1	41A-21021-2	..BRACKET - HOR/STAB ATTACHMENT FORWARD		1
- 2	NAS75-6-011	..BUSHING		2
	41A-21001-4	.SPAR ASSY - VERTICAL STABILIZER REAR		1
	41A-21023	..FITTING ASSY - HOR/STAB ATTACHMENT REAR		1
- 3	41A-21023-4	...FITTING - HOR/STAB ATTACHMENT REAR (IAW C-12-114-000/CF-410)		1
- 4	NAS75-6-008	...BUSHING		4
- 5	41A-21000-2	.SKIN - VERTICAL STABILIZER LE LOWER		1
	MS20426AB4	.RIVET		28
	MS20426AB5	.RIVET		14
	MS20401AD5	.RIVET		20
- 6	41A-21000-4	.SKIN - VERTICAL STABILIZER LE CENTRE		1
	NAS1203-4	.SCREW - CSK		38
- 7	41A-21000-6	.SKIN - VERTICAL STABILIZER LE UPPER		1
	MS20426AB4	.RIVET		16
	CCFM200-4	.BOLT - JO		14
	CCFM200-3	.BOLT - JO		12
	FF164426-2	.BOLT - JO		12
- 8	41A-21000-10	.SHROUD ASSY - TRAILING EDGE LH		1
	41A-21000-11	.SHROUD ASSY - TRAILING EDGE RH		1
- 9	MS24693-274	.SCREW		6
-10	MS24693-273	.SCREW		4
-11	MS27039-1-12	.SCREW - (RIG BOARD PLUG)		1
-12	NAS623-3-7	.SCREW		14
	AN960PD10	.WASHER		14
	MS21042L3	.NUT		14
	41A-22000-800	RUDDER ASSY - COMPLETE (I) (SEE FIG. 2-2-1) OR		1
	41A-22000-804	RUDDER ASSY - COMPLETE (SEE FIG. 2-2-1)		
	41A-22022	.FITTING ASSY - RUDDER HINGE LOWER		1
-13	41A-22022-2	..FITTING - RUDDER HINGE LOWER OR		1
	41A-22022-950	..FITTING - RUDDER HINGE LOWER		
-14	NAS75-4-008	..BUSHING		4
-15	NAS623-3-12	.SCREW		2
-16	NAS623-3-9	.SCREW		2
	AN960D10L	.WASHER		4
	MS21042L3	.NUT		4
	41-22013-6	.BRACKET ASSY - RUDDER HINGE UPPER OR		1
	41-22013-952	.BRACKET ASSY - RUDDER HINGE UPPER		
-17	41-22013-8	..BRACKET - RUDDER HINGE UPPER OR		1
	41-22013-950	..BRACKET - RUDDER HINGE UPPER		
-18	NAS75-4-005	..BUSHING		2
-19	MS35207-261	.SCREW - (RIG BOARD PLUG)		1
-20	41A-22026	.WEIGHT - RUDDER BALANCE		1
-21	NAS623-4-26	.SCREW		6
	AN960PD416	.WASHER		6
	MS21042L4	.NUT		1
-22	41A-22029	.WEIGHT - RUDDER BALANCE		1
-23	NAS517-4-27	.SCREW		2
-24	41A-22030	.WEIGHT - RUDDER BALANCE ADJ		AR
-25	NAS1103-14	.BOLT		4
	AN960PD10L	.WASHER		4
	MS21042L3	.NUT		4
-26	S1043	.NAMEPLATE - (V88308)		1
-27	41A-22000-145	.TAB - RUDDER TRIM		1
-28	NAS623-2-6	.SCREW		3
	41A-22031	.WASHER - TAPERED		3
	AN960PD8L	.WASHER		6
	MS21042L08	.NUT		3

FIGURE AND INDEX NUMBER	GROUP EMPENNAGE MAJOR ASSEMBLY VERTICAL STABILIZER & RUDDER PART NUMBER	1 2 3 4 5 6 7 NOMENCLATURE	EFFEC-TIVITY	UNITS PER ASSY
2-2-2 -				
-29	41A-22021	BRACKET ASSY - RUDDER HINGE MOUNTING (SEE FIG. 2-2-1)		REF
-30	41A-20004-13	PANEL ASSY - (VERTICAL STABILIZER UPPER REAR ACCESS LH) (SEE FIG. 2-2-4)		REF
		-000-		

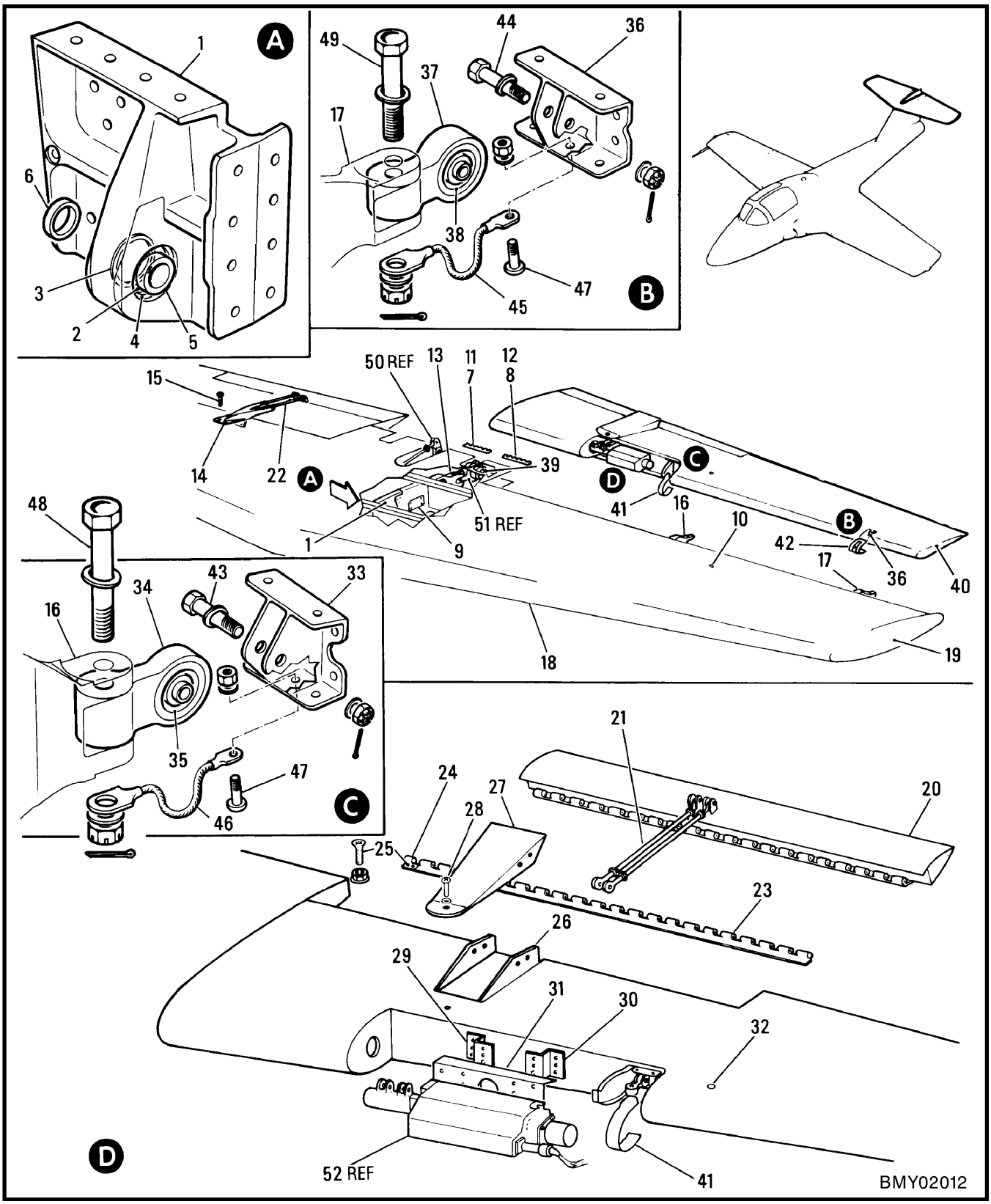

Figure 2-2-3 Horizontal Stabilizer & Elevator

FIGURE AND INDEX NUMBER	GROUP EMPENNAGE MAJOR ASSEMBLY HORIZONTAL STABILIZER & ELEVATOR PART NUMBER	1 2 3 4 5 6 7 NOMENCLATURE	EFFEC-TIVITY	UNITS PER ASSY
2-2-3	41A-23000-802	STABILIZER ASSY - HORIZONTAL (I) (SEE FIG. 2-2-1)		1
		OR		
	41A-23000-802/B *	STABILIZER ASSY - HORIZONTAL (I) (SEE FIG. 2-2-1)		
	41A-42127	.TRANSPORT BREAK INSTL - HORIZONTAL STABILIZER (ELEC) (SEE SECTION 12)		REF
	41A-23000-2	.PANEL ASSY - HORIZONTAL STABILIZER UPPER		1
	41A-23022	..BRACKET ASSY - HOR/STAB ATTACHMENT PORT		1
	41A-23022-1	..BRACKET ASSY - HOR/STAB ATTACHMENT STBD		1
- 1	41A-23022-2	...BRACKET - HOR/STAB ATTACHMENT PORT		1
	41A-23022-3	...BRACKET - HOR/STAB ATTACHMENT STBD		1
- 2	KSB8SXD1	...BEARING - (V97613)		1
- 3	41A-23022-12	...SHIM - HOR/STAB ATT BRACKET BEARING		1
- 4	NAS669-100	...RING		1
- 5	41A-23014	...BUSHING - MAIN ATTACHMENT BRACKET		1
- 6	41A-23019	...COLLAR - MAIN ATTACHMENT BRACKET		1
- 7	41A-23028-30	..HALF HINGE - (PORT INNER UPPER)		1
	41A-23028-31	..HALF HINGE - (STBD INNER UPPER)		1
- 8	41A-23028-40	..HALF HINGE - (PORT OUTER UPPER)		1
	41A-23028-41	..HALF HINGE - (STBD OUTER UPPER)		1
- 9	S1043	..NAMEPLATE - (V88308)		1
-10	AN565F428H4	..SETSCREW - (RIG BOARD PLUG)		2
	41A-23000-804	.PANEL ASSY - HORIZONTAL STABILIZER LOWER		1
-11	41A-23028-31	..HALF HINGE - (PORT INNER LOWER)		1
	41A-23028-30	..HALF HINGE - (STBD INNER LOWER)		1
-12	41A-23028-41	..HALF HINGE - (PORT OUTER LOWER)		1
	41A-23028-40	..HALF HINGE - (STBD OUTER LOWER)		1
-13	41A-23021-2	.BRACKET - HORIZONTAL STABILIZER STA 7 INBOARD HINGE (RIVETED)		2
	41A-23028-32	.SHIM - LAMINATED		4
-14	41A-23027	.BRACKET - HORIZONTAL STABILIZER GEAR TAB ANCHOR (STBD)		1
-15	MS24694-51	.SCREW		4
-16	41A-23026	.BRACKET - HORIZONTAL STABILIZER STA 42 HINGE (RIVETED)		2
-17	41A-23023	.BRACKET - HORIZONTAL STABILIZER STA 69 HINGE (RIVETED)		2
-18	41A-23033	.LEADING EDGE ASSY - HORIZONTAL STABILIZER		2
-19	41A-23034	.TIP ASSY - HORIZONTAL STABILIZER (WELDED)		2
	41A-24001	ELEVATOR INSTL - COMPLETE (MODIFIED BY NW4528142-1) (SEE FIG. 2-2-1)		NP
	41A-24005-802	.ELEVATOR ASSY - PORT (I)		1
	41A-24005-801	.ELEVATOR ASSY - STBD (I)		1
-20	41A-24002	..TAB ASSY - ELEVATOR (SEE FIG. 2-2-4)		REF
-21	41A-90603	..TAB CONTROL INSTL - ELEVATOR TRIM (SEE SECTION 7)		REF
-22	41A-90608	..TAB CONTROL INSTL - ELEVATOR GEARED (SEE SECTION 7)		REF
	41A-42102	..ELECTRICAL EQUIP. INSTL- REAR FUS (SEE SECTION 12)		REF
	41A-24000-800	..ELEVATOR STRUCTURE ASSY - PORT		1
	41A-24000-801	..ELEVATOR STRUCTURE ASSY - STBD		1
	41A-24028	...TORQUE TUBE ASSY - ELEVATOR (SEE SECTION 7)		REF
-23	41A-24000-118	...HALF HINGE - ELEVATOR TRIM TAB PORT		1
	41A-24000-119	...HALF HINGE - ELEVATOR TRIM TAB STBD		1
-24	41A-24000-236	...STOP - HINGE PIN PORT		1
	41A-24000-237	...STOP - HINGE PIN STBD		1
-25	MS24693CB47	...SCREW		2
	MS21042L08	...NUT		2
-26	41A-24000-300	...TRAY - (TRIM TAB CONTROL ROD PORT)		1
-27	41A-24000-302	...COVER - (TRIM TAB CONTROL ROD PORT)		1
-28	NAS623-3-1	...SCREW - (PORT)		1
	AN960PD10L	...WASHER - (PORT)		1
	*	AS DIRECTED BY NDHQ ASIP PROGRAM		

FIGURE AND INDEX NUMBER	GROUP EMPENNAGE MAJOR ASSEMBLY HORIZONTAL STABILIZER & ELEVATOR PART NUMBER	1 2 3 4 5 6 7 NOMENCLATURE	EFFEC-TIVITY	UNITS PER ASSY
2-2-3 -29	41A-24000-142	...MOUNTING - (ACTUATOR SUPPORT BRACKET PORT INBOARD)		1
-30	41A-24000-144	...MOUNTING - (ACTUATOR SUPPORT BRACKET PORT OUTBOARD)		1
	41A-24000-314	...SHIM - LAMINATED (INBD)		AR
	41A-24000-316	...SHIM - LAMINATED (OUTBD)		AR
-31	41A-24023	...BRACKET ASSY - ACTUATOR SUPPORT (PORT)		1
-32	MS35207-261	...SCREW - (RIG BOARD PLUG PORT)		3
	MS35207-261	...SCREW - (RIG BOARD PLUG STBD)		2
-33	41A-24029	...BRACKET - ELEVATOR STA 42 HINGE PORT		1
	41A-24029-2	...BRACKET - ELEVATOR STA 42 HINGE STBD		1
	41A-24031	...BEARING ASSY - ELEVATOR STA 42 HINGE (I)		1
-34	41A-24031-2	....HOUSING - ELEVATOR HINGE BEARING		1
-35	MS27645-5	....BEARING		1
-36	41A-24030	...BRACKET - ELEVATOR STA69 HINGE		1
	41A-24032	...BEARING ASSY - ELEVATOR STA 69 HINGE (I)		1
-37	41A-24032-2	....HOUSING - ELEVATOR HINGE BEARING		1
-38	MS27645-4	....BEARING		1
-39	S1043M	...NAMEPLATE - (V88308)		1
-40	41A-24000-4	...TIP ASSY - ELEVATOR		1
-41	41A-24000-96	...COVER - ELEVATOR STA 42 HINGE PORT		1
	41A-24000-98	...COVER - ELEVATOR STA 42 HINGE STBD		1
-42	41A-24000-94	...COVER - ELEVATOR STA 69 HINGE PORT		1
	41A-24000-95	...COVER - ELEVATOR STA 69 HINGE STBD		1
-43	NAS1105-12D	.BOLT - (ELEVATOR STA 42 HINGE)		2
	AN960PD516	.WASHER - (UNDER BOLT HEAD)		2
	AN960PD516L	.WASHER		2
	AN320-5	.NUT		2
	MS24665-134	.COTTER PIN		2
-44	NAS6204-11D	.BOLT - (ELEVATOR STA 69 HINGE)		2
	AN960PD416L	.WASHER - (UNDER BOLT HEAD)		2
	AN960PD416	.WASHER		2
	AN320-4	.NUT		2
	MS24665-134	.COTTER PIN		2
	NW4528142-1	JUMPER INSTL - BONDING (MODIFYING 41A-24001) (SEE SECTION 12)		REF
-45	M83413/8-A04BC	.JUMPER ASSY		1
-46	M83413/8-A04BD	.JUMPER ASSY		1
-47	MS35207-265	.SCREW		2
	AN960JD10L	.WASHER		2
	AN960-10L	.WASHER		2
	MS35338-43	.WASHER-LOCK		2
	MS21042L3	.NUT		2
-48	NAS1105-27D	.BOLT		1
	AN960JD516L	.WASHER		1
	AN960JD516	.WASHER		1
	AN320-5	.NUT		1
	MS24665-134	.COTTER PIN		1
-49	NAS6204-23D	.BOLT		1
	AN960JD416L	.WASHER		1
	AN960JD416	.WASHER		1
	AN320-4	.NUT		1
	MS24665-134	.COTTER PIN		1
-50	41A-90555	LEVER - ELEVATOR CONTROL (SEE SECTION 7)		REF
-51	41-24022	BEARING ASSY - ELEVATOR INBOARD HINGE (SEE SECTION 7)		REF
-52	R422M25-1	ACTUATOR ASSY - ELEVATOR TRIM TAB (SEE SECTION 7)		REF
		-000-		

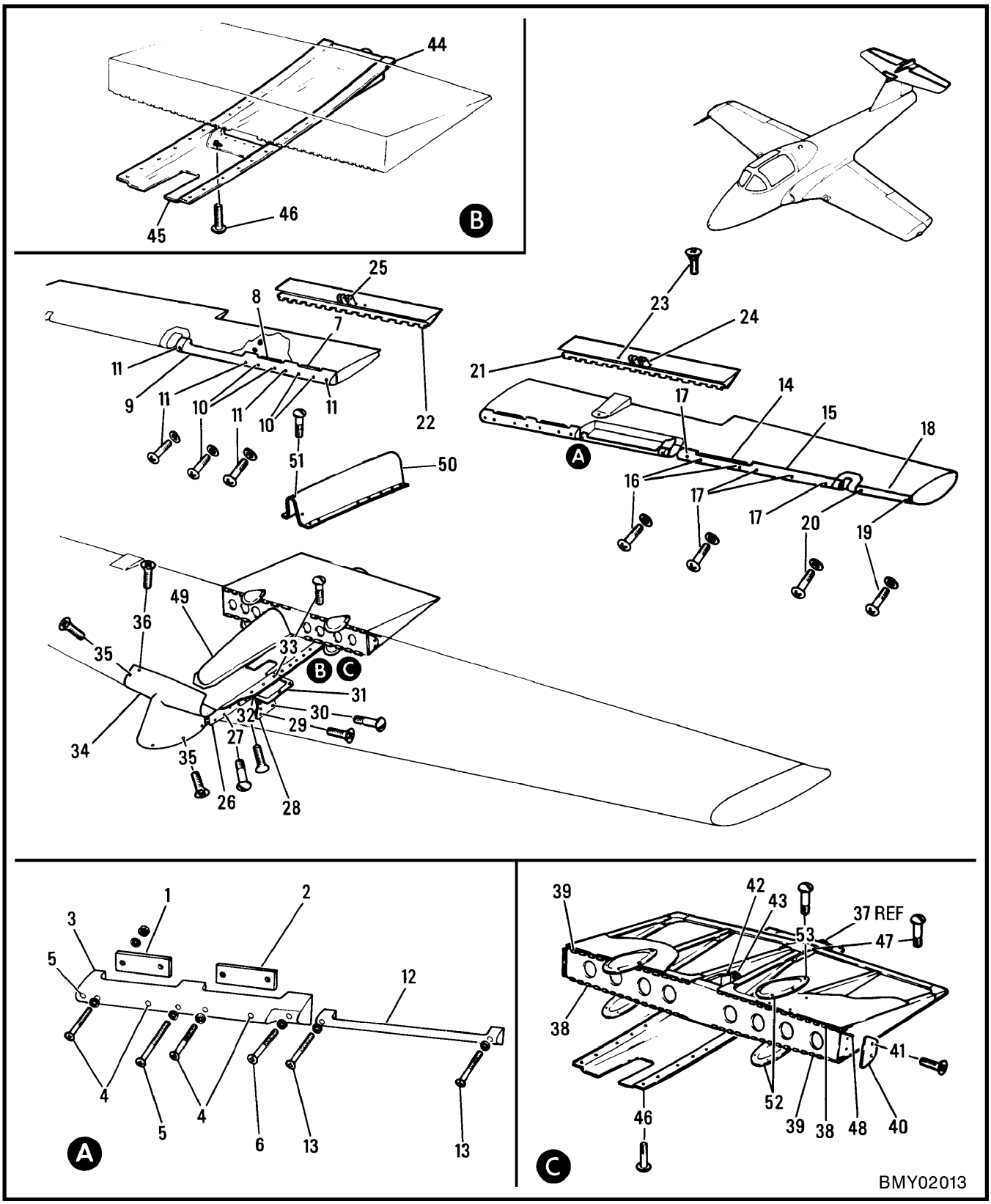

Figure 2-2-4 Elev Balance Weights, Tabs & Empennage Fairings

FIGURE AND INDEX NUMBER	GROUP EMPENNAGE MAJOR ASSEMBLY ELEV BALANCE WEIGHTS, TABS & EMPENNAGE FAIRINGS PART NUMBER	1 2 3 4 5 6 7 NOMENCLATURE	EFFEC-TIVITY	UNITS PER ASSY
2-2-4	41A-24000	ELEVATOR STRUCTURE ASSY - (SEE FIG. 2-2-3)		REF
	41A-24000-284	.LEADING EDGE ASSY - ELEVATOR STA 13-27 (PORT)		1
- 1	41A-24040-22	..WEIGHT - BALANCE		AR
- 2	41A-24040-24	..WEIGHT - BALANCE		AR
- 3	41A-24040-16	..WEIGHT - BALANCE		1
- 4	NAS623-3-15	..SCREW		4
	S1246AB13-12-16	..WASHER - (V88308) (UNDER BOLT HEAD)		4
	AN960PD10	..WASHER		AR
	MS21042L3	..NUT		4
- 5	NAS623-3-17	..SCREW		2
- 6	NAS623-3-19	..SCREW		1
	S1246AB13-12-16	..WASHER - (V88308)		3
	41A-24000-283	.LEADING EDGE ASSY - ELEVATOR STA 13-41 (STBD)		1
- 7	41A-24040-26	..WEIGHT - BALANCE		AR
- 8	41A-24040-28	..WEIGHT - BALANCE		AR
- 9	41A-24040-20	..WEIGHT - BALANCE		1
-10	NAS623-3-15	..SCREW		4
	S1246AB13-12-16	..WASHER - (V88308)		4
	AN960PD10	..WASHER		AR
	MS21042L3	..NUT		4
-11	NAS623-3-17	..SCREW		4
	S1246AB13-12-16	..WASHER - (V88308)		4
	41A-24000-318	.COVER ASSY - ELEVATOR STA 27-41 ACTUATOR (PORT) (R)		1
-12	41-24027-2	..WEIGHT - ELEVATOR BALANCE		1
-13	NAS623-3-6	..SCREW		2
	S1246AB13-12-16	..WASHER - (V88308)		2
	41A-24000-282	.LEADING EDGE ASSY - ELEVATOR STA 42-69		1
-14	41A-24040-30	..WEIGHT - BALANCE		AR
-15	41A-24040-18	..WEIGHT - BALANCE		1
-16	NAS623-3-15	..SCREW		2
-17	NAS623-3-17	..SCREW		4
	S1246AB13-12-16	..WASHER - (V88308)		6
	41A-24000-148	.LEADIN EDGE ASSY - ELEVATOR STA 70-78		1
-18	41A-24040-8	..WEIGHT - BALANCE		1
-19	NAS623-3-16	..SCREW		1
-20	NAS623-3-17	..SCREW		1
	S1246AB13-12-16	..WASHER - (V88308)		2
	41A-24002	TAB ASSY - ELEVATOR PORT (TRIM) (I) (SEE FIG. 2-2-3)		1
	41A-24002-1	TAB ASSY - ELEVATOR STBD (GEARED) (I)		1
-21	41A-24002-14	.HALF HINGE - ELEVATOR TAB PORT		1
-22	41A-24002-15	.HALF HINGE - ELEVATOR TAB STBD		1
-23	MS35207-260	.SCREW - (RIG BOARD PLUG)		1
-24	41A-24037	.FITTING - ELEVATOR STA 28 TRIM TAB ACTUATION (PORT)		1
-25	41A-24038	.FITTING - ELEVATOR STA 28 GEARED TAB ACTUATION (STBD)		1
	41A-20004	FAIRING INSTL - EMPENNAGE (SEE FIG. 2-2-1)		NP
-26	41A-20004-28	.FAIRING - (HORIZONTAL STABILIZER FORWARD LOWER LH)		1
	41A-20004-27	.FAIRING - (HORIZONTAL STABILIZER FORWARD LOWER RH)		1
-27	MS27039-1-07	.BOLT		8
	41A-20004-13	.PANEL ASSY - (VERTICAL STABILIZER UPPER REAR ACCESS LH) (I)		1
	41A-20004-14	.PANEL ASSY - (VERTICAL STABILIZER UPPER REAR ACCESS RH) (I)		1
-28	41A-20004-82	..PANEL - (VERT/STAB ACCESS LH)		1
	41A-20004-83	..PANEL - (VERT/STAB ACCESS RH)		1
-29	NAS1203-2	.BOLT		8
-30	MS27039-1-07	.SCREW		4

FIGURE AND INDEX NUMBER	GROUP	EMPENNAGE	EFFEC-TIVITY	UNITS PER ASSY
	MAJOR ASSEMBLY	ELEV BALANCE WEIGHTS, TABS & EMPENNAGE FAIRINGS		
	PART NUMBER	1 2 3 4 5 6 7 NOMENCLATURE		
2-2-4 -	41A-20004-809	.PANEL ASSY - (HORIZONTAL STABILIZER LOWER ACCESS PORT) (I)		1
	41A-20004-808	.PANEL ASSY - (HORIZONTAL STABILIZER LOWER ACCESS STBD) (I)		1
-31	41A-20004-113	..PANEL ASSY - (HOR/STAB LOWER ACCESS LH)		1
	41A-20004-112	..PANEL ASSY - (HOR/STAB LOWER ACCESS RH)		1
-32	NAS1203-2	.BOLT		12
-33	MS27039-1-06	.SCREW		6
-34	41A-20004-6	.FAIRING - (HORIZ & VERT/STAB NOSE) (I)		1
-35	MS24693-271	.SCREW		12
-36	NAS1203-4	.BOLT		14
	A3235-020-24A	.WASHER - (V78533)		26
	41A-20004-806	.FAIRING ASSY - (HORIZ STABILIZER AFT) (I)		1
-37	41A-42102-4	..ELECTRICAL EQUIP INSTL - EMPENNAGE (SEE SECTION 12)		REF
	41A-20004-804	..FAIRING ASSY - (HORIZ STABILIZER AFT) (I)		1
	41A-20005-800	...FAIRING ASSY - (HOR/STAB TRAILING EDGE)		1
-38	41A-20005-10	....HALF HINGE - (PORT UPPER & STBD LOWER)		2
-39	41A-20005-12	....HALF HINGE - (PORT LOWER & STBD UPPER)		2
-40	41A-20005-30	....LOCKPLATE - HINGE		2
-41	MS24693-270	....SCREW		4
-42	41A-20005-46	....BRACKET - ELEVATOR DOWN SPRING LH		1
	41A-20005-47	....BRACKET - ELEVATOR DOWN SPRING RH		1
	41A-20005-48	....PACKING - ELEVATOR DOWN SPRING BRACKET		1
-43	41A-20005-50	....BEARING - (MADE FROM FF207-2 (V70417)		2
-44	41A-20004-66	...FAIRING ASSY - (HOR/STAB REAR LOWER)		1
	41A-20004-62	....FAIRING		1
	41A-20004-64	....BUTTSTRAP		1
-45	41A-20004-60	.FAIRING - (HORIZONTAL STAB AFT LOWER)		1
-46	MS27039-1-07	.SCREW		14
-47	MS27039-1-09	.SCREW		2
-48	S1267-9W1290	.PIN - (V88308) (TRAILING EDGE FAIRING)		4
-49	41A-20004-8	.FAIRING ASSY - (VERT STABILIZER FWD) (R)		1
-50	41A-20004-2	.FAIRING - (VERTICAL STABILIZER AFT) (I)		1
-51	MS27039-1-07	.SCREW - (REAR FAIRING)		17
-52	41A-20004-32	.FAIRING - (HORIZONTAL STABILIZER STA 7)		4
-53	MS27039-1-07	.SCREW - (HOR/STAB STA 7 FAIRING)		20

-000-

SECTION 3

FUSELAGE

TABLE OF CONTENTS

Figure	Title	Page
2-3-1	Complete Forward Fuselage	2-3-2
2-3-2	Forward Fuselage Structure	2-3-4
2-3-3	Nose Fuselage Structure	2-3-8
2-3-4	Nose Fuselage Doors	2-3-12
2-3-5	Centre Fuselage & Engine Mountings	2-3-16
2-3-6	Centre Fuselage	2-3-22
2-3-7	Cockpit Structure & Floor	2-3-28
2-3-8	Cockpit Doors, Step & Windshield	2-3-34
2-3-9	Fuselage To Wing Fairings	2-3-38
2-3-10	Canopy & Fairing	2-3-42
2-3-11	Canopy Operating & Jettison Mechanism	2-3-48
2-3-12	Canopy Hinge Mechanism	2-3-50
2-3-13	Canopy Operating Linkage	2-3-52
2-3-14	Canopy Lock	2-3-56
2-3-15	Canopy Manual Operating Crank & Flexible Drive	2-3-58
2-3-16	Canopy Jettison Mechanism	2-3-60
2-3-17	Canopy Emergency Jettison Mechanism	2-3-64
2-3-18	Centre Fuselage Access Doors	2-3-68
2-3-19	Aft Fuselage & Joint Attachment	2-3-72
2-3-20	Aft Fuselage Structure	2-3-74
2-3-21	Aft Fuselage Speed Brakes	2-3-78

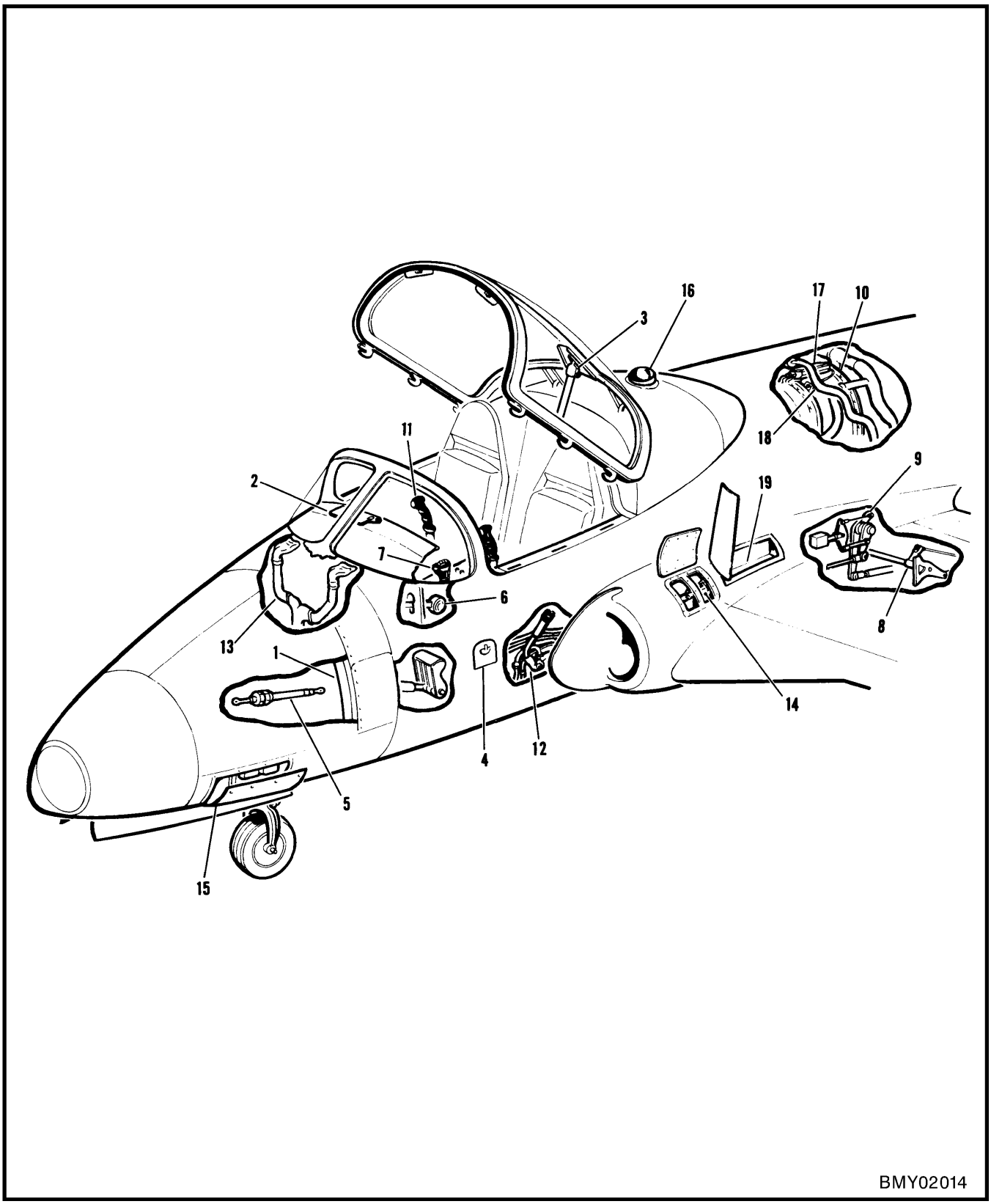

Figure 2-3-1 Complete Forward Fuselage

FIGURE AND INDEX NUMBER	GROUP FUSELAGE MAJOR ASSEMBLY COMPLETE FORWARD FUSELAGE PART NUMBER	1 2 3 4 5 6 7 NOMENCLATURE	EFFEC-TIVITY	UNITS PER ASSY
2-3-1 -	41A-35001	FUSELAGE GENL ASSY - COMPLETE FORWARD (I) (SEE FIG. 1)		1
- 1	41A-35002	.FUSELAGE STRUCTURE GENL ASSY - FORWARD (SEE FIG. 2-3-2)		REF
- 2	41A-42200	.COCKPIT EQUIP. INSTL - (SEE SECTION 12)		REF
- 3	41A-92002	.OPERATING MECHANISM INSTL - CANOPY (SEE FIG. 2-3-11)		REF
- 4	41A-92090	.JETTISON MECH INSTL - CANOPY EMERGENCY (SEE FIG. 2-3-17)		REF
- 5	41A-90370	.STEERING INSTL - NOSE WHEEL (SEE SECTION 4)		REF
	41A-90006	.FLAP CONTROL & POWER INSTL - ACCESSORY		NP
- 6	41A-90020	..VALVE CONTROL INSTL - LANDING GEAR EMERGENCY (SEE SECTION 8)		REF
- 7	41A-90751	..POWER & FLAP CONTROL INSTL - (SEE SECTION 7)		REF
- 8	41A-90852	..INTERCONNECT INSTL - FLAP (SEE SECTION 7)		REF
- 9	41A-90851	..FOLLOW UP SYS MECH INSTL - FLAP (SEE SECTION 7)		REF
-10	41A-44000	.POWER PLANT INSTL - COMPLETE (SEE SECTION 5)		REF
	41A-65000-2	.FUEL SYS INSTL - FORWARD FUSELAGE (SEE SECTION 6)		REF
-11	41A-90004	.FLIGHT CONTROLS INSTL - FORWARD FUSELAGE (SEE SECTION 7)		REF
-12	41A-42300	.HYDRAULIC SYS INSTL - FORWARD FUSELAGE (SEE SECTION 8)		REF
-13	41A-42000	.AIR CONDITIONING SYS INSTL - COMPLETE (SEE SECTION 9)		REF
-14	41A-49051	.OXYGEN SYS INSTL - (SEE SECTION 11)		REF
-15	41A-42100	.ELECTRICAL & ELECTRONIC EQUIP. INSTL - NOSE SECTION (SEE SECTION 12)		REF
-16	41A-42101	.ELECTRICAL & ELECTRONIC EQUIP. INSTL - CENTRE FUSELAGE (SEE SECTION 12)		REF
-17	41A-42105	.ELECTRICAL EQUIP. INSTL - POWER PLANT (SEE SECTION 12)		REF
-18	41A-99000	.COOLING INSTL - ZONE 1 & 2 & GENERATOR (SEE SECTION 5)		REF
	41A-42125	.LINE INSTL - COCKPIT AREA PITOT STATIC (SEE SECTION 15)		REF
-19	41A-41565	.LINER INSTL - STOWAGE FAIRING (SEE FIG. 2-3-9)		REF
		-000-		

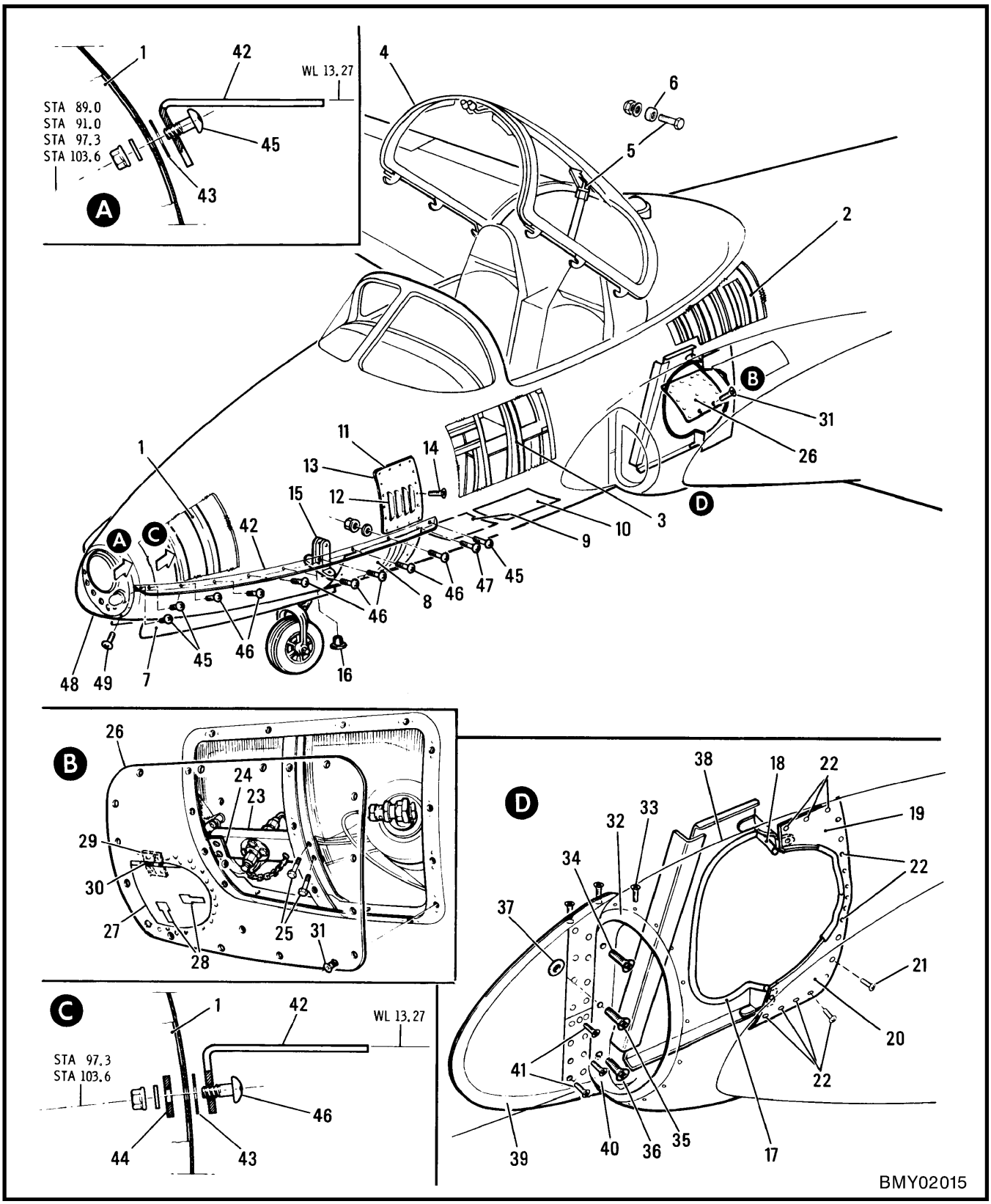

Figure 2-3-2 Forward Fuselage Structure

FIGURE AND INDEX NUMBER	GROUP FUSELAGE MAJOR ASSEMBLY FORWARD FUSELAGE STRUCTURE PART NUMBER	1 2 3 4 5 6 7 NOMENCLATURE	EFFEC-TIVITY	UNITS PER ASSY
2-3-2 -	41A-35002	FUSELAGE STRUCTURE GENL ASSY - FORWARD (I) (SEE FIG. 2-3-1)		1
- 1	41A-35003	.FUSELAGE STRUCTURE GENL ASSY - NOSE (SEE FIG. 2-3-3)		REF
- 2	41A-35004	.FUSELAGE GENL ASSY - CENTRE (SEE FIG. 2-3-5)		REF
- 3	41A-35007	.COCKPIT GENL ASSY - FUSELAGE (SEE FIG. 2-3-7)		REF
R - 4	41A-35005-814	.CANOPY ASSY - COCKPIT (SEE FIG. 2-3-10)		REF
- 5	NAS464P5A20	.BOLT - (ACTUATOR TO CANOPY)		1
- 6	41A-35095	.DISTANCE PIECE - CANOPY ACTUATOR ATT		1
	AN960PD516	.WASHER		1
	MS21042L5	.NUT		1
- 7	41A-35125-800	.DOOR ASSY - NOSE LDG/GR LH (SEE SECTION 4)		REF
	41A-35002-950	.PLATE - (FILLER)		AR
	NAS6204-10	.BOLT		4
	AN960PD416	.WASHER		4
	MS21042L4	.NUT		4
- 8	41A-35121-800	.DOOR ASSY - FS 132-149 BATTERY (SEE FIG. 2-3-4)		REF
- 9	41A-35110	.DOOR INSTL - FS 149-177 ACCESS (SEE FIG. 2-3-4)		REF
-10	41A-35092	.DOOR INSTL - FS 177 TO REAR PRESSURE BULKHEAD ACCESS (SEE FIG. 2-3-4)		REF
-11	41A-42019	.PANEL ASSY - INVERTER ACCESS LH		1
	41A-42019-1	.PANEL ASSY - INVERTER ACCESS RH		1
-12	41A-42018	..BAFFLE ASSY - NOSE FUSELAGE LH		1
	41A-42018-1	..BAFFLE ASSY - NOSE FUSELAGE RH		1
-13	NO NUMBER	..SCREEN - (AL MESH 12X12X.023 (DRW) (IAW C-12-114-000/CF-258)		1
-14	NAS517-3-1	.SCREW		32
	41A-35101	.FITTING INSTL - NOSE JACKING		NP
-15	41A-35100	..FITTING - NOSE JACKING		1
	41A-35101-4	..SHIM - NOSE JACKING FITTING		AR
-16	41A-35204	..PLUG - JACKING POINT BOLT		1
	MS35338-48	..LOCK WASHER		1
	41A-35009	.NOSE CASTING, FAIRING & SPLITTER INSTL-PORT		NP
	41A-35009-1	.NOSE CASTING, FAIRING & SPLITTER INSTL-STBD		NP
	41A-35162	..SEALING INSTL - ENGINE INTAKE DUCT LH		NP
	41A-35162-1	..SEALING INSTL - ENGINE INTAKE DUCT RH		NP
	41A-35162-2	...SEALING ASSY - ENGINE INTAKE DUCT LH		1
	41A-35162-3	...SEALING ASSY - ENGINE INTAKE DUCT RH		1
-17	41A-35162-14	....SEAL - LH		1
	41A-35162-15	....SEAL - RH		1
	41A-35162-4	...SEALING ASSY - DIAPHRAGM LH		1
	41A-35162-5	...SEALING ASSY - DIAPHRAGM RH		1
-18	41A-35162-16	....SEAL - LH		1
	41A-35162-17	....SEAL - RH		1
	41A-35168	..PLATE INSTL - ENG INTAKE DUCT SEALING LH		NP
	41A-35168-1	..PLATE INSTL - ENG INTAKE DUCT SEALING RH		NP
-19	41A-35168-2	...PLATE ASSY - UPPER SEAL LH		1
	41A-35168-3	...PLATE ASSY - UPPER SEAL RH		1
-20	41A-35168-4	...PLATE ASSY - LOWER SEAL LH		1
	41A-35168-5	...PLATE ASSY - LOWER SEAL RH		1
-21	NAS623-3-2	...SCREW		11
-22	NAS623-3-3	...SCREW		9
	41A-35120	..FAIRING ASSY - DUCT LH (I)		1
	41A-35120-1	..FAIRING ASSY - DUCT RH (I)		1

FIGURE AND INDEX NUMBER	GROUP FUSELAGE MAJOR ASSEMBLY FORWARD FUSELAGE STRUCTURE PART NUMBER		1 2 3 4 5 6 7 NOMENCLATURE	EFFEC-TIVITY	UNITS PER ASSY
2-3-2 -23	NO NUMBER	*	...BRACKET - OXYGEN CHARGING VALVE SPRT(LH)		1
-24	NO NUMBER	*	...BRACKET - ATTACHMENT (LH)		1
-25	AN3-3A	*	...BOLT - (LH)		6
	AN960PD10	*	...WASHER - (LH)		6
-26	41A-35120-68	**	...DOOR ASSY - DUCT FAIRING ACCESS LH		1
	41A-35120-69		...DOOR - DUCT FAIRING ACCESS RH (I)		1
-27	NO NUMBER	**	....DOOR ASSY - OXYGEN FILLER (LH)		1
-28	H5000-081-125	**	.....LATCH - (V83014) (LH)		1
-29	MS20001P3-7200	**	.....HINGE - (LH)		1
-30	S1440	**	.....SPRING - (V88308) (LH)		1
-31	NAS1203-2		...BOLT		19
-32	41A-35064		..NOSE CASTING ASSY - AIR INTAKE LH	001-094	1
	41A-35064-4		..NOSE CASTING ASSY - AIR INTAKE LH	095-	1
	41A-35064-1		..NOSE CASTING ASSY - AIR INTAKE RH	001-094	1
	41A-35064-5		..NOSE CASTING ASSY - AIR INTAKE RH	095-	1
-33	NAS1203-3		..BOLT - (CASTING & FAIRING)		40
-34	NAS1204-32		..BOLT - (NOSE CASTING UPPER)		1
-35	NAS1204-26		..BOLT - (NOSE CASTING CE		1
-36	NAS1204-29		..BOLT - (NOSE CASTING LOWER)		1
-37	S1246LS17-16-32		..WASHER - (V88308)		AR
	AN960PD416		..WASHER		3
	MS21042L4		..NUT		3
	41A-35114		..SPLITTER INSTL - AIR INTAKE PORT		NP
	41A-35114-1		..SPLITTER INSTL - AIR INTAKE STBD		NP
-38	41A-35114-2		...SKIN ASSY - SPLITTER R		1
	41A-35114-3		...SKIN ASSY - SPLITTER REAR UPPER RH (I)		1
-39	41A-35114-4		...SKIN ASSY - SPLITTER REAR LOWER LH (I)		1
	41A-35114-5		...SKIN ASSY - SPLITTER REAR LOWER RH (I)		1
-40	NAS1203-4		...BOLT		8
-41	NAS1203-2		...BOLT		13
	41A-35203		.STRAKE INSTL - NOSE LH		NP
	41A-35203-1		.STRAKE INSTL - NOSE RH		NP
-42	41A-35203-2		..ANGLE - LH (NOSE STRAKE)		1
	41A-35203-3		..ANGLE - RH (NOSE STRAKE)		1
-43	41A-35203-4		..PACKING - (NOSE STRAKE)		4
-44	41A-35203-6		..WASHER - SHOULDER (NOSE STRAKE)		2
-45	NAS623-3-3		..BOLT		3
-46	NAS623-3-4		..BOLT		7
-47	NAS623-3-5		..BOLT		1
	S1242AB13-19-16		..WASHER - (V88308)		1
	S1242AB13-19-32		..WASHER - (V88308)		AR
	AN960PD10L		..WASHER		11
	MS21042L3		..NUT		11
	41A-52018	***	ANTENNA INSTL - GLIDE SLOPE (NOSE) (SEE SECTION 13)		REF
	41A-35010		.NOSE CAP INSTL		NP
-48	41A-35010-12		..NOSE ASSY - (I) (TRANSPARENT)		1
-49	NAS1203-9		..SCREW		10
			-000-		
		*	IAW C-12-114-000/CF-252		
		**	IAW C-12-114-000/CF-364		
		***	IAW C-12-114-000/CD-031		

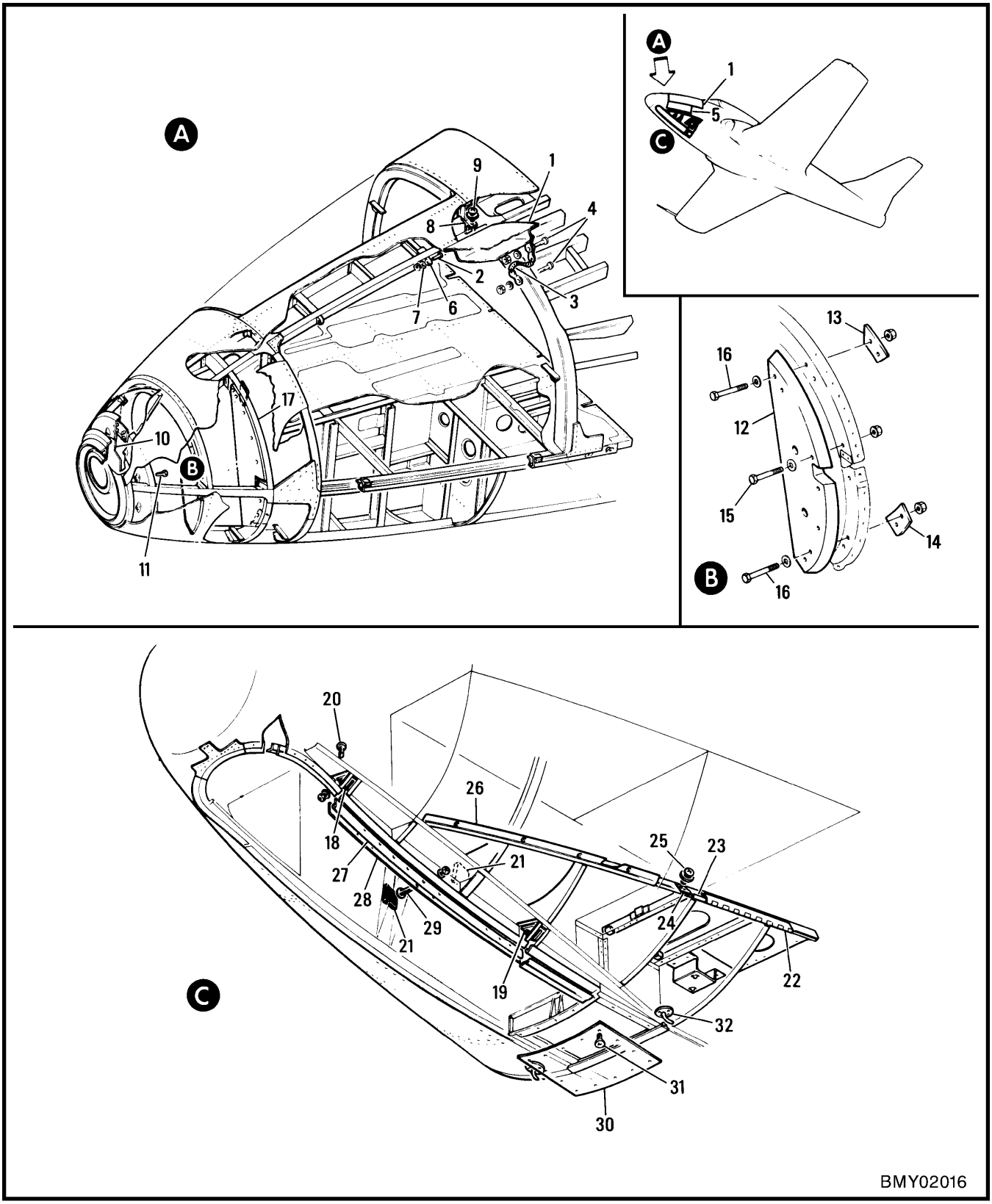

Figure 2-3-3 Nose Fuselage Structure

FIGURE AND INDEX NUMBER	GROUP FUSELAGE MAJOR ASSEMBLY NOSE FUSELAGE STRUCTURE PART NUMBER		1 2 3 4 5 6 7 NOMENCLATURE	EFFEC-TIVITY	UNITS PER ASSY
2-3-3 -	41A-35003		FUSELAGE STRUCTURE GENL ASSY - NOSE (SEE FIG. 2-3-2)		1
- 1	41A-35126-804		.DOOR ASSY - NOSE FUSELAGE EQUIPMENT (SEE FIG. 2-3-4)		REF
- 2	MS20392-3C25		.PIN		4
	AN960D416		.WASHER		12
	MS24665-132		.COTTER PIN		4
- 3	NO NUMBER	*	.WIRE ROPE ASSY - (DOOR LANDING)		2
	CF-T-75	*	..LUG TERMINAL		2
	NO NUMBER	*	..SLEEVE - INSULATING		1
- 4	NAS623-3-4		.SCREW		4
	AN960D10L		.WASHER		4
	MS21042L3		.NUT		4
- 5	41A-35116		.DOOR ASSY - RELAY PANEL ACCESS (SEE FIG. 2-3-4)		REF
	41A-35158-82		.BEAM ASSY - FORWARD FUSELAGE UPPER		1
	41A-35158-84		..FITTING ASSY - (FS 117 & 132 DOOR HINGE)		2
- 6	41A-35158-32		...FITTING		1
- 7	MS14104-4		...BEARING - (V83086)		2
- 8	41A-35127-74		.BRACKET - (FS 140)		1
- 9	NAS623-3-2		.SCREW		2
	AN960D10L		.WASHER		2
	41A-35022		.FRAME ASSY - FS 91		1
-10	41A-35022-14		..SHIELD ASSY - FS 91 FRAME (I)		1
-11	AN3-3A		..BOLT		10
	41A-35023		.FRAME ASSY - FS 97 (IAW C-12-114-000/CD-031) (MODIFIED BY NW4528148-1)		1
	NW4528148-1		.FRAME INSTL - BALLAST FS 97.30 (MODIFYING 41A-35023) (SEE SECTION 12)		NP
-12	41A-35023-12	**	..PLATE - BALANCE LH		1
	41A-35023-13	**	..PLATE - BALANCE RH		1
-13	41A-35023-16	**	..PLATE - UPPER		2
-14	41A-35023-14	**	..PLATE - LOWER		2
-15	AN4-11A	**	..BOLT		6
-16	AN4-12A	**	..BOLT		8
	NAS1149D0436K	**	..WASHER		14
	MS21042L4	**	..NUT		14
-17	41A-35024-800		.FRAME ASSY - FS 103 LH	001-010	1
	41A-35024-2		.FRAME ASSY - FS 103 LH	011-	1
	41A-35024-801		.FRAME ASSY - FS 103 RH	001-010	1
	41A-35024-3		.FRAME ASSY - FS 103 RH	011-	1
-18	41A-35112		.BRACKET - NOSE FUS STRUCTURE HINGE		2
-19	41A-35113		.BRACKET - NOSE FUS STRUCTURE HINGE		2
-20	NAS623-3-4		.SCREW		16
	AN960D10L		.WASHER		16
	MS21042L3		.NUT		16
	41A-35070		.KEEL INSTL - NOSE STRUCTURE		NP
	41A-35070-68		..KEEL ASSY - NOSE STRUCTURE LH		1
	41A-35070-69		..KEEL ASSY - NOSE STRUCTURE RH		1
-21	41A-35070-70		...PAD - RUBBER (CEMENTED)		1
	41A-35127-16		.LONGERON ASSY - LH (BATTERY FLOOR)		1
	41A-35127-17		.LONGERON ASSY - RH (BATTERY FLOOR)		1
-22	41A-35127-54		..HALF HINGE - LH (BATTERY DOOR)		1
	41A-35127-55		..HALF HINGE - RH (BATTERY DOOR)		1
-23	S1267-9-850		..PIN ASSY - (V88308)		1
-24	41A-35127-76		..STOP - HINGE LH		1
	41A-35127-77		..STOP - HINGE RH		1
		*	IAW C-12-114-000/CF-441		
		**	AS REQD FOR C OF G CORRECTION, PARTS HELD AT MOOSE JAW AND AMDU/MT VIEW		

FIGURE AND INDEX NUMBER	GROUP FUSELAGE MAJOR ASSEMBLY NOSE FUSELAGE STRUCTURE PART NUMBER	1 2 3 4 5 6 7 NOMENCLATURE	EFFEC-TIVITY	UNITS PER ASSY
2-3-3 -25	MS27039-1-09	..SCREW		2
	AN960PD10L	..WASHER		2
-26	41A-35003-212	.STRIP - RUBBING		2
-27	41A-35003-42	.SEAL - DOOR LH		1
	41A-35003-43	.SEAL - DOOR RH		1
-28	41A-35127-90	.RETAINER - SEAL LH		1
	41A-35127-91	.RETAINER - SEAL RH		1
-29	NAS623-2-2	.SCREW		18
	AN960D8L	.WASHER		18
	MS21042L08	.NUT		18
-30	41A-35135	.PANEL - FS 136-143 LOWER ACCESS (I)		1
-31	NAS1203-2	.BOLT		14
-32	41A-35003-160	.VENT ASSY - BATTERY		2
		-000-		

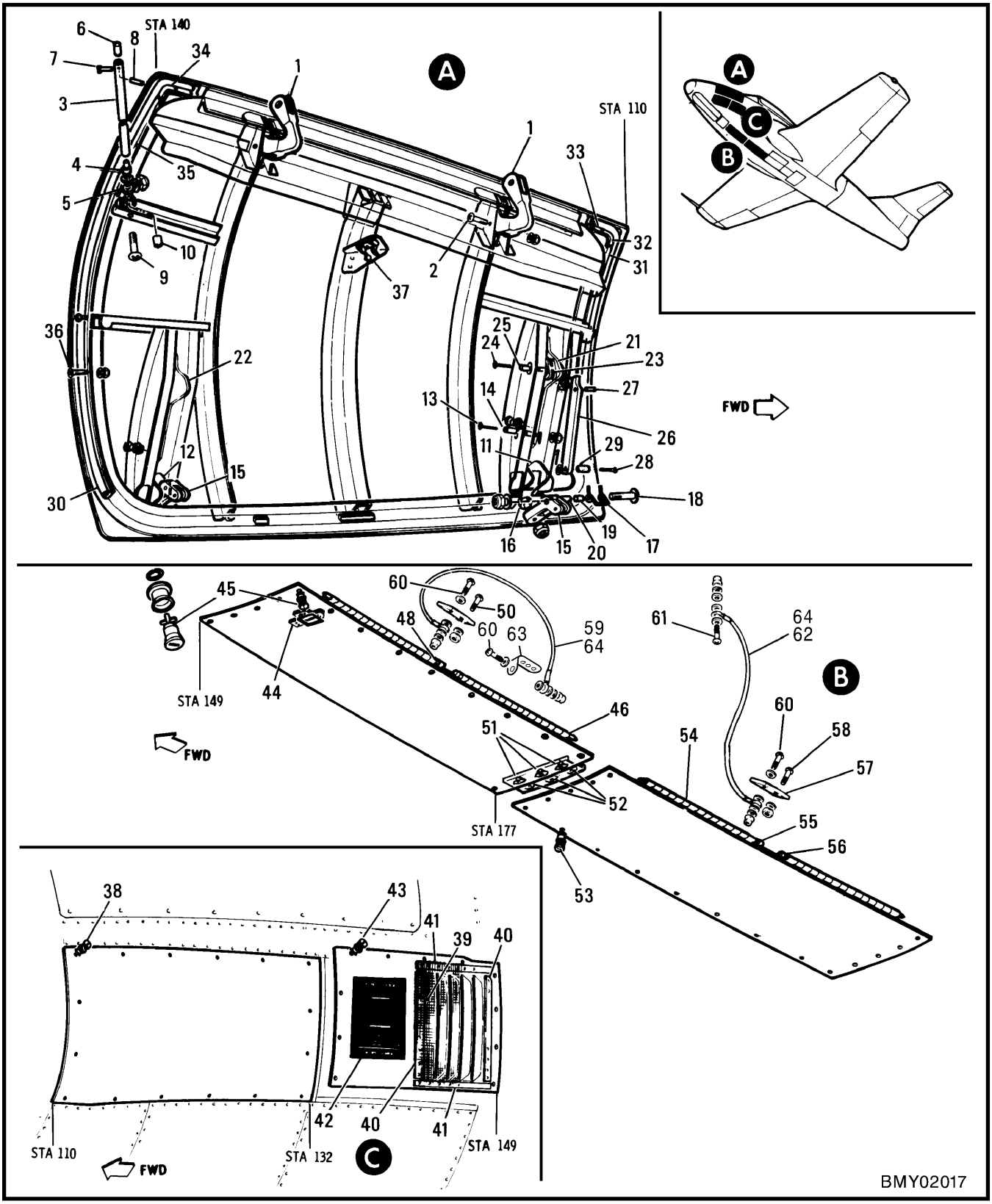

Figure 2-3-4 Nose Fuselage Doors

FIGURE AND INDEX NUMBER	GROUP FUSELAGE MAJOR ASSEMBLY NOSE FUSELAGE DOORS PART NUMBER	1 2 3 4 5 6 7 NOMENCLATURE	EFFEC-TIVITY	UNITS PER ASSY
2-3-4 -	41A-35126-804	DOOR ASSY - NOSE FUSELAGE EQUIPMENT LH (I) (SEE FIG. 2-3-3)		1
	41A-35126-805	DOOR ASSY - NOSE FUSELAGE EQUIPMENT RH (I)		1
- 1	41A-35171	.BRACKET - EQUIP. DOOR HINGE LH		2
	41A-35171-1	.BRACKET - EQUIP. DOOR HINGE RH		2
- 2	MS27039-1-17	.SCREW		4
	AN960PD10	.WASHER		4
	MS21042L3	.NUT		4
	41A-30126	.STRUT ASSY - EQUIP DOOR		1
- 3	41A-30126-2	..TUBE - STRUT		1
- 4	41A-30126-6	..ROD END		1
- 5	F34-14	..ROD END - (V73134)		1
	NAS460-416	..WASHER		1
	AN316-4R	..NUT		1
- 6	41A-30126-4	..PLUG END		1
- 7	MS20392-3C29	..PIN		1
- 8	NAS561P2-9	..PIN		1
- 9	NAS623-3-11	.SCREW		1
-10	NAS43-3-5	.SPACER		1
	AN960PD10	.WASHER		1
	MS21042L3	.NUT		1
	41A-35126-72	.BRACKET ASSY - LH (REAR LATCH UPPER)		1
	41A-35126-73	.BRACKET ASSY - RH (AFT LATCH UPPER)		1
-11	41A-35126-76	..BRACKET - LH		1
	41A-35126-77	..BRACKET - RH		1
	214-16	..RECEPTACLE - (V71286)		1
	41A-35126-128	.SHIM		AR
	41A-35126-130	.SHIM		AR
	41A-35126-70	.BRACKET ASSY - LH (DOOR AFT LATCH)		1
	41A-35126-71	.BRACKET ASSY - RH (DOOR AFT LATCH)		1
-12	41A-35126-74	..BRACKET - LH		1
	41A-35126-75	..BRACKET - RH		1
	214-16	..RECEPTACLE - (V71286)		1
	41A-35126-124	.SHIM		AR
	41A-35126-126	.SHIM		AR
-13	NAS623-3-16	.SCREW - (LINK STOP)		2
-14	NAS43HT3-63	.SPACER		2
		OR		
	NAS43-3-63	.SPACER		
	AN960PD10L	.WASHER		2
	MS21042L3	.NUT		2
-15	41A-35172	.LATCH - NOSE FUS EQUIP DOOR		2
-16	NAS428-4-12	.BOLT - (LATCH ADJUSTING)		2
	AN316-4R	.NUT		2
-17	41A-30132	.SPRING - EQUIP DOOR LATCH		2
-18	MS27039-1-28	.SCREW - (LATCH & SPRING RETAINING)		2
-19	NAS43DD3-9	.SPACER - (SPRING)		4
-20	NAS43HT3-56	.SPACER - (LATCH)		2
		OR		
	NAS43-3-56	.SPACER		
	AN960PD10L	.WASHER		2
	MS21042L3	.NUT		2
	41A-30125	.LATCH ASSY - NOSE FUSELAGE EQUIP DOOR FORWARD LH		1
	41A-30125-1	.LATCH ASSY - NOSE FUSELAGE EQUIP DOOR FORWARD RH		1
-21	41A-30125-2	..LATCH - FWD LH		1
	41A-30125-3	..LATCH - FWD RH		1
	4002H	..GROMMET - (V71286)		1
	R4G	..SNAP RING - (V71286)		1
	4002-5H	..STUD - (V71286)		1

FIGURE AND INDEX NUMBER	GROUP FUSELAGE MAJOR ASSEMBLY NOSE FUSELAGE DOORS PART NUMBER	1 2 3 4 5 6 7 NOMENCLATURE	EFFEC-TIVITY	UNITS PER ASSY
2-3-4 -	41A-30124	.LATCH ASSY - NOSE FUSELAGE EQUIP DOOR AFT LH		1
	41A-30124-1	.LATCH ASSY - NOSE FUSELAGE EQUIP DOOR AFT RH		1
-22	41A-30124-2	..LATCH - AFT LH		1
	41A-30124-3	..LATCH - AFT RH		1
	4002H	..GROMMET - (V71286)		1
	R4G	..SNAP RING - (V71286)		1
	4002-5H	..STUD - (V71286)		1
-23	41A-35173	.LINK - NOSE FUS EQUIP DOOR		2
-24	MS27039-1-24	.SCREW - (LATCH & LINK RETAINING)		2
-25	NAS43HT3-63	.SPACER		2
		OR		
	NAS43-3-63	.SPACER		
	AN960PD10	.WASHER		2
	MS21042L3	.NUT		2
-26	41-30127	.LINK - NOSE FUSELAGE EQUIP DOOR		2
-27	41-30129	.PIN - NOSE FUSELAGE EQUIP DOOR		2
-28	MS20392-2C25	.PIN		2
-29	NAS43DD3-4	.SPACER		2
	AN960PD10	.WASHER		2
	MS24665-130	.COTTER PIN		2
-30	41A-35126-140	.SEAL -(SEE PART 4 BULK MATERIAL CHART)		1
-31	41A-35126-86	.RETAINER - LH (SEAL FORWARD)		1
	41A-35126-87	.RETAINER - RH (SEAL FORWARD)		1
-32	41A-35126-36	.RETAINER - (SEAL FORWARD CORNER)		1
-33	41A-35126-38	.RETAINER - (SEAL UPPER)		1
-34	41A-35126-34	.RETAINER - (SEAL REAR CORNER)		1
-35	41A-35126-84	.RETAINER - LH (SEAL REAR)		1
	41A-35126-85	.RETAINER - RH (SEAL REAR)		1
-36	MS24693-51	.SCREW - (SEAL RETAINING)		40
	AN960PD8	.WASHER		40
	MS21042L8	.NUT		40
-37	41A-35126-138	.CLIP ASSY - DOOR STRUT SPRING LH		1
	41A-35126-139	.CLIP ASSY - DOOR STRUT SPRING RH		1
	NAS6203-10	.BOLT		2
	AN960-10	.WASHER		2
	AN363C1032	.NUT		2
	41A-35116	DOOR ASSY - FS 110-132 RELAY PANEL ACCESS LH (R) (SEE FIG. 2-3-3)	001-120	1
	41A-35116-800	DOOR ASSY - FS 110-132 RELAY PANEL ACCESS LH (R)	121-	1
	41A-35116-1	DOOR ASSY - FS 110-132 RELAY PANEL ACCESS RH (R)	001-120	1
	41A-35116-801	DOOR ASSY - FS 110-132 RELAY PANEL ACCESS RH (R)	121-	1
-38	40S5-3	.STUD - (V71286)		16
	4002H	.GROMMET - (V71286)		16
	R4G	.SNAP RING - (V71286)		16
	41A-35121-800	DOOR ASSY - FS 132-149 BATTERY LH (R) (SEE FIG. 2-3-2)		1
	41A-35121-801	DOOR ASSY - FS 132-149 BATTERY RH (R)		1
	41A-35121-32	.SCREEN ASSY - BATTERY DOOR LH (FOR SPARES ORDER 41A-35121-34)		1
	41A-35121-34	.SCREEN ASSY - BATTERY DOOR LH (SPARE FOR 41A-351)		
	41A-35121-33	.SCREEN ASSY - BATTERY DOOR RH (FOR SPARES ORDER 41A-35121-35)		1
	41A-35121-35	.SCREEN ASSY - BATTERY DOOR RH (SPARE FOR 41A-351 21-33)		
-39	41A-35121-26	..SCREENING - DOOR LH		1
	41A-35121-27	..SCREENING - DOOR RH		1
-40	41A-35121-28	..MEMBER - EDGE (UPPER & LOWER		2
-41	41A-35121-30	..MEMBER - EDGE (SIDES)		2
-42	C74C00179	..DECAL - NICAD CAUTION (IAW C-12-114-000/CF-370)		1

FIGURE AND INDEX NUMBER	GROUP FUSELAGE MAJOR ASSEMBLY NOSE FUSELAGE DOORS PART NUMBER	1 2 3 4 5 6 7 NOMENCLATURE	EFFEC-TIVITY	UNITS PER ASSY
2-3-4 -43	4002-5	.STUD - (V71286) (IAW C-12-114-000/CF-372)		11
	4002H	.GROMMET - (V71286)		11
	R4G	.SNAP RING - (V71286)		11
	41A-35110	DOOR INSTL - FS 149-177 ACCESS (SEE FIG. 2-3-2)		NP
	41A-35110-36	.DOOR ASSY - FS 149-177 ACCESS (I)		1
-44	41A-35156-14	..SCOOP - VENTILATION OR		1
	41A-35110-952	..SCOOP - VENTILATION		
-45	40S5-3	..STUD - (V71286)		17
	4002H	..GROMMET - (V71286)		17
	R4G	..SNAP RING - (V71286)		17
-46	41A-35110-6	..HALF HINGE		1
-47	S1267-9-980	.PIN ASSY - (V88308)		1
-48	S1267-9-968	.PIN ASSY - (V88308)		1
-49	41A-35074-12	.PLATE - (HINGE STOP)		1
-50	NAS623-3-3	.SCREW		2
	AN960D10L	.WASHER		2
	MS21042L3	.NUT		2
	41A-35081-20	.CHANNEL ASSY - (I)		1
-51	244-16	..RECEPTACLE - (V71286)		3
-52	214-16	..RECEPTACLE - (V71286)		3
	41A-35092	DOOR INSTL - FS 177 TO REAR PRESSURE BULKHEAD ACCESS (SEE FIG. 2-3-2)		NP
	41A-35092-2	.DOOR ASSY - FS 177 BULKHEAD (I)		1
-53	40S5-3	..STUD - (V71286)		17
	4002H	..GROMMET - (V71286)		17
	R4G	..SNAP RING - (V71286)		17
-54	41A-35092-16	..HALF HINGE		1
-55	S1267-9-995	.PIN ASSY - (V88308)		1
-56	S1267-9-1196	.PIN ASSY - (V88308)		1
-57	41A-35074-12	.PLATE - (HINGE STOP)		1
-58	NAS623-3-3	.SCREW		1
	AN960D10L	.WASHER		1
	MS21042L3	.NUT		1
	NW4528142-1	JUMPER INSTL - BONDING (SEE SECTION 12)		REF
-59	M83413/8-A06BB	.JUMPER ASSY		2
	M23053/5-104-9	.SLEEVING - INSULATION		AR
-60	MS35207-263	.SCREW		3
	AN960JD10L	.WASHER		6
	AN960-10L	.WASHER		3
	MS35338-43	.WASHER-LOCK		3
	MS21042L3	.NUT		3
-61	MS35207-230	.SCREW		1
	AN960JD6L	.WASHER		2
	AN960-6L	.WASHER		1
	MS35338-41	.WASHER-LOCK		1
	MS21042L06	.NUT		1
-62	M83413/8-A12BB	.JUMPER ASSY		1
-63	NW4602007-1	.BRACKET		1
	CR3213-4	.BLIND - RIVET		3
		-000-		

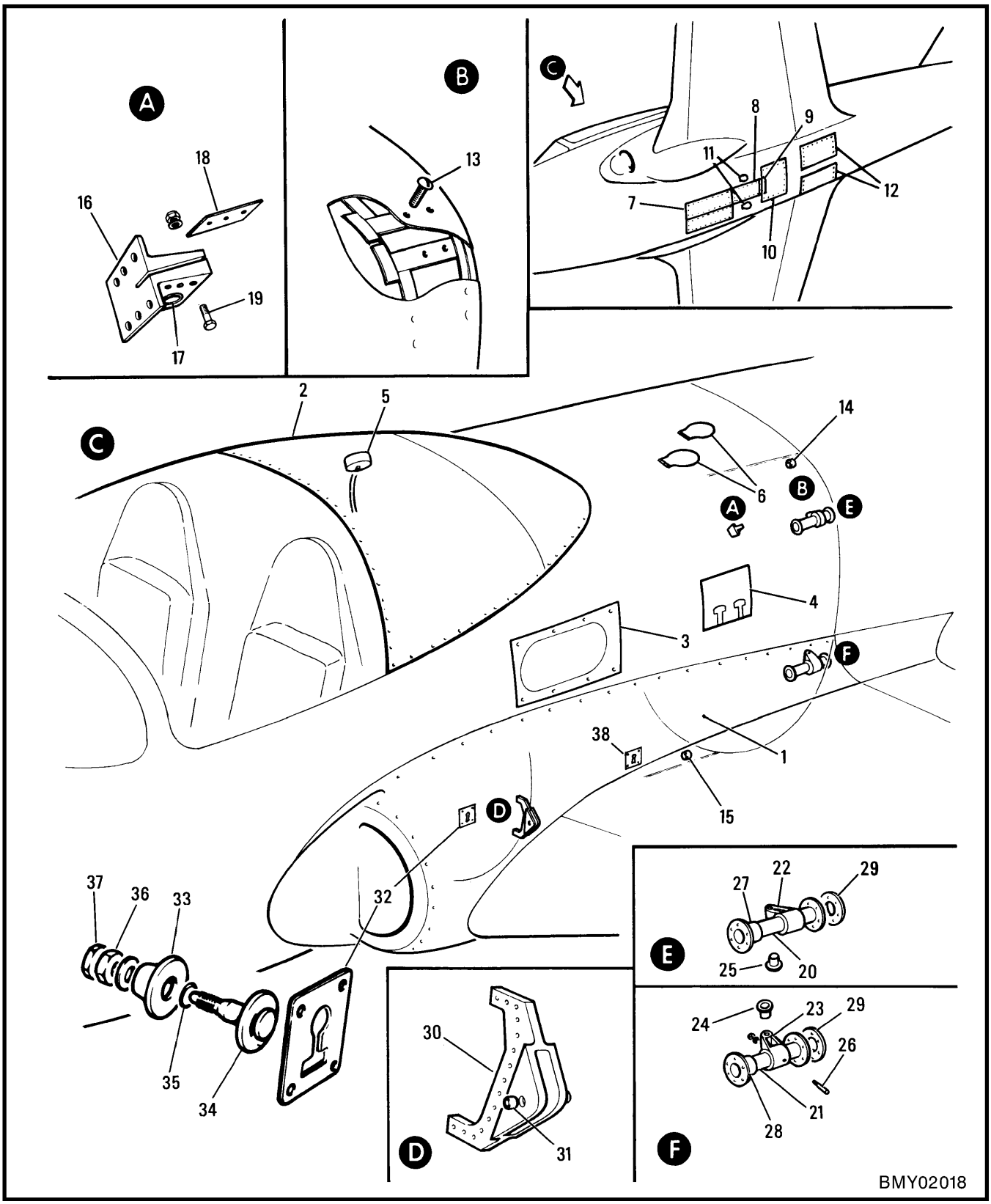

Figure 2-3-5 (Sheet 1 of 2) Centre Fuselage & Engine Mountings

FIGURE AND INDEX NUMBER	GROUP FUSELAGE MAJOR ASSEMBLY CENTRE FUSELAGE & ENGINE MOUNTINGS PART NUMBER	1 2 3 4 5 6 7 NOMENCLATURE	EFFEC-TIVITY	UNITS PER ASSY
2-3-5 -	41A-35004	FUSELAGE GENL ASSY - CENTRE (SEE FIG. 2-3-2)		NP
- 1	41A-35160-804	.FAIRING INSTL - FUSELAGE TO WING UPPER (SEE FIG. 2-3-9)		REF
- 2	41A-35031	.FAIRING INSTL - CANOPY (SEE FIG. 2-3-10)		REF
- 3	41A-35069	.DOOR INSTL - FUEL TANK ACCESS (SEE FIG. 2-3-18)		REF
- 4	41A-35140	.DOOR INSTL - HYDRAULIC TANK FILLER ACCESS (SEE FIG. 2-3-18)		REF
- 5	41A-65243	.FILLER INSTL - FUEL (SEE SECTION 6)		REF
- 6	41A-35103	.DOOR INSTL - FLIGHT CONTROLS BREAK ACCESS (SEE FIG. 2-3-18)		REF
- 7	41A-35081	.DOOR INSTL - FS 236 TO REAR BULKHEAD ACCESS (SEE FIG. 2-3-18)		REF
- 8	41A-35074	.DOOR INSTL - FS 235-257 ACCESS (SEE FIG. 2-3-18)		REF
- 9	41A-35081-34	.CHANNEL ASSY - (DOOR LANDING PLATE) (INTERCHANGEABLE)		1
-10	41A-35096-40	.DOOR ASSY - COMPRESSOR BLADE (SEE FIG. 2-3-18)		REF
-11	41A-35106	.DOOR INSTL - TANK WATER DRAIN ACCESS (SEE FIG. 2-3-18)		REF
-12	41A-35129-48	.DOOR INSTL - ENGINE ACCESS (SEE FIG. 2-3-18)		REF
-13	AN565A428H9	.SCREW - (HOISTING HOLE PLUG)		8
-14	41A-35174-2	.BUSHING - (FUS UPPER ATT ACHING STA 308)		2
-15	41A-35174-4	.BUSHING - (FUS LOWER ATTACHING STA 308)		2
	41A-35149	.MOUNTING INSTL - ENGINE FORWARD LH		NP
	41A-35149-1	.MOUNTING INSTL - ENGINE FORWARD RH		NP
	41A-35178-2	..MOUNTING ASSY - FS 285 ENGINE FORWARD LH (R)		1
	41A-35178-3	..MOUNTING ASSY - FS 285 ENGINE FORWARD RH (R)		1
-16	41A-35178-4	...MOUNTING - FS 285 ENGINE FORWARD LH		1
	41A-35178-5	...MOUNTING - FS 285 ENGINE FORWARD RH		1
-17	NAS75-4-005	...BUSHING		2
-18	41A-35149-10	..SHIM - ENGINE FORWARD M OUNTING		1
	41A-35149-12	..SHIM - ENGINE FORWARD MOUNTING		1
-19	NAS1103-16	..BOLT		3
	AN960PD10	..WASHER		3
	MS21042L3	..NUT		3
	41A-35148	.MOUNTING INSTL - FS 306 ENGINE		NP
	41A-35148-2	..MOUNTING ASSY - ENGINE UPPER LH (R)		1
	41A-35148-3	..MOUNTING ASSY - ENGINE UPPER RH (R)		1
	41A-35148-4	..MOUNTING ASSY - ENGINE UPPER LH (R)		1
	41A-35148-5	..MOUNTING ASSY - ENGINE LOWER RH (R)		1
-20	41A-35147-2	...TUBE ASSY - ENGINE MOUNTING UPPER LH		1
	41A-35147-3	...TUBE ASSY - ENGINE MOUNTING UPPER RH		1
-21	41A-35147-4	...TUBE ASSY - ENGINE MOUNTING LOWER LH		1
	41A-35147-5	...TUBE ASSY - ENGINE MOUNTING LOWER RH		1
	41A-35154	...FITTING ASSY - ENGINE MOUNTING UPPER LH		1
	41A-35154-1	...FITTING ASSY - ENGINE MOUNTING UPPER RH		1
	41A-35155	...FITTING ASSY - ENGINE MOUNTING LOWER LH		1
	41A-35155-1	...FITTING ASSY - ENGINE MOUNTING LOWER RH		1
-22	41A-35154-2	....FITTING - ENGINE MOUNTING UPPER LH		1
	41A-35154-3	....FITTING - ENGINE MOUNTING UPPER RH		1
-23	41A-35155-2	....FITTING - ENGINE MOUNTING LOWER LH		1
	41A-35155-3	....FITTING - ENGINE MOUNTING LOWER RH		1
-24	41A-61213-6	....BUSHING - ENGINE MOUNT		1
-25	41A-61213-8	....BUSHING - ENGINE MOUNT		1
-26	AN386-2-14A	...PIN - (FITTING RETAINING)		2
	AN975-3	...WASHER		2
	MS21042L3	...NUT		2
-27	41A-35152-4	...FITTING - ENGINE MOUNT UPPER		1
-28	41A-35152-2	...FITTING - ENGINE MOUNT LOWER		1
-29	41A-35147-12	..SHIM - ENGINE UPPER MOUNTING		2
	41A-35147-16	..SHIM - ENGINE LOWER MOUNTING		2
	41A-35041	.FRAME ASSY - BULKHEAD FS 235		1

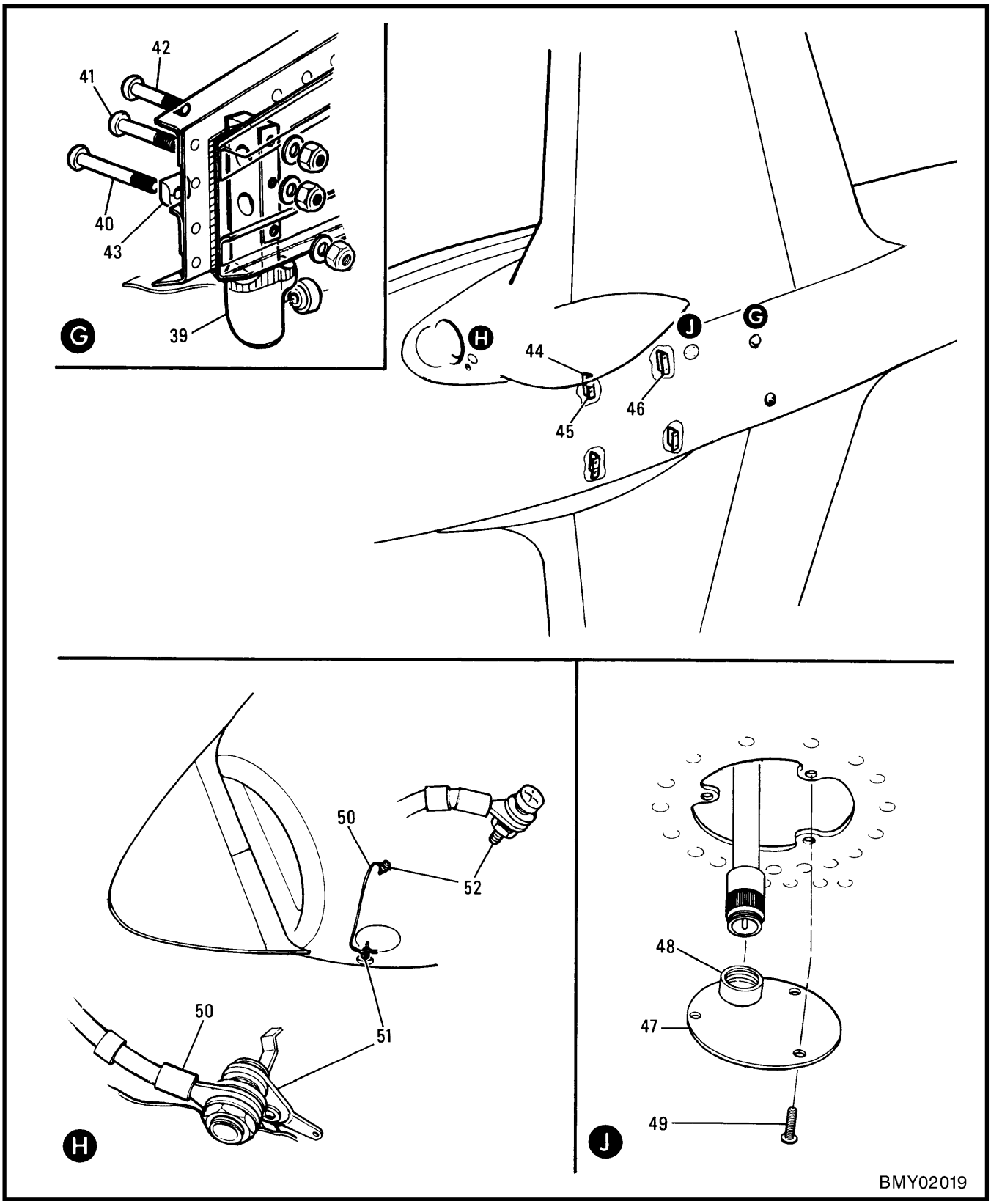

Figure 2-3-5 (Sheet 2 of 2) Centre Fuselage & Engine Mountings

FIGURE AND INDEX NUMBER	GROUP FUSELAGE MAJOR ASSEMBLY CENTRE FUSELAGE & ENGINE MOUNTINGS PART NUMBER		1 2 3 4 5 6 7 NOMENCLATURE	EFFEC-TIVITY	UNITS PER ASSY
2-3-5 -30	41A-35052		..FITTING - WING TO FUS ATT STA 235 LH		1
	41A-35052-1		..FITTING - WING TO FUS ATT STA 235 RH		1
-31	NAS75-9-009		...BUSHING		2
-32	FCB20441		..FITTING - (V83624) (FUEL CELL KEYHOLE)		25
	FCC20458		..PIN ASSY - (V83624) (FUEL CELL HANGER)		25
-33	FCB20104		...PLATE - (V83624)		1
-34	FCB20459		...PIN - (V83624)		1
-35	MS29513-12		...O-RING		1
	AN960D516		...WASHER		1
-36	MS35649-2314		...NUT		1
-37	AC356-518		...LOCK NUT - (V83624)		1
	41A-35084		.STRUCTURE INSTL - REAR FUEL TANK LH FS 257-277		NP
	41A-35084-1		.STRUCTURE INSTL - REAR FUEL TANK RH FS 257-277		NP
-38	FCB20441		..FITTING - (V83624) (FUEL CELL KEYHOLE)		3
	FCC20458		..PIN ASSY - (V83624) (FUEL CELL HANGER)		3
	FCB20104		...PLATE - (V83624)		1
	FCB20459		...PIN - (V83624)		1
	MS29513-12		...O-RING		1
	AN960D516		...WASHER		1
	MS35649-2314		...NUT		1
	AC356-518		...LOCK NUT - (V83624)		1
	K41A-30019 C C	*	KIT - AUX FUEL TANKS INSTL (LH)		NP
	K41A-30019-1	*	KIT - AUX FUEL TANKS INSTL (RH)		NP
-39	41G-35043		.FITTING ASSY - CRUTCH		1
	41G-35043-2		..FITTING		1
	LSS-4		..BEARING - (V73134)		1
-40	NAS1103-29		.BOLT		1
-41	NAS1103-18		.BOLT		1
-42	NAS1103-20		.BOLT		1
-43	K41A-30019-38		.WASHER		1
	AN960PD10		.WASHER		3
	MS21042L3		.NUT		3
-44	41A-35215		.FITTING ASSY - FS 236 PYLON ATTACHING (LH OUTER)		1
	41A-35215-1		.FITTING ASSY - FS 236 PYLON ATTACHING (RH OUTER)		1
	41G-35032		..BUSHING		1
	NAS3003-15		.BOLT		2
	NAS3003-13		.BOLT		2
	S1246AB15-16-20		.WASHER - (V88308)		4
	MS21042L3		.NUT		4
-45	41A-35214		.FITTING ASSY - FS 236 PYLON ATTACHING (LH INNER)		1
	41A-35214-1		.FITTING ASSY - FS 236 PYLON ATTACHING (RH INNER)		1
	41G-35032		..BUSHING		1
	NAS3003-8		.BOLT		4
	S1246AB15-16-20		.WASHER - (V88308)		3
	K41A-30019-38		.WASHER		1
	MS21042L3		.NUT		4
-46	41A-35216		.FITTING ASSY - FS 257 PYLON ATTACHING (LH)		1
	41A-35216-1		.FITTING ASSY - FS 257 PYLON ATTACHING (RH)		1
	41G-35032		..BUSHING		2
	NAS3003-12		.BOLT		2
	NAS3003-13		.BOLT		1
	S1246AB15-16-20		.WASHER - (V88308)		5
	S1246AB15-16-63		.WASHER - (V88308)		1
	MS21042L3		.NUT		3
		*	IAW C-12-114-000/CD-031		

FIGURE AND INDEX NUMBER	GROUP FUSELAGE MAJOR ASSEMBLY CENTRE FUSELAGE & ENGINE MOUNTINGS PART NUMBER	1 2 3 4 5 6 7 NOMENCLATURE	EFFEC-TIVITY	UNITS PER ASSY
2-3-5 -47	K41A-30019-40	.DOOR ASSY - PYLON ELECTRICS STOWAGE LH		1
	K41A-30019-41	.DOOR ASSY - PYLON ELECTRICS STOWAGE RH		1
-48	K41A-30019-42	.CAP		2
-49	NAS623-3-2	.SCREW		6
	NW4528142-1	JUMPER INSTL - BONDING (SEE SECTION 12)		REF
-50	M83413/8-A08BE	.JUMPER ASSY - (LH & RH)		2
-51	MS90298-2	.RECEPTACLE - FUEL NOZZLE GROUNDING		2
	MS35338-46	.WASHER-LOCK		2
-52	MS35207-265	.SCREW		2
	AN960JD10L	.WASHER		6
	MS35338-43	.WASHER-LOCK		2
	MS21042L3	.NUT		2
		-000-		

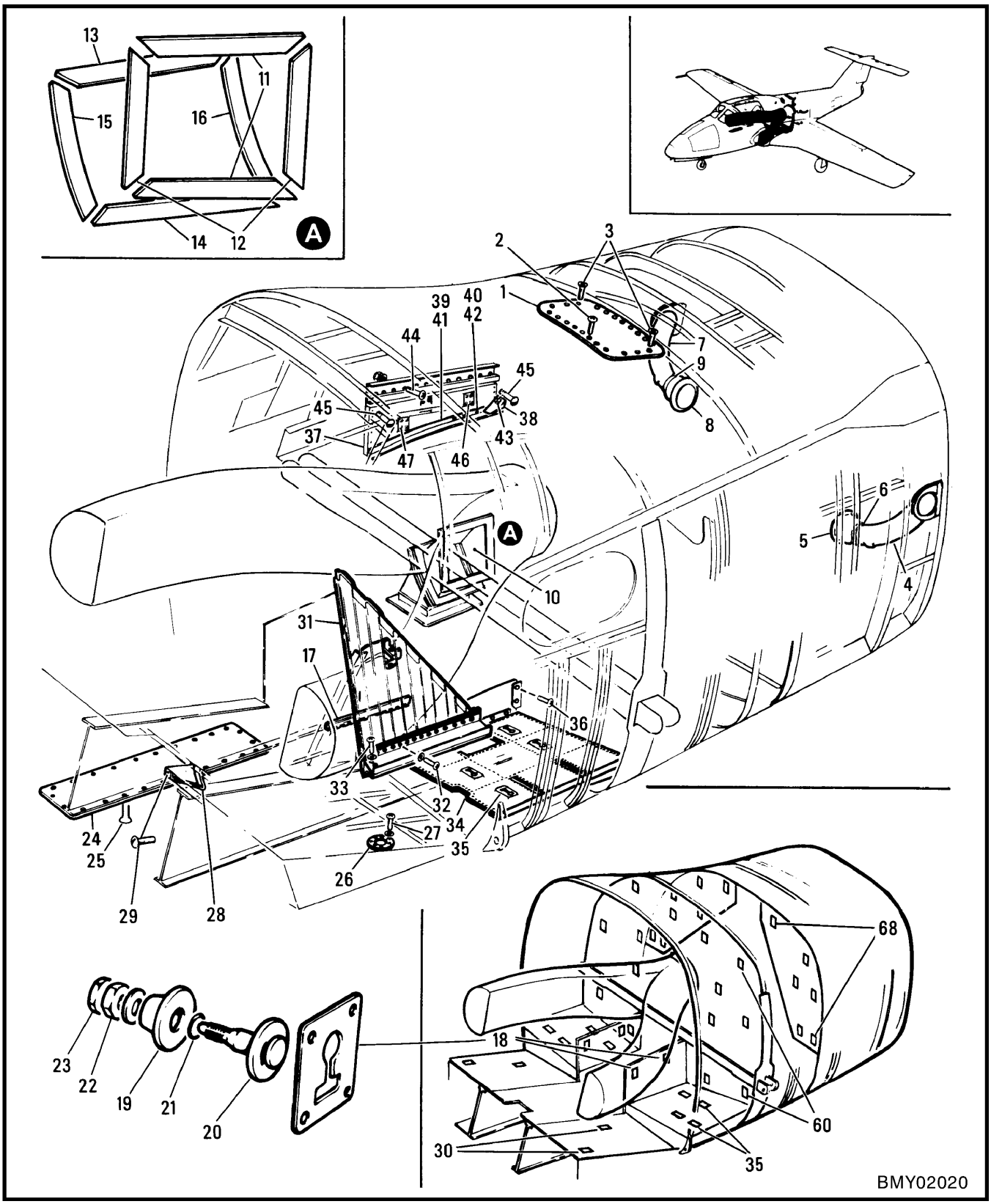

Figure 2-3-6 (Sheet 1 of 3) Centre Fuselage

FIGURE AND INDEX NUMBER	GROUP FUSELAGE MAJOR ASSEMBLY CENTRE FUSELAGE PART NUMBER		1 2 3 4 5 6 7 NOMENCLATURE	EFFEC-TIVITY	UNITS PER ASSY
2-3-6 -	41A-35004		FUSELAGE GENL ASSY - CENTRE (SEE FIG. 2-3-5)		REF
- 1	41A-35107		.DOOR - FS 268-278 UPPER ACCESS (I)		1
- 2	NAS623-3-2		.SCREW		12
- 3	NAS1203-2		.BOLT		2
	41A-35139		.DUCT INSTL - COMPRESSOR BLEED (PORT)		NP
	41A-61410		..DUCT INSTL - COMPRESSOR BLEED EXIT LH		NP
- 4	11A00228G01	*	...DUCT ASSY - LH (V35013)		1
	NO NUMBER	*	...PACKER - LH (MAKE FROM AMS4036 2024-T3 0.063 IN. THICK)		1
- 5	11A00227P01	*	...CONNECTOR - (V35013) (AIR BLEED DUCT FLEX)		1
- 6	QS200M48S		...CLAMP - (V08484)		1
	41A-61410-1		.DUCT INSTL - COMPRESSOR BLEED EXIT RH		NP
- 7	11A0028G02	*	..DUCT ASSY - RH (V35013)		1
	NO NUMBER	*	..PACKER - RH (MAKE FROM AMS4036 2024-T3 0.063 IN. THICK)		1
- 8	11A00227P01	*	..CONNECTOR - (V35013) (AIR BLEED DUCT FLEX)		1
- 9	QS200M48S		..CLAMP - (V08484)		1
	41A-96202-4		.DUCT INSTL - HEAT EXCHANGER COOLING AIR (STBD)		NP
-10	41A-96202-48		..DUCT ASSY - HEAT EXCHANGER COOLING AIR		1
-11	41A-96202-42		..SEAL - (DUCT TO EXCHANGER UPPER & LOWER) (MAKE FROM BULK MATERIAL AMS 3197 0.250 IN. THK)		2
-12	41A-96202-44		..SEAL - (DUCT TO EXCHANGER FORWARD & REAR) (MAKE FROM BULK MATERIAL AMS 3197 0.250 IN. THK)		2
-13	41A-96202-50		..SEAL - (FUSELAGE TO DUCT UPPER) (MAKE FROM BULK MATERIAL AMS 3197 0.375 IN. THK)		1
-14	41A-96202-52		..SEAL - (FUSELAGE TO DUCT LOWER) (MAKE FROM BULK MATERIAL AMS 3197 0.375 IN. THK)		1
-15	41A-96202-56		..SEAL - (FUSELAGE TO DUCT FORWARD) (MAKE FROM BULK MATERIAL AMS 3197 0.375 IN. THK)		1
-16	41A-96202-54		..SEAL - (FUSELAGE TO DUCT REAR) (MAKE FROM BULK MATERIAL AMS 3197 0.375 IN. THK)		1
	41A-35054		.KEEL STRUCTURE INSTL - CENTRE FUSELAGE		NP
	41A-35054-2		..KEEL ASSY - LH		1
	41A-35054-3		..KEEL ASSY - RH		1
-17	41A-35054-80		...HINGE - LH		1
	41A-35054-78		...HINGE - RH		1
-18	FCB20441		...FITTING - (V83624) (FUEL CELL KEYHOLE)		2
	FCC20458		...PIN ASSY - (V83624) (FUEL CELL HANGER)		2
-19	FCB20104		....PLATE - (V83624)		1
-20	FCB20459		....PIN - (V83624)		1
-21	MS29513-12		....O-RING		1
	AN960D516		....WASHER		1
-22	MS35649-2314		....NUT		1
-23	AC356-518		....LOCK NUT - (V83624)		1
	41A-35061		.SUPPORT & FLOOR BEAM INSTL - REAR PRESSURE BULKHEAD TO FS 236 WATER SEPARATOR (STBD)		NP
	41A-35061-4		..DOOR ASSY - (I)		1
-24	41A-35061-22		...DOOR		1
-25	NAS1203-3		..BOLT		24
	41A-35059		.FLOOR INSTL - REAR PRESS BULKHEAD TO FS 236 FWD FUEL CELL		NP
		*	IAW C-12-114-000/CF-488		

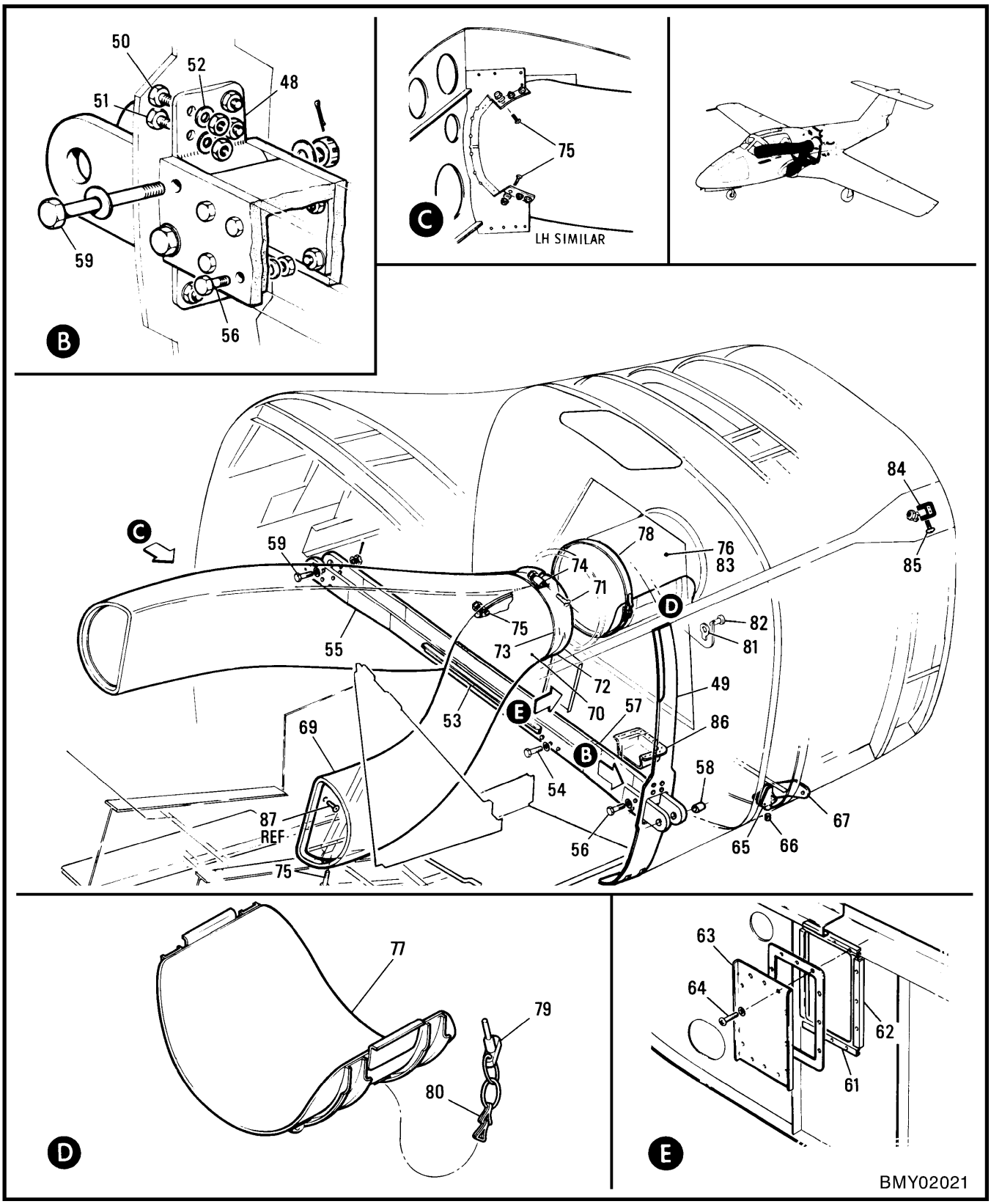

Figure 2-3-6 (Sheet 2 of 3) Centre Fuselage

FIGURE AND INDEX NUMBER	GROUP FUSELAGE MAJOR ASSEMBLY CENTRE FUSELAGE PART NUMBER	1 2 3 4 5 6 7	NOMENCLATURE	EFFEC-TIVITY	UNITS PER ASSY
2-3-6 -26	41A-35059-42		..PLATE		2
-27	MS35207-261		..SCREW		8
	AN960D10		..WASHER		8
-28	41A-35059-50	*	..BRACKET		2
-29	MS35206-245	*	..SCREW		2
	AN960D8	*	..WASHER		2
	41A-35088-1		.PANEL INSTL - FORWARD FUEL CELL SUPPORT FLOOR RH		NP
-30	FCB20441		..FITTING - (V83624) (FUEL CELL KEYHOLE)		4
	FCC20458		..PIN ASSY - (V83624) (FUEL CELL HANGER)		4
	FCB20104		...PLATE - (V83624)		1
	FCB20459		...PIN - (V83624)		1
	MS29513-12		...O-RING		1
	AN960D516		...WASHER		1
	MS35649-2314		...NUT		1
	AC356-518		...LOCK NUT - (V83624)		1
	MS21042L08	*	..NUT		2
	41A-35088		.PANEL INSTL - FORWARD FUEL CELL SUPPORT FLOOR LH		NP
-31	41A-35088-2		..PANEL ASSY - FWD FUEL CELL FLOOR LH (I)		1
	41A-35088-3		..PANEL ASSY - FWD FUEL CELL FLOOR RH (I)		1
-32	NAS623-3-3		..SCREW		15
-33	NAS623-3-4		..SCREW		2
	AN960PD10L		..WASHER		17
	41A-35060		.FLOOR INSTL - FS 236-258 FORWARD TO MAIN SPAR BULKHEAD		NP
-34	41A-35060-6		..PANEL - LH		1
	41A-35060-7		..PANEL - RH		1
-35	FCB20441		..FITTING - (V83624) (FUEL CELL KEYHOLE)		8
	FCC20458		..PIN ASSY - (V83624) (FUEL CELL HANGER)		8
	FCB20104		...PLATE - (V83624)		1
	FCB20459		...PIN - (V83624)		1
	MS29513-12		...O-RING		1
	AN960D516		...WASHER		1
	MS35649-2314		...NUT		1
	AC356-518		...LOCK NUT - (V83624)		1
-36	NAS623-3-1		..SCREW		14
	41A-65242		.PARTITION INSTL - CENTRAL FUEL CELL		NP
-37	41A-65242-2		..PARTITION ASSY		1
-38	41A-35189		..GUARD - LH		1
	41A-35189-1		..GUARD - RH		1
	41A-65242-6		..PARTITION ASSY		1
	41A-65242-7		..PARTITION ASSY		1
-39	41A-65242-72		...STRIP - RUBBER		1
-40	41A-65242-73		...STRIP - RUBBER		1
-41	41A-65242-74		...RUBBER EXTRUSION		1
-42	41A-65242-75		...RUBBER EXTRUSION		1
-43	NAS623-3-5		..SCREW		2
-44	NAS623-3-1		..SCREW		27
-45	NAS623-3-4		..SCREW		10
	AN960-10L		..WASHER		35
	MS21042L3		..NUT		2
-46	P101F12-2		..PLUG - (V29372)		14
-47	P101F12-0		..PLUG - (V29372)		12
	S101F12-08		..SLEEVE - (V29372)		26
	41A-35044		.FRAME ASSY - FS 257 MAIN SPAR BULKHEAD		1
-48	41A-35063		..FITTING - FS 257 MAIN SPAR LH		1
	41A-35063-1		..FITTING - FS 257 MAIN SPAR RH		1
-49	41A-35044-114		..STRAP - LH		1
	41A-35044-115		..STRAP - RH		1
		*	IAW C-12-114-000/CD-006		

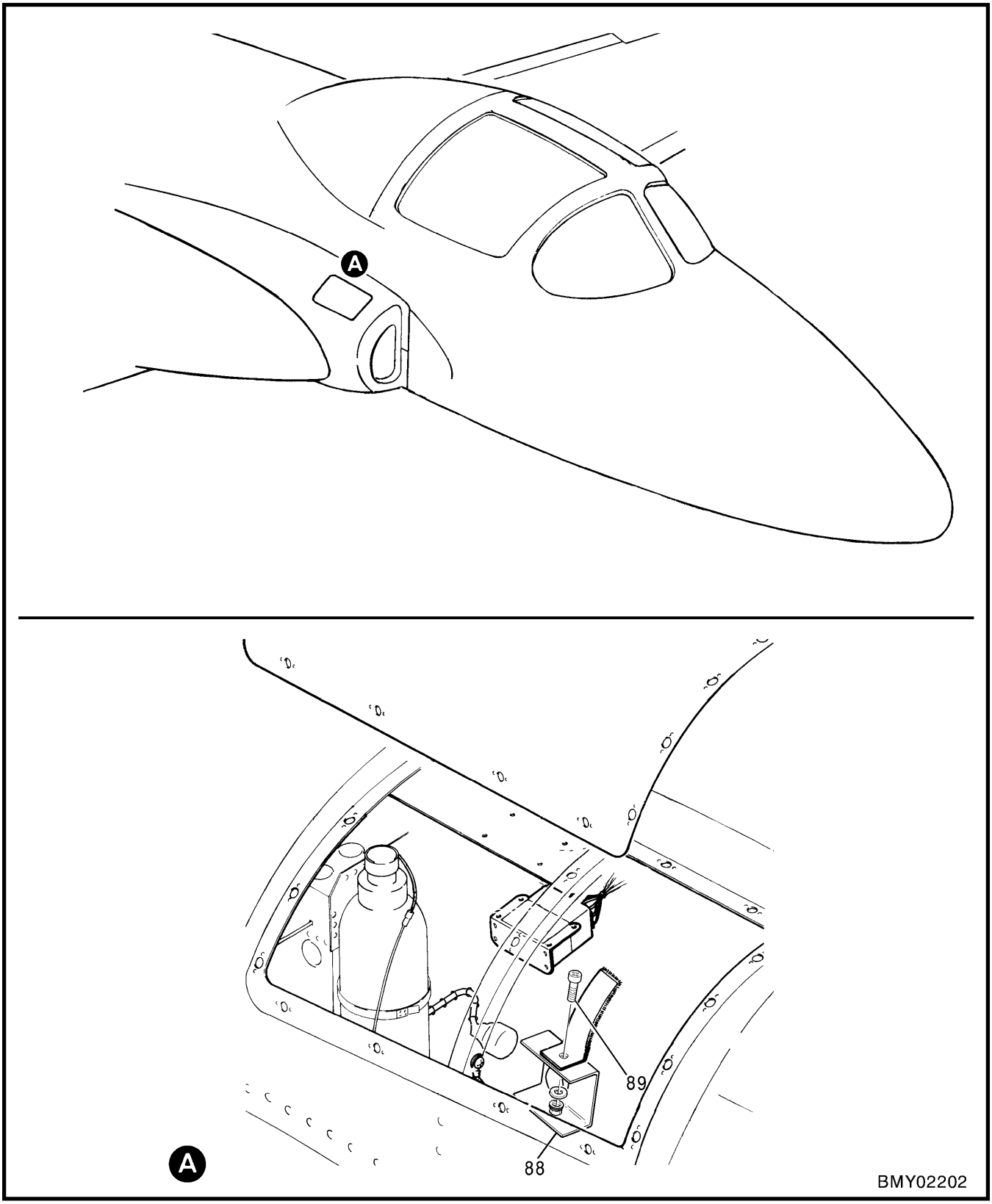

Figure 2-3-6 (Sheet 3 of 3) Centre Fuselage

FIGURE AND INDEX NUMBER	GROUP FUSELAGE MAJOR ASSEMBLY CENTRE FUSELAGE PART NUMBER	1 2 3 4 5 6 7 NOMENCLATURE	EFFEC-TIVITY	UNITS PER ASSY
2-3-6 -50	NAS464-4A8	..BOLT		6
-51	NAS464-4A9	..BOLT		6
	AN960PD416L	..WASHER - (UNDER BOLT HEAD)		12
-52	2935-04	..BASE - (V72962)		12
	52LH2935-048	..NUT - (V72962)		12
-53	41A-35044-60	..ANGLE - (FORWARD)		1
-54	AN4-13A	..BOLT		4
	AN960PD416	..WASHER		4
-55	41A-35062-1	..BOOM - FS 257 MAIN SPAR RH (FORWARD)		1
-56	NAS6204-18	..BOLT		8
	AN960D416	..WASHER		8
	MS21042L4	..NUT		8
-57	41A-35062	..BOOM - FS 257 MAIN SPAR LH (REAR)		1
-58	41A-10030-4	..BUSHING		4
-59	NAS464P7-62	..BOLT		4
	AN960PD716	..WASHER		8
	AN320-7	..NUT		4
	MS24665-306	..COTTER PIN		4
-60	FCB20441	..FITTING - (V83624) (FUEL CELL KEYHOLE)		12
	FCC20458	..PIN ASSY - (V83624) (FUEL CELL HANGER)		12
	FCB20104	...PLATE - (V83624)		1
	FCB20459	...PIN - (V83624)		1
	MS29513-12	...O-RING		1
	AN960D516	...WASHER		1
	AN340DD516	...NUT		1
	AC356-518	...LOCK NUT - (V83624)		1
	41A-35046	.FIREWALL ASSY - FS 278		NP
-61	41A-35046-132	..CHANNEL		2
-62	41A-35046-134	..CHANNEL		2
-63	41A-35046-130	..DOOR - (I)		1
-64	NAS623-3-1	..SCREW		12
	41A-35047	.FRAME ASSY - FS 285 WING REAR SPAR ATTACHMENT		NP
	41A-35089	..FITTING ASSY - JACK LH		1
	41A-35089-1	..FITTING ASSY - JACK RH		1
-65	41A-35089-2	...FITTING - JACK LH		1
	41A-35089-3	...FITTING - JACK RH		1
-66	MS21209F8-20	...INSERT		1
-67	41A-35057	..FITTING - WING ATT LH (R)		1
	41A-35057-1	..FITTING - WING ATT RH (R)		1
-68	FCB20441	..FITTING - (V83624) (FUEL CELL KEYHOLE)		12
	FCC20458	..PIN ASSY - (V83624) (FUEL CELL HANGER)		12
	FCB20104	...PLATE - (V83624)		1
	FCB20459	...PIN - (V83624)		1
	MS29513-12	...O-RING		1
	AN960D516	...WASHER		1
	AN340DD516	...NUT		1
	AC356-518	...LOCK NUT - (V83624)		1
	41A-35166	.DUCT INSTL - ENGINE		NP
-69	41A-35166-2	..DUCT ASSY - ENGINE INTAKE LH (I)		1
	41A-35166-3	..DUCT ASSY - ENGINE INTAKE RH (I)		1
-70	41A-35165	..JUNCTION - ENGINE INTAKE DUCT	001-026	1
	41A-35196	..JUNCTION ASSY - ENGINE INTAKE DUCT	027-	1
-71	NAS333CPA4-5	..BOLT	001-026	8
	NAS333CPA4	..BOLT	027-	8
	52-1650-02	..NUT - (V72962)	001-026	8
	41A-35166-44	..FLUSH NUT	027-	8
-72	S4506	..SEAL - (V88308)		AR
-73	41A-35166-12	..RETAINER - SEAL		2
-74	QS200M140S	..CLAMP - (V08484)		2

FIGURE AND INDEX NUMBER	GROUP FUSELAGE MAJOR ASSEMBLY CENTRE FUSELAGE PART NUMBER		1 2 3 4 5 6 7 NOMENCLATURE	EFFEC-TIVITY	UNITS PER ASSY
2-3-6 -75	NAS1203-8		..BOLT	001-026	128
	NAS1203-7		..BOLT	027-	128
	AN960PD10		..WASHER		114
	MS21042L3		..NUT		114
	41A-35119-800		.DUCT INSTL - FS 257-277 FWD ENGINE		NP
-76	41A-35119-2		..DUCT ASSY - FWD ENGINE (R)		1
-77	41A-35119-4		...PANEL ASSY - DUCT ACCESS		1
-78	41A-35212-800		...STRAP ASSY - (V94581) (IAW C-12-114-000/CF-365)		2
-79	BLC3TA09S	*	...PIN - QUICK RELEASE		2
-80	NAS1201C10B10B	*	...CHAIN		2
-81	41A-35119-76		...COVER - DUCT		1
-82	NAS623-3-2		...SCREW		3
-83	41A-35119-80		..COVER ASSY - DUCT (I)		1
-84	41A-35144		.BRACKET - UPPER LONGERON STOP LH		1
	41A-35144-1		.BRACKET - UPPER LONGERON STOP RH		1
-85	NAS623-3-5		.SCREW		8
	AN960PD10		.WASHER		8
	MS21042L3		.NUT		8
	41A-35200		.SCOOP INSTL - HYDRAULIC HEAT EXCHANGER		NP
-86	41A-75274		..SCOOP - HYDRAULIC PUMP BYPASS HEAT EXCHANGER		1
-87	NAS1204-32		BOLT - (SEE FIG. 2-3-2)		REF
R	NW4528468-1		PLUG INSTL - ICE-DETECTOR AIR INTAKE DUCT		NP
R -88	NW4528471-1	**	.BRACKET ASSY		2
R -89	NAS623-4-3	**	.SCREW		1
R	AN960C416L	**	.WASHER		1
R	MS21060L4	**	.NUT - LOCKING PLATE		1
			-000-		
		*	IAW C-12-114-000/CF-439		
R		**	IAW C-12-114-000/CF-514		

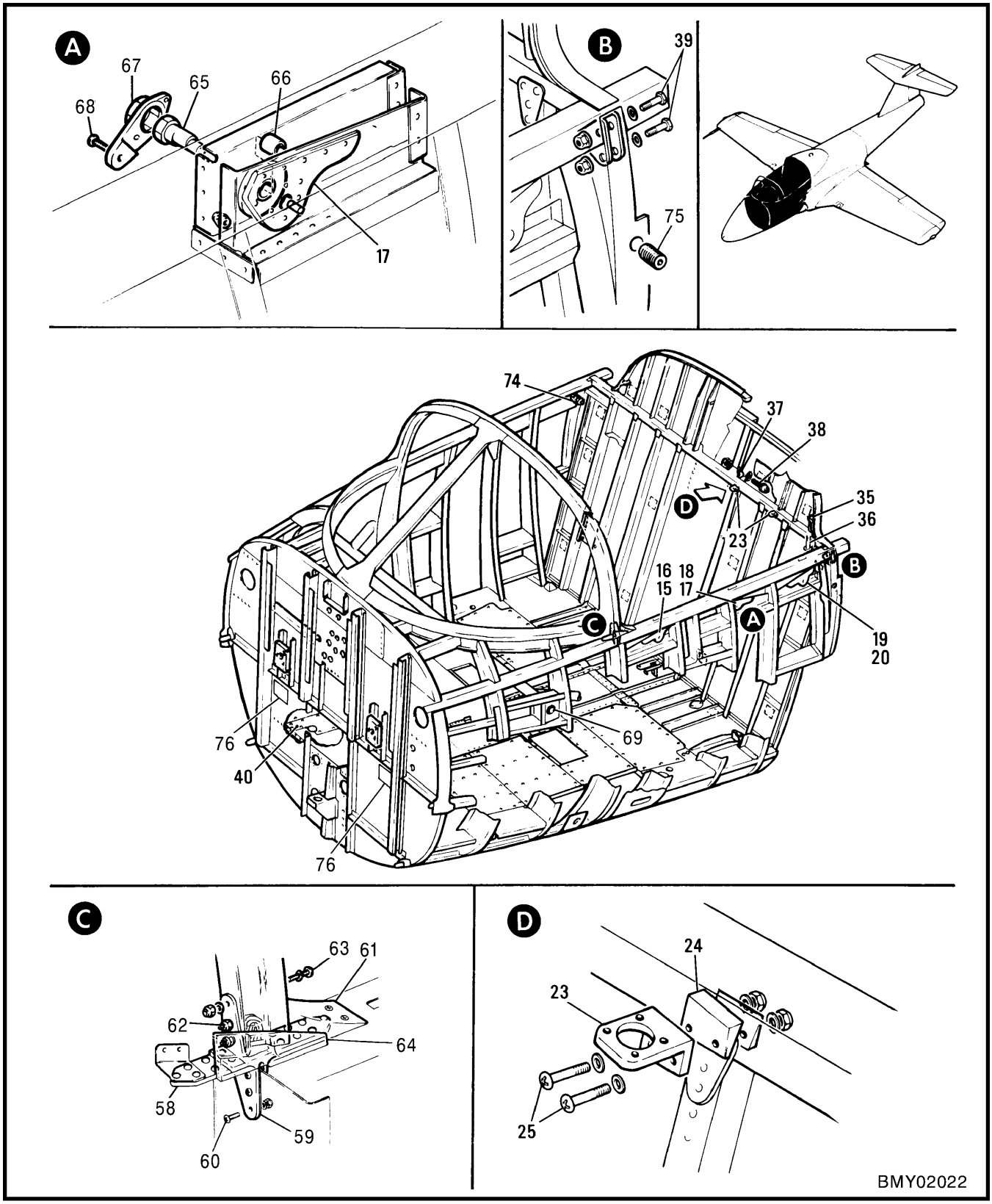

Figure 2-3-7 (Sheet 1 of 2) Cockpit Structure & Floor

FIGURE AND INDEX NUMBER	GROUP FUSELAGE MAJOR ASSEMBLY COCKPIT STRUCTURE & FLOOR PART NUMBER		1 2 3 4 5 6 7 NOMENCLATURE	EFFEC-TIVITY	UNITS PER ASSY
2-3-7 -	41A-35007		COCKPIT GENL ASSY - FUSELAGE (SEE FIG. 2-3-2)		NP
	41A-35071		.KEEL STRUCTURE INSTL - COCKPIT		NP
	41A-35071-2		..KEEL STRUCTURE ASSY - COCKPIT LH		1
	41A-35071-4		..KEEL STRUCTURE ASSY - COCKPIT RH		1
- 1	41A-35071-32		...HALF HINGE - (PORT)		1
- 2	214-16D		...RECEPTACLE - (V71286) (PORT)		3
- 3	214-16D		...RECEPTACLE - (V71286) (STBD)		17
- 4	41A-35071-110		..BRACKET - RIG PIN		1
- 5	NAS623-3-2		..SCREW		2
	AN960PD10		..WASHER		2
	MS21042L3		..NUT		2
- 6	AN743-13		..CLAMP		8
	41A-35029		.BULKHEAD ASSY - FS 149 PRESSURE		1
	41A-35029-4		..BULKHEAD ASSY - LOWER PORTION		1
- 7	41A-35029-98		...CHANNEL		1
- 8	MS27037-1-09		...SCREW		2
	AN960PD10L		...WASHER		2
	MS21042L3		...NUT		2
- 9	214-16D		...RECEPTACLE - (V71286)		13
	41A-35029-170	*	..BRACKET ASSY		2
-10	41A-35029-172	*	...BRACKET		1
-11	NAS43DD3-14		...SPACER		1
-12	NAS43DD3-24		...SPACER		2
-13	MS27039-1-14	*	..SCREW		1
-14	MS27039-1-16		..SCREW		2
	AN960PD10	*	..WASHER		3
	41A-35097-36		.INTERCOSTAL ASSY - FS 177-187 LH		1
	41A-35097-37		.INTERCOSTAL ASSY - FS 177-187 RH		1
-15	41A-30056		..BEARING - CANOPY ROLLER		1
-16	41A-30055		..BEARING - CANOPY ROLLER LH		1
	41A-30055-1		..BEARING - CANOPY ROLLER RH		1
	41A-35097-32		.INTERCOSTAL ASSY - FS 196-206 LH		1
	41A-35097-33		.INTERCOSTAL ASSY - FS 196-206 RH		1
-17	41A-30056		..BEARING - CANOPY ROLLER		1
-18	41A-30061		..BEARING - CANOPY ROLLER LH		1
	41A-30061-1		..BEARING - CANOPY ROLLER RH		1
	41A-35097-28		.INTERCOSTAL ASSY - FS 206-215 LH		1
	41A-35097-29		.INTERCOSTAL ASSY - FS 206-215 RH		1
-19	41A-30056		..BEARING - CANOPY ROLLER		1
-20	41A-30055		..BEARING - CANOPY ROLLER LH		1
	41A-30055-1		..BEARING - CANOPY ROLLER RH		1
	41A-35037		.BULKHEAD INSTL - REAR PRESSURE		NP
	41A-35037-2		..WEB ASSY - REAR PRESSURE BULKHEAD LOWER		1
-21	41A-35037-20		...WEB - LOWER		1
-22	214-16D		...RECEPTACLE - (V71286)		2
R -23	41A-35037-228		..BRACKET (MODIFIED IAW DRAWING NW4528200, SHEET 16 FOR DLIR/REWIRED A/C)	176-	2
R -24	41A-35037-236		..SHIM - FORWARD (REFER TO C-12-114-000/CF-546)	176-	2
R	41A-35037-232		..SHIM - REAR (REFER TO C-12-114-000/CF-546)	176-	2
-25	MS27039-1-16		..SCREW	176-	4
	AN960D10L		..WASHER	176-	8
	MS21042L3		..NUT	176-	4
-26	FCB20441		..FITTING - (V83624) (FUEL CELL KEYHOLE)		10
	FCC20458		..PIN ASSY - (83624) (FUEL CELL HANGER)		10
-27	FCB20104		...PLATE - (V83624)		1
-28	FCB20459		...PIN - (V83624)		1
		*	IAW C-12-114-000/CF-321		

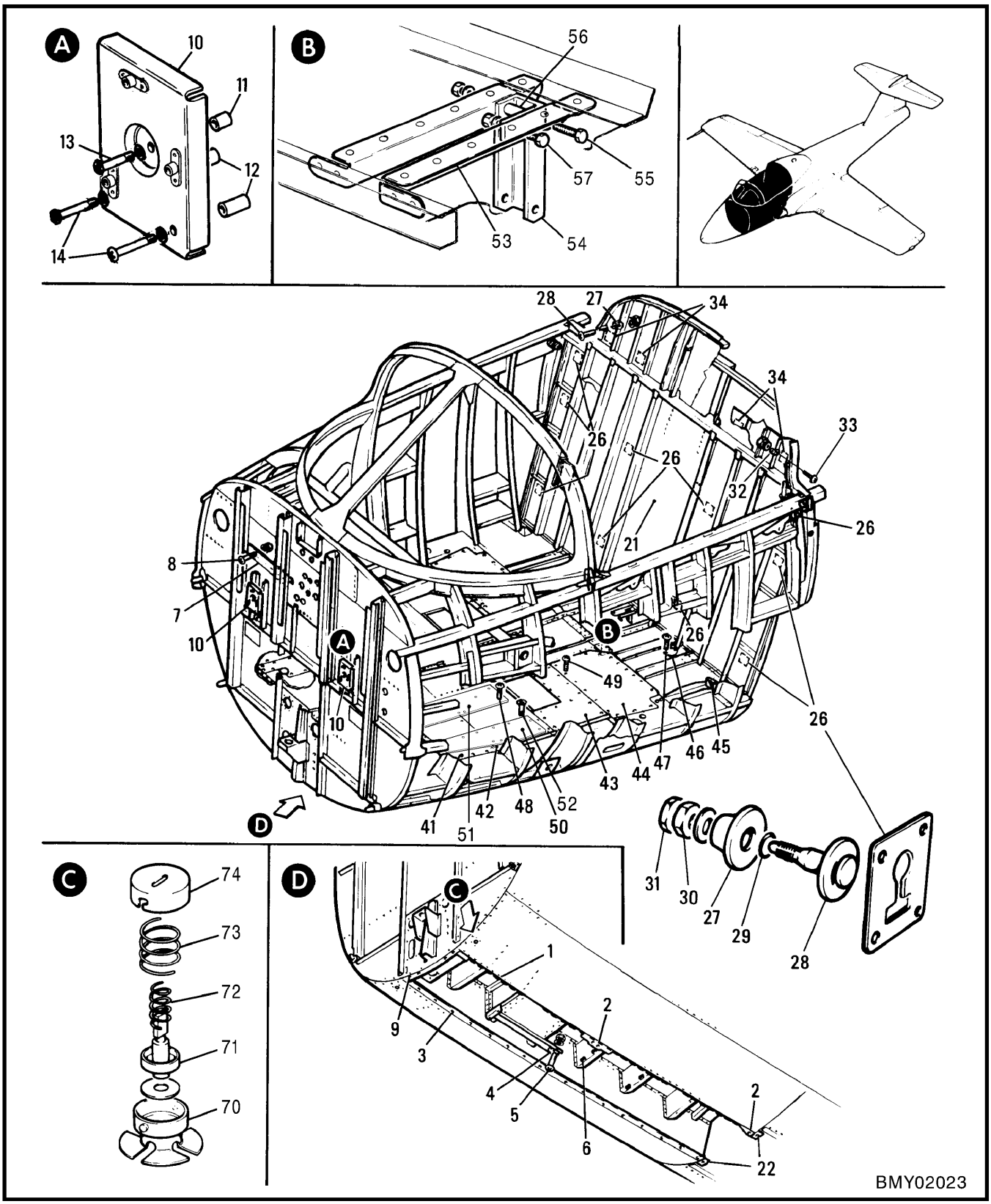

Figure 2-3-7 (Sheet 2 of 2) Cockpit Structure & Floor

FIGURE AND INDEX NUMBER	GROUP FUSELAGE MAJOR ASSEMBLY COCKPIT STRUCTURE & FLOOR PART NUMBER	1 2 3 4 5 6 7 NOMENCLATURE	EFFEC-TIVITY	UNITS PER ASSY
2-3-7 -29	MS29513-12	...O-RING		1
	AN960D516	...WASHER		1
-30	MS35649-2314	...NUT		1
-31	AC356-518	...LOCK NUT - (V83624)		1
	41A-35037-4	..WEB ASSY - REAR PRESSURE BULKHEAD UPPER		1
-32	AN743-12	...CLAMP		1
-33	MS27039-1-08	...SCREW		1
	AN960D10L	...WASHER		1
	MS21042L3	...NUT		1
-34	FCB20441	...FITTING - (V83624) (FUEL CELL KEYHOLE)		4
	FCC20458	...PIN ASSY - (V83624) (FUEL CELL HANGER)		4
	FCB20104	....PLATE - (V83624)		1
	FCB20459	....PIN - (V83624)		1
	MS29513-12	....O-RING		1
	AN960D516	....WASHER		1
	MS35649-2314	....NUT		1
	AC356-518	....LOCK NUT - (V83624)		1
-35	41A-35087	..BLOCK ASSY - PRESSURE BULKHEAD SEALING LH		1
	41A-35087-1	..BLOCK ASSY - PRESSURE BULKHEAD SEALING RH		1
-36	NAS221-12	..SCREW		2
-37	41A-35085	..FITTING - REAR PRESSURE BULKHEAD CONTROL BOX		2
-38	MS20004-10	..BOLT		4
	MS20002C4	..WASHER		4
	AN960PD416	..WASHER		4
	MS21042L4	..NUT		4
-39	NAS1103-5	..BOLT		2
	AN960D10	..WASHER		2
	MS21042L3	..NUT		2
	41A-35020	.FLOOR INSTL - COCKPIT		NP
-40	41A-35020-22	..PANEL - FLOOR (STBD) (I)		1
-41	41A-35020-8	..PANEL - FLOOR LH (I)		1
	41A-35020-9	..PANEL - FLOOR RH (I)		1
-42	41A-35020-10	..PANEL - FLOOR LH (I)		1
	41A-35020-11	..PANEL - FLOOR RH (I)		1
-43	41A-35020-12	..PANEL - FLOOR LH (I)		1
	41A-35020-13	..PANEL - FLOOR RH (I)		1
-44	41A-35020-14	..PANEL - FLOOR (PORT) (I)		1
	41A-35020-16	..PANEL - FLOOR (STBD) (I)		1
-45	41A-95219-10	..BRACKET ASSY - ANTI-G VALVE MOUNTING PORT		1
	41A-95219-12	..BRACKET ASSY - ANTI-G VALVE MOUNTING STBD		1
-46	41A-35020-88	..PLATE - COVER (PORT)		1
-47	MS35207-262	..SCREW - (COVER PLATE RETAINING)		2
-48	NAS6203-2	..BOLT - (INTERCHANGEABLE PANEL RETAINING)		57
-49	NAS6203-2	..BOLT - (INTERCHANGEABLE PANEL RETAINING)		92
-50	41A-35020-108	..HEEL PLATE - (LH)		1
	41A-35020-109	..HEEL PLATE - (RH)		1
-51	41A-35020-106	..HEEL PLATE - (LH)		1
	41A-35020-107	..HEEL PLATE - (RH)		1
R -52	MS24694S54	..SCREW		24
	41A-90452	.BRACKET INSTL - FLIGHT CONTROL RIGGING		NP
-53	41A-90452-2	..BRACKET - FLIGHT CONTROL RIGGING LH		1
	41A-90452-3	..BRACKET - FLIGHT CONTROL RIGGING RH		1
-54	41A-90452-4	..CHANNEL - FLIGHT CONTROL RIGGING BRACKET		1
-55	NAS1103-22	..BOLT		1
-56	NAS43DD3-64	..SPACER		1
-57	NAS1103-3	..BOLT		1
	AN960PD10	..WASHER		2
	MS21042L3	..NUT		2
-58	41A-35078	.FITTING - WINDSHIELD FORK ATTACHMENT LH		1
	41A-35078-1	.FITTING - WINDSHIELD FORK ATTACHMENT RH		1
-59	41A-35097-144	.SHIM - FORK FITTING		4

FIGURE AND INDEX NUMBER	GROUP FUSELAGE MAJOR ASSEMBLY COCKPIT STRUCTURE & FLOOR PART NUMBER		1 2 3 4 5 6 7 NOMENCLATURE	EFFEC-TIVITY	UNITS PER ASSY
2-3-7 -60	MS27039-1-16		.SCREW - (FITTING RETAINING)		8
	AN960PD10		.WASHER		8
	MS21042L3		.NUT		8
	HL2180-6-23		.PIN		2
	H14-3		.NUT		2
	NO NUMBER	*	.SPACER (MADE FROM BULK MATERIAL QQ-A-225/6)		2
-61	41A-35157		.BLOCK - WINDSHIELD CORNER LH		1
	41A-35157-1		.BLOCK - WINDSHIELD CORNER RH		1
-62	NAS623-3-24		.SCREW		2
-63	NAS623-3-26		.SCREW		2
	AN960PD10		.WASHER		4
	MS21042L3		.NUT		4
-64	41A-35146		.BLOCK - WINDSHIELD FRAME & UPPER LONGERON SEALING LH		1
	41A-35146-1		.BLOCK - WINDSHIELD FRAME & UPPER LONGERON SEALING RH		1
-65	41A-30058		.STUD - CANOPY ROLLER SPECIAL (FS 184, 198 & 212)		6
-66	41A-30057		.ROLLER ASSY - CANOPY LOCK		6
	41A-30057-2		..ROLLER - CANOPY LOCK		1
	41A-30057-4		..BUSHING - CANOPY LOCK ROLLER		1
-67	41A-30059		.PLATE ASSY - CANOPY ROLLER LOCK		6
-68	MS27039-1-11		.SCREW		6
-69	41A-35091-2		.TUBE ASSY - WELDED CROSS		1
	44-A17830		.VALVE ASSY - DRAIN		2
-70	44-A17834		..HOUSING - VALVE		1
-71	44-A17833		..PLUNGER - VALVE		1
	44-A17835		..WASHER - RUBBER		1
-72	44-A17831		..SPRING		1
-73	44-A17832		..SPRING		1
-74	44-A17836		..COVER - VALVE		1
-75	AN565A820H8		.SET SCREW - (HOISTING HOLE PLUG)		2
-76	8001		DECAL		1
			-000-		
		*	IAW C-12-114-000/CF-530		

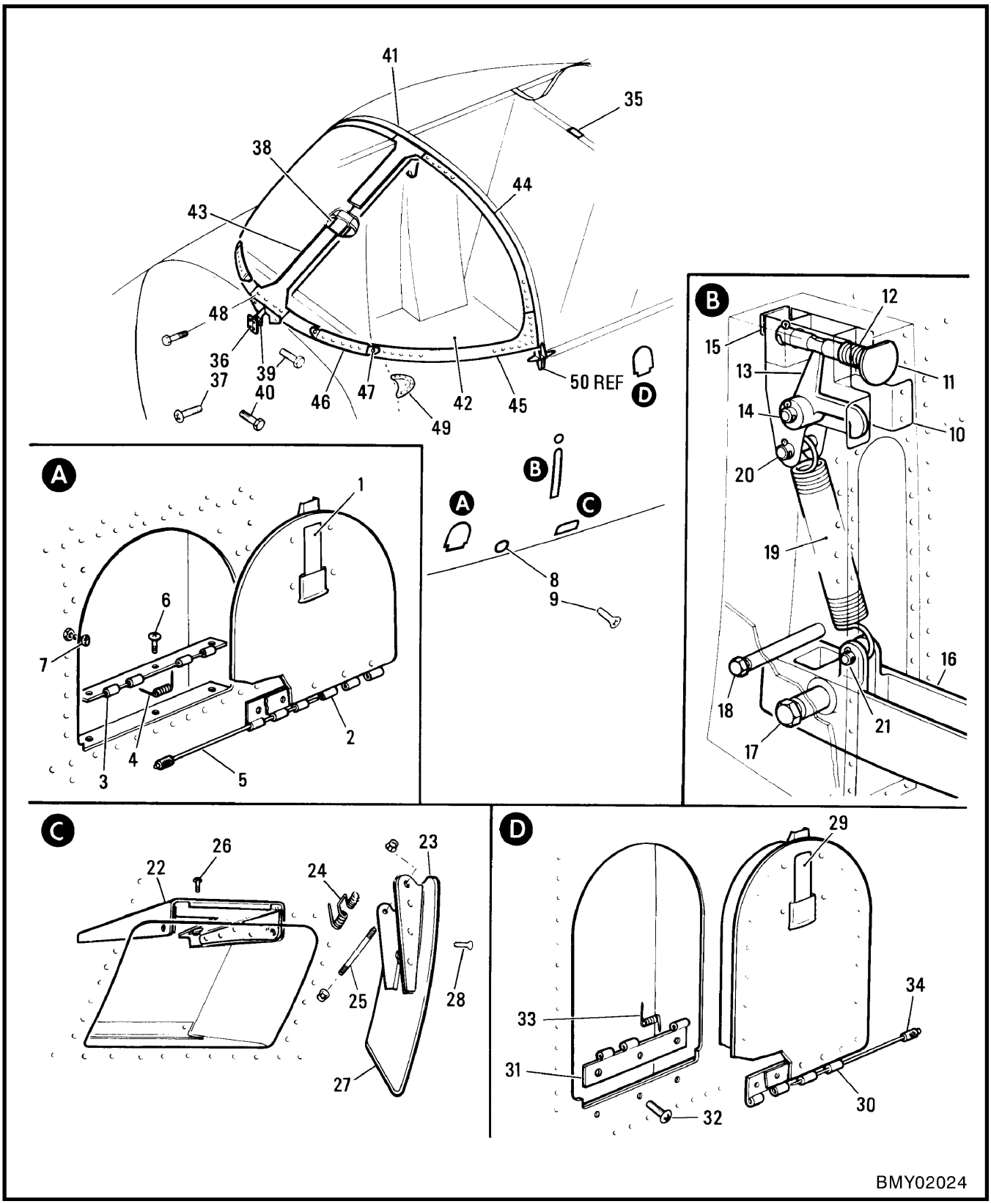

Figure 2-3-8 Cockpit Doors, Step & Windshield

FIGURE AND INDEX NUMBER	GROUP FUSELAGE MAJOR ASSEMBLY COCKPIT DOORS, STEP & WINDSHIELD PART NUMBER		1 2 3 4 5 6 7 NOMENCLATURE	EFFEC-TIVITY	UNITS PER ASSY
2-3-8 -	41A-35007		COCKPIT GENL ASSY - FUSELAGE (SEE FIG. 2-3-7)		REF
	41A-35007-42		.DOOR ASSY - CANOPY EMERGENCY JETTISON (INTERCHANGEABLE)		1
- 1	H5000-2-072-102		..LATCH ASSY - (V83014)		1
	41A-35007-54		..PACKING - HINGE		1
- 2	41A-35007-44		..HALF HINGE		1
- 3	41A-35007-46		.HALF HINGE		1
- 4	41-30122		.SPRING - DOOR HINGE		1
- 5	S1267-9-500		.PIN ASSY - (V88308)		1
- 6	NAS623-3-2		.SCREW - (HINGE RETAINING)		3
	AN960PD10		.WASHER		3
	MS21042L3		.NUT		3
- 7	MS27980-15N		.STUD		2
	22K2-02		.NUT - (V72962)		2
- 8	41A-35007-234		.DOOR ASSY - THROTTLE CONTROL (I)		1
- 9	NAS1202-3		.BOLT		8
	41A-35007-248		.LATCH ASSY - COCKPIT STEP LH		1
	41A-35007-249		.LATCH ASSY - COCKPIT STEP RH		1
-10	41A-35118-2		..BRACKET ASSY - LATCH LH		1
	41A-35118-3		..BRACKET ASSY - LATCH RH		1
-11	41A-30096		..BUTTON - COCKPIT STEP LATCH		1
-12	41-30097		..SPRING - STEP LATCH COMPRESSION		1
	MS24665-132		..COTTER PIN		1
-13	41A-30095		..LATCH - COCKPIT STEP		1
-14	MS20392-3C21		..PIN - (LATCH RETAINING)		1
	MS24665-132		..COTTER PIN		1
-15	41A-35007-310		.SHIM		AR
-16	41A-30086		.STEP - COCKPIT LH		1
	41A-30086-1		.STEP - COCKPIT RH		1
-17	41A-30099		.BOLT - COCKPIT STEP MOUNTING		2
	NAS43DD5-48		.SPACER		2
-18	AN4-25A		.BOLT - (COCKPIT STEP STOP)		2
	NAS43-4-129		.SPACER		2
	AN960PD416		.WASHER		4
	MS21042L4		.NUT		4
-19	41A-35164		.SPRING - COCKPIT STEP EXTENSION		2
-20	MS20392-2C21		.PIN - (SPRING RETAINING UPPER)		2
-21	MS20392-3C21		.PIN - (SPRING RETAINING LOWER)		2
	MS24665-132		.COTTER PIN		4
	41A-35007-52		.HINGE ASSY - COCKPIT LOWER STEP DOOR		2
-22	41A-35118-24	**	..BRACKET ASSY - HINGE		1
	41A-35118-28	**	...PLATE		2
-23	41A-35118-22	**	..BRACKET ASSY - HINGE		1
	41A-35118-26	**	...PLATE		2
-24	41-30102		..SPRING - COCKPIT STEP		1
-25	NO NUMBER	**	..PIN - HINGE		1
	MS21245-08	**	..NUT		2
-26	NAS623-2-1		.SCREW		8
-27	41A-35007-38		.DOOR ASSY - COCKPIT STEP LH (I)		1
	41A-35007-39		.DOOR ASSY - COCKPIT STEP RH (I)		1
-28	NAS1203-3		.BOLT		4
	K41A-92000-14	*	.DOOR ASSY - CANOPY HANDC RANK	001-010	1
	41A-35007-270		.DOOR ASSY - CANOPY HANDC RANK	011-	1
-29	H5000-2-072-102	*	..LATCH ASSY - (V83014)	001-010	1
	H5000-2-072-132		..LATCH ASSY - (V83014)	011-	1
R		*	IAW C-12-114-000/CF-361 AND C-12-114-000/CF-475		
		**	IAW C-12-114-000/CF-399		

FIGURE AND INDEX NUMBER	GROUP FUSELAGE MAJOR ASSEMBLY COCKPIT DOORS, STEP & WINDSHIELD PART NUMBER		1 2 3 4 5 6 7 NOMENCLATURE	EFFEC-TIVITY	UNITS PER ASSY
2-3-8 -30	K41A-92000-8	*	..HALF HINGE	001-010	1
	41A-35007-294		..HALF HINGE	011-	1
	K41A-92000-16	*	..PACKING	001-010	1
	41A-35007-292		..PACKING	011-	1
-31	K41A-92000-6	*	.HALF HINGE	001-010	1
	41A-35007-296		.HALF HINGE	011-	1
-32	MS27039-0809	*	.SCREW	001-010	1
	NAS1202-3		.SCREW	011-	3
	AN960PD8L		.WASHER		3
	MS21042L08		.NUT	011-	3
-33	S1427	*	.SPRING - (V88308)	001-010	1
	S1440		.SPRING - (V88308)	011-	1
-34	S1267-9-444	*	.PIN ASSY - (V88308)	001-010	1
	S1267-9-440		.PIN ASSY - (V88308)	011-	1
-35	S1125		.NAMEPLATE - (V88308)		1
	K41A-35008-802	**	.WINDSHIELD STRUCTURE INSTL - COCKPIT		NP
-36	41A-35123-22		..BRACKET - LH		1
	41A-35123-23		..BRACKET - RH		1
-37	NAS623-3-4		..SCREW		4
	AN960PD10		..WASHER		4
	MS21042L3		..NUT		4
-38	41A-35133		..POST - WINDSHIELD CENTRE		1
-39	NAS1105-6		..BOLT		1
	AN960PD516		..WASHER		1
	MS21042L5		..NUT		1
-40	NAS6204-6		..BOLT		1
	AN960PD416		..WASHER		1
	MS21042L4		..NUT		1
-41	41A-35123-2		..FRAME ASSY - WINDSHIELD		1
-42	41A-30203	**	..GLAZING ASSY - WINDSHIELD LH (I)	A	1
	370-403-00	***	..GLAZING ASSY - WINDSHIELD LH (VF0360)		1
	41A-30203-1	**	..GLAZING ASSY - WINDSHIELD RH (I)	A	1
	370-403-00-1	***	..GLAZING ASSY - WINDSHIELD RH (VF0360)		1
-43	K41A-35008-18	**	..STRIP - RETAINER	A	1
	41A-35006-8	***	..STRIP - RETAINER		1
-44	K41A-35008-20	**	..STRIP - RETAINER LH	A	1
	41A-35006-6	***	..STRIP - RETAINER LH		1
	K41A-35008-21	**	..STRIP - RETAINER RH	A	1
	41A-35006-7	***	..STRIP - RETAINER RH		1
-45	K41A-35008-16	**	..STRIP - RETAINER LH	A	1
	41A-35006-4	***	..STRIP - RETAINER LH		1
	K41A-35008-17	**	..STRIP - RETAINER RH	A	1
	41A-35006-5	***	..STRIP - RETAINER RH		1
-46	K41A-35008-40	**	..HEATSHIELD ASSY - WINDSHIELD	A	2
	41A-80202-4	***	..HEATSHIELD ASSY - WINDSHIELD (LH)		1
	41A-80202-5	***	..HEATSHIELD ASSY - WINDSHIELD (RH)		1
-47	NAS1003-14A	**	..SCREW	A	140
	MS24694-C57	***	..SCREW		132
		*	IAW C-12-114-000/CF-361		
		**	IAW C-12-114-000/CF-449		
		***	IAW C-12-114-000/CF-512		
		A	AIRCRAFT WITHOUT C-12-114-000/CF-512 EMBODIED		

FIGURE AND INDEX NUMBER	GROUP FUSELAGE MAJOR ASSEMBLY COCKPIT DOORS, STEP & WINDSHIELD PART NUMBER		1 2 3 4 5 6 7 NOMENCLATURE	EFFEC-TIVITY	UNITS PER ASSY
2-3-8 -48	NAS1003-12A	**	..SCREW	A	6
	MS24694-C55	***	..SCREW		2
	AN960PD10	**	..WASHER	A	96
	AN960PD10	***	..WASHER		134
	AN960PD10L	**	..WASHER	A	146
	MS21043-3	**	..NUT	A	96
	MS21043-3	***	..NUT		134
-49	41A-35177	*	..SCOOP ASSY - RAM AIR (PORT)		1
	41A-35177-1	*	..SCOOP ASSY - RAM AIR (STBD)		1
-50	41A-35078		FITTING - WINDSHIELD FORK ATTACHMENT (SEE FIG. 2-3-7)		REF
			-000-		
		*	IAW C-12-114-000/CF-401		
		**	IAW C-12-114-000/CF-449		
		***	IAW C-12-114-000/CF-512		
		A	AIRCRAFT WITHOUT C-12-114-000/CF-512 EMBODIED		

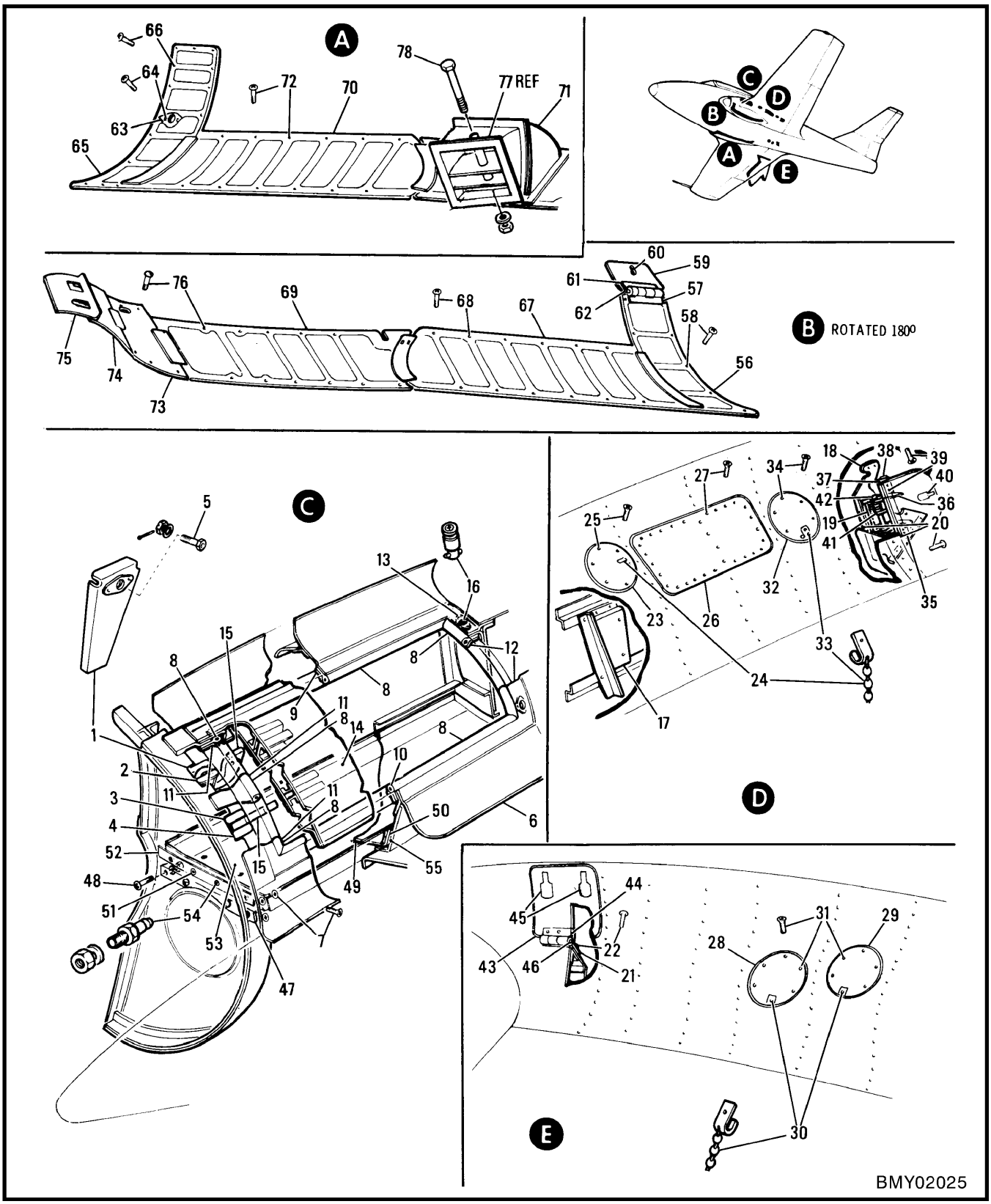

Figure 2-3-9 Fuselage To Wing Fairings

FIGURE AND INDEX NUMBER	GROUP FUSELAGE MAJOR ASSEMBLY FUSELAGE TO WING FAIRINGS PART NUMBER	1 2 3 4 5 6 7 NOMENCLATURE	EFFEC-TIVITY	UNITS PER ASSY
2-3-9 -	41A-35160-804	FAIRING INSTL - FUSELAGE TO WING UPPER LH (FS 229-308) (R) (SEE FIG. 2-3-5)		NP
	41A-35160-805	FAIRING INSTL - FUSELAGE TO WING UPPER RH (FS 229-308) (R)		NP
	41A-35159	.FRAME INSTL - FS 229 FAIRING LH		NP
	41A-35159-1	.FRAME INSTL - FS 229 FAIRING RH		NP
- 1	41A-35159-36	..BRACKET - LH (DOOR HINGE)		1
	41A-35159-37	..BRACKET - RH (DOOR HINGE)		1
- 2	41A-35159-38	..BRACKET - LH (DOOR HINGE)		1
	41A-35159-39	..BRACKET - RH (DOOR HINGE)		1
- 3	41A-35159-40	..BRACKET - LH (DOOR HINGE)		1
	41A-35159-41	..BRACKET - RH (DOOR HINGE)		1
- 4	41A-35159-42	..BRACKET - LH (DOOR HINGE)		1
	41A-35159-43	..BRACKET - RH (DOOR HINGE)		1
- 5	NAS1103-9D	..BOLT	051-	2
		OR		
	AN3-10	..BOLT	051-	
	AN960C10	..WASHER - (AS REQUIRED WITH AN3-10 BOLT)	051-	2
	AN320-3	..NUT	051-	2
		OR		
	AN310-3	..NUT	051-	
	MS24665-153	..COTTER PIN	051-	2
- 6	41A-35160-194	.SKIN - FAIRING LOWER LH (FOR SPARES ORDER 41A-35160-414)		1
	41A-35160-414	.SKIN - FAIRING LOWER LH (SPARE FOR 41A-35160-194)		
	41A-35160-195	.SKIN - FAIRING LOWER RH (FOR SPARES ORDER 41A-35160-415)		1
	41A-35160-415	.SKIN - FAIRING LOWER RH (SPARE FOR 41A-35160-195)		
- 7	NAS1203-3	.BOLT		7
	A3235-020-24A	.WASHER - (V78533)		7
- 8	41A-35202	.SEAL - STOWAGE COMPARTME NT LH		1
	41A-35202-1	.SEAL - STOWAGE COMPARTME NT RH		1
- 9	41A-35160-210	.RETAINER - LH (UPPER SEAL)		1
	41A-35160-211	.RETAINER - RH (UPPER SEAL)		1
-10	41A-35160-206	.RETAINER - LH (LOWER SEAL)		1
	41A-35160-207	.RETAINER - RH (LOWER SEAL)		1
-11	41A-35160-376	.RETAINER - LH (FORWARD SEAL)		1
	41A-35160-377	.RETAINER - RH (FORWARD SEAL)		1
-12	41A-35160-378	.RETAINER - LH (REAR SEAL)		1
	41A-35160-379	.RETAINER - RH (REAR SEAL)		1
-13	244-16C	.RECEPTACLE - (V71286)		3
-14	41A-35160-372	.DOOR ASSY - STOWAGE LH (REPLACEABLE)		1
	41A-35160-373	.DOOR ASSY - STOWAGE RH (REPLACEABLE)		1
-15	41A-35160-370	..HOOK - (DOOR HINGE)		2
-16	4002-7	..STUD - (V71286)		3
		OR		
	4002-9	..STUD - (V71286)		
	4002H	..GROMMET - (V71286)		3
	R4G	..SNAP RING - (V71286)		3
-17	41A-35160-190	.MOUNTING - (FLAP SELECTOR VALVE LH)		1
	41A-35192	.BRACKET INSTL - GROUND POWER DISCONNECT & DOOR HINGE (LH)		NP
-18	41A-35192-8	..BRACKET - (RECEPTACLE MOUNTING)	001-120	1
	41A-35192-16	..BRACKET - (RECEPTACLE MOUNTING)	121-	1
-19	41A-35192-20	..BRACKET ASSY - HINGE (WELDED)		1
	41A-35192-14	..SHIM - HINGE BRACKET		1
-20	NAS623-3-6	..SCREW - (DOOR HINGE RETAINING)		3
	AN960-10L	..WASHER		3
-21	41A-35160-344	.HALF HINGE - (ACCESS DOOR RH)		1
-22	NAS623-3-2	.SCREW - (HINGE RETAINING RH)		1

FIGURE AND INDEX NUMBER	GROUP FUSELAGE MAJOR ASSEMBLY FUSELAGE TO WING FAIRINGS PART NUMBER	1 2 3 4 5 6 7 NOMENCLATURE	EFFEC-TIVITY	UNITS PER ASSY
2-3-9 -23	41A-35160-266	.DOOR ASSY - MAIN SPAR BOLT ACCESS LH (I)		1
	41A-35160-267	.DOOR ASSY - MAIN SPAR BOLT ACCESS RH (I)		1
-24	NAS1201C6-10	.CHAIN		1
-25	NAS1203-2	.BOLT		6
-26	41A-35160-348	.DOOR - FLAP FOLLOW UP MECH ACCESS LH (I)		1
-27	NAS1203-2	.BOLT		31
-28	41A-35160-263	.DOOR ASSY - HYDRAULIC LINE ACCESS RH (I)		1
-29	41A-35160-265	.DOOR ASSY - ELECTRICAL ACCESS RH (I)		1
-30	NAS1201C6-10	.CHAIN - (RH)		2
-31	NAS1203-2	.BOLT - (DOOR RETAINING RH)		12
-32	41A-35160-260	.DOOR ASSY - HYDRAULIC LINE & XMTR ACCESS LH (I)		1
	41A-35160-261	.DOOR ASSY - HYDRAULIC LINE ACCESS RH (I)		1
-33	NAS1201C6-10	.CHAIN		1
-34	NAS1203-2	.BOLT - (DOOR RETAINING)		6
	41A-35160-278	.DOOR ASSY - EXTERNAL POWER ACCESS LH (I)		1
-35	41A-35160-280	..DOOR - EXTERNAL POWER ACCESS LH		1
-36	41A-35160-282	..BRACKET - HINGE		1
-37	41A-35160-340	..SEAL - DOOR		1
-38	41A-35160-342	..RETAINER - DOOR SEAL		1
-39	NAS1202-4	..BOLT		5
	AN960PD8	..WASHER		5
	MS21043-08	..NUT		5
-40	H5000-2-091-091	..LATCH ASSY - (V83014)		1
-41	41A-35193	.SPRING - EXTERNAL POWER ACCESS DOOR TORSION (LH)		1
-42	MS20392-2C93	.PIN - (DOOR HINGE LH)		1
	AN960C10L	.WASHER - (LH)		1
	MS24665-132	.COTTER PIN - (LH)		1
	41A-35160-362	.DOOR ASSY - ENGINE MOUNT ACCESS RH (I)		1
-43	41A-35160-24	..DOOR - ENGINE MOUNT ACCESS RH		1
-44	41A-35160-168	..HALF HINGE - (ACCESS DOOR RH)		1
-45	H5000-2-064-064	..LATCH ASSY - (V83014)		2
-46	MS20253P2-300	.PIN - (DOOR HINGE RH)		1
	41A-41565	LINER INSTL - STOWAGE FAIRING (SEE FIG. 2-3-1)		NP
-47	NO NUMBER	.BRACKET - LINER SUPPORT (LH & RH) (IAW C-12-114-000/CF-235)		2
-48	MS35206-245	.SCREW		8
	AN960-8	.WASHER		8
	MS21042L08	.NUT		8
-49	41A-41565-2	.LINER ASSY - LH (FAIRING STOWAGE) (MOD)		1
	41A-41565-3	.LINER ASSY - RH (FAIRING STOWAGE) (MOD)		1
-50	80	..VELCRO - (V12288) (PILE 1 IN. WIDE)		AR
-51	XX16205K1105	..SOCKET - (V09736)		4
-52	BS16506K1105	..PLATE - (V09736)		4
-53	MS20230A10	..GROMMET		2
-54	XX16362-0808K110	.BUTTON - (V09736)		8
	AN960C8L	.WASHER		8
	MS21042L08	.NUT		8
-55	80	.VELCRO - (V12288) (HOOK 1 IN. WIDE)		AR
	41A-35161	FAIRING INSTL - FUSELAGE TO WING LOWER LH (SEE FIG. 1)		NP
	41A-35161-1	FAIRING INSTL - FUSELAGE TO WING LOWER RH		NP
	41A-35161-4	.DOOR ASSY - (FS 292 TO FORWARD SPAR LH) (I)		1
-56	41A-35161-30	..PANEL - DOOR		1
-57	41A-35161-22	..HALF HINGE		1

FIGURE AND INDEX NUMBER	GROUP FUSELAGE MAJOR ASSEMBLY FUSELAGE TO WING FAIRINGS PART NUMBER		1 2 3 4 5 6 7 NOMENCLATURE	EFFEC-TIVITY	UNITS PER ASSY
2-3-9 -	41A-35161-10		.BUTTSTRAP ASSY - (WING FORWARD SPAR LH) (I)		1
-58	NAS623-3-3		.SCREW - (DOOR RETAINING)		11
	41A-35161-8		.DOOR ASSY - (FS 292 TO FORWARD SPAR LH) (I)		1
-59	41A-35161-36		..PANEL - DOOR		1
-60	H5000-2-156-125		..LATCH ASSY - (V83014)		1
	S1246LS7-8-062		..WASHER - (V88308)		4
-61	41A-35161-20		..HALF HINGE		1
-62	S1267-9-400		.PIN ASSY - (V88308) (LH)		1
	41A-35161-6		.DOOR ASSY - (FS 292 TO FORWARD SPAR RH) (I)	001-050	1
	41A-35161-32		..PANEL - DOOR	001-050	1
-63	41A-35161-38		..COVER - (PITOT STATIC DRAIN)	001-050	1
-64	NAS623-3-3		..SCREW	001-050	2
	41A-35161-11		.BUTTSTRAP ASSY - (WING FORWARD SPAR RH) (I)		1
-65	41A-35161-40		.DOOR - (FS 292 TO FWD SPAR RH) (I)	051-	1
-66	NAS623-3-3		.SCREW - (DOOR RETAINING)		16
-67	41A-35161-80		.DOOR ASSY - LH (FWD TO MAIN SPAR) (I)		1
	41A-35161-28		..DOOR - (LH)		1
	41A-43014-92		..PAD - (RUBBER)		1
	NO NUMBER		..RUBBER SHEET (MADE FROM MIL-STD-417) (DIMENSION 8 X 19.25) (IAW C-12-114-000/CF-528)		1
	41A-35161-29		.DOOR - RH (FORWARD TO MAIN SPAR) (I)		1
	41A-35161-12		.BUTTSTRAP ASSY - LH (WING MAIN SPAR) (I)		1
	41A-35161-13		.BUTTSTRAP ASSY - RH (WING MAIN SPAR) (I)		1
-68	NAS623-3-3		.SCREW - (DOOR RETAINING)		19
	AN960PD10L		.WASHER		19
-69	41A-35170-8		.DOOR - (MAIN TO REAR SPAR LH) (I)		1
	41A-35170-16		.DOOR ASSY - (MAIN TO REAR SPAR RH) (I)		1
-70	41A-35170-10		..PANEL - DOOR (RH)		1
	41A-96202-2		..DUCT INSTL - HEAT EXCHANGER COOLING AIR (RH)		NP
-71	41A-96202-46		...DUCT ASSY - HEAT EXCHANGER (RH)		1
	41A-35170-22		.BUTTSTRAP ASSY - (WING REAR SPAR LH) (I)		1
	41A-35170-23		.BUTTSTRAP ASSY - (WING REAR SPAR RH) (I)		1
-72	NAS623-3-3		.SCREW - (DOOR RETAINING)		18
	AN960PD10L		.WASHER		18
-73	41A-35170-12		.DOOR - LH (REAR SPAR TO SHROUD STRINGER) (INTERCHANGEABLE)		1
	41A-35170-13		.DOOR - RH (REAR SPAR TO SHROUD STRINGER) (INTERCHANGEABLE)		1
	41A-35170-18		.DOOR ASSY - LH (SHROUD STRINGER TO FS 300) (I)	001-050	1
	41A-35170-19		.DOOR ASSY - RH (SHROUD STRINGER TO FS 300) (I)	001-050	1
-74	41A-35170-24		.DOOR ASSY - LH (SHROUD STRINGER) (I)	051-	1
	41A-35170-25		.DOOR ASSY - RH (SHROUD STRINGER) (I)	051-	1
-75	41A-35170-28		.DOOR - LH (FS 300) (I)	051-	1
	41A-35170-29		.DOOR - RH (FS 300) (I)	051-	1
	MS27039-1-08		.SCREW	001-050	20
	AN960PD10L		.WASHER	001-050	20
-76	MS27039-1-08		.SCREW	051-	23
	AN960PD10L		.WASHER	051-	23
-77	41A-96202		DUCT ASSY - HEAT EXCHANGER COOLING AIR (SEE FIG. 2-3-6)		REF
-78	AN4-30A	*	.BOLT		1
	COMM	*	.TUBING - AL 5/16X.028X3, 24ST.HA7CG42T3		1
	AN960D4016L	*	.WASHER		1
	MS21042L4	*	.NUT		1
			-000-		
		*	IAW C-12-114-000/CF-340		

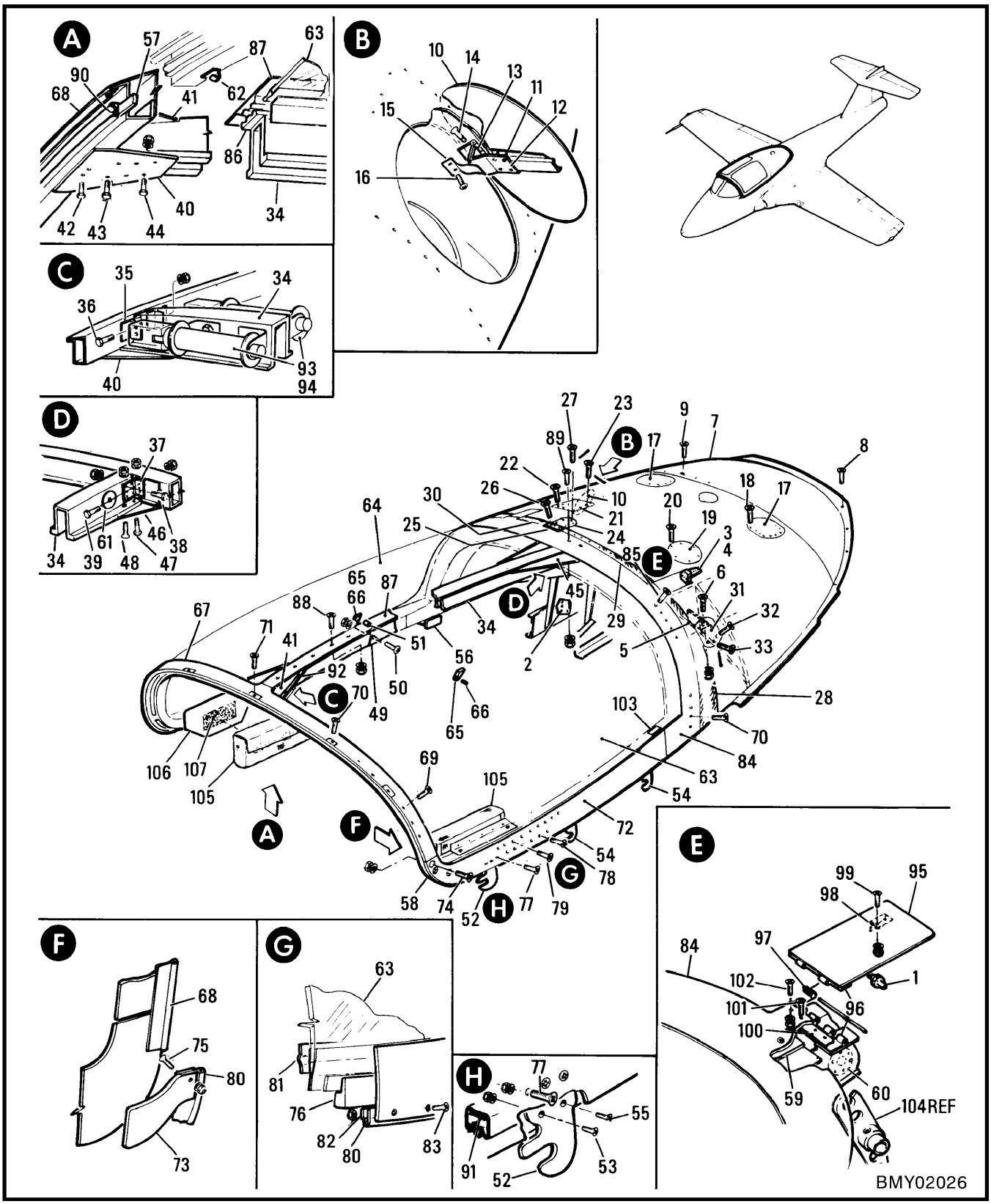

Figure 2-3-10 Canopy & Fairing

FIGURE AND INDEX NUMBER	GROUP FUSELAGE MAJOR ASSEMBLY CANOPY & FAIRING PART NUMBER	1 2 3 4 5 6 7 NOMENCLATURE	EFFEC-TIVITY	UNITS PER ASSY
2-3-10 -	41A-35031	FAIRING INSTL - CANOPY (SEE FIG. 2-3-5)		NP
	41A-35055	.FAIRING STRUCTURE ASSY - (CANOPY)		1
- 1	41A-30173	..STUD - CANOPY HINGE DOOR		2
	AN960D10L	..WASHER		2
	MS21042L3	..NUT		2
- 2	41A-35055-74	..PLATE - BEARING (FS 230 BL 3RH)		1
	41A-35055-116	..PLATE - BEARING (FS 230 BL 6RH)		1
- 3	41A-35055-128	.ANGLE		1
- 4	41A-35031-950	.STRIP - RUBBING		1
	41A-35055-146	..ANGLE		1
- 5	41A-35053	.FITTING - FS 235 LH		1
	41A-35053-1	.FITTING - FS 235 RH		1
- 6	NAS623-3-14	.SCREW		8
	AN960PD10L	.WASHER		8
	MS21042L3	.NUT		8
- 7	41A-35031-2	.FAIRING ASSY - REAR		1
- 8	NAS333CPA5	.BOLT		28
- 9	NAS1203-2	.BOLT		15
	41A-35031-40	.DOOR ASSY - FUEL FILLER ACCESS		1
-10	41A-35031-34	..DOOR - FUEL FILLER ACCESS		1
-11	H5000-2-081-164	..LATCH ASSY - (V83014)		2
-12	41A-35077-4	..ARM - HINGE		1
-13	41A-35077-12	..HINGE		1
-14	NAS1203-2	.BOLT		3
-15	41A-35077-10	.SPRING		1
-16	MS35206-229	.SCREW		2
-17	41A-35031-102	.DOOR - FUEL VENT ACCESS		2
-18	MS24693-272	.SCREW		12
-19	41A-35031-106	.DOOR - FUEL VENT ACCESS		1
-20	MS24693-272	.SCREW		8
-21	41A-35031-36	.DOOR - PRESSURE REGULATOR VALVE ACCESS		1
-22	MS24693-272	.SCREW		9
-23	S1439-1032-14	.SCREW - (V88308)		1
	MS24665-132	.COTTER PIN		1
	41A-35031-128	.DOOR ASSY - CANOPY LOCK MECHANISM ACCESS		1
-24	41A-35031-32	..DOOR - ACCESS		1
-25	41A-35031-124	..STRIP - NYLATRON (.030 IN. THICK)		1
-26	MS24693-272	.SCREW		10
-27	S1439-1032-14	.SCREW - (V88308)		1
	MS24665-132	.COTTER PIN		1
-28	41A-35031-120	.STRIP - NYLATRON (.030 IN. THICK)		1
	41A-35031-121	.STRIP - NYLATRON (.030 IN. THICK)		1
-29	41A-35031-122	.STRIP - NYLATRON (.030 IN. THICK)		1
-30	41A-35031-126	.STRIP - NYLATRON (.030 IN. THICK)		1
-31	41A-35031-30	.DOOR - CANOPY TORQUE SHAFT ACCESS		1
-32	MS24693-272	.SCREW		4
-33	S1439-1032-14	.SCREW - (V88308)		1
	MS24665-132	.COTTER PIN		1
R	41A-35005-814	CANOPY ASSY - COCKPIT (SEE FIG. 2-3-2)		1
	41A-35122-800	.CANOPY STRUCTURE ASSY - (I) (COCKPIT)		1
-34	41A-35122-156	..BEAM		1
-35	41A-35122-72	..TEE - FWD BEAM SUPPORT		2
-36	NAS1003-3	..BOLT		4
	AN960D10L	..WASHER		4
	MS21043-3	..NUT		4
-37	41A-35122-48	..ANGLE - BEAM SUPPORT		1
	41A-35122-49	..ANGLE - BEAM SUPPORT		1

FIGURE AND INDEX NUMBER	GROUP FUSELAGE MAJOR ASSEMBLY CANOPY & FAIRING PART NUMBER	1 2 3 4 5 6 7 NOMENCLATURE	EFFEC-TIVITY	UNITS PER ASSY
2-3-10 -38	NAS1103-4	..BOLT		12
	AN960PD10L	..WASHER		12
	MS21042L3	..NUT		12
-39	NAS6204-4	..BOLT		6
	AN960D416L	..WASHER		6
	MS21042L4	..NUT		6
-40	41A-35122-60	..GUSSET - FORWARD LOWER		1
-41	41A-35122-62	..GUSSET - FORWARD UPPER		1
-42	NAS1003-6	..BOLT - (DEMIST FITTING)		2
-43	NAS1003-7	..BOLT - (DEMIST FITTING)		2
-44	NAS1003-3	..BOLT - (IN GUSSET)		4
	AN960D10L	..WASHER		8
	MS21043-3	..NUT		6
-45	41A-35122-54	..GUSSET - (REAR UPPER)		1
-46	41A-35122-154	..GUSSET - (REAR LOWER)		1
-47	NAS1103-5	..BOLT		2
-48	NAS1203-5	..BOLT		2
	AN960PD10L	..WASHER		4
	MS21042L3	..NUT		4
-49	41A-35122-148	..BRACKET - SPOTLIGHT SUPPORT		1
-50	NAS623-2-6	..SCREW		2
-51	NAS43DD3-16	..SPACER		2
	AN960D8L	..WASHER		2
	MS21042L08	..NUT		2
-52	41A-30091	..HOOK - (FORWARD PORT)		1
	41A-30091-1	..HOOK - (FORWARD STBD)		1
	41A-35122-92	..SHIM - (UNDER HOOK)		2
	41A-35005-106	..PLATE - FORWARD HOOK LH	026-	1
	41A-35005-107	..PLATE - FORWARD HOOK RH	026-	1
-53	NAS6204-7	..BOLT		2
	AN960D416L	..WASHER		2
	MS21042L4	..NUT		2
-54	41A-30114	..HOOK - PORT (CANOPY)		2
	41A-30114-1	..HOOK - STBD (CANOPY)		2
	41A-35005-108	..PLATE - CENTRE & REAR HOOK	026-	4
	41A-35122-94	..SHIM		4
-55	NAS623-3-7	..SCREW - (1 IN FWD HOOK)		10
	AN960D10L	..WASHER		10
	MS21042L3	..NUT		10
-56	41A-35122-115	..PAD - STRIKING RH		1
-57	41A-35122-88	..SPACER - (SEAL CHANNEL SUPPORT PORT)		1
	41A-35122-89	..SPACER - (SEAL CHANNEL SUPPORT STBD)		1
-58	41A-35122-90	..SPACER - (SEAL CHANNEL SUPPORT PORT)		1
	41A-35122-91	..SPACER - (SEAL CHANNEL SUPPORT STBD)		1
-59	41A-35122-96	..SPACER		2
-60	41A-35094	..PIN - HINGE		2
-61	41A-35122-68	..PLATE - BEARING		2
-62	41A-35122-100	..CLIP		1
-63	41A-35056-802	.GLAZING ASSY - CANOPY PORT (I)		1
-64	41A-35056-803	.GLAZING ASSY - CANOPY STBD (I)		1
-65	41A-35056-40	..HOOK - PLASTIC		2
-66	NAS561C812	..PIN		2
-67	41A-35005-4	.PLATE ASSY - (FWD ARCH)		1
-68	41A-35005-34	.SEAL		1
	41A-35005-20	.RETAINER - SEAL		1
-69	NAS560CK3P8	.SCREW		19
-70	NAS560CK3P9	.SCREW		20
-71	NAS560CK3P10	.SCREW		5

FIGURE AND INDEX NUMBER	GROUP FUSELAGE MAJOR ASSEMBLY CANOPY & FAIRING PART NUMBER	1 2 3 4 5 6 7 NOMENCLATURE	EFFEC-TIVITY	UNITS PER ASSY
2-3-10 -72	41A-35005-2	.PLATE - OUTER PORT		1
	41A-35005-3	.PLATE - OUTER STBD		1
-73	41A-35005-12	.PACKING - (FWD CORNER)		1
	41A-35005-13	.PACKING - (FWD CORNER)		1
	41A-35005-44	.PACKING - SEAL		1
	41A-35005-45	.PACKING - SEAL		1
	41A-35005-24	.SHIM - (FORWARD HOOK)		2
-74	NAS560CK3P7	.SCREW		6
	MS21042L3	.NUT		4
-75	NAS1202-6	.BOLT		2
	AN960D8L	.WASHER		2
	MS21042L08	.NUT		2
-76	41A-35005-38	.STRIP - CONTOUR PORT		1
	41A-35005-39	.STRIP - CONTOUR STBD		1
-77	NAS1203-12	.BOLT		22
-78	NAS560CK3P11	.SCREW		32
-79	NAS560CK3P10	.SCREW		46
-80	41A-35005-36	.SEAL - (MAKE FROM BULK MATERIAL S1333-3)		2
-81	41A-35005-114	.SEAL		2
-82	41A-35005-22	.RETAINER - SEAL PORT		1
	41A-35005-23	.RETAINER - SEAL STBD		1
-83	NAS1202-2	.BOLT		34
	MS21042L08	.NUT		34
-84	41A-35005-6	.PLATE - OUTER (REAR)		1
	41A-35005-14	.PACKING		1
	41A-35005-15	.PACKING		1
-85	NAS560CK3P8	.SCREW		25
-86	41A-35005-10	.RETAINER - INNER		1
-87	41A-35005-8	.RETAINER - OUTER		1
	41A-35005-16	.PACKING		1
-88	NAS560CK3P11	.SCREW		25
	AN960D10L	.WASHER		24
	MS21043-3	.NUT		24
-89	NAS1203-2	.BOLT - (REAR BRACKETS)		2
	AN960D10L	.WASHER		2
	MS21042L3	.NUT		2
-90	41A-30062	.SEAL - PRESSURE		1
-91	41A-35005-112	.SHIM - RUBBER (MAKE FROM BULK MATERIAL MIL-STD-417)		4
-92	41A-35005-116	.SEAL		2
R -93	TYPETLU146A	.TOOL & BRACKET ASSY - CANOPY BREAKER (CONVERTED FROM 1680-21-807-0587)		2
-94	AN3-4A	.BOLT		4
	AN960C10L	.WASHER		4
	MS21042L3	.NUT		4
	41A-35005-80	.DOOR ASSY - (LH HINGE COVER)		1
	41A-35005-81	.DOOR ASSY - (RH HINGE COVER)		1
-95	41A-35005-52	..DOOR - LH		1
	41A-35005-53	..DOOR - RH		1
	41A-35005-54	..PACKING - LH		1
	41A-35005-55	..PACKING - RH		1
-96	41A-35005-60	..HINGE ASSY		1
	41A-35005-61	..HINGE ASSY		1
-97	S1458	..SPRING - (V88308)		1
-98	41A-30174	..HOOK - CANOPY HINGE LH		1
	41A-30174-1	..HOOK - CANOPY HINGE RH		1
	41A-35005-58	..SHIM		AR
-99	NAS1202-3	..BOLT		2
	AN960D8L	..WASHER		2
	MS21042L08	..NUT		2

FIGURE AND INDEX NUMBER	GROUP FUSELAGE MAJOR ASSEMBLY CANOPY & FAIRING PART NUMBER		1 2 3 4 5 6 7 NOMENCLATURE	EFFEC-TIVITY	UNITS PER ASSY
2-3-10 -100	41A-35005-56		.PACKING		1
	41A-35005-57		.PACKING		1
-101	NAS1203-3		.BOLT		2
-102	NAS1203-4		.BOLT		4
	AN960D10L		.WASHER		6
	MS21042L3		.NUT		6
-103	S1043M		.NAMEPLATE - (V88308)		1
-104	41A-92080-2		LEVER ASSY - CANOPY HINGE (SEE FIG. 2-3-12)		REF
-105	NO NUMBER	*	CASE - PILOT FLIGHT INFO PUBLICATIONS		2
-106	NO NUMBER	*	BRACKET - FLIP CASE MOUNTING		1
-107	80-320	*	VELCRO HOOK (2 IN)		AR
	80-21N320	*	VELCRO PILE (2 IN)		AR
			-000-		
		*	IAW C-12-114-000/CF-397		

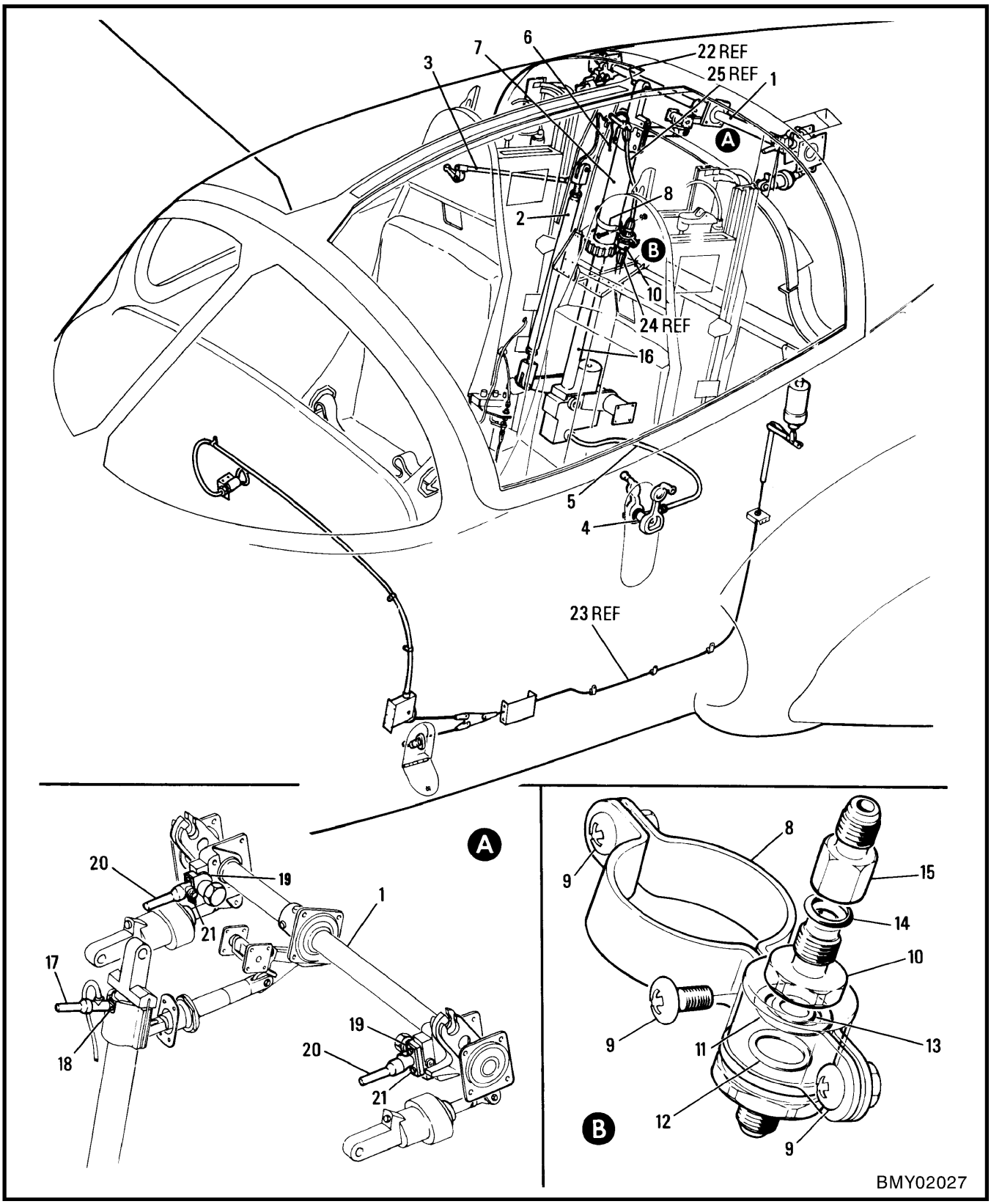

Figure 2-3-11 Canopy Operating & Jettison Mechanism

FIGURE AND INDEX NUMBER	GROUP FUSELAGE MAJOR ASSEMBLY CANOPY OPERATING & JETTISON MECHANISM PART NUMBER	1 2 3 4 5 6 7 NOMENCLATURE	EFFEC-TIVITY	UNITS PER ASSY
2-3-11 -	41A-92002	OPERATING MECHANISM INSTL - CANOPY (SEE FIG. 2-3-1)		NP
- 1	41A-92000	.HINGE MECHANISM INSTL - CANOPY (SEE FIG. 2-3-12)		REF
- 2	41A-92001	.LINKAGE INSTL - CANOPY OPERATING (SEE FIG. 2-3-13)		REF
- 3	41A-92003	.LOCK INSTL - CANOPY (SEE FIG. 2-3-14)		REF
- 4	41A-92007	.CRANK INSTL - CANOPY MECH (SEE FIG. 2-3-15)		REF
- 5	41A-92075	.DRIVE INSTL - CANOPY OPERATING (SEE FIG. 2-3-15)		REF
- 6	41A-92012	.BALLISTIC INSTL - CANOPY EJECTION (SEE FIG. 2-3-16)		REF
- 7	F893731	.REMOVER - AIRCRAFT CANOPY M1A3 (V36123)		1
	41A-42016	.BRACKET ASSY - COUPLING MOUNTING		1
	41A-42016-2	..BRACKET ASSY - COUPLING MOUNTING		1
- 8	41A-42016-4	...BRACKET - COUPLING MOUNTING		1
	41A-42016-8	...DECALCOMANIA - WARNING		1
- 9	MS27039-1-09	..SCREW		3
	AN960PD10L	..WASHER		3
	MS21042L3	..NUT		3
-10	315078-4	.COUPLING ASSY - (V69705) (BREAKWAY)		1
-11	22558-11	..O-RING - (V69705)		1
-12	22558-14	..O-RING - (V69705)		1
-13	22559-11	..O-RING - (V69705) (TEFLON BACK UP)		1
-14	MS28778-4	.PACKING		1
-15	AN894D4-3	.BUSHING		1
-16	41A-92010-800	.ACTUATOR ASSY - CANOPY OPERATING (MAY BE PURCHASED FROM (V36123))		1
	E9163M2	..SEALANT - (V36123)		1
	5-102	..PACKING - PREFORMED (V36123)		2
R -17	94-5-1A	.RELEASE - CANOPY REMOVER FIRING PIN (M1A1) (V36673)		1
-18	AN500A10-4	.SCREW		2
-19	41A-92107	.DISTANCE BLOCK - EXTRACT OR PIN		2
R -20	94-5-1A	.RELEASE - CANOPY HINGE FIRING PIN (M1A1) (V36673)		2
-21	AN500A10-20	.SCREW		4
-22	NAS464P5A20	BOLT - (ACTUATOR TO CANOPY) (SEE FIG. 2-3-2)		REF
-23	40276-2	CABLE ASSY - CANOPY EMERGENCY JETTISON (SEE FIG. 2-3-17)		REF
-24	MS28741-4-0210	HOSE - (SEE SECTION 9)		REF
-25	MS28741-3-0090	HOSE - (SEE SECTION 9)		REF

-000-

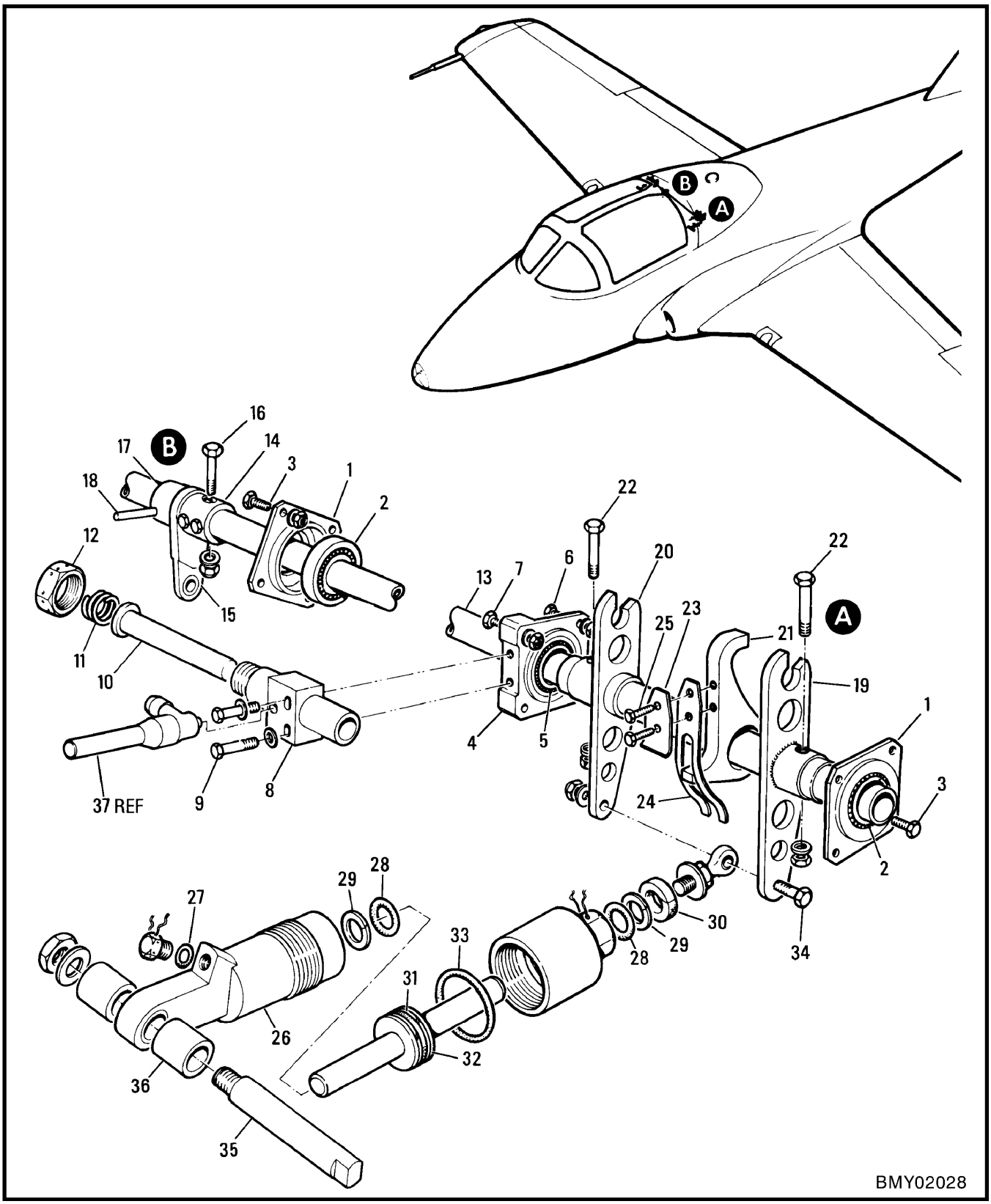

Figure 2-3-12 Canopy Hinge Mechanism

FIGURE AND INDEX NUMBER	GROUP FUSELAGE MAJOR ASSEMBLY CANOPY HINGE MECHANISM PART NUMBER	1 2 3 4 5 6 7 NOMENCLATURE	EFFEC-TIVITY	UNITS PER ASSY
2-3-12 -	41A-92000	HINGE MECHANISM INSTL - CANOPY(SEE FIG. 2-3-11)		NP
	41A-92032	.BEARING ASSY - TORQUE TUBE		3
- 1	41A-92032-2	..RETAINER - TORQUE TUBE BEARING		1
- 2	KP23BS	..BEARING - (V21335)		1
- 3	NAS6204-3	.BOLT		12
	AN960-416	.WASHER		12
	MS21042L4	.NUT		12
	41A-92023	.BEARING ASSY - TORQUE TUBE		2
- 4	41A-92023-2	..RETAINER - TORQUE TUBE BEARING		1
- 5	KP23BS	..BEARING - (V21335)		1
- 6	NAS6204-3	.BOLT		4
- 7	NAS6204-11	.BOLT		4
	AN960-416	.WASHER		8
	MS21042L4	.NUT		8
- 8	41A-92024	.BODY - HINGE STOP		2
- 9	NAS1003-14H	.BOLT		4
	AN960-10	.WASHER		4
-10	41A-92026	.PIN - HINGE STOP		2
-11	41A-92011	.SPRING - CANOPY HINGE		2
-12	41A-92025	.NUT - HINGE STOP		2
-13	41A-92033	.TORQUE TUBE - HINGE MECHANISM		1
-14	41A-92079	.LEVER ASSY - CANOPY OPERATING LINKAGE	A	1
	41A-92079-8	.LEVER ASSY - CANOPY OPERATING LINKAGE	B	1
-15	LHA4	..BEARING - (V73134)		1
-16	NAS1105-24	.BOLT		3
	AN960-516	.WASHER		3
	MS21042L5	.NUT		3
-17	41A-92031	.COLLAR - TORQUE TUBE LEVER		1
-18	NAS561P5-30	.PIN		1
-19	41A-92080-2	.LEVER ASSY - CANOPY HINGE		2
-20	41A-92080-4	.LEVER ASSY - CANOPY HINGE		2
-21	41A-92021	.PAWL - LOCKING		2
-22	NAS6204-24	.BOLT		2
	AN960-416	.WASHER		4
	MS21042L4	.NUT		4
-23	41A-92046	.PLATE - PAWL SPRING BACKING		2
-24	41A-92034	.SPRING - PAWL		2
-25	AN501A10-10	.SCREW		4
-26	C101040	.DAMPER ASSY - (V36123) (CANOPY HINGE) (IAW 41A-92015) (FOR BRKDN SEE C-13-729-000/MS-000)		2
-27	MS28778-3	..PACKING		1
-28	MS28775-113	..PACKING		2
-29	MS28774-113	..RETAINER		2
-30	MS28932-2	..WIPER		1
-31	MS28775-216	..PACKING		1
-32	MS28774-216	..RETAINER		1
-33	MS28775-130	..PACKING		1
-34	NAS1105-15	.BOLT		2
	AN960-516	.WASHER		2
	MS21042L5	.NUT		2
-35	41A-92154-2	.BOLT - CANOPY HINGE DAMPER		2
-36	NAS43DD9-63	.SPACER		4
	AN960-616	.WASHER		2
	MS21042L6	.NUT		2
-37	94-5-1A	RELEASE - FIRING PIN (SEE FIG. 2-3-11)		REF
		-000-		
	A	26001-26033, 26035-26059 & 26061-26070		
	B	26034, 26060, 26071 & SUBS		

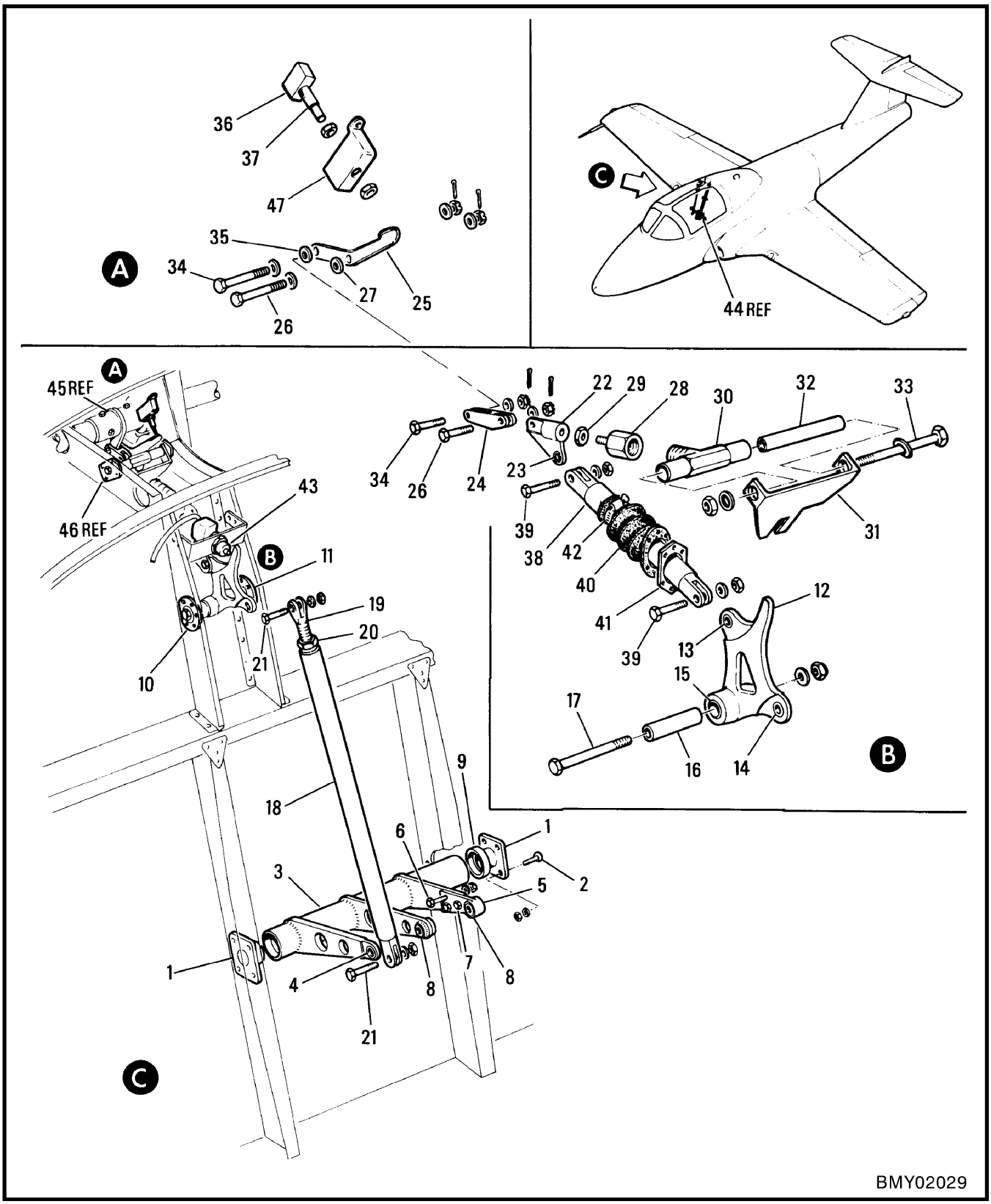

Figure 2-3-13 Canopy Operating Linkage

FIGURE AND INDEX NUMBER	GROUP FUSELAGE MAJOR ASSEMBLY CANOPY OPERATING LINKAGE PART NUMBER	1 2 3 4 5 6 7	NOMENCLATURE	EFFEC-TIVITY	UNITS PER ASSY
2-3-13 -	41A-92001-800		LINKAGE INSTL - CANOPY OPR (SEE FIG. 2-3-11)		NP
- 1	41A-92040		.BEARING - CANOPY MECHANISM FLANGED		2
- 2	NAS623-3-3		.SCREW		8
	AN960PD10		.WASHER		8
	MS21042L3		.NUT		8
	41A-92041		.LAYSHAFT ASSY - (CANOPY MECHANISM)		1
- 3	41A-92041-2		..LAYSHAFT - (CANOPY MECHANISM)		1
- 4	LHA5		..BEARING - (V73134)		1
- 5	41A-92051		..LEVER - LAYSHAFT ARM EN D		1
- 6	NAS1105-7		..BOLT		2
	AN960-516L		..WASHER		2
	MS21042L5		..NUT		2
- 7	41A-92041-14		..BOLT - SPECIAL		1
	AN960-516L		..WASHER		1
	AN320-5		..NUT		1
	MS24665-134		..COTTER PIN		1
- 8	AA607-2		..BUSHING - (V70417)		2
- 9	AA1801-1		..BUSHING - (V70417)		2
-10	41A-92042		.BEARING - CANOPY MECH FLANGED		1
-11	41A-92042-2		.BEARING - CANOPY MECH FLANGED		1
	41A-92036		.BELLCRANK ASSY - HINGE OPERATING		1
-12	41A-92036-2		..BELLCRANK - HINGE OPERATING		1
-13	LHA4		..BEARING - (V73134)		1
-14	LHA5		..BEARING - (V73134)		1
-15	AA607-3		..BUSHING - (V70417)		1
-16	41A-92043		.PIN - CANOPY MECHANISM BELLCRANK		1
-17	NAS6204-42		.BOLT		1
	AN970-4		.WASHER		1
	MS21042L4		.NUT		1
-18	41A-92037-804		.LINK ASSY - ADJUSTABLE		1
-19	41A-92016-2		..FORK END - CANOPY OPERATING LINKAGE		1
-20	NAS509-8		..NUT		1
-21	NAS1105-11		.BOLT		2
	AN960PD516		.WASHER		2
	MS21042L5		.NUT		2
	41A-92140-802		.LOCK ASSY - CANOPY HINGE		1
	41A-92141		..LEVER ASSY - CANOPY HINGE LOCK		1
-22	41A-92141-2		...LEVER - CANOPY HINGE LOCK		1
-23	LHA4		...BEARING - (V73134)		1
-24	41A-92144		..TOGGLE - CANOPY HINGE LOCK		1
-25	215-90012		..LEVER		1
-26	NAS6204-17D		..BOLT		1
-27	NAS43HT4-12		..SPACER		1
-28	41A-92143-2		..SCREW - CANOPY HINGE LOCK ADJUSTING		1
-29	41A-92140-2		..NUT - LOCKING		1
-30	41A-92142		..TRUNNION - CANOPY HINGE		1
-31	41A-92149-2	*	.BRACKET - CANOPY HINGE LOCK TRUNNION		1
-32	41A-92145		.DISTANCE TUBE - CANOPY HINGE LOCK		1
-33	NAS6204-50		.BOLT		1
-34	41A-92001-24	*	.BOLT		1
-35	NAS43HT4-12		.WASHER		1
	AN960PD416		.WASHER		2
	MS21042L4		.NUT		2
-36	MCD7711		.ACTUATOR MICROSWITCH		1
-37	DT2RA7		.SWITCH - (V94580)		1
-38	41A-92035-800		.LINK - CANOPY OPERATING		1
		*	IAW C-12-114-000/CF-337		

FIGURE AND INDEX NUMBER	GROUP FUSELAGE MAJOR ASSEMBLY CANOPY OPERATING LINKAGE PART NUMBER	1 2 3 4 5 6 7 NOMENCLATURE	EFFEC-TIVITY	UNITS PER ASSY
2-3-13 -39	NAS6204-10	.BOLT		2
	AN960PD416	.WASHER		2
	MS21042L4	.NUT		2
-40	3-5618	.SEAL - (V70628) (CANOPY OPRLINKAGE PRESSURE) (IAW 41A-92038)		1
-41	41A-92047	.RING - CANOPY OPR LINKAGE SEALING		1
-42	802-110	.CLAMP - (V75829)		1
-43	MS24331-1	.SWITCH ASSY - (S4M CANOPY LIMIT) (SEE SECTION 12)		REF
-44	41A-92010-800	ACTUATOR ASSY - (SEE FIG. 2-3-11)		REF
-45	41A-92079	LEVER ASSY - CANOPY LINKAGE (SEE FIG. 2-3-12)		REF
-46	41A-35055-116	PLATE - BEARING (SEE FIG. 2-3-10)		REF
-47	41A-35055-188	BRACKET - (RIVETED)		1
		-000-		

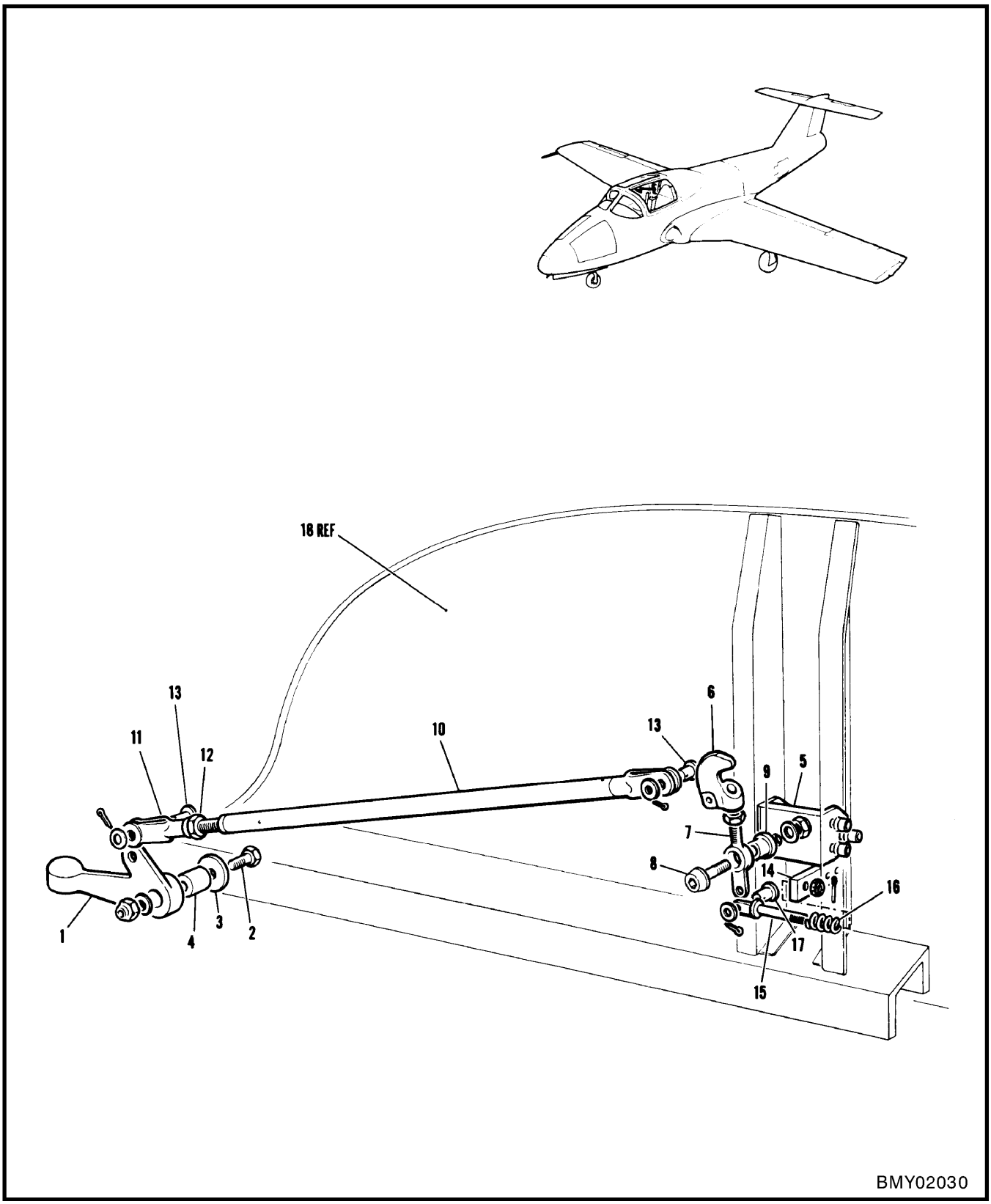

Figure 2-3-14 Canopy Lock

FIGURE AND INDEX NUMBER	GROUP FUSELAGE MAJOR ASSEMBLY CANOPY LOCK PART NUMBER	1 2 3 4 5 6 7 NOMENCLATURE	EFFEC-TIVITY	UNITS PER ASSY
2-3-14 -	41A-92003	LOCK INSTL - CANOPY (SEE FIG. 2-3-11)		NP
- 1	41A-92059	.BELLCRANK - CANOPY INTERLOCK		1
- 2	NAS6204-12	.BOLT		1
- 3	S1246-16-24-150	.WASHER - (V88308)		1
- 4	41A-92003-54	.SPACER - CANOPY INTERLOCK BELLCRANK (MAKE FROM NAS43HT4-27)		1
	AN960-416	.WASHER		1
	MS21042L4	.NUT		1
- 5	41A-92105	.BRACKET - CANOPY INTERLOCK LATCH		1
	ALPPH-T6-2	.HUCKBOLT - (V01212)		2
	NAS1080-6	.COLLAR		2
	ALPPH-T8-2	.HUCKBOLT - (V01212)		4
	NAS1080-8	.COLLAR		4
	41A-92102	.LATCH ASSY - CANOPY INTERLOCK		1
- 6	41A-92104	..HOOK - CANOPY INTERLOCK (LATCH)		1
- 7	41A-92103	..EYEBOLT - CANOPY INTERLOCK LATCH		1
	AN316-6R	..NUT		1
- 8	MS20006-12	.BOLT		1
- 9	41A-92106	.SPACER - CANOPY INTERLOCK		1
	AN960-616	.WASHER		1
	MS21042L6	.NUT		1
-10	41A-92057	.LINK ASSY - CANOPY INTERLOCK		1
-11	AN486-4	.CLEVIS		1
-12	AN316-4R	.NUT		1
-13	MS20392-2C19	.PIN		2
	AN960-10	.WASHER		2
	MS24665-130	.COTTER PIN		2
-14	41A-92063	.LATCH BRACKET - CANOPY LOCK SPRING		1
-15	AN43B15	.EYEBOLT		1
-16	41A-92066	.SPRING - CANOPY INTERLOCK COMPRESSION		1
	AN310-4	.NUT		1
	MS24665-134	.COTTER PIN		1
-17	MS20392-2C19	.PIN		1
	AN960-10	.WASHER		1
	MS24665-130	.COTTER PIN		1
-18	41A-35037	BULKHEAD INSTL - REAR PRESSURE (SEE FIG. 2-3-7)		REF

-000-

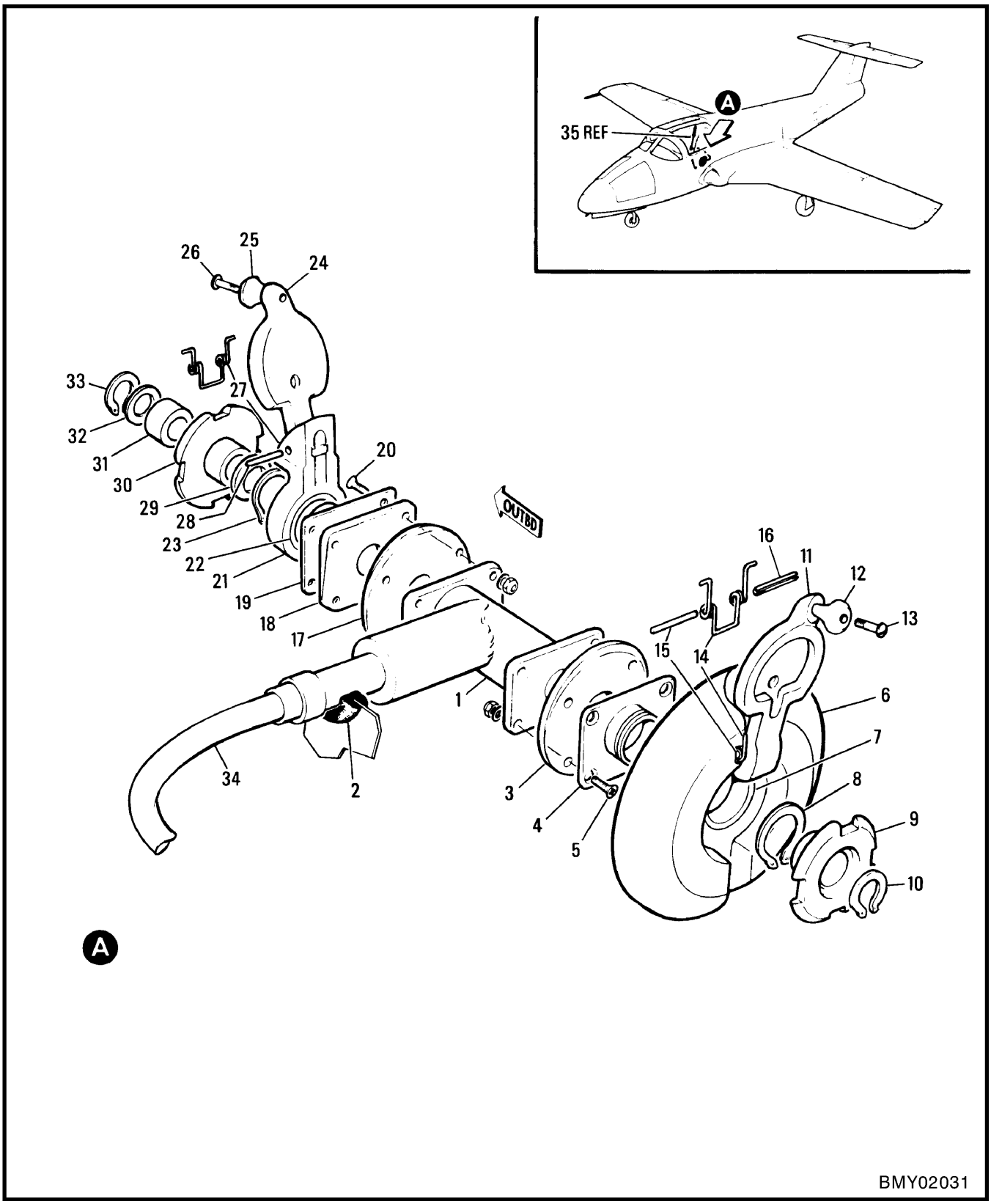

Figure 2-3-15 Canopy Manual Operating Crank & Flexible Drive

FIGURE AND INDEX NUMBER	GROUP FUSELAGE MAJOR ASSEMBLY CANOPY MANUAL OPERATING CRANK & FLEXIBLE DRIVE PART NUMBER	1 2 3 4 5 6 7 NOMENCLATURE	EFFEC-TIVITY	UNITS PER ASSY
2-3-15 -	41A-92007	CRANK INSTL - CANOPY MECHANISM (MODIFIED IAW C-12-114-000/CF-361) (SEE FIG. 2-3-11)	001-010	NP
	41A-92007-802	CRANK INSTL - CANOPY MECHANISM	011-050	NP
	41A-92007-804	CRANK INSTL - CANOPY MECHANISM	051-150	NP
	41A-92007-806	CRANK INSTL - CANOPY MECHANISM	151-	NP
- 1	R310M20	.GEARBOX ASSY - (V36123) (MANUAL OPR CANOPY) (IAW 41A-92054)		1
- 2	MS35489-75	.GROMMET - (CANOPY GEARBOX)		1
- 3	41A-92007-30	.SPACER - (INBOARD)		1
- 4	41A-92069-2	.MOUNTING - CLUTCH (INBOARD)		1
- 5	MS24693-51	.SCREW		4
	AN960-8	.WASHER		4
	MS21042L08	.NUT		4
	41A-92068	.MOUNTING ASSY - CANOPY CRANK (INBOARD)		1
- 6	41A-92068-2	..MOUNTING - CANOPY CRANK (INBOARD)		1
- 7	41A-92068-4	..BUSHING - CANOPY CRANK MOUNTING (INBD)		1
- 8	MS16624-1087	.RING		1
- 9	41A-92073-2	.CLUTCH PLATE - (INBOARD)		1
-10	MS16624-1037	.RING		1
	41A-92067-800	.CRANK ASSY - MANUAL (INBOARD)	001-150	1
	41A-92067-802	.CRANK ASSY - MANUAL (INBOARD)	151-	1
	41A-92074-2	..CRANK - MANUAL (INBOARD)	001-150	1
-11	41A-92074-4	..CRANK - MANUAL (INBOARD) (IAW C-12-114-000/CF-444)	151-	1
-12	41A-92071	..KNOB - HANDCRANK (INBOARD)		1
-13	S1277C4-10	..SCREW - (V88308)		1
-14	41A-92070	.SPRING - CRANK		1
-15	NAS561C6-48	.PIN		1
-16	MS171606	.PIN - SPRING		1
-17	41A-92007-32	.SPACER - (OUTBOARD)		1
-18	41A-92007-34	.PACKING - (OUTBOARD)	011-150	1
-19	41A-92069-2	.MOUNTING - CLUTCH (OUTBOARD)		1
-20	MS24693-51	.SCREW		4
	AN960-8	.WASHER		4
	MS21042L08	.NUT		4
	41A-92072	.MOUNTING ASSY - CRANK (OUTBOARD)		1
-21	41A-92072-2	..MOUNTING - CRANK (OUTBOARD)		1
-22	41A-92072-4	..BUSHING - MOUNTING CRANK		1
-23	MS16624-1087	.RING		1
	41A-92067-800	.CRANK ASSY - MANUAL (OUTBOARD)		1
-24	41A-92074-2	..CRANK - MANUAL (OUTBOARD)		1
-25	41A-92071	..KNOB - HANDCRANK (OUTBOARD)		1
-26	S1277C4-10	..SCREW - (V88308)		1
-27	41A-92070	.SPRING - CRANK (OUTBOARD)		1
-28	NAS561C6-22	.PIN		1
-29	AN960C616	.WASHER - (OUTBD CLUTCH PLATE BEARING)	A	1
-30	41A-92073-2	.CLUTCH PLATE - (OUTBOARD)		1
-31	NAS43DD6-9	.SPACER	A	1
-32	AN960D616L	.WASHER - (OUTBOARD CLUTCH PLATE)	A	1
-33	MS16624-1037	.RING		1
	41A-92075	DRIVE INSTL - CANOPY OPERATING (SEE FIG. 2-3-11)		NP
-34	8022Y0C	.SHAFT ASSY - (97945) (FLEXIBLE) (IAW 41A-92076)		1
	316-7-6	.CLIP - (V00502)		AR
	NAS623-2-2	.SCREW		AR
	AN960PD8L	.WASHER		AR
	MS21042L08	.NUT		AR
-35	41A-92010-800	ACTUATOR ASSY - CANOPY OPERATING (SEE FIG. 2-3-11)		REF
		-000-		
	A	26001-26010 & 26151 & SUBS		

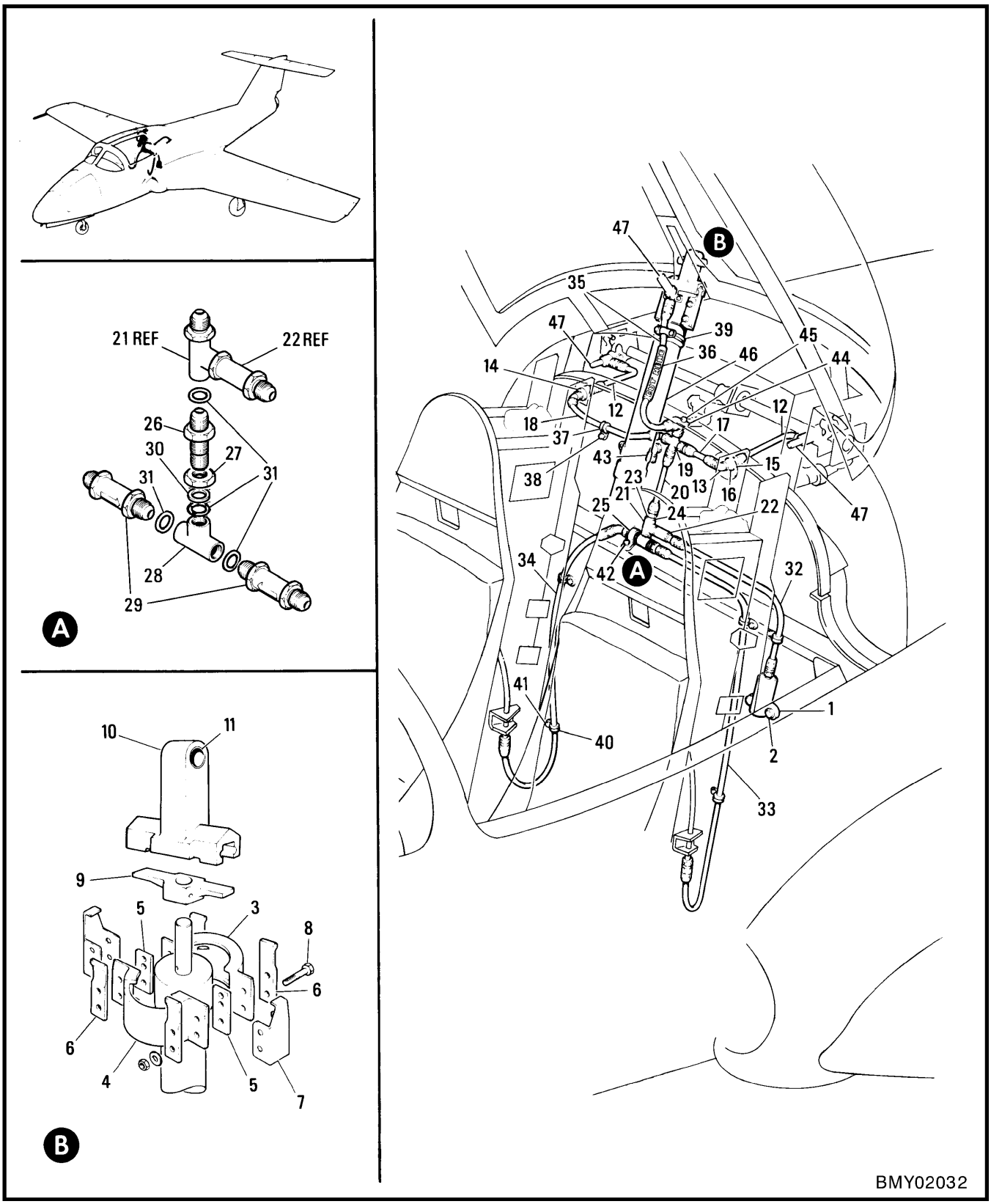

Figure 2-3-16 Canopy Jettison Mechanism

FIGURE AND INDEX NUMBER	GROUP FUSELAGE MAJOR ASSEMBLY CANOPY JETTISON MECHANISM PART NUMBER		1 2 3 4 5 6 7 NOMENCLATURE	EFFEC-TIVITY	UNITS PER ASSY
2-3-16 -	41A-92012-800		BALLISTIC INSTL - CANOPY EJECTION (SEE FIG. 2-3-11)		NP
- 1	94-3-1		.INITIATOR - CARTRIDGE ACTUATED M3A2 (V36673)		1
- 2	NAS6204-3		.BOLT		4
	AN960-416L		.WASHER		4
	41A-92004-802		.REMOVER ASSY - CANOPY (FOR SPARES ORDER 41A-92004-804)		1
	41A-92004-804		.REMOVER ASSY - CANOPY (SPARE FOR 41A-920004-802)		
	41A-92055-802		..CLAMP ASSY - TOP FITTING		1
- 3	41A-92055-14		...CLIP - TOP FITTING (IAW C-12-114-000/CF-398)		1
- 4	41A-92055-18		...CLIP - TOP FITTING (FOR SPARES ORDER 41A-92055-20)		1
	41A-92055-20		...CLIP ASSY - TOP FITTING (SPARE FOR 41A-92055-18)		
- 5	41A-92160-2		...LINK - CANOPY REMOVER		2
- 6	41A-92055-17		...SPRING		4
- 7	C69B47379-1	*	...CLIP		2
- 8	NAS464P4A12	*	...BOLT		4
	AN960-416	*	...WASHER		4
	MS21042L4	*	...NUT		4
- 9	41A-92114-2	*	..COLLAR - LOCKING (SCREW HOLE PLUGGED) (FOR SPARES ORDER 41A-92114-4)		1
	41A-92114-4		..COLLAR - LOCKING (SPARE FOR 41A-92114-2)		
	41A-92056-802		..LUG ASSY - SHEAR PIN		1
-10	41A-92056-8		...BUSHING		1
-11	41A-92056-4		...BUSHING		1
-12	AE1002208E0076		.HOSE - BALLISTIC (V69705) (BLKHD TO FIRING PIN)		2
-13	AN833-4S	**	.ELBOW		1
-14	AN832-4S	**	.UNION		1
-15	MS28778-4	**	.PACKING		2
-16	AN924-4S	**	.NUT		2
-17	AE1002208E0045		.HOSE - BALLISTIC (V69705) (BLKHD PORT TO TEE)		1
-18	AE1680E0087-180		.HOSE - BALLISTIC (V69705) (BLKHD STBD TO TEE)		1
-19	2024-4-4S	**	.TEE - (V69705)		1
-20	AE1002208E0063		.HOSE - BALLISTIC (V69705) (TEE TO CHECK VALVE)		1
-21	AN938-4C	**	.TEE		1
-22	458-4SS27-6	***	.VALVE - CHECK (V86768)		1
-23	AN815-4C	**	.NIPPLE		1
-24	MS28778-4	**	.PACKING		3
-25	MS21919WDG11	***	.CLAMP		1
-26	AN832-4J	***	.UNION		1
-27	AN6289-J4	***	.NUT		1
-28	AN938J4	***	.TEE		1
-29	458-4SS27-6	***	.VALVE - CHECK (V86768)		2
-30	MS28773-04	***	.RETAINER		1
-31	MS28778-4	***	.PACKING		4
-32	AE1002208E0243		.HOSE - BALLISTIC (V69705) (CHECK VALVE TO MA3A2)		1
-33	AE1002208E0452		.HOSE - BALLISTIC (V69705) (CHECK VALVE TO LH SEAT)		1
-34	AE1002352E0460		.HOSE - BALLISTIC (V69705) (CHECK VALVE TO RH SEAT)		1
-35	AE1002359E0146		.HOSE - BALLISTIC (V69705) (TEE TO CANOPY REMOVER)		1
R	MS21104DW4		.CLAMP		1
-36	2499	**	.DECALCOMANIA - (CDL) (IAW RCAF L85)		1
		*	IAW C-12-114-000/CF-333		
		**	IAW C-12-114-000/CF-428		
		***	IAW C-12-114-000/CF-509		

FIGURE AND INDEX NUMBER	GROUP FUSELAGE MAJOR ASSEMBLY CANOPY JETTISON MECHANISM PART NUMBER	1 2 3 4 5 6 7	NOMENCLATURE	EFFEC-TIVITY	UNITS PER ASSY
2-3-16 -37	MS21104D5	*	.CLAMP		1
-38	NAS623-3-2	*	.SCREW		1
	AN960-10L	*	.WASHER		1
	MS21042L3	*	.NUT		1
-39	MS21919WDG31	*	.CLAMP		1
R	AN520-10R9		.SCREW		1
R	AN960-10L		.WASHER		1
R	MS21044D3		.NUT		1
-40	MS21919WDG8	*	.CLAMP		1
-41	AN520-10R9	*	.SCREW		1
	AN960-10L	*	.WASHER		1
R	MS21044D3	*	.NUT		1
-42	MS35206-264	*	.SCREW		1
-43	MS21914-4	*	.CAP		2
-44	MS21104D8	*	.CLAMP		1
-45	MS51958-1	*	.SCREW		1
	AN960-10	*	.WASHER		1
	NAS1291C08	*	.NUT		1
-46	F893731	*	REMOVER - AIRCRAFT CANOPY M1A3 (V36673) (SEE FIG. 2-3-11)		REF
-47	94-5-1A	*	RELEASE - FIRING PIN M1A1 (V36673) (SEE FIG. 2-3-11)		REF
			-000-		
		*	IAW C-12-114-000/CF-428		

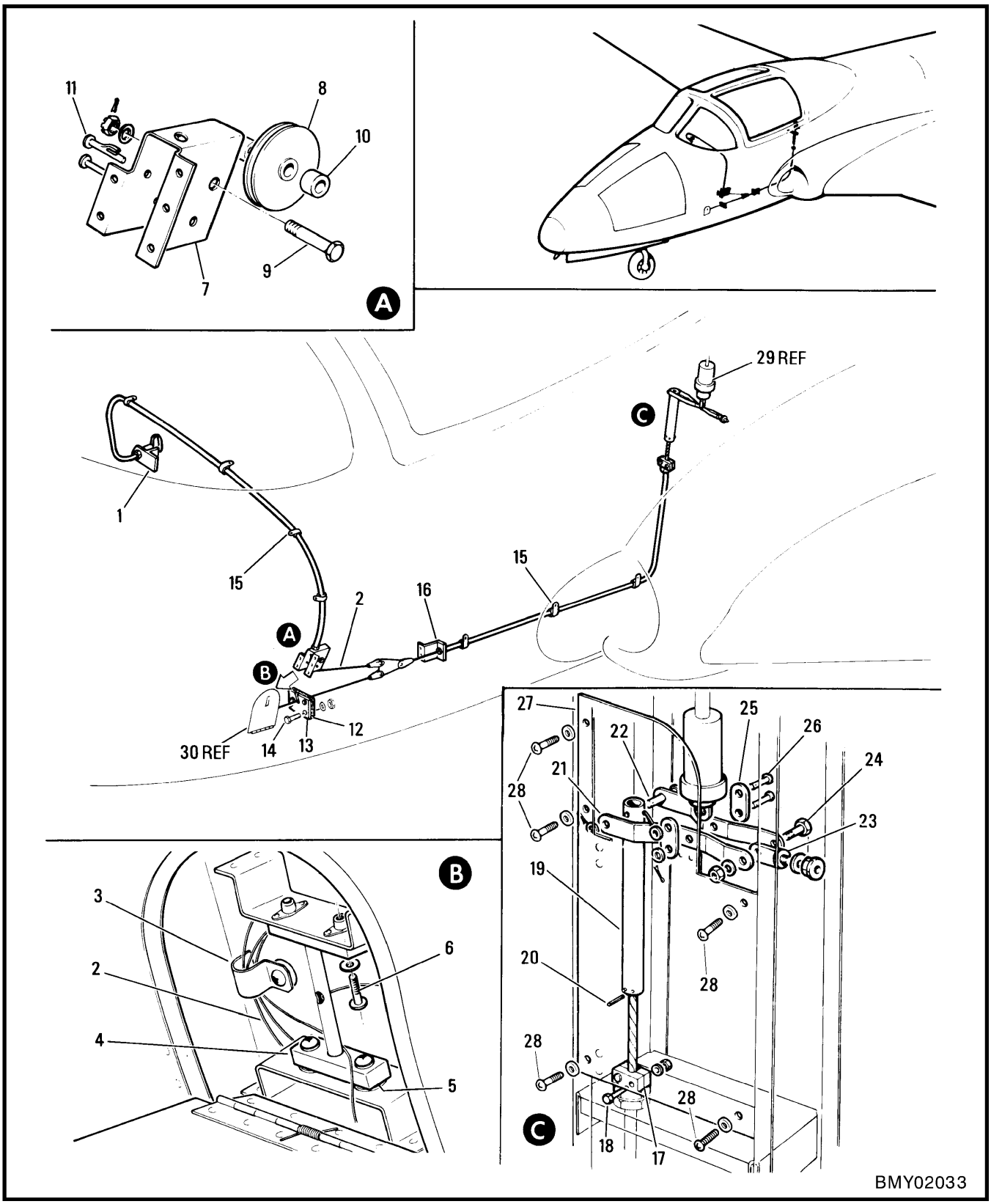

Figure 2-3-17 Canopy Emergency Jettison Mechanism

FIGURE AND INDEX NUMBER	GROUP FUSELAGE MAJOR ASSEMBLY CANOPY EMERGENCY JETTISON MECHANISM PART NUMBER	1 2 3 4 5 6 7 NOMENCLATURE	EFFEC-TIVITY	UNITS PER ASSY
2-3-17 -	41A-92090	JETTISON MECH INSTL - CANOPY EMERGENCY (SEE FIG. 2-3-1)		NP
- 1	41A-92095-8	.BRACKET - (CANOPY EMERGENCY JETTISON)		1
- 2	40276-2	.CABLE ASSY - (V78710) (CANOPY EMY JETTISON) (IAW 41A-92100-802)		1
- 3	41A-92096	.CLIP ASSY - CANOPY JETTISON EXTERNAL CABLE		2
- 4	41A-92090-50	.BLOCK ASSY - CANOPY JETTISON		2
	41A-92090-52	..STRAP - CANOPY JETTISON		1
	41A-92090-54	..BLOCK - (AMS-3209)		1
- 5	S1246LS17-19-062	.WASHER - (V88308)		AR
- 6	MS35206-249	.SCREW		4
	AN960D8	.WASHER		4
- 7	41A-92095-6	.BRACKET - PULLEY		1
- 8	MS20219-2	.PULLEY - (CANOPY JETTISON CABLE)		1
- 9	NAS6204-13D	.BOLT		1
-10	NAS43DD4-10	.SPACER		1
	AN960PD416	.WASHER		1
	AN320-4	.NUT		1
	MS24665-7	.COTTER PIN		1
-11	NAS427K14	.PIN		2
-12	41A-92095-12	.WASHER - RUBBER (CANOPY JETTISON CABLE)		1
-13	41A-92095-10	.PLATE - SLOTTED (CANOPY JETTISON CABLE)		1
-14	MS35206-245	.SCREW		3
	AN960-8	.WASHER		3
	NAS684A08	.NUT		3
-15	AN742-4	.CLAMP		AR
-16	41A-92095-4	.ZEE - (CANOPY JETTISON CABLE)		1
	41A-92090-16	.FAIRLEAD ASSY - CABLE		1
-17	41A-92090-27	..BLOCK - CABLE FAIRLEAD		2
-18	NAS1103-8	..BOLT		2
	AN960D10L	..WASHER		2
	MS21042L3	..NUT		2
	41A-92090-18	.TUBE ASSY - CANOPY JETTISON CABLE		1
-19	41A-92090-28	..TUBE - CANOPY JETTISON CABLE		1
-20	NAS561C4-8	..PIN		2
-21	41A-92095-14	.PLATE - CANOPY JETTISON CABLE LEVER		2
-22	1225C6-65	.PIN		1
	AN960PD10L	.WASHER		1
	MS24665-132	.COTTER PIN		1
-23	AN42B3A	.EYEBOLT		1
	AN960PD10L	.WASHER		1
	MS21042L3	.NUT		1
-24	NAS1103-4	.BOLT		1
	AN960PD10L	.WASHER		1
	MS21042L3	.NUT		1
-25	41A-92095-16	.LINK - (CANOPY JETTISON CABLE)		2
-26	MS20392-2C7	.PIN		2
	AN960PD10	.WASHER		2
	MS24665-132	.COTTER PIN		2

FIGURE AND INDEX NUMBER	GROUP FUSELAGE MAJOR ASSEMBLY CANOPY EMERGENCY JETTISON MECHANISM PART NUMBER		1 2 3 4 5 6 7 NOMENCLATURE	EFFEC-TIVITY	UNITS PER ASSY
2-3-17 -	NO NUMBER	*	PLATE INSTL - CANOPY EMERGENCY JETTISON INITIATOR LEVER PROTECTIVE COVER		NP
-27	NO NUMBER	*	.PLATE ASSY - COVER		1
-28	MS35206-245	*	.SCREW		5
	AN960PD8L	*	.WASHER		5
-29	94-3-1		INITIATOR - CARTRIDGE ACTUATED M3A1 (V36673) (SEE FIG. 2-3-16)		REF
-30	41A-35007-42		DOOR ASSY - CANOPY EMERGENCY JETTISON (SEE FIG. 2-3-8)		REF
			-000-		
		*	IAW C-12-114-000/CF-430		

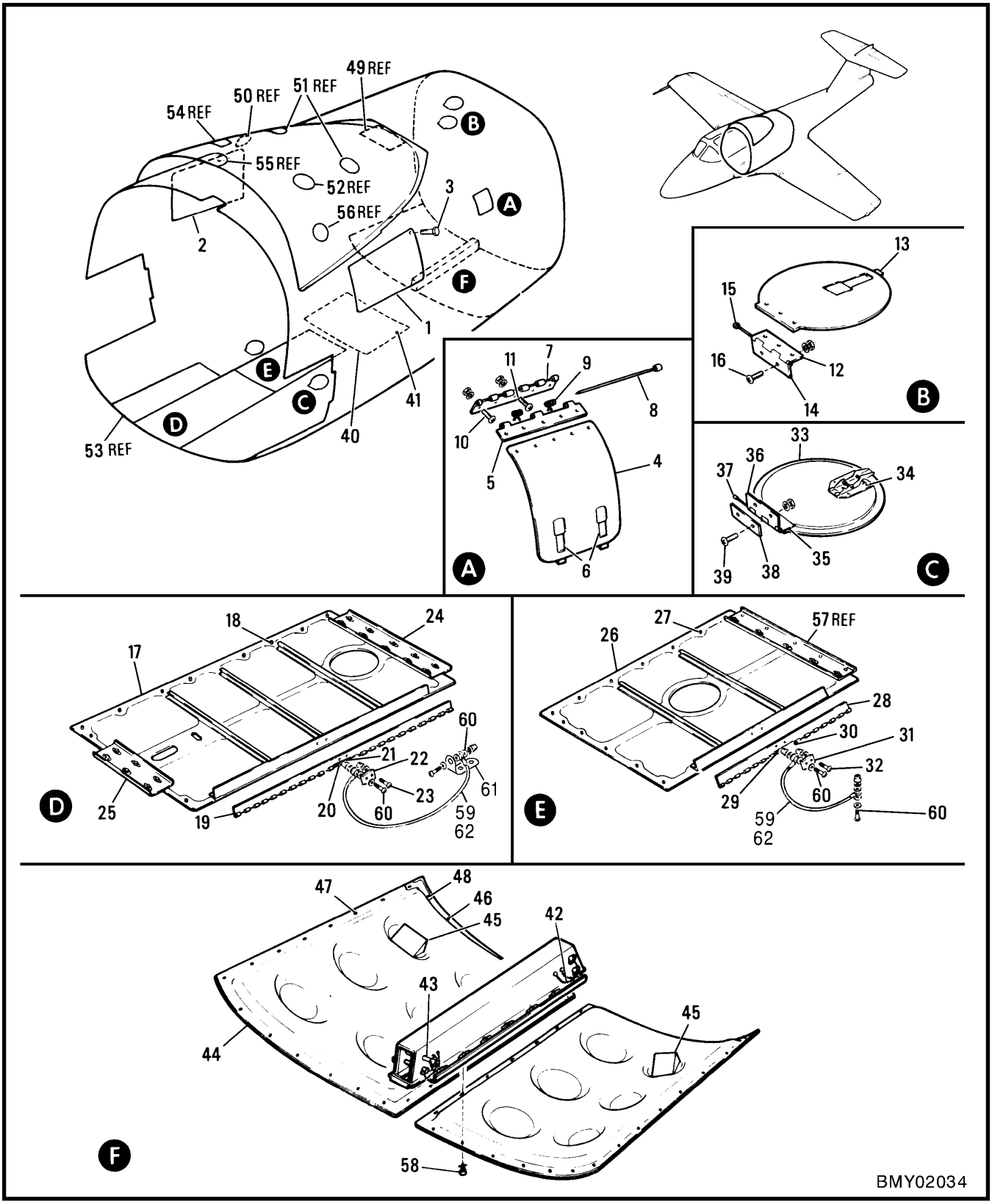

BMY02034

Figure 2-3-18 Centre Fuselage Access Doors

FIGURE AND INDEX NUMBER	GROUP FUSELAGE MAJOR ASSEMBLY CENTRE FUSELAGE ACCESS DOORS PART NUMBER	1 2 3 4 5 6 7 NOMENCLATURE	EFFEC-TIVITY	UNITS PER ASSY
2-3-18 -	41A-35069	DOOR INSTL - FUEL CENTRE TANK ACCESS PORT (SEE FIG. 2-3-5)		NP
	41A-35069-1	DOOR INSTL - FUEL CENTRE TANK ACCESS STBD		NP
	41A-35069-2	.DOOR ASSY - FUEL CENTRE TANK ACCESS LH (I)		1
	41A-35069-3	.DOOR ASSY - FUEL CENTRE TANK ACCESS RH (I)		1
- 1	41A-35069-4	..DOOR - FUEL CENTRE TANK ACCESS LH		1
- 2	41A-35069-5	..DOOR - FUEL CENTRE TANK ACCESS RH		1
- 3	NAS1203-2	.BOLT		43
	41A-35140	DOOR INSTL - HYD TANK FILLER ACCESS (PORT) (SEE FIG. 2-3-5)		NP
	41A-35140-2	.DOOR ASSY - HYD TANK FILLER ACCESS (PORT) (INTERCHANGEABLE)		1
- 4	41A-35140-4	..DOOR - HYD TANK FILLER ACCESS (PORT)		1
- 5	41A-35140-6	..HALF HINGE - HYD TANK FILLER ACCESS DOOR		1
- 6	H5000-2-072-072	..LATCH ASSY - (V83014)		2
- 7	41A-35140-8	.HALF HINGE - HYD TANK FILLER ACCESS DOOR		1
- 8	S1267-9-550	.PIN ASSY - (V88308)		1
- 9	S1440	.SPRING - (V88308)		2
-10	NAS623-3-2	.SCREW		4
-11	NAS623-3-8	.SCREW		1
	AN960-10L	.WASHER		5
	MS21042L3	.NUT		5
	41A-35103	DOOR INSTL - FLIGHT CONTROLS BREAK ACCESS (SEE FIG. 2-3-5)		NP
	41A-35103-4	.DOOR ASSY - FLIGHT CONTROLS BREAK ACCESS (INTERCHANGEABLE)		2
-12	41A-35103-8	..HALF HINGE - FLIGHT CTLBREAK DOOR		1
-13	H5000-2-051-081	..LATCH ASSY - (V83014)		1
-14	41A-35103-26	.HALF HINGE - FLIGHT CTL BREAK DOOR		2
-15	S1267-9-320	.PIN ASSY - (V88308)		2
-16	NAS623-3-2	.SCREW		4
	AN960-10L	.WASHER		4
	MS21042L3	.NUT		4
	41A-35081	DOOR INSTL - FS 236 TO REAR BULKHEAD ACCESS (SEE FIG. 2-3-5)		NP
-17	41A-35081-2	.DOOR ASSY - FS 236 TO REAR BULKHEAD ACCESS (REPLACEABLE)		1
-18	40S5-3	..STUD - (V71286)		19
	R4G	..SNAP RING - (V71286)		19
	4002H	..GROMMET - (V71286)		19
-19	41A-35081-12	..HALF HINGE		1
-20	41A-35081-14	.PIN - HINGE		1
-21	41A-35081-16	.PIN - HINGE		1
-22	41A-35074-12	.PLATE - HINGE PIN		1
-23	NAS623-3-3	.SCREW		2
	AN960D10L	.WASHER		2
	MS21042L3	.NUT		2
-24	41A-35081-34	.CHANNEL ASSY - (I)		1
-25	41A-35081-20	.CHANNEL ASSY - (I)		1
	41A-35074	DOOR INSTL - FS 235-257 ACCESS (SEE FIG. 2-3-5)		NP
-26	41A-35074-2	.DOOR ASSY - FS 235-257 ACCESS (I)		1
-27	40S5-3	..STUD - (V71286)		17
	R4G	..SNAP RING - (V71286)		17
	4002H	..GROMMET - (V71286)		17
-28	41A-35074-8	..HALF HINGE		1
-29	S1267-9-670	.PIN - (V88308)		1
-30	S1267-9-690	.PIN - (V88308)		1
-31	41A-35074-12	.PLATE - HINGE PIN		1

FIGURE AND INDEX NUMBER	GROUP FUSELAGE MAJOR ASSEMBLY CENTRE FUSELAGE ACCESS DOORS PART NUMBER	1 2 3 4 5 6 7 NOMENCLATURE	EFFEC-TIVITY	UNITS PER ASSY
2-3-18 -32	NAS623-3-3	.SCREW		2
	AN960D10L	.WASHER		2
	MS21042L3	.NUT		2
	41A-35106	DOOR INSTL - TANK WATER DRAIN ACCESS PORT (SEE FIG. 2-3-5)		NP
	41A-35106-1	DOOR INSTL - TANK WATER DRAIN ACCESS STBD		NP
	41A-35106-6	.DOOR ASSY - TANK WATER DRAIN ACCESS (I)		1
-33	41A-35106-8	..DOOR - TANK WATER DRAIN ACCESS		1
-34	H5000-2-051-081	..LATCH ASSY - (V83014)		1
-35	41A-35106-10	..HALF HINGE		1
-36	41A-35106-20	.HALF HINGE		1
-37	S1267-9-320	.PIN ASSY - (V88308)		1
-38	41A-35106-18	.PACKING - WATER DRAIN ACCESS DOOR HINGE		1
-39	NAS623-3-2	.SCREW		2
	AN960-10L	.WASHER		2
	MS21042L3	.NUT	001-050	2
-40	41A-35096-40	DOOR ASSY - COMPRESSOR BLADE (I) (SEE FIG. 2-3-5)		1
-41	40S5-3	.STUD - (V71286)		29
	R4G	.SNAP RING - (V71286)		29
	4002G	.GROMMET - (V71286)		29
	41A-35129-48	DOOR INSTL - ENGINE ACCESS (SEE FIG. 2-3-5)		NP
	41A-35129-16	.BEAM ASSY - DOOR HINGE CENTRE (I)		1
-42	NAS1201C6A78	..CHAIN		4
-43	NAS1334S6S18	..PIN		4
	41A-35129-26	.DOOR ASSY - ENGINE ACCESS LH (I)		1
-44	41A-35129-27	.DOOR ASSY - ENGINE ACCESS RH (I)		1
-45	41A-35129-12	..LOUVER - (VENT) (RIVETED)		2
-46	40S5-2	..STUD - (V71286)		6
-47	40S5-3	..STUD - (V71286)		11
-48	40S5-4	..STUD - (V71286)		3
	4002G	..GROMMET - (V71286)		20
	R4G	..SNAP RING - (V71286)		20
-49	41A-35107	DOOR - FS 268-278 UP PER ACCESS (SEE FIG. 2-3-6)		REF
-50	41A-35031-40	DOOR ASSY - FUEL FILLER ACCESS (SEE FIG. 2-3-10)		REF
-51	41A-35031-102	DOOR - FUEL VENT ACCESS (SEE FIG. 2-3-10)		REF
-52	41A-35031-106	DOOR - FUEL VENT ACCESS (SEE FIG. 2-3-10)		REF
-53	41A-35061-4	DOOR ASSY - (SEE FIG. 2-3-6)		REF
-54	41A-35031-36	DOOR - PRESSURE REGULATOR VALVE ACCESS (SEE FIG. 2-3-10)		REF
-55	41A-35031-128	DOOR - CANOPY LOCK MECHANISM ACCESS (SEE FIG. 2-3-10)		REF
-56	41A-35031-30	DOOR - CANOPY TORQUE SHAFT ACCESS (SEE FIG. 2-3-10)		REF
-57	41A-35081-34	CHANNEL ASSY - (DOOR LANDING PLATE) (SEE FIG. 2-3-5)		REF
	41A-35179	HINGE - ENGINE ACCESS DOOR INSTL		NP
-58	40S5-2	.STUD - (V71286)		16
	4002G	.GROMMET - (V71286)		16
	R4G	.SNAP RING - (V71286)		16
	214-16	.RECEPTACLE		16
	NW4528142-1	JUMPER INSTL - BONDING (SEE SECTION 12)		REF
-59	M83413/8-A06BB	.JUMPER ASSY		2
	M23053/5-104-9	.SLEEVING - INSULATION		AR
-60	MS35207-263	.SCREW		4
	AN960JD10L	.WASHER		8
	AN960-10L	.WASHER		4
	MS35338-43	.WASHER - LOCK		4
	MS21042L3	.NUT		4
-61	NW4602007-1	.BRACKET		1
	CR3213-4	.RIVET - BLIND		3
		-000-		

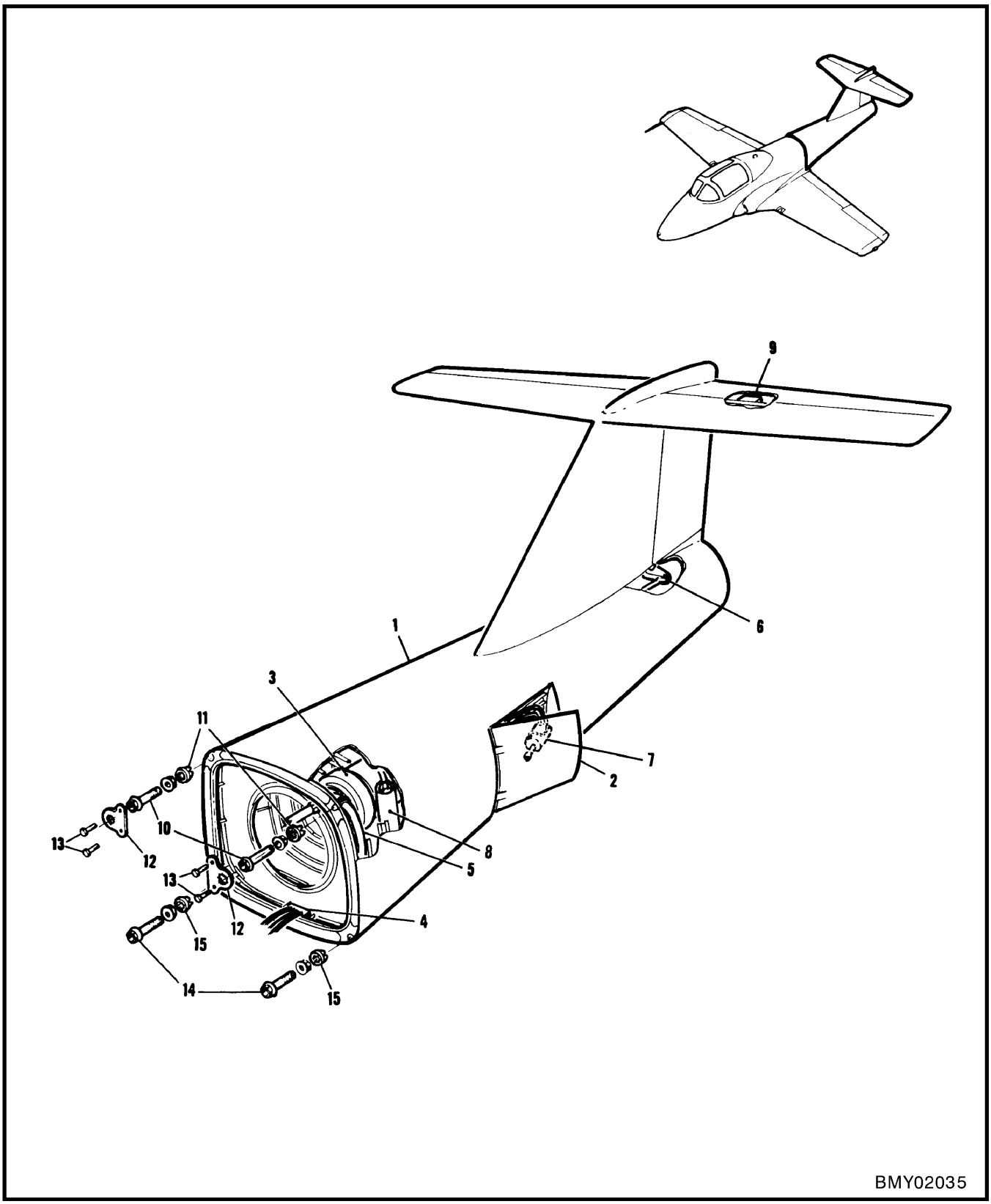

Figure 2-3-19 Aft Fuselage & Joint Attachment

FIGURE AND INDEX NUMBER	GROUP FUSELAGE MAJOR ASSEMBLY AFT FUSELAGE & JOINT ATTACHMENT PART NUMBER	1 2 3 4 5 6 7 NOMENCLATURE	EFFEC-TIVITY	UNITS PER ASSY
2-3-19 -	41A-36001-800	FUSELAGE ASSY - AFT (INTERCHANGEABLE) (SEE FIG. 1) (FOR SPARES ORDER 41A-36001-802)		1
	41A-36001-802	FUSELAGE ASSY - AFT (SPARE FOR 41A-36001-800)		
- 1	41A-36002-802	.FUSELAGE STRUCTURE GENL ASSY - AFT (SEE FIG. 2-3-20)		REF
- 2	41A-36057	.SPEEDBRAKE INSTL - (SEE FIG. 2-3-21)		REF
- 3	41A-44000-2	.JET PIPE INSTL - POWER PLANT (SEE SECTION 5)		REF
- 4	41A-44001-4	.DRAIN INSTL - POWER PLANT (SEE SECTION 5)		REF
- 5	41A-65000-4	.VENT SYS INSTL - REAR FUS FUEL (SEE SECTION 6)		REF
- 6	41A-90005	.FLIGHT CONTROLS INSTL - AFT FUSELAGE (SEE SECTION 7)		REF
- 7	41A-42306	.HYDRAULIC SYS INSTL - AFT FUSELAGE (SEE SECTION 8)		REF
- 8	41A-99005	.JET PUMP INSTL - ZONE 2 COOLING (SEE SECTION 5)		REF
- 9	41A-42102	.ELECTRICAL EQUIP. INSTL - AFT FUS (SEE SECTION 12)		REF
	41A-36007	.JOINT INSTL - CENTRE TO AFT FS 308		NP
-10	DAA629-46	..BOLT - (DUM) (CENTRE TO AFT FUSELAGE JOINT UPPER)		2
	41-30081-8	..WASHER - LONGERON FITTING (FWD UPPER LH)		1
	41-30081-10	..WASHER - LONGERON FITTING (FWD UPPER RH)		1
	41A-36058-6	..WASHER - FUS JOINT (AFT UPPER LH)		1
	41A-36058-8	..WASHER - FUS JOINT (AFT UPPER RH)		1
	42FW918	..NUT - (V56878)		2
-11	41A-36060	..CAP - CENTRE TO AFT FUS JOINT LOCKING		2
		OR		
	41A-36060-2	..CAP - CENTRE TO AFT FUS JOINT LOCKING		
	MS24665-357	..COTTER PIN		2
-12	41A-35109	..PLATE - FS 308 LOCK (UPPER)		2
-13	NAS1103-3	..BOLT		4
	AN960PD10L	..WASHER		4
	MS21042L3	..NUT		4
-14	DAA628-40	..BOLT - (DUM) (CENTRE TO REAR FUSELAGE JOINT LOWER)		2
	41-30081-12	..WASHER - LONGERON FITTING (FWD LOWER LH)		1
	41-30081-14	..WASHER - LONGERON FITTING (FWD LOWER RH)		1
	41A-36058-10	..WASHER - FUS JOINT (AFT LOWER LH)		1
	41A-36058-12	..WASHER - FUS JOINT (AFT LOWER RH)		1
	42FW820	..NUT - (V56878)		2
-15	41A-36059	..CAP - CENTRE TO AFT FUS JOINT LOCKING		2
	MS24665-289	..COTTER PIN		2
		-000-		

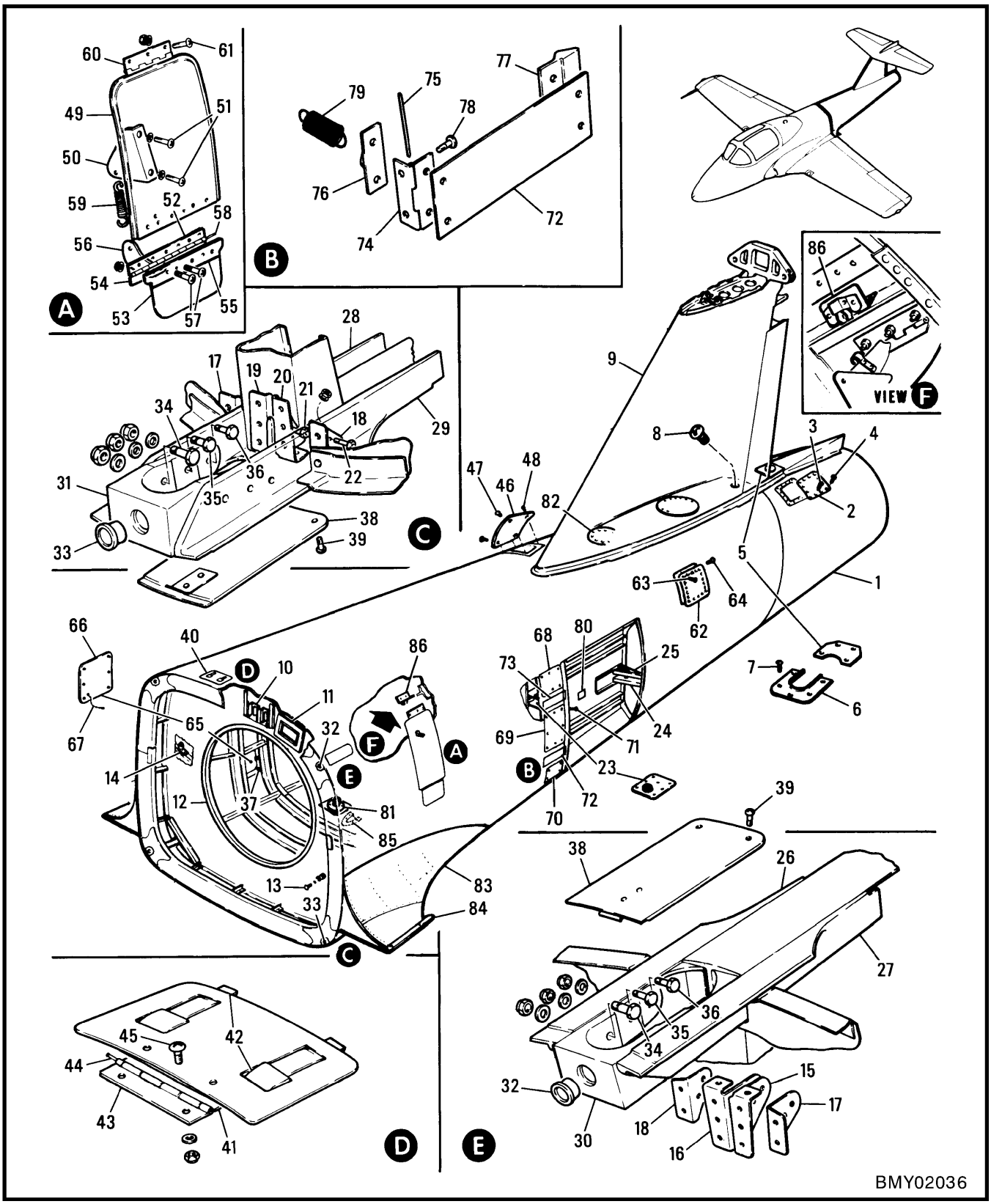

Figure 2-3-20 Aft Fuselage Structure

FIGURE AND INDEX NUMBER	GROUP FUSELAGE MAJOR ASSEMBLY AFT FUSELAGE STRUCTURE PART NUMBER	1 2 3 4 5 6 7 NOMENCLATURE	EFFEC-TIVITY	UNITS PER ASSY
2-3-20 -	41A-36002-802	FUSELAGE STRUCTURE GENL ASSY - AFT (I) (SEE FIG. 2-3-19)		1
	41A-36027	.FRAME INSTL - AFT FUS FIN TO AFT SPAR (SEE SECTION 12)		REF
	41A-42171	.BRACKET INSTL - FIRE DETECTOR WIRE CLIP (SEE SECTION 12)		REF
	41A-42173	.BRACKET INSTL - FIRE DETECTOR WIRE CLIP (SEE SECTION 12)		REF
- 1	41A-36065-800	.TAILCONE ASSY - AFT FUSELAGE (R)		1
	41A-36042	..HINGE INSTL - RUDDER (SEE SECTION 7)		REF
- 2	41A-36065-14	..PANEL - ACCESS (INTERCHANGEABLE)		1
- 3	MS35207-262	..SCREW		11
- 4	S1256CN1032-14	..SCREW - (V88308)		1
	MS24665-132	..COTTER PIN		1
- 5	41A-36065-68	..PLATE - COVER		1
- 6	41A-36065-66	..PLATE - COVER		1
- 7	MS35207-262	..SCREW		7
- 8	NAS226-8	.SCREW - (PLUG)		1
- 9	41A-21000	.STABILIZER ASSY - VERTICAL (SEE SECTION 2)		REF
	41A-36011	.FRAME INSTL - FS 314		NP
	41A-36011-2	..FRAME ASSY - FS 314		1
-10	41A-36011-120	...RETAINER - (RIVETED)		1
-11	41A-36063/S	...SEAL ASSY - ZONE 2 GROUND COOLING SYS		1
	MS35206-245	...SCREW		26
	AN960-8L	...WASHER		26
	MS21042L08	...NUT		26
R -12	AS151-18CAP1826A	...SEAL ASSY - (REF 41A-360011-106) (V48482)		1
	PB4395	...RIVET		64
	41A-36011-110	...ANGLE - (UPPER)		1
	41A-36011-108	...ANGLE - (LOWER)		1
-13	MS27039-4-04	...SCREW - (TOOLING HOLE BLANKING)		8
	AN960C416L	...WASHER		8
	MS21043-4	...NUT		8
-14	AN743-13	...BRACKET - (HARNESS)		2
-15	41A-36011-62	..CLIP - (UPPER)		2
-16	41A-36011-63	..CLIP - (UPPER)		2
-17	41A-36011-64	..CLIP		4
-18	41A-36011-65	..CLIP		4
-19	41A-36011-60	..CLIP - (LOWER)		2
-20	41A-36011-61	..CLIP - (LOWER)		2
-21	NAS1103-3	..BOLT		8
-22	NAS1103-6	..BOLT		16
	AN960PD10	..WASHER		24
	MS21042L3	..NUT		24
	41A-36005	.WELL INSTL - AFT FUS SPEEDBRAKE PORT		NP
	41A-36005-801	.WELL INSTL - AFT FUS SPEEDBRAKE STBD		NP
	41A-36005-10	..DIAPHRAGM ASSY - SPEEDBRAKE WELL LH		1
	41A-36005-11	..DIAPHRAGM ASSY - SPEEDBRAKE WELL RH		1
-23	41A-36062	...BEARING ASSY - SPEEDBRAKE HINGE		1
	41A-36062-2	....PLATE - SPEEDBRAKE HINGE BEARING		1
	NAS77-5-25	....BUSHING		1
	41A-36038	..FITTING ASSY - JACK ATTACHMENT LOWER LH		1
	41A-36038-1	..FITTING ASSY - JACK ATTACHMENT LOWER RH		12
-24	41A-36038-2	...FITTING - JACK ATTACHMENT LOWER LH		1
	41A-36038-3	...FITTING - JACK ATTACHMENT LOWER RH		1
	NAS77-8-25	...BUSHING		1
	41A-36039	..FITTING ASSY - JACK ATTACHMENT UPPER LH		1
	41A-36039-1	..FITTING ASSY - JACK ATTACHMENT UPPER RH		1

FIGURE AND INDEX NUMBER	GROUP FUSELAGE MAJOR ASSEMBLY AFT FUSELAGE STRUCTURE PART NUMBER	1 2 3 4 5 6 7 NOMENCLATURE	EFFEC-TIVITY	UNITS PER ASSY
2-3-20 -25	41A-36039-2	...FITTING - JACK ATTACHMENT UPPER LH		1
	41A-36039-3	...FITTING - JACK ATTACHMENT UPPER RH		1
	NAS77-8-25	...BUSHING		1
-26	41A-36030	.ANGLE - FUSELAGE JOINT UPPER LONGERON INBOARD LH		1
	41A-36030-1	.ANGLE - FUSELAGE JOINT UPPER LONGERON INBOARD RH		1
-27	41A-36031	.ANGLE - FUSELAGE JOINT UPPER LONGERON OUTBOARD LH		1
	41A-36031-1	.ANGLE - FUSELAGE JOINT UPPER LONGERON OUTBOARD RH		1
-28	41A-36032	.ANGLE - FUSELAGE JOINT LOWER LONGERON INBOARD LH		1
	41A-36032-1	.ANGLE - FUSELAGE JOINT LOWER LONGERON INBOARD RH		1
-29	41A-36033	.ANGLE - FUSELAGE JOINT LOWER LONGERON OUTBOARD LH		1
	41A-36033-1	.ANGLE - FUSELAGE JOINT LOWER LONGERON OUTBOARD RH		1
-30	41A-36034	.FITTING - FS 308 UPPER LONGERON LH		1
	41A-36034-1	.FITTING - FS 308 UPPER LONGERON RH		1
-31	41A-36035	.FITTING - FS 308 LOWER LONGERON LH		1
	41A-36035-1	.FITTING - FS 308 LOWER LONGERON RH		1
-32	41-30079-12	.BUSHING - FS 308 UPPER FITTING		2
-33	41-30079-10	.BUSHING - FS 308 LOWER FITTING		2
-34	NAS464P5A9	.BOLT - (FITTING RETAINING)		8
	AN960C516	.WASHER		8
	MS21042L5	.NUT		8
-35	NAS464P4A8	.BOLT		8
-36	NAS464P4A7	.BOLT		8
	AN960C416	.WASHER		16
	MS21042L4	.NUT		16
-37	244-16D	.RECEPTACLE - (V71286)		6
	41A-36002-122	.COVER ASSY - JOINT ATT BOLT ACCESS (I)		4
-38	41A-36002-134	..COVER - JOINT ATTACHMENT BOLT ACCESS		1
	41A-36002-136	..SPRING - JOINT ATT BOLT ACCESS COVER		1
-39	MS27039-1-12	..SCREW		8
	41A-36056	.DOOR INSTL - ENGINE IGNITOR ACCESS		NP
	41A-36056-2	..DOOR ASSY - ENGINE IGNITOR ACCESS (I)		1
-40	41A-36056-4	...DOOR - ENGINE IGNITOR ACCESS		1
	41A-36056-6	...PACKING - ENGINE IGNITOR DOOR HINGE		1
-41	41A-36056-8	...HALF HINGE - ENGINE IGNITOR DOOR		1
-42	H5000-2-040-081	...LATCH ASSY - (V83014)		2
-43	41A-36056-10	..HALF HINGE - ENGINE IGNITOR DOOR		1
-44	MS20253P2-225	..PIN		1
-45	MS27039-1-08	..SCREW		2
	AN960-10L	..WASHER		2
	MS21042L3	..NUT		2
-46	41A-36002-128	.DOOR - FLIGHT CONTROLS ACCESS (I)		1
-47	MS27039-1-08	.SCREW		17
-48	S1256CN1032-14	.SCREW - (V88308)		1
	MS24665-134	.COTTER PIN		1
	41A-36002-804	.DOOR ASSY - FIRE EXTINGUISHER ACCESS		1
-49	41A-36002-332	..DOOR - FIRE EXTINGUISHER UPPER		1
-50	41A-36002-320	..BRACKET ASSY		1
-51	NAS623-3-3	..SCREW		2
	AN960PD10L	..WASHER		2
-52	41A-36002-326	..HALF HINGE		1
-53	41A-36002-330	..DOOR - FIRE EXTINGUISHER LOWER		1
-54	41A-36002-328	..HALF HINGE		1
-55	NO NUMBER	..STRIP - REINFORCING		1

FIGURE AND INDEX NUMBER	GROUP FUSELAGE MAJOR ASSEMBLY AFT FUSELAGE STRUCTURE PART NUMBER		1 2 3 4 5 6 7 NOMENCLATURE	EFFEC-TIVITY	UNITS PER ASSY
2-3-20 -56	41A-36002-322		..BRACKET		1
-57	NAS623-3-3		..SCREW		2
	AN960PD10L		..WASHER		2
	MS21042L3		..NUT		2
-58	MS20253P2-500		..PIN - (DOOR HINGE)		1
-59	41A-36002-324		..SPRING		1
-60	41A-36002-310		..HINGE		1
-61	NAS623-3-2		.SCREW		3
	AN960PD10		.WASHER		3
	MS21042L3		.NUT		3
-62	41A-36002-126		.DOOR - RUDDER CONTROL ACCESS (I)		1
-63	MS27039-1-08		.SCREW		15
-64	S1256CN1032-14		.SCREW - (V88308)		1
	MS24665-134		.COTTER PIN		1
	41A-36002-194		.DOOR ASSY - JET PIPE ACCESS (I)		1
-65	41A-36002-130		..DOOR - JET PIPE ACCESS		1
	4002G		..GROMMET - (V71286)		6
	R4G		..SNAP RING - (V71286)		6
-66	40S5-2		..STUD - (V71286)		6
	S1191		..CLIP - (V88308)		1
-67	NAS1201C6B5		.CHAIN		1
	41A-36055		.DOOR INSTL - SPEEDBRAKE ACCESS		NP
-68	41A-36055-18		..DOOR - SPEEDBRAKE ACCESS LH (I)		1
	41A-36055-19		..DOOR - SPEEDBRAKE ACCESS RH (I)		1
-69	41A-36055-16		..DOOR - SPEEDBRAKE ACCESS LH (I)		1
	41A-36055-17		..DOOR - SPEEDBRAKE ACCESS RH (I)		1
-70	41A-36055-14		..DOOR - SPEEDBRAKE ACCESS LH (I)		1
	41A-36055-15		..DOOR - SPEEDBRAKE ACCESS RH (I)		1
-71	MS27039-1-07		..SCREW		36
	41A-36055-20		..DOOR ASSY - SPEEDBRAKE LOWER HINGE (I)		2
	41A-36055-34		..DOOR ASSY - SPEEDBRAKE UPPER HINGE (I)		2
-72	41A-36055-22		...DOOR - SPEEDBRAKE LOWER HINGE		1
-73	41A-36055-36		...DOOR - SPEEDBRAKE UPPER HINGE		1
-74	41A-36055-24		...HINGE		1
-75	MS20253P2-155		...PIN		1
-76	41A-36055-26		...ANGLE		1
-77	41A-36055-28		...STRIP - RUBBING		1
-78	NAS623-3-2		..SCREW		8
-79	41-31043		..SPRING - EXTENSION		4
-80	S1043		.NAMEPLATE - (V88308)		1
	41A-61315-12		.DRAIN INSTL - BOTTOM JET PIPE FUEL		NP
	41A-61315-2		..PLATE - JET PIPE DRAIN		1
-81	41-61014-2		..FITTING - JET PIPE DRAIN END		1
-82	41A-36002-132		.PLATE - COVER (RIVETED)		1
	41A-36006-38		.FAIRING INSTL - WING TO FUSELAGE PORT		NP
	41A-36006-1		.FAIRING INSTL - WING TO FUSELAGE STBD		NP
-83	41A-36006-32		..FAIRING ASSY - WING TO FUSELAGE PORT		1
-84	41A-36061-18		...PLATE - CABLE PROTECTING PORT		1
	41A-36006-27		..FAIRING ASSY - WING TO FUSELAGE STBD		1
-85	41A-35156-12	*	.SCOOP - AFT FUSELAGE DRAIN		23
	NO NUMBER	**	.BRACKET - FRICTION CATCH SUPPORT		1
	MS35206-228	**	.SCREW		2
-86	M9700	**	.CATCH - FRICTION		1
	MS35206-226	**	.SCREW		2
	MS21042L06	**	.NUT		2
			-000-		
		*	IAW C-12-114-000/CF-246		
		**	IAW C-12-114-000/CF-339		

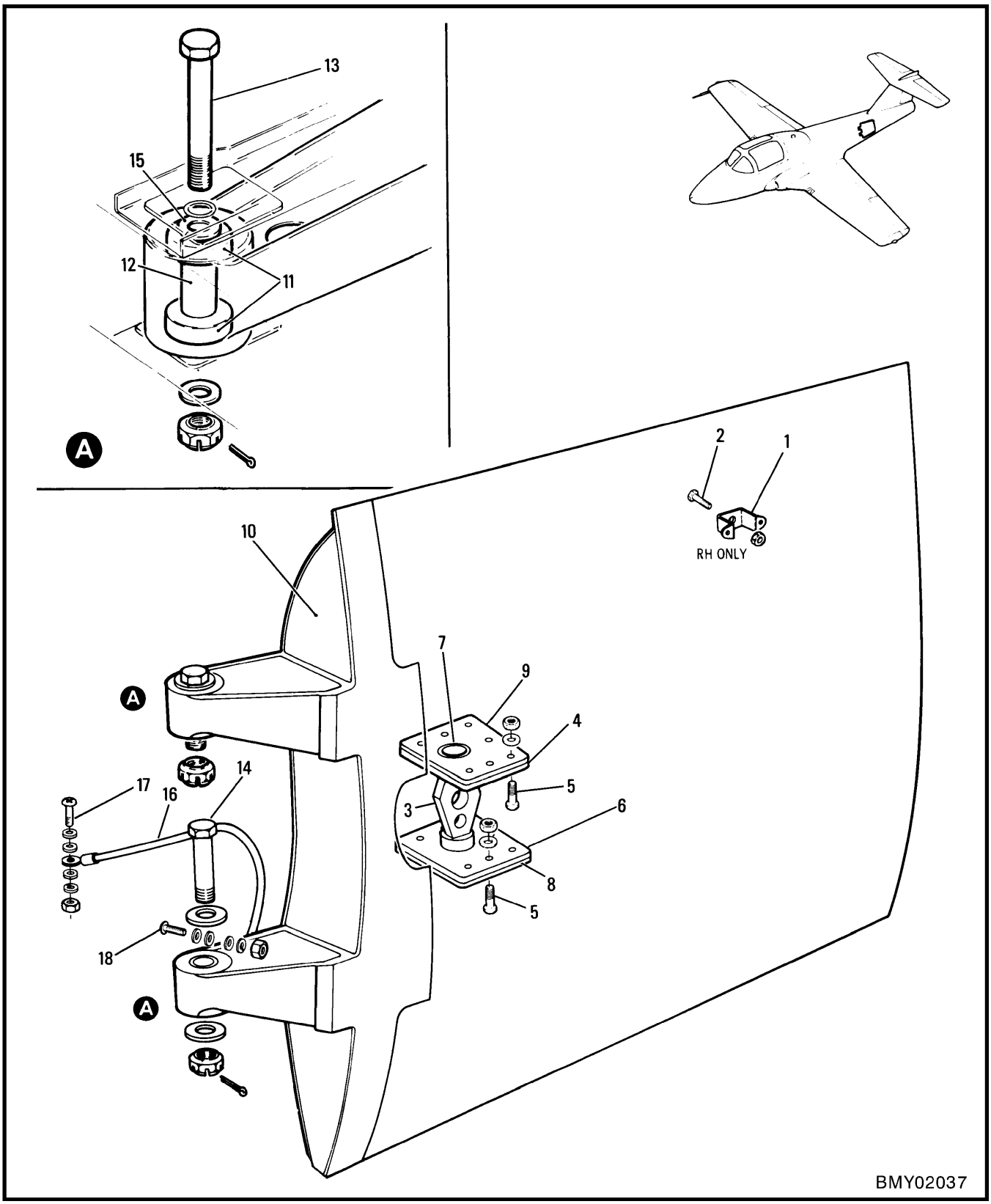

Figure 2-3-21 Aft Fuselage Speed Brakes

FIGURE AND INDEX NUMBER	GROUP FUSELAGE MAJOR ASSEMBLY AFT FUSELAGE SPEED BRAKES PART NUMBER	1 2 3 4 5 6 7 NOMENCLATURE	EFFEC-TIVITY	UNITS PER ASSY
2-3-21 -	41A-36057	SPEEDBRAKE INSTL - PORT (SEE FIG. 2-3-19)		NP
	41A-36057-1	SPEEDBRAKE INSTL - STBD		NP
	41A-36004	.SPEEDBRAKE ASSY - LH (INTERCHANGEABLE)		1
	41A-36004-1	.SPEEDBRAKE ASSY - RH (INTERCHANGEABLE)		1
	41A-36004-66	..BRACKET ASSY - SPEEDBRAKE (RH)		1
- 1	41A-36004-68	...BRACKET - SPEEDBRAKE (RH)		1
- 2	NAS428-3-5	...BOLT - (RH)		1
	AN345-10	...NUT - (RH)		1
- 3	41A-36052	..TRUNNION - SPEEDBRAKE		1
	41A-36053	..HOUSING ASSY - SPEEDBRAKE BEARING LH		1
	41A-36053-1	..HOUSING ASSY - SPEEDBRAKE BEARING RH		1
R - 4	41A-36053-2	...HOUSING - SPEEDBRAKE BEARING LH, OR		1
R	41A-36053-6	...HOUSING - SPEEDBRAKE BEARING LH		1
R	41A-36053-3	...HOUSING - SPEEDBRAKE BEARING RH, OR		1
R	41A-36053-7	...HOUSING - SPEEDBRAKE BEARING RH		1
R	NAS75-8-009	...BUSHING (FOR 41A-36053-2 OR 41A-36053-3), OR		2
R	41A-36053-10	...BUSHING (FOR 41A-36053-6 AND 41A-36053-7)		2
	41A-36054	..HOUSING ASSY - SPEEDBRAKE BEARING LH		1
	41A-36054-1	..HOUSING ASSY - SPEEDBRAKE BEARING RH		1
- 5	NAS6203-4	..BOLT		14
	AN960PD10	..WASHER		14
	MS21042L3	..NUT		14
R - 6	41A-36054-2	...HOUSING - SPEEDBRAKE BEARING LH, OR		1
R	41A-36054-6	...HOUSING - SPEEDBRAKE BEARING LH		1
R	41A-36054-3	...HOUSING - SPEEDBRAKE BEARING RH, OR		1
R	41A-36054-7	...HOUSING - SPEEDBRAKE BEARING RH		1
R - 7	NAS75-8-009	...BUSHING (FOR 41A-36054-2 OR 41A-36054-3), OR		2
R	41A-36054-10	...BUSHING (FOR 41A-36054-6 AND 41A-36054-7)		2
- 8	41A-36004-62	..SHIM		1
- 9	41A-36004-64	..SHIM		1
-10	41A-36051	..FITTING - SPEEDBRAKE DOOR LH		1
	41A-36051-1	..FITTING - SPEEDBRAKE DOOR RH		1
-11	MS27641-5	..BEARING		4
-12	NAS75-5-031	..BUSHING		2
-13	NAS6205-36D	.BOLT		1
	AN960PD516	.WASHER		1
	AN320-5	.NUT		1
	MS24665-134	.COTTER PIN		1
-14	NAS6205-38D	.BOLT		1
-15	S1236-516L	.WASHER - (V88308) (SHIM)		2
	S1236-516	.WASHER - (V88308) (SHIM)		9
	AN960PD516	.WASHER		1
	AN320-5	.NUT		1
	MS24665-134	.COTTER PIN		1
	NW4528142-1	JUMPER INSTL - BONDING (SEE SECTION 12)		REF
-16	M83413/8-A06BB	.JUMPER (PORT & STBD)		2
-17	MS35206-245	.SCREW		2
-18	MS35206-247	.SCREW		2
	AN960JD8L	.WASHER		8
	AN960-8L	.WASHER		4
	MS35338-42	.WASHER-LOCK		4
	MS21042L08	.NUT		4

-000-

SECTION 4

LANDING GEAR

TABLE OF CONTENTS

Figure	Title	Page
2-4-1	Landing Gears	2-4-2
2-4-2	Complete Landing Gear	2-4-4
2-4-3	Nose Landing Gear Shock & Drag Struts	2-4-8
2-4-4	Nose Wheel Steering	2-4-12
2-4-5	Nose Landing Gear Operating Mechanism	2-4-14
2-4-6	Nose Landing Gear Door	2-4-16
2-4-7	Main Landing Gear Shock Strut	2-4-18
2-4-8	Main Landing Gear Sidestay & Uplock	2-4-22
2-4-9	Main Landing Gear Operating Mechanism	2-4-26
2-4-10	Main Landing Gear Door	2-4-30
2-4-11	Main Landing Gear Leg Door & Latch Mechanism	2-4-34

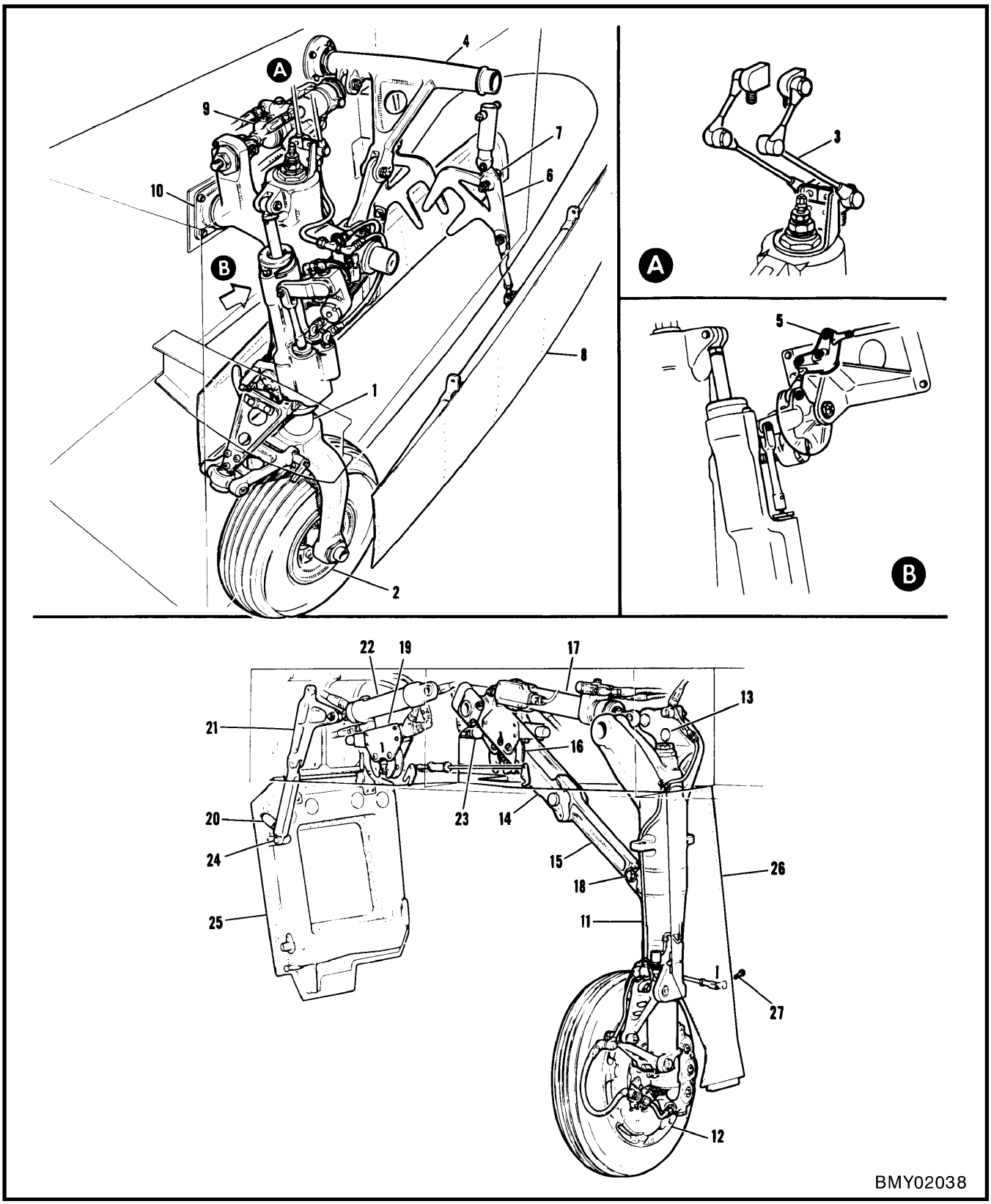

Figure 2-4-1 Landing Gears

FIGURE AND INDEX NUMBER	GROUP LANDING GEAR MAJOR ASSEMBLY LANDING GEARS PART NUMBER	1 2 3 4 5 6 7 NOMENCLATURE	EFFEC-TIVITY	UNITS PER ASSY
2-4-1 - 1	6500-7	STRUT ASSY - NOSE GEAR SHOCK (SEE FIG. 2-4-3)		REF
- 2	9533247	WHEEL ASSY - NOSE LDG/GR (SEE FIG. 2-4-3)		REF
- 3	3295000-4	SWIVEL ASSY - NOSE GEAR (SEE FIG. 2-4-3)		REF
- 4	41A-85006	STRUT ASSY - NOSE GEAR DRAG (SEE FIG. 2-4-3)		REF
- 5	41A-90372	LEVER ASSY - NOSE WHEEL STEERING (SEE FIG. 2-4-4)		REF
- 6	41A-85022	LEVER ASSY - CLAW (SEE FIG. 2-4-5)		REF
- 7	41A-85028	BOLT - N/GR DOOR MECH (SEE FIG. 2-4-5)		REF
- 8	41A-35125-800	DOOR ASSY - NOSE LDG/GRLH (SEE FIG. 2-4-6)		REF
- 9	3291000-7	ACTUATOR ASSY - NOSE LDG/GR (SEE SECTION 8)		REF
-10	LHSSR18A	BEARING ASSY - NOSE GEAR (SEE FIG. 2-4-2)		REF
-11	3288000-5A	STRUT ASSY - MAIN LANDING GEAR SHOCK (LH) (SEE FIG. 2-4-7)		REF
-12	9533231	WHEEL ASSY - MAIN LDG/GR (SEE FIG. 2-4-7)		REF
-13	41-87070-2	PIN - MAIN GEAR PIVOT (SEE FIG. 2-4-2)		REF
-14	41A-87532	SIDESTAY ASSY - MLG UPPER (SEE FIG. 2-4-8)		REF
-15	41A-87531-16	SIDESTAY ASSY - MLG LOWER (SEE FIG. 2-4-8)		REF
-16	41A-87508-808	UPLOCK ASSY - MAIN GEAR (LH) (SEE FIG. 2-4-8)		REF
-17	3290000	ACTUATOR ASSY - MAIN GEAR (SEE SECTION 8)		REF
-18	NAS1110-27D	BOLT - (SEE FIG. 2-4-2)		REF
-19	41A-87520-804	UPLOCK ASSY - MAIN GEAR DOOR (SEE FIG. 2-4-9)		REF
-20	41A-87556-4	HALF SPRING BOX - LDG/GR (SEE FIG. 2-4-9)		REF
-21	41A-87552	LEVER ASSY - MAIN GEAR DOOR (SEE FIG. 2-4-9)		REF
-22	3289000-1	ACTUATOR ASSY -M/LDG/GR DOOR (SEE SECTION 8)		REF
-23	100994-1	ACTUATOR ASSY - MAIN LANDING GEAR UPLOCK (SEE SECTION 8)		REF
-24	41A-87500-40	PIN - DOOR LINK TO WHEEL DOOR (SEE FIG. 2-4-2)		REF
-25	41A-10500	DOOR ASSY - MAIN LANDING GEAR (SEE FIG. 2-4-10)		REF
-26	41A-10550-802	DOOR ASSY - MAIN LDG/GR LEG (SEE FIG. 2-4-11)		REF
-27	MS20392-2C17	PIN - (LINK TO LEG DOOR) (SEE FIG. 2-4-2)		REF
		-000-		

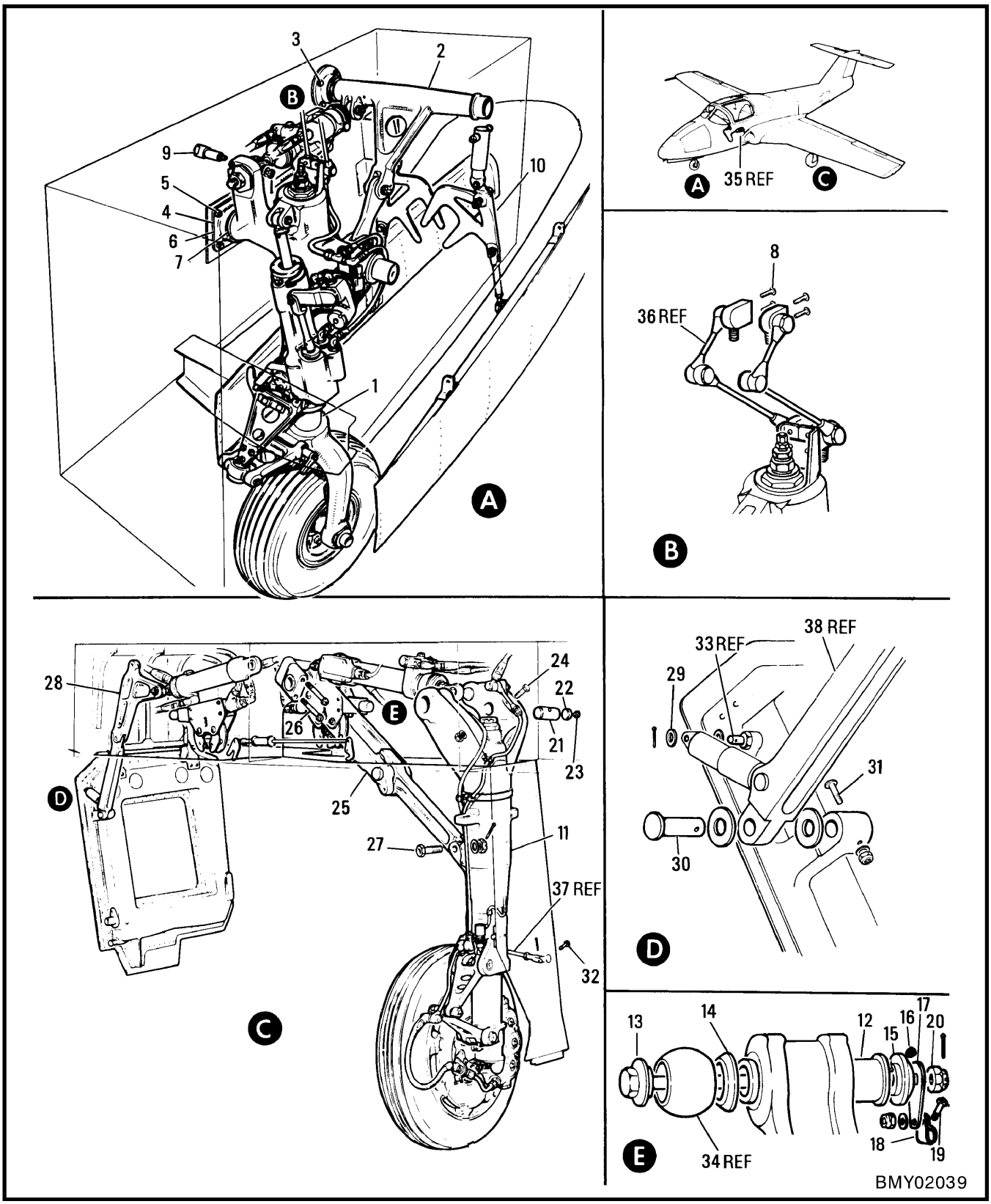

Figure 2-4-2 Complete Landing Gear

FIGURE AND INDEX NUMBER	GROUP LANDING GEAR MAJOR ASSEMBLY COMPLETE LANDING GEAR PART NUMBER	1 2 3 4 5 6 7 NOMENCLATURE	EFFEC-TIVITY	UNITS PER ASSY
2-4-2 -	41A-87500	LANDING GEAR INSTL - (MAIN & NOSE) (SEE FIG. 1)		NP
	41A-85000	.LANDING GEAR INSTL - NOSE		NP
- 1	41A-85021-82	..SHOCK STRUT ASSY - NOSE LANDING GEAR (SEE FIG. 2-4-3)		REF
- 2	41A-85006	..DRAG STRUT ASSY - NOSE LANDING GEAR (SEE FIG. 2-4-3)		REF
- 3	NAS624H7	..BOLT - (DRAG STRUT TO STRUCTURE)		8
- 4	LHSSR18A	..BEARING ASSY - (V73134) (NOSE GEAR) (IAW 41A-85001-6)		2
- 5	MS20005H7	..BOLT		8
- 6	41A-85036	..SHIM - NOSE GEAR LAMINATED		AR
- 7	41-85077	..WASHER - NOSE GEAR		2
- 8	AN501A10-7	..SCREW - (SWIVEL TO STRUCTURE)		4
- 9	41A-85018	..BOLT		1
	MS20002C8	..WASHER		1
	AN320-8	..NUT		1
	MS24665-289	..COTTER PIN		1
-10	41A-85023	..DOOR MECH INSTL - NOSE LANDING GEAR (SEE FIG. 2-4-5)		REF
-11	41A-87503	.SHOCK STRUT ASSY - MAIN LANDING GEAR (LH) (SEE FIG. 2-4-7)		REF
-12	41A-87566	.PIN - MLG PIVOT (FWD)		2
		OR		
	41-87069	.PIN		
-13	41A-87567	.BOLT - MAIN LANDING GEAR SPECIAL		2
-14	41A-87500-43	.WASHER - MLG PIVOT PIN		2
	41-87072	.WASHER ASSY - MLG GUIDE		2
-15	41-87072-2	..WASHER		1
-16	AN565F428H3	..SET SCREW		1
-17	41A-87500-45	.PLATE - WEIGHT SWITCH HARNESS		2
-18	MS21919WDG4	.CLAMP		2
-19	MS35207-261	.SCREW		2
	AN960-816L	.WASHER		2
	MS21042L3	.NUT		2
-20	AN310-8	.NUT		2
	MS24665-287	.COTTER PIN		2
	41-87070	.PIN ASSY - MLG PIVOT (AFT)		2
-21	41-87070-2	..PIN - MLG PIVOT		1
	41-87073	..PLUG ASSY - MLG		1
-22	41-87073-2	...PLUG -		1
-23	AN565F428H3	...SET SCREW		1
-24	NAS6204-44	.BOLT		2
	41A-87564	.SPACER - MAIN LANDING GEAR		2
	AN960PD416	.WASHER		2
	MS21042L4	.NUT		2
-25	41A-87506-818	.SIDESTAY ASSY - MLG (LH) (SEE FIG. 2-4-8)		REF
-26	NAS625H32	.BOLT - (SIDESTAY TO CROSS BEAM)		8
-27	NAS1110-27D	.BOLT - (SIDESTAY TO MAIN GEAR)		2
	MS20002C10	.WASHER - (UNDER HEAD)		2
	MS20002-10	.WASHER		2
	AN320-10	.NUT		2
	MS24665-357	.COTTER PIN		2
-28	41A-87509	.OPERATING MECHANISM INSTL - MLG DOOR (SEE FIG. 2-4-9)		REF
-29	AN960-416L	.WASHER - (SPRING BOX TO WHEEL DOOR)		4
	MS24665-136	.COTTER PIN		2
-30	41A-87500-40	.PIN - (DOOR LINK TO WHEEL DOOR)		2
	AN960-816L	.WASHER		4

FIGURE AND INDEX NUMBER	GROUP LANDING GEAR MAJOR ASSEMBLY COMPLETE LANDING GEAR PART NUMBER	1 2 3 4 5 6 7 NOMENCLATURE	EFFEC-TIVITY	UNITS PER ASSY
2-4-2 -31	MS51957-51	.SCREW (PIN LOCKING)		2
	AN960-8	.WASHER		2
	MS21042L08	.NUT		2
-32	MS20392-2C17	.PIN - (LINK TO LEG DOOR)		2
	AN960-10	.WASHER		2
	MS24665-134	.COTTER PIN		2
-33	41A-10512	PIVOT - SPRING (SEE FIG. 2-4-10)		REF
-34	AM1655	BEARING ASSY - M/LDG/GR (SEE SECTION 1)		REF
-35	41A-90020	VALVE CONTOL INSTL - LDG/GR EMERGENCY (SEE SECTION 8)		REF
-36	3295000-3	SWIVEL ASSY - (SEE FIG. 2-4-3)		REF
-37	41-87078	LINK ASSY - (SEE FIG. 2-4-7)		REF
-38	41A-87551	LEVER ASSY - (SEE FIG. 2-4-9)		REF
		-000-		

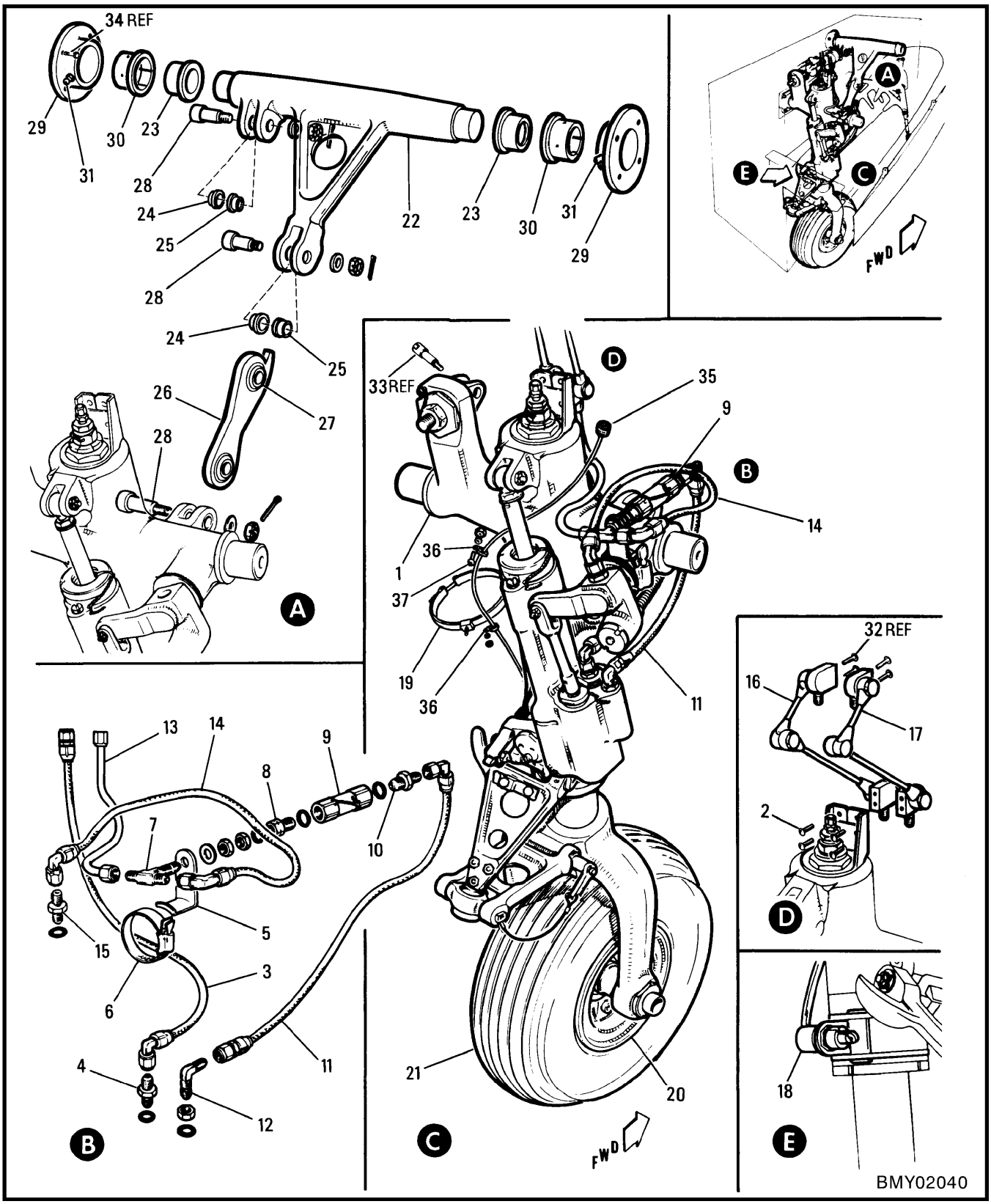

Figure 2-4-3 Nose Landing Gear Shock & Drag Struts

FIGURE AND INDEX NUMBER	GROUP LANDING GEAR MAJOR ASSEMBLY NOSE LANDING GEAR SHOCK & DRAG STRUTS PART NUMBER	1 2 3 4 5 6 7 NOMENCLATURE	EFFEC-TIVITY	UNITS PER ASSY
2-4-3 -	41A-85021-82	SHOCK STRUT ASSY - NOSE GEAR (MODIFIED) (SEE FIG. 2-4-2)		NP
	41A-85021-80	.SHOCK STRUT ASSY - NOSE GEAR (MODIFIED BY NW4528141-1)		1
- 1	6500-17	..SHOCK STRUT ASSY - (V02121) (IAW 41A-85005-14) FOR BRKDN SEE C-13-288-000/MS-000		1
- 2	AN501A10-7	..SCREW		4
- 3	AE1002406E0145	..HOSE ASSY - (V69705)		1
	MS28777-4	..RING		1
	MS28778-4	..PACKING		1
	AN6289D4	..NUT		1
- 4	MS21902D4	..UNION		1
	MS28778-4	..PACKING		1
- 5	41A-85029-6	..BRACKET - NOSE GEAR		1
- 6	AN737TW58	..CLAMP		1
- 7	MS21909-4	..TEE		1
	AN960D716	..WASHER		1
	AN924-4D	..NUT		1
	MS28778-4	..PACKING		1
- 8	AN893-2	..REDUCER		1
	41A-85021-50	..NUT		2
	MS28778-4	..PACKING		1
- 9	2R2065-6	..RESTRICTOR - (V26044)		1
	MS28778-6	..PACKING		2
-10	MS21916-6-4	..REDUCER		1
-11	AE1002406E0120	..HOSE ASSY - (V69705) (IAW C-12-114-000/NS-208)		1
-12	MS21926-4	..ELBOW		1
	MS28777-4	..RING		1
	MS28778-4	..PACKING		1
	AN6289D4	..NUT		1
-13	41A-42327-40	..LINE ASSY - NOSE WHEEL STEERING PRESSURE		1
-14	AE1826E0115-090	..HOSE ASSY - (V69705)		1
	AN960-716	..WASHER		1
-15	MS21902-4	..UNION		1
	MS28778-4	..PACKING		1
R -16	3295000-4	..SWIVEL ASSY - (V35962) (NOSE GEAR LH) (IAW 41A-85004-2)		1
R -17	3295000-3	..SWIVEL ASSY - (V35962) (NOSE GEAR RH) (IAW 41A-85004-3)		1
	MS28775-012	...PACKING		6
	30641-012	...SEAL		6
	41A-85021-29	..HARNESS ASSY - NOSE GEAR SHOCK STRUT (MODIFIED BY NW4528014-1)		1
-18	21EN9-6	...SWITCH ASSY - (V91929)		1
-19	901-275-1-5ASH	..CLAMP - (V75829)		1
	AN960-10L	..WASHER		1
	MS21042L3	..NUT		1
-20	9533247	.WHEEL ASSY - (V11066) (NOSE LANDING GEAR) (IAW 41A-85002-2) FOR BRKDN SEE C-13-171-000/MS-000		1
-21	NO NUMBER	.TIRE - TUBE TYPE (2620-21-845-7820)		1
	NO NUMBER	.INNER TUBE (2620-00-288-0246)		1

FIGURE AND INDEX NUMBER	GROUP LANDING GEAR MAJOR ASSEMBLY NOSE LANDING GEAR SHOCK & DRAG STRUTS PART NUMBER	1 2 3 4 5 6 7 NOMENCLATURE	EFFEC-TIVITY	UNITS PER ASSY
2-4-3 -	41A-85006	DRAG STRUT ASSY - NOSE GEAR (MODIFIED) (SEE FIG. 2-4-2)		1
	41A-85010	.LEVER ASSY - NOSE LANDING GEAR (FOR SPARES ORDER 41A-85010-800 OR 41A-85010-802)		1
		OR		
	41A-85010-800	.LEVER ASSY - (SPARE FOR 41A-85010)		
		OR		
	41A-85010-802	.LEVER ASSY - (SPARE FOR 41A-85010)		
-22	41A-85010-2	..LEVER - NOSE LANDING GEAR		1
-23	41A-85013	..BUSHING - NOSE LANDING GEAR		2
-24	41A-85009	..BUSHING - NOSE LANDING GEAR	001-010	2
	41A-85009-2	..BUSHING - NOSE LANDING GEAR	011-	2
-25	41A-85012	..BUSHING - NOSE LANDING GEAR	001-010	2
	41A-85012-2	..BUSHING - NOSE LANDING GEAR	011-	2
	41A-85020-14	.LEVER ASSY - NOSE GEAR (FOR SPARES ORDER 41A-85020-18)		1
-26	41A-85020-2	..LEVER - NOSE GEAR		1
-27	LHSSR-8	..BEARING - (V73134)		2
-28	41A-85018	.BOLT		3
	MS20002C8	.WASHER		3
	AN320-8	.NUT		3
R	MS24665-287	.COTTER PIN		3
	41A-85016	.BRACKET ASSY - NOSE GEAR (DRAG STRUT)		2
-29	41A-85016-2	..BRACKET - NOSE GEAR (DRAG STRUT)		1
-30	41A-85014	..BUSHING - NOSE LANDING GEAR		1
-31	MS15001-1	..FITTING		1
-32	AN501A10-7	SCREW - (SEE FIG. 2-4-2)		REF
-33	41A-85018	BOLT - (SEE FIG. 2-4-2)		REF
-34	NAS624H7	BOLT - (SEE FIG. 2-4-2)		REF
	NW4528200-1	WIRING INSTL - NOSE (MODIFYING 41A-85021-80) (SEE SECTION 12)		REF
	NW4528324-1	.HARNESS ASSY - FUSELAGE/NOSE (MODIFYING 41A-85021-29) (SEE SECTION 12)		REF
-35	MS3476L12-10P	..CONNECTOR - (PIOG)		1
-36	MS21919WDG7	.CLAMP		2
-37	MS35206-245	.SCREW		1
	NAS1149FN816P	.WASHER		1

-000-

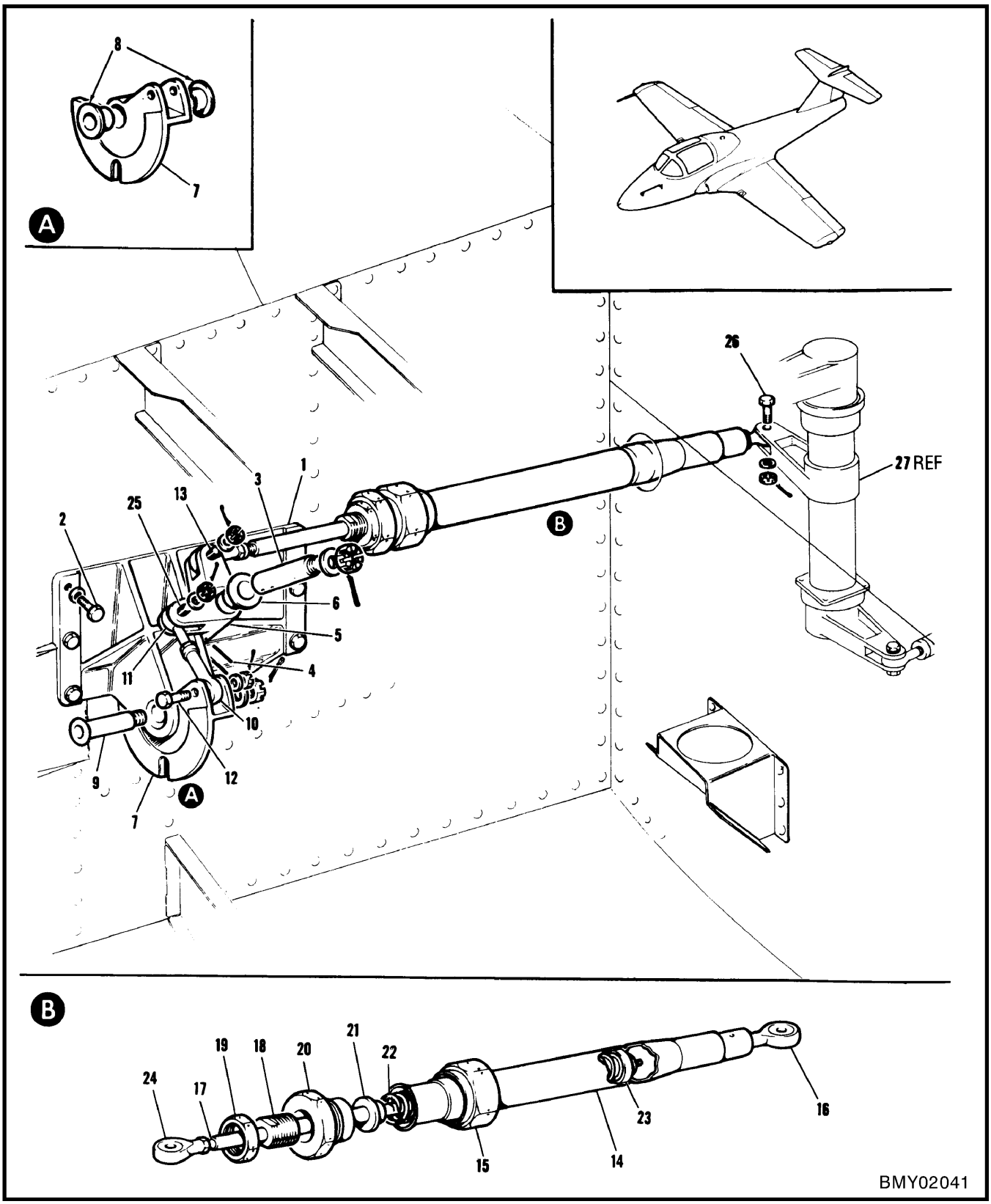

Figure 2-4-4 Nose Wheel Steering

FIGURE AND INDEX NUMBER	GROUP LANDING GEAR MAJOR ASSEMBLY NOSE WHEEL STEERING PART NUMBER	1 2 3 4 5 6 7 NOMENCLATURE	EFFEC-TIVITY	UNITS PER ASSY
2-4-4 -	41A-90370	STEERING INSTL - NOSE WHEEL (SEE SECTION 3)		NP
- 1	41A-90373-2	.MOUNTING - NOSE WHEEL STEERING LEVER		1
- 2	AN3-7A	.BOLT		6
	AN960PD10	.WASHER		6
- 3	41A-90379	.STUD - NOSE WHEEL STEERING		1
- 4	NAS561P3-18	.PIN		2
	41A-90372	.LEVER ASSY - NOSE WHEEL STEERING		1
- 5	41A-90372-2	..LEVER - NOSE WHEEL STEERING		1
- 6	FF600-5	..BUSHING - (V70417) (NOSE STEERING LEVER)		2
	AN960PD616	.WASHER		1
	AN320-6	.NUT		1
	MS24665-285	.COTTER PIN		1
	41A-90371	.PLATE ASSY - NOSE WHEEL STEERING CAM		1
- 7	41A-90371-2	..PLATE - NOSE WHEEL STEERING CAM		1
- 8	FF600-5	..BUSHING - (V70417) (NOSE STEERING CAM PLATE)		2
- 9	41A-90380	.BOLT - NOSE WHEEL STEERING SPECIAL		1
	AN960PD616	.WASHER		1
	AN320-6	.NUT		1
	MS24665-132	.COTTER PIN		1
-10	F34-14	.ROD END - (V73134)		1
-11	M34-14	.ROD END - (V73134)		1
	AN316-4R	.NUT		1
-12	NAS1103-12D	.BOLT		1
-13	NAS1103-14D	.BOLT		1
	AN960PD10	.WASHER		2
	AN320-3	.NUT		2
	MS24665-132	.COTTER PIN		2
	41A-90378-800	.BUNGEE ASSY - NOSE WHEEL STEERING	001-089	1
	41A-90378-850	.BUNGEE ASSY - NOSE WHEEL STEERING	090-	1
-14	41A-90378-38	..TUBE - NOSE WHEEL STEERING BUNGEE		1
	MS20819-16	..SLEEVE		1
-15	41A-90378-16	..NUT		1
-16	MS21152-1	..ROD END		1
	MS24692-153	..PIN		2
-17	41A-90375	..ROD - NOSE WHEEL STEERING		1
	41A-90378-4	..SPACER		1
	NAS561P2-7	..PIN		2
-18	41A-90377	..SLEEVE - NOSE WHEEL STEERING ADJUSTING		1
-19	41A-90378-20	..NUT		1
-20	41A-90374	..NUT - NOSE WHEEL STEERING RETAINING		1
-21	41A-90376-6	..END CAP - NOSE WHEEL STEERING		1
	S1242-7	..WASHER - (V88308)		2
-22	41A-90364	..SPRING - COMPRESSION		1
-23	41A-90376-2	..END CAP - NOSE WHEEL STEERING		1
	AN960XD416	..WASHER		1
	AN320-4	..NUT		1
	S1242-7	..WASHER - (V88308)		2
	MS24665-134	..COTTER PIN		1
	NAS509-4	..NUT		1
-24	F34-14	..ROD END - (V73134)		1
-25	NAS1103-14D	.BOLT		1
-26	NAS1103-12D	.BOLT		1
	AN960PD10	.WASHER		2
	AN320-3	.NUT		2
	MS24665-132	.COTTER PIN		2
-27	41A-90233-2	LEVER - NOSE WHEEL STEERING (SEE SECTION 7)		REF

-000-

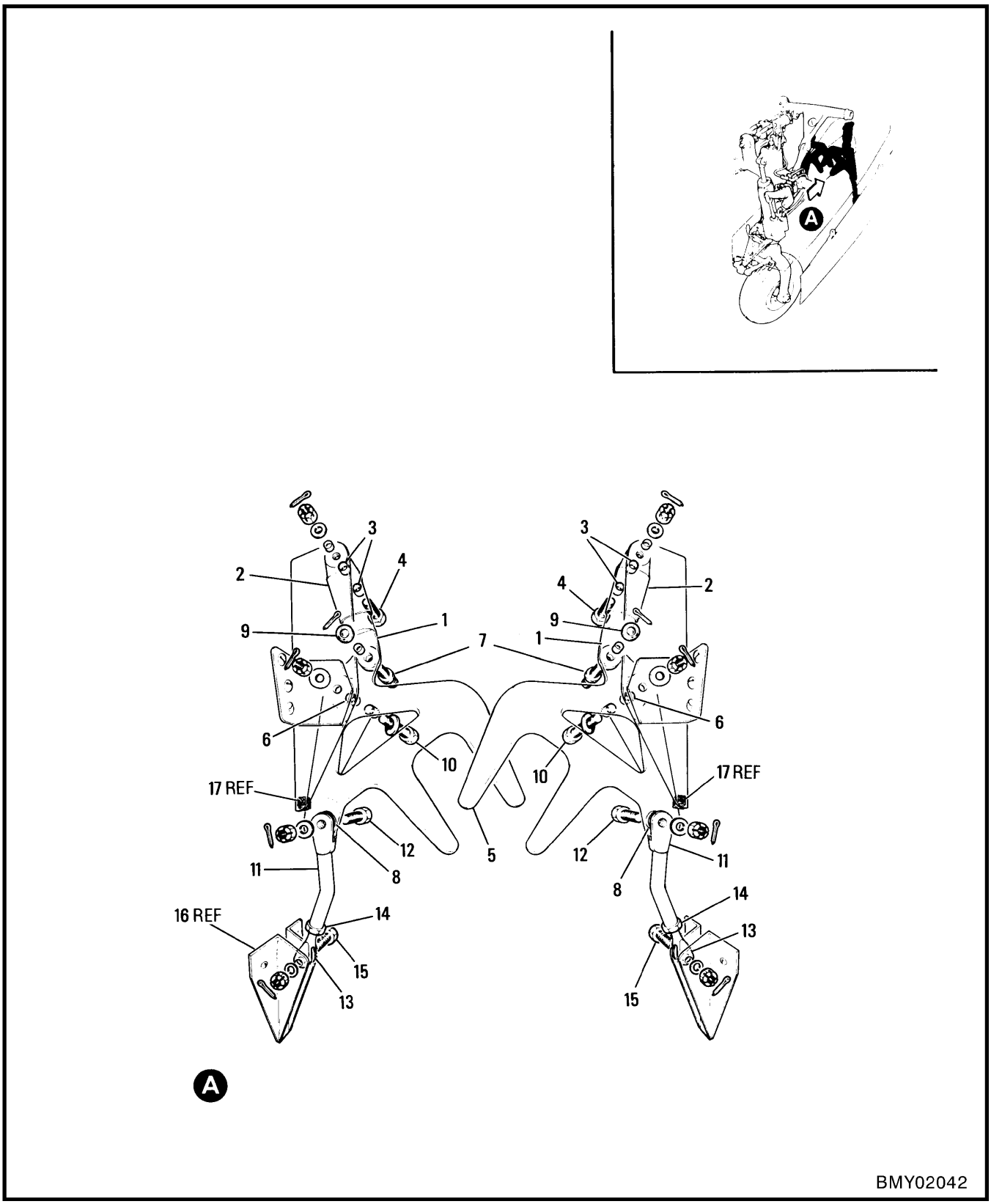

Figure 2-4-5 Nose Landing Gear Door Operating Mechanism

FIGURE AND INDEX NUMBER	GROUP LANDING GEAR MAJOR ASSEMBLY NOSE LANDING GEAR DOOR OPERATING MECHANISM PART NUMBER	1 2 3 4 5 6 7 NOMENCLATURE	EFFEC-TIVITY	UNITS PER ASSY
2-4-5 -	41A-85023	DOOR MECHANISM INSTL - NOSE GEAR		NP
- 1	41A-87557-4	.HALF SPRING BOX - LANDING GEAR		2
	41A-87556-6	..BUSHING		1
	41A-87558	.SPRING - SPRING BOX COMPRESSION		2
- 2	41A-87556-4	.HALF SPRING BOX - LANDING GEAR		2
	41A-87556-6	..BUSHING		1
- 3	NAS43DD4-35	.SPACER		4
- 4	NAS6204-22D	.BOLT		2
	AN960-416	.WASHER		2
	AN320-4	.NUT		2
	MS24665-136	.COTTER PIN		2
	41A-85022-12	.LEVER ASSY - CLAW		2
- 5	41A-85022-14	..LEVER - CLAW		2
- 6	41A-85025	..BUSHING		2
- 7	41A-85024	..STUD - NOSE GEAR (CLAW LEVER)		2
- 8	ADB4V	..BEARING - (V83086)		2
- 9	AN960-416	.WASHER		2
	MS24665-136	.COTTER PIN		2
-10	41A-85028	.BOLT - NOSE GEAR DOOR MECHANISM		2
	AN960-616	.WASHER - (UNDER BOLT HEAD)		2
	AN960-416	.WASHER		2
	AN320-4	.NUT		2
	MS24665-136	.COTTER PIN		2
-11	41A-85026-2	.FORK END - NOSE GEAR		2
-12	NAS6204-10D	.BOLT		2
	AN960-416	.WASHER		2
	AN320-4	.NUT		2
	MS24665-136	.COTTER PIN		2
-13	HMR4M	.ROD END - (V73134)		2
-14	NAS509-4	.NUT		2
-15	NAS6204-12D	.BOLT		2
	AN960-416	.WASHER		2
	AN320-4	.NUT		2
	MS24665-136	.COTTER PIN		2
-16	41A-35183	BRACKET - NOSE GEAR DOOR OPERATING MECH (SEE FIG. 2-4-6)		REF
-17	41A-35070-70	PAD - RUBBER (SEE SECTION 3)		REF

-000-

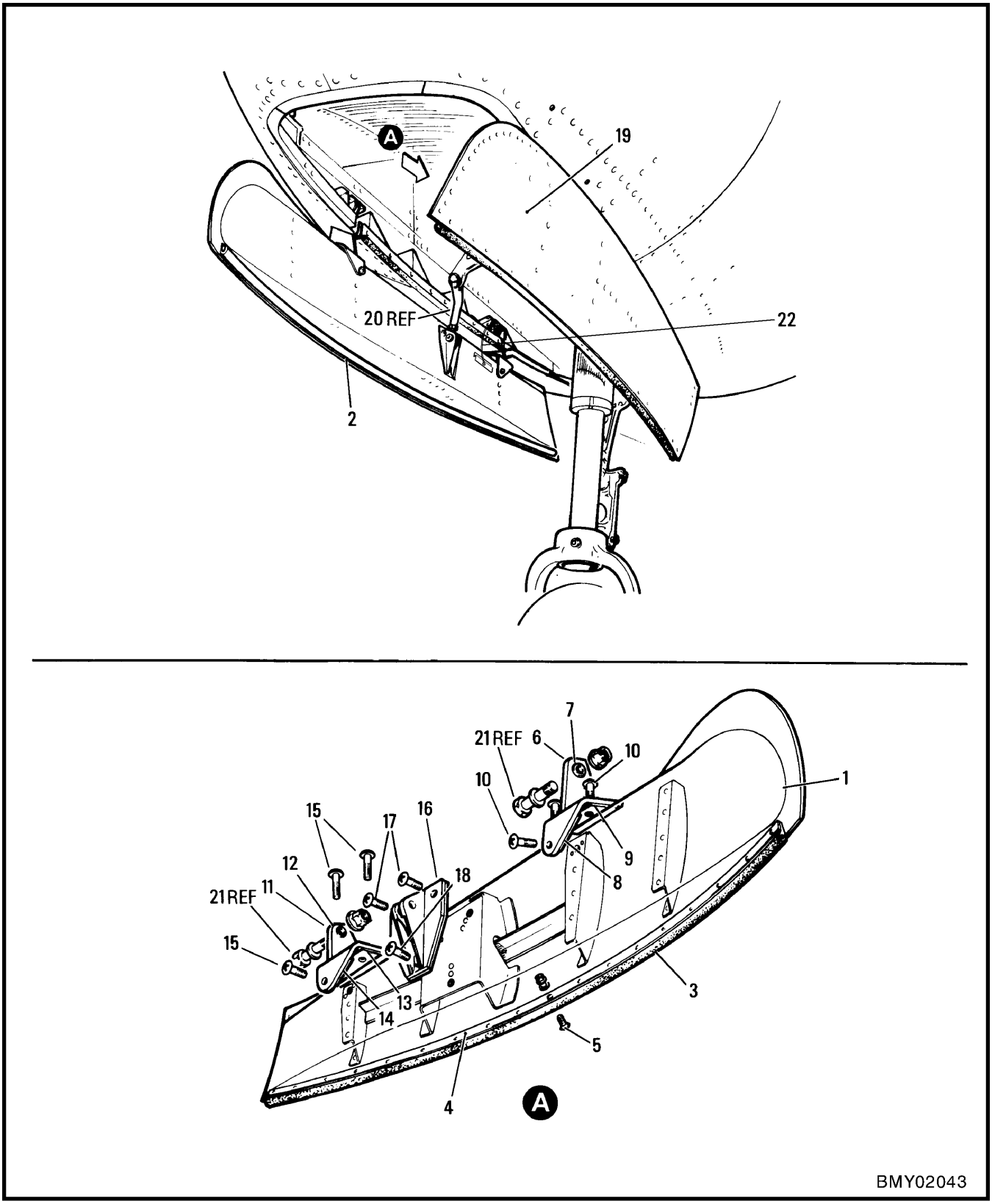

Figure 2-4-6 Nose Landing Gear Door

FIGURE AND INDEX NUMBER	GROUP LANDING GEAR MAJOR ASSEMBLY NOSE LANDING GEAR DOOR PART NUMBER	1 2 3 4 5 6 7 NOMENCLATURE	EFFEC-TIVITY	UNITS PER ASSY
2-4-6 -	41A-35125-800	DOOR ASSY - NOSE LANDING GEAR LH (I) (SEE SECTION 3)		1
	41A-35125-801	DOOR ASSY - NOSE LANDING GEAR RH (I)		1
- 1	41A-35125-2	.DISH ASSY - NOSE LANDING GEAR DOOR LH		1
	41A-35125-3	.DISH ASSY - NOSE LANDING GEAR DOOR RH		1
- 2	41A-35125-34	.STOPPER - NOSE LANDING GEAR DOOR (RH)		1
- 3	41A-35125-36	.SEAL - NOSE GEAR DOOR (LH)		1
- 4	41A-35125-32	.RETAINER - NOSE GEAR DOOR SEAL (LH)		1
- 5	MS24693S26	.SCREW - (LH)		17
	AN960PD6L	.WASHER - (LH)		17
	MS21042L06	.NUT - (LH)		17
	41A-35181-6	.BRACKET ASSY - NOSE GEAR DOOR HINGE LH		1
	41A-35181-7	.BRACKET ASSY - NOSE GEAR DOOR HINGE RH		1
- 6	41A-35181-8	..BRACKET - HINGE (LH)		1
	41A-35181-9	..BRACKET - HINGE (RH)		1
- 7	ADB4V	..BEARING - (V83086)		1
- 8	41A-35125-54	.SHIM - N/GR DOOR BRACKET		AR
- 9	41A-35125-56	.SHIM - N/GR DOOR BRACKET		AR
-10	MS27039-1-14	.SCREW		3
	41A-35182-6	.BRACKET ASSY - NOSE GEAR DOOR HINGE LH		1
	41A-35182-7	.BRACKET ASSY - NOSE GEAR DOOR HINGE RH		1
-11	41A-35182-8	..BRACKET - HINGE (LH)		1
	41A-35182-9	..BRACKET - HINGE (RH)		1
-12	ADB4V	..BEARING - (V83086)		1
-13	41A-35125-54	.SHIM - N/GR DOOR BRACKET		AR
-14	41A-35125-56	.SHIM - N/GR DOOR BRACKET		AR
-15	MS27039-1-14	.SCREW		3
-16	41A-35183	.BRACKET - NOSE GEAR DOOR OPERATING MECH LH		1
	41A-35183-1	.BRACKET - NOSE GEAR DOOR OPERATING MECH RH		1
	41A-35125-52	.SHIM - NOSE GEAR DOOR BRACKET (LH)		1
	41A-35125-50	.SHIM - NOSE GEAR DOOR BRACKET (RH)		1
-17	MS27039-1-11 *	.SCREW		2
-18	MS27039-1-15	.SCREW		1
-19	41A-35125-12	.SKIN - NOSE GEAR DOOR LH		1
	41A-35125-13	.SKIN - NOSE GEAR DOOR RH		1
-20	41A-85026	FORK END - (SEE FIG. 2-4-5)		REF
-21	NAS6204-10	BOLT - (DOOR TO FUSELAGE) (SEE SECTION 3)		REF
	NW4528142-1	JUMPER INSTL - BONDING		1
-22	M83413/8-A06BB	.JUMPER ASSY		1
	M23053/5-104-9	.SLEEVING - INSULATION		AR
	MS35207-264	.SCREW		2
	AN960JD10L	.WASHER		4
	AN960-10L	.WASHER		2
	MS35338-43	.WASHER		2
	MS21042L3	.NUT		2
		-000-		
	*	IAW C-12-114-000/CS-014		

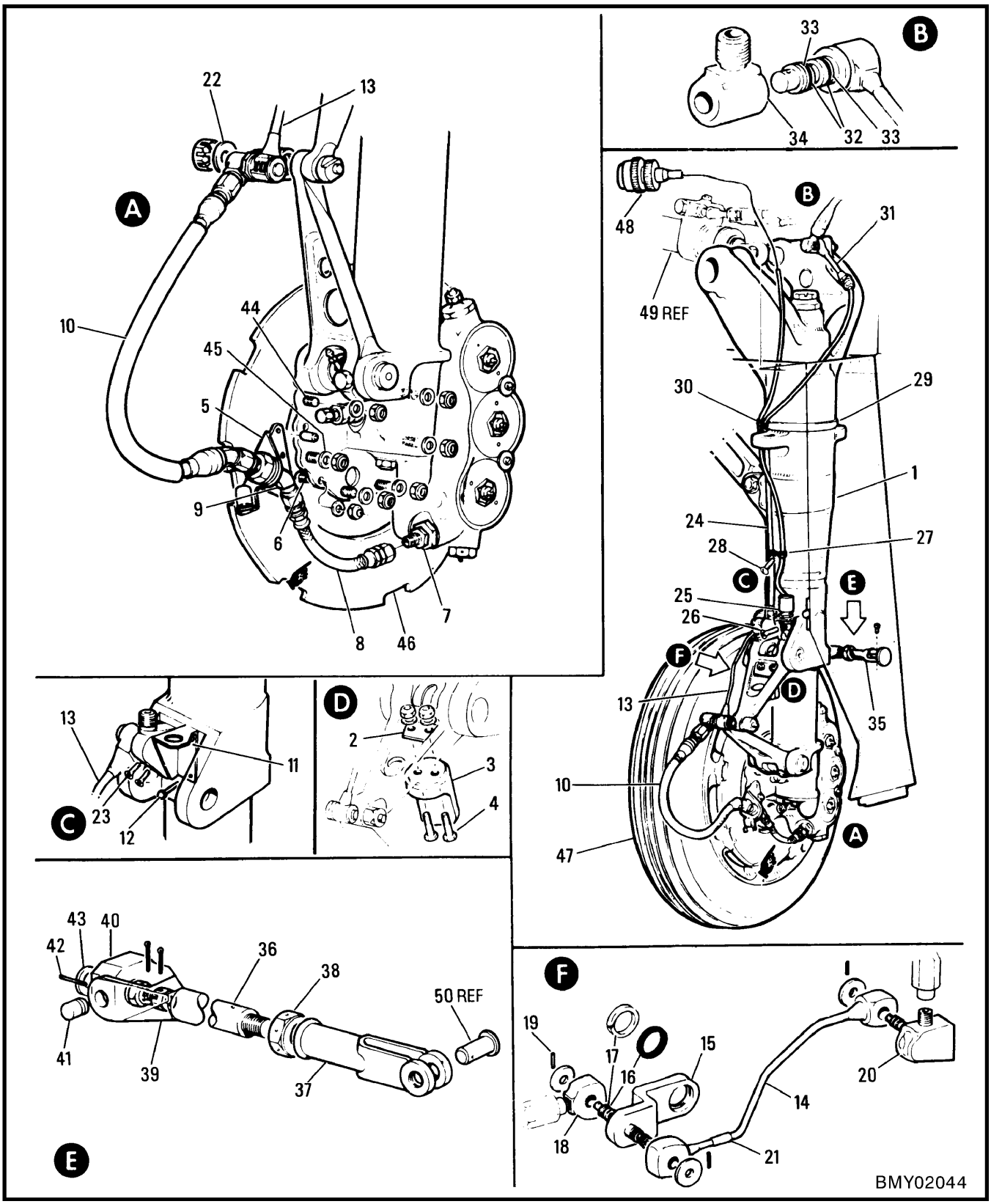

Figure 2-4-7 Main Landing Gear Shock Strut

FIGURE AND INDEX NUMBER	GROUP LANDING GEAR MAJOR ASSEMBLY MAIN LANDING GEAR SHOCK STRUT PART NUMBER		1 2 3 4 5 6 7 NOMENCLATURE	EFFEC-TIVITY	UNITS PER ASSY
2-4-7 -	41A-87503		STRUT ASSY - MAIN LANDING GEAR SHOCK PORT		NP
- 1	3288000-5A		.STRUT ASSY - (V35962) (M/LDG/GR SHOCK LH) (FOR BRKDN SEE C-13-264-000/MS-000)		1
	3288000-6A		.STRUT ASSY - (V35962) (M/LDG/GR SHOCK RH) (FOR BRKDN SEE C-13-264-000/MS-000)		1
- 2	41A-87503-950		.PLATE		1
- 3	41A-87503-952		.BLOCK - FIBRE		1
- 4	AN3-5A		.SCREW		2
	AN960PD10		.WASHER		2
	MS20500-1032		.NUT		2
- 5	41A-87562		.BRACKET ASSY - STATIC ARRESTOR LH		1
	41A-87562-1		.BRACKET ASSY - STATIC ARRESTOR RH		1
- 6	MS24694-54		.SCREW		1
	AN960-10L		.WASHER		1
	MS21042L3		.NUT		1
- 7	MS21902-4		.UNION		1
	MS28778-4		.PACKING		1
- 8	AE1002256E0047	*	.HOSE ASSY - (V69705) M/LDG/GR BRAKE PRESS.		1
- 9	MS21907-4		.ELBOW		1
	AN960PD716		.WASHER		2
	AN924-4D		.NUT		1
-10	AE1011105E0160		.HOSE ASSY - (V69705)		1
-11	41A-87565-10		.BRACKET ASSY - SWITCH & BRAKE SWIVEL LH		1
	41A-87565-11		.BRACKET ASSY - SWITCH & BRAKE SWIVEL RH		1
-12	AN501A10-6		.SCREW		3
-13	3302000-1		.SWIVEL ASSY - (V35962) (MAIN GEAR BRAKE LH) (IAW 41A-87570)		1
	3302000-2		.SWIVEL ASSY - (V35962) (MAIN GEAR BRAKE RH) (IAW 41A-87570-1)		1
-14	3295018-1		..ELBOW ASSY - UNIVERSAL LH		1
	3295018-2		..ELBOW ASSY - UNIVERSAL RH		1
-15	3302017-1		..POST ASSY - BRACKET		1
-16	MS28778-4		..PACKING		6
-17	S30641-012		..SEAL		6
-18	3294011-1		..SWIVEL - UNIVERSAL ELBOW THREADED		1
	AN960-616L		..WASHER		3
-19	MS171467		..PIN		3
-20	3295014-1		..POST - SWIVEL LH		1
	3295014-2		..POST - SWIVEL RH		1
-21	3294019-5		..DECALCOMANIA - IDENTIFICATION		1
-22	AN960C916L		.WASHER		1
-23	MS24694-49		.SCREW		2
-24	41A-75201-10		.LINE ASSY - M/LDG/GR BRAKE PRESS. (PORT)		1
	41A-75201-12		.LINE ASSY - M/LDG/GR BRAKE PRESS. (STBD)		1
	41A-87503-37		.HARNESS ASSY - M/LDG/GR SHOCK STRUT (MODIFIED BY NW4528141-5 & -6)		1
-25	S1419-1		..SWITCH ASSY- (V88308) (M/LDG/GR SHOCK STRUT)		1
-26	MS24693-269		.SCREW		1
-27	MS21919WDG4		.CLAMP		2
-28	MS35207-261		.SCREW		1
		*	IAW C-12-114-000/CF-472		

FIGURE AND INDEX NUMBER	GROUP LANDING GEAR MAJOR ASSEMBLY MAIN LANDING GEAR SHOCK STRUT PART NUMBER		1 2 3 4 5 6 7 NOMENCLATURE	EFFEC-TIVITY	UNITS PER ASSY
2-4-7 -	AN960PD10L		.WASHER		1
	MS21042L3		.NUT		1
-29	16505-420-1		.CLAMP ASSY - (V75829)		1
-30	MS21919WDG4		.CLAMP		2
	AN960PD10L		.WASHER		1
	MS21042L3		.NUT		1
-31	3297000-1		.SWIVEL ASSY - (V35962) (M/LDG/GR BRAKE LINE JOINT) (IAW 41A-87504)		1
-32	MS28775-012		..PACKING		2
-33	30641-012		..SEAL		2
-34	3294011-1		..ELBOW - (V35962) (UNIVERSAL SWIVEL)		1
	AN960PD716		.WASHER		1
	NAS679A7		.NUT		1
-35	41-87078-800		.LINK ASSY - MAIN GEAR DOOR CONN PORT	001-050	1
	41-87078-801		.LINK ASSY - MAIN GEAR DOOR CONN STBD	001-050	1
	41-87078-802		.LINK ASSY - MAIN GEAR DOOR CONNECTING	051-120	1
	41-87078-804		.LINK ASSY - MAIN GEAR DOOR CONNECTING	121-	1
-36	41A-87525		..ROD - MAIN LANDING GEARDOOR		1
-37	41-87078-16		..CLEVIS	001-120	1
	41-87078-22		..CLEVIS	121-	1
-38	NAS509-4		..NUT		1
-39	41A-87524		..FORK PIVOT - M/LDG/GR CONN LINK PORT	001-050	1
	41A-87524-1		..FORK PIVOT - M/LDG/GR CONN LINK STBD	001-050	1
	41A-87524-804		..FORK PIVOT - M/LDG/GR CONNECTING LINK	051-	1
-40	41-87080		..LUG - MAIN LANDING GEAR PIVOT	001-050	1
	41-87080-800		..LUG - MAIN LANDING GEAR PIVOT	051-	1
-41	41-87081		..PIN - MAIN LANDING GEAR		2
-42	NAS561P4-8		..PIN		2
	AN320-4		..NUT		1
	MS24665-134		..COTTER PIN		1
-43	AN960PD616		.WASHER		AR
	AN960PD516		.WASHER		1
	AN320-5		.NUT		1
	MS24665-136		.COTTER PIN		1
-44	NAS1005-10A		.BOLT - (WHEEL RETAINING)		6
-45	AN960PD516		.WASHER		1
	MS20500-524		.NUT		6
-46	5006305	*	.WHEEL ASSY - (V11066) (MAIN LANDING GEAR)		1
	5006306-2		.BRAKE ASSY - (V11066) (MAIN LANDING GEAR)		1
-47	MIL-T-5041		.TIRE - MAIN WHEEL 20 X 4.4 10 PR TYPE VII (G.S.M.) TUBELESS 2620-00-177-7319		1
	NW4528200-5		WIRING INSTL - LH WING FILLET (SEE SECTION 12)		REF
	NW4528200-6		WIRING INSTL - RH WING FILLET (SEE SECTION 12)		REF
	NW4528400-1		.HARNESS ASSY - LH WING (SEE SECTION 12)		REF
	NW4528401-1		.HARNESS ASSY - RH WING (SEE SECTION 12)		REF
-48	MS3476L12-10P		..CONNECTOR - (P6G & P16G)		1
-49	3290000		ACTUATOR ASSY - M/LDG/GR (SEE SECTION 8)		REF
-50	MS20392-2C17		PIN - (LINK TO LEG DOOR) (SEE FIG. 2-4-2)		REF
			-000-		
		*	IAW C-12-114-000/CF-465		

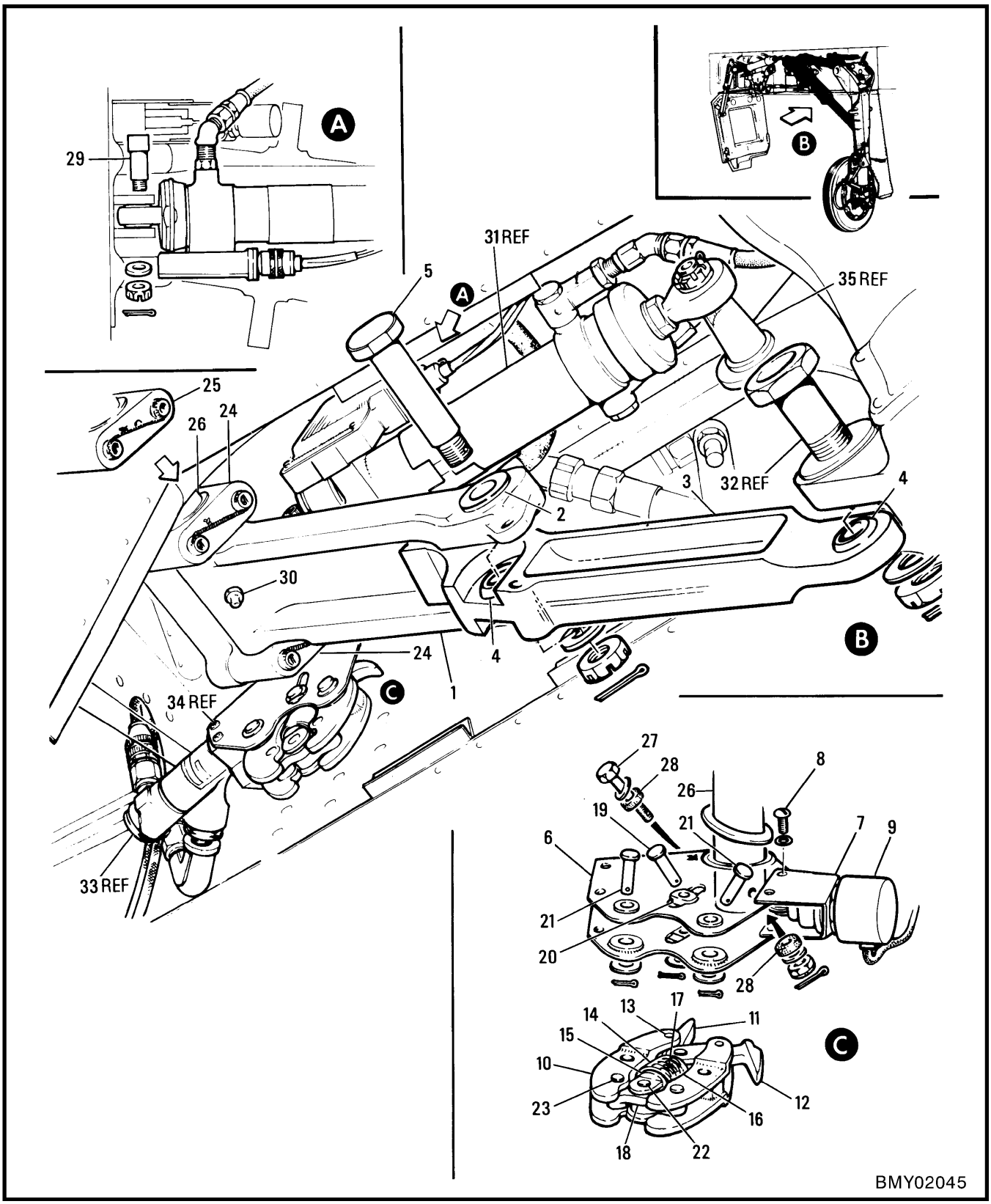

Figure 2-4-8 Main Landing Gear Sidestay & Uplock

FIGURE AND INDEX NUMBER	GROUP LANDING GEAR MAJOR ASSEMBLY MAIN LANDING GEAR SIDESTAY & UPLOCK PART NUMBER	1 2 3 4 5 6 7 NOMENCLATURE	EFFEC-TIVITY	UNITS PER ASSY
2-4-8 -	41A-87506-818	SIDESTAY ASSY - MAIN GEAR PORT (I) (SEE FIG. 2-4-2)		1
	41A-87506-819	SIDESTAY ASSY - MAIN GEAR STBD (I)		1
	41A-87532	.SIDESTAY ASSY - MAIN GEAR UPPER		1
- 1	41A-87532-2	..SIDESTAY - MAIN GEAR UP		1
- 2	41A-87536	..BUSHING - UPPER SIDESTAY		4
	41A-87540	..BUSHING - UPPER SIDESTAY		2
	41A-87531-16	.SIDESTAY ASSY - MAIN GEAR LOWER		1
- 3	41A-87531-18	..SIDESTAY - LOWER		1
- 4	LHSSR-10	..BEARING - (V73134)		2
- 5	41A-87534	.BOLT - MAIN GEAR SIDESTAY		1
	AN960-816	.WASHER		1
	AN320-8	.NUT		1
	MS24665-287	.COTTER PIN		1
	41A-87508-808	.UPLOCK ASSY - MAIN GEAR PORT		1
	41A-87508-809	.UPLOCK ASSY - MAIN GEAR STBD		1
- 6	41A-87548-20	..BRACKET ASSY - MAIN GEAR		1
- 7	41A-87571-4	..BRACKET - MAIN GEAR UPLOCK		1
	41A-87574	..LINK		1
	41A-87508-64	..PIN		1
	AN960-10L	..WASHER		1
	MS24665-132	..COTTER PIN		1
- 8	MS35206-245	..SCREW		4
	1108-02	..LOCK WASHER - (SHI)		4
	AN960-8L	..WASHER		4
- 9	41A-87508-34	..SWITCH ASSY - (MAIN GEAR UPLOCK) (SEE SECTION 12)		REF
-10	41-87020	..LEVER - MAIN GEAR DOOR UPLOCK		2
-11	41A-87545-2	..LINK - MAIN GEAR UPLOCK UPPER LOCK		1
-12	41-87021-4	..LINK - MAIN GEAR UPPER LOCK		1
-13	41-87019	..PIN - MAIN GEAR (UPLOCK)		2
-14	41-87024	..HALF SPRING BOX - MAIN GEAR		1
-15	41-87025	..HALF SPRING BOX - MAIN GEAR		1
-16	41A-87572	..SPRING - MAIN GEAR UPLOCK COMPRESSION		1
-17	41-87016	..SPRING - SPRING BOX COMPRESSION		1
-18	41-87023-2	..LINK - MAIN GEAR LOWER LOCK		2
-19	MS20392-3C47	..PIN		1
-20	41A-87563	..BEARING - SLIDER		2
	MS24665-151	..COTTER PIN		1
-21	41A-87508-43	..PIN		2
	AN960-516	..WASHER		2
	MS24665-300	..COTTER PIN		2
-22	41A-87508-41	..PIN		1
	AN960-10L	..WASHER		1
	MS24665-151	..COTTER PIN		1
-23	41A-87508-42	..PIN		2
	AN960-10	..WASHER		2
	MS24665-151	..COTTER PIN		2
-24	41A-87533-8	.BLOCK ASSY - MAIN GEAR SIDESTAY ATTACHMENT	001-095	2
	41A-87533-8	.BLOCK ASSY - MAIN GEAR SIDESTAY ATTACHMENT	096-	1
-25	41A-87533-10	.BLOCK ASSY - MAIN GEAR SIDESTAY ATTACHMENT	096-	1
	NAS561-6-22	.PIN	096-	1
-26	41-87034-2	.SHAFT - MAIN GEAR		1
	41A-87506-60	.SHIM		2
		OR		
	41A-87500-75	.SHIM		
		DELETED		
	S1246AB64-42-60	.WASHER - (V88308)		1
-27	AN4-17	.BOLT		1

FIGURE AND INDEX NUMBER	GROUP LANDING GEAR MAJOR ASSEMBLY MAIN LANDING GEAR SIDESTAY & UPLOCK PART NUMBER	1 2 3 4 5 6 7 NOMENCLATURE	EFFEC-TIVITY	UNITS PER ASSY
2-4-8 -28	41-87050	.WASHER - MAIN GEAR RUBBER		2
	AN960-416	.WASHER		2
	AN320-4	.NUT		1
	MS24665-138	.COTTER PIN		1
-29	41A-85018	.BOLT - LDG/GR		1
	MS20002C8	.WASHER		1
	AN320-8	.NUT		1
	MS24665-287	.COTTER PIN		1
-30	MS15001-1	.FITTING		1
-31	3290000	ACTUATOR ASSY - M/LDG/GR (SEE SECTION 8)		REF
-32	NAS1110-27D	BOLT - (SIDESTAY TO MAIN GEAR) (SEE FIG. 2-4-2)		REF
-33	100994-1	ACTUATOR ASSY - (SEE SECTION 8)		REF
-34	NAS623-3-21	SCREW - (SEE SECTION 8)		REF
-35	3288000-5A	STRUT ASSY - (SEE FIG. 2-4-7)		REF
		-000-		

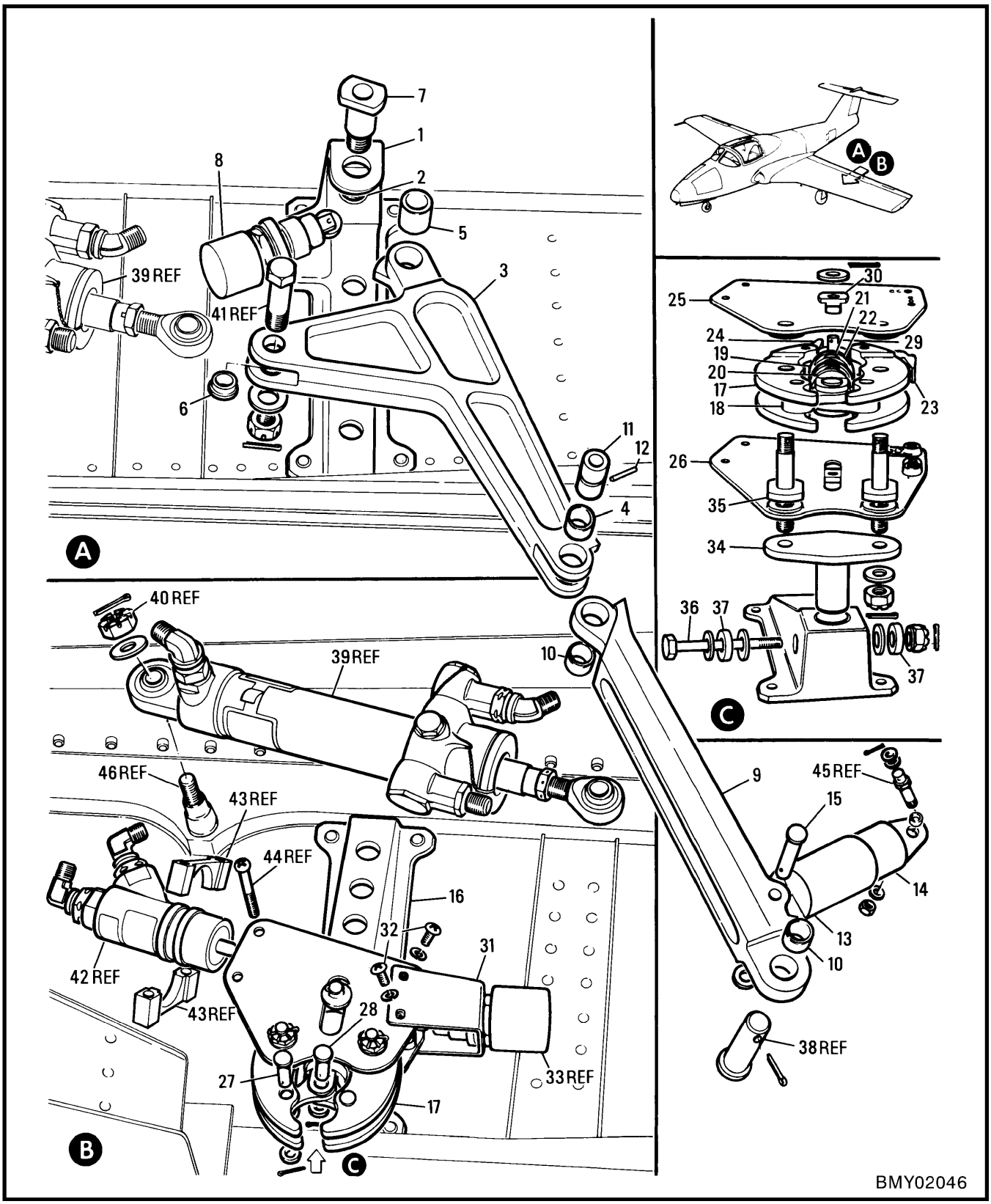

Figure 2-4-9 Main Landing Gear Operating Mechanism

FIGURE AND INDEX NUMBER	GROUP LANDING GEAR MAJOR ASSEMBLY MAIN LANDING GEAR OPERATING MECHANISM PART NUMBER	1 2 3 4 5 6 7 NOMENCLATURE	EFFEC-TIVITY	UNITS PER ASSY
2-4-9 -	41A-87509-804	OPERATING MECH INSTL - MAIN GEAR DOOR PORT (SEE FIG. 2-4-2)		NP
	41A-87509-805	OPERATING MECH INSTL - MAIN GEAR DOOR STBD		NP
	41A-87521	.BRACKET ASSY - MAIN GEAR DOOR LEVER LH (JIG LOCATED)		REF
	41A-87521-1	.BRACKET ASSY - MAIN GEAR DOOR LEVER RH (JIG LOCATED)		REF
- 1	41A-87521-2	..BRACKET - MAIN GEAR DOOR LEVER LH		1
	41A-87521-3	..BRACKET - MAIN GEAR DOOR LEVER RH		1
- 2	MS21209F8-15	..INSERT		1
	41A-87552-800	.LEVER ASSY - MAIN GEAR DOOR LH		1
	41A-87552-801	.LEVER ASSY - MAIN GEAR DOOR RH		1
- 3	41A-87552-10	..LEVER - MAIN GEAR DOOR LH		1
	41A-87552-11	..LEVER - MAIN GEAR DOOR RH		1
- 4	41A-87537	..BUSHING - MAIN GEAR DOOR		2
- 5	41A-87539	..BUSHING - MAIN GEAR DOOR		1
- 6	41A-87541	..BUSHING - MAIN GEAR DOOR		2
- 7	41A-87553	.BOLT - MAIN GEAR DOOR		1
- 8	41A-87508-28	.SWITCH ASSY - (SEE SECTION 12)		REF
	41A-87551	.LEVER ASSY - MAIN GEAR DOOR		1
- 9	41A-87551-2	..LEVER - MAIN GEAR DOOR		1
-10	41A-87537-2	..BUSHING - MAIN GEAR DOOR		2
-11	41A-87554	.PIN - MAIN GEAR DOOR		1
-12	NAS561P4-16	.PIN		1
-13	41A-87556-4	.HALF SPRING BOX - LANDING GEAR		1
	41A-87558	.SPRING - SPRING BOX COMPRESSION		1
-14	41A-87557-4	.HALF SPRING BOX - LANDING GEAR		1
	NAS43-4-21	.SPACER		2
-15	MS20392-3C41	.PIN		1
	AN960-416L	.WASHER		1
	MS24665-155	.COTTER PIN		1
	41A-87522	.BRACKET ASSY - MAIN GEAR (JIG LOCATED)		NP
-16	41A-87522-2	..BRACKET - MAIN GEAR		1
	41A-87538	..BUSHING - MAIN GEAR DOOR BRACKET		1
	41A-87520-804	.UPLOCK ASSY - MAIN GEAR DOOR LH		1
	41A-87520-805	.UPLOCK ASSY - MAIN GEAR DOOR RH		1
-17	41-87020	..LEVER - MAIN GEAR		2
-18	41-87023	..LINK - MAIN GEAR LOWER LOCK	001-020	2
	41-87023-2	..LINK - MAIN GEAR LOWER LOCK	021-	2
-19	41-87024	..HALF SPRING BOX - MAIN GEAR		1
-20	41-87025	..HALF SPRING BOX - MAIN GEAR		1
-21	41-87016	..SPRING - SPRING BOX COMPRESSION		1
-22	41A-87572	..SPRING -MAIN GEAR DOOR UPLOCK COMPRESSION		1
-23	41-87021-4	..LINK - MAIN GEAR UPPER LOCK		1
-24	41-87022-4	..LINK - MAIN GEAR UPPER LOCK		1
	41-87019	..PIN - MAIN GEAR		2
-25	41A-87549-12	..PLATE ASSY - MAIN GEAR DOOR LH		1
	41A-87549-13	..PLATE ASSY - MAIN GEAR DOOR RH		1
-26	41A-87549-14	..PLATE ASSY - MAIN GEAR DOOR LH		1
	41A-87549-15	..PLATE ASSY - MAIN GEAR DOOR RH		1
-27	41A-87520-30	..PIN		2
-28	41A-87520-31	..PIN		1
-29	MS20392-3C47	..PIN		1
-30	41A-87563	..BEARING - SLIDER		2
	AN960-10	..WASHER		3
	MS24665-132	..COTTER PIN		4
-31	41A-87571	..BRACKET - MAIN GEAR DOOR UPLOCK		1
-32	MS35206-245	..SCREW		4
	MS35333-38	..LOCK WASHER		4
	AN960-8L	..WASHER		4

FIGURE AND INDEX NUMBER	GROUP LANDING GEAR MAJOR ASSEMBLY MAIN LANDING GEAR OPERATING MECHANISM PART NUMBER	1 2 3 4 5 6 7 NOMENCLATURE	EFFEC-TIVITY	UNITS PER ASSY
2-4-9 -33	41A-87520-42	..SWITCH ASSY - MAIN GEAR UPLOCK (SEE SECTION 12)		REF
-34	41-87058-2	..PIN - MAIN GEAR DOOR PIVOT		1
-35	41-87063	..STUD - MAIN GEAR DOOR		2
	MS20002-5	..WASHER		2
	AN310-5	..NUT		2
	AN960-416	..WASHER		2
	AN310-4	..NUT		2
	MS24665-132	..COTTER PIN		4
-36	NAS6204-24D	.BOLT		1
-37	41-87050	.WASHER - MAIN GEAR RUBBER		2
	MS20002C4	.WASHER		1
	AN960-416L	.WASHER		1
	AN320-4	.NUT		1
	MS24665-155	.COTTER PIN		1
-38	41A-87500-40	PIN - (SEE FIG. 2-4-2)		REF
-39	3289000-1	ACTUATOR ASSY - (SEE SECTION 8)		REF
-40	AN320-5	NUT - (SEE SECTION 8)		REF
-41	NAS1107-17D	BOLT - (SEE SECTION 8)		REF
-42	100994	ACTUATOR ASSY - (SEE SECTION 8)		REF
-43	41A-42309-2	BLOCK - (SEE SECTION 8)		REF
-44	NAS623-3-21	SCREW - (SEE SECTION 8)		REF
-45	41A-10512	PIVOT - (SEE FIG. 2-4-10)		REF
-46	41A-87523	SPIGOT - (SEE SECTION 1)		REF
		-000-		

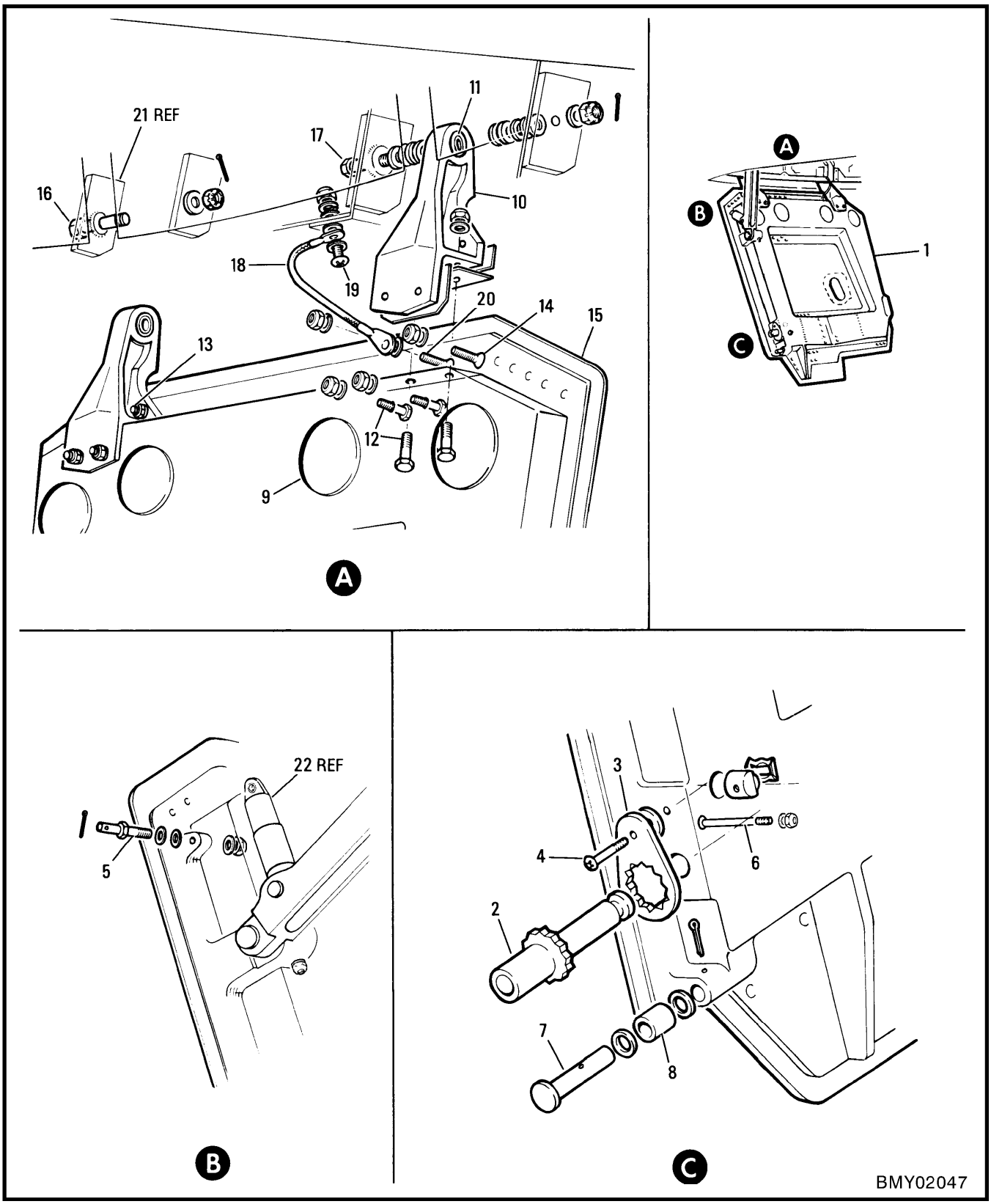

Figure 2-4-10 Main Landing Gear Door

FIGURE AND INDEX NUMBER	GROUP LANDING GEAR MAJOR ASSEMBLY MAIN LANDING GEAR DOOR PART NUMBER	1 2 3 4 5 6 7	NOMENCLATURE	EFFEC-TIVITY	UNITS PER ASSY
2-4-10 -	41A-10520		DOOR GENL ASSY - MAIN LANDING GEAR PORT (I) (SEE SECTION 1)		1
	41A-10520-1		DOOR GENL ASSY - MAIN LANDING GEAR STBD (I)		1
	41A-10500	*	.DOOR ASSY - MAIN LANDING GEAR LH		1
	41A-10500-1	*	.DOOR ASSY - MAIN LANDING GEAR RH		1
- 1	41A-10501		..DOOR - MAIN LANDING GEAR LH (CASTING)		1
	41A-10501-1		..DOOR - MAIN LANDING GEAR RH (CASTING)		1
- 2	41A-10510		..PIN - MAIN LANDING GEAR DOOR UPLOCK		1
- 3	41A-10511		..PLATE - MAIN GEAR DOOR UPLOCK PIN LOCKING		1
- 4	MS27039-1-14		..SCREW		1
	AN960PD10		..WASHER		1
	2452-02RET		..RETAINER - (V72962)		1
	2452-02		..NUT - (V72962)		1
- 5	41A-10512		..PIVOT - MAIN GEAR DOOR ACTE LEVER SPRING		1
	AN960PD416L		..WASHER		2
	MS21042L4		..NUT		1
- 6	NAS1202-26		..SCREW		1
	AN960PD8L		..WASHER		1
	MS21042L08		..NUT		1
- 7	41A-10513		..PIN - MAIN GEAR DOOR (ROLLER)		1
- 8	41-10519-2		..ROLLER - MAIN GEAR DOOR		1
	AN960PD416		..WASHER		2
	MS24665-134		..COTTER PIN		1
- 9	XX51362		..BUTTON - (V09736)		4
	41A-10514		..FITTING ASSY - MAIN GEAR DOOR HINGE FWD		1
	41A-10514-2		..FITTING ASSY - MAIN GEAR DOOR HINGE REAR		1
-10	41A-10514-4		...FITTING - MAIN GEAR DOOR HINGE FWD		1
	41A-10514-6		...FITTING - MAIN GEAR DOOR HINGE REAR		1
-11	AN206DSP4		...BEARING		2
	41A-10500-4		..SHIM		2
	41A-10500-6		..SHIM		2
	41A-10500-8		..SHIM		2
-12	NAS1103-8		..BOLT		8
	AN960PD10L		..WASHER		8
	MS21042L3		..NUT		8
-13	NAS1204-10		..SCREW		2
	AN960PD416		..WASHER		2
	MS21042L4		..NUT		2
-14	NAS1204-8		..SCREW		1
	AN960PD416		..WASHER		1
	MS21042L4		..NUT		1
-15	41A-10500-2		..SKIN - MAIN GEAR DOOR LH		1
	41A-10500-3		..SKIN - MAIN GEAR DOOR RH		1
-16	NAS6204-18D		.BOLT		1
	AN960PD416		.WASHER		1
	AN310-4		.NUT		1
	MS24665-134		.COTTER PIN		1
-17	NAS6204-20D		.BOLT		1
	AN960PD416		.WASHER		AR
	AN960PD416L		.WASHER		AR
	S1236-416L		.WASHER - (V88308) (SHIM)		AR
	AN310-4		.NUT		1
	MS24665-134		.COTTER PIN		1
	NW4528142-1		JUMPER INSTL - BONDING (SEE SECTION 12)		REF
-18	M83413/8-A06AC		.JUMPER ASSY - (PORT & STBD)		2
		*	IAW C-12-114-000/CF-465		

FIGURE AND INDEX NUMBER	GROUP LANDING GEAR MAJOR ASSEMBLY MAIN LANDING GEAR DOOR PART NUMBER	1 2 3 4 5 6 7 NOMENCLATURE	EFFEC-TIVITY	UNITS PER ASSY
2-4-10 -19	MS35206-232	.SCREW		2
	AN960JD6L	.WASHER		4
	AN960-6L	.WASHER		2
	MS35338-41	.WASHER-LOCK		2
	MS21042L06	.NUT		2
-20	NAS1204-8	.BOLT		2
	AN960JD416L	.WASHER		2
	MS35338-44	.WASHER-LOCK		2
	MS21042L4	.NUT		2
-21	41A-10045	PLATE - BEARING (SEE SECTION 1)		REF
-22	41A-87556-4	HALF SPRING BOX - LANDING GEAR (SEE FIG. 2-4-9)		REF
		-000-		

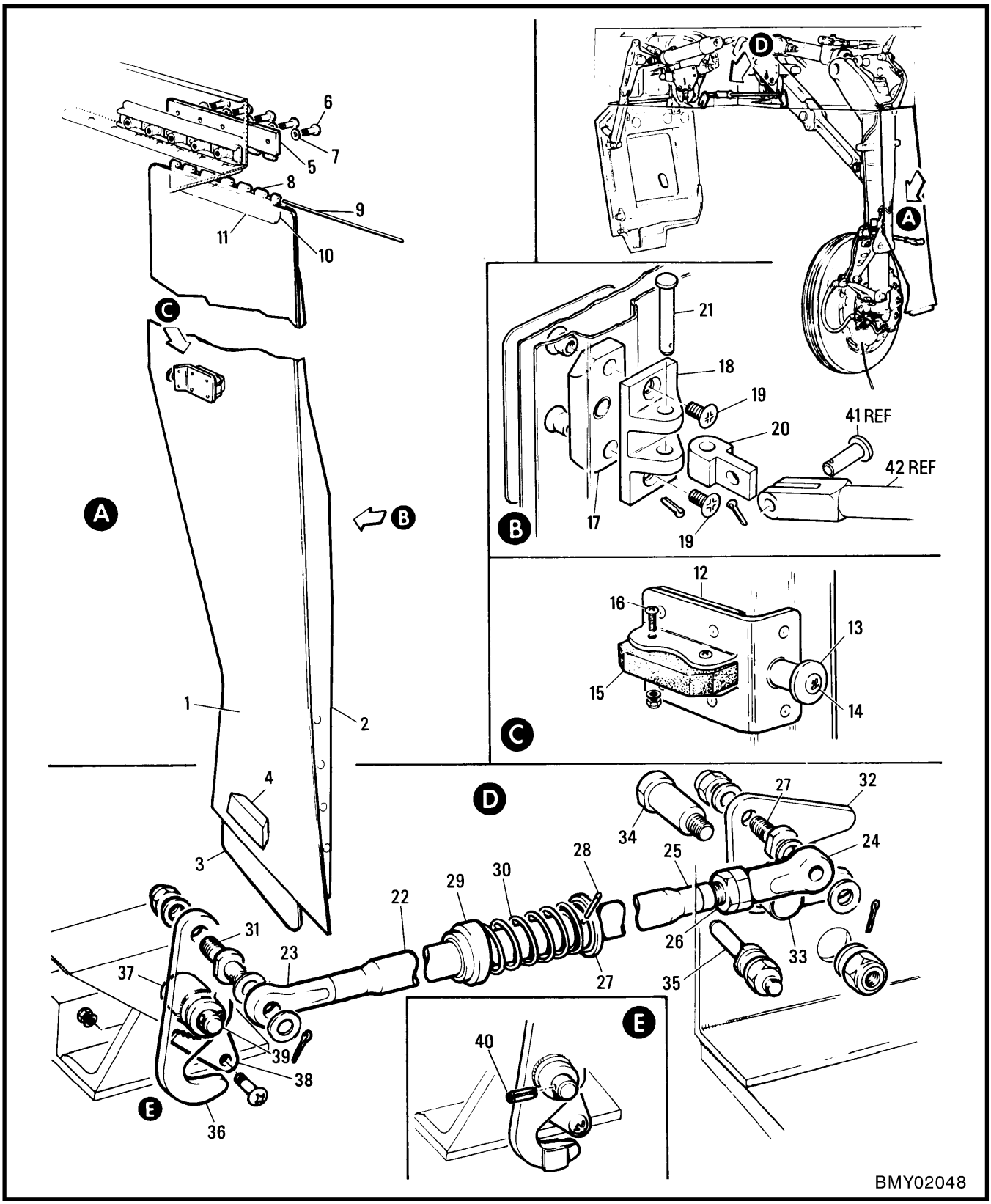

Figure 2-4-11 Main Landing Gear Leg Door & Latch Mechanism

FIGURE AND INDEX NUMBER	GROUP LANDING GEAR MAJOR ASSEMBLY MAIN LANDING GEAR LEG DOOR & LATCH MECHANISM PART NUMBER		1 2 3 4 5 6 7 NOMENCLATURE	EFFEC-TIVITY	UNITS PER ASSY
2-4-11 -	41A-10550-806		DOOR GENL ASSY - MAIN LDG/GR LEG LH (SEE SECTION 1)		NP
	41A-10550-807		DOOR GENL ASSY - MAIN LDG/GR LEG RH		NP
	41A-10550-58		.DOOR ASSY - MAIN LANDING GEAR LEG LH		1
	41A-10550-59		.DOOR ASSY - MAIN LANDING GEAR LEG RH		
- 1	41A-10550-44		..PANEL - OUTER SKIN LH		1
	41A-10550-45		..PANEL - OUTER SKIN RH		1
- 2	41A-10550-46		..PANEL - INNER SKIN LH		1
	41A-10550-47		..PANEL - INNER SKIN RH		1
- 3	41A-10550-8		..STRIP - LANDING LH		1
	41A-10550-9		..STRIP - LANDING RH		1
- 4	41A-10550-14		..BLOCK - PHENOLIC LH		1
	41A-10550-15		..BLOCK - PHENOLIC RH		1
	41A-10555-804		..HINGE ASSY - MAIN LANDING GEAR DOOR		1
- 5	41A-10555-18		...HALF HINGE		1
R	41A-10550-952		...STRIP, SHIMMING		AR
- 6	MS27039-1-11		...SCREW		5
- 7	AN960PD10		...WASHER		5
- 8	41A-10555-16		...HALF HINGE		1
- 9	41A-10555-8		...PIN - MAIN LANDING GEAR DOOR HINGE		1
-10	41A-10550-10		..BLOCK - FILLER		1
-11	41A-10550-12		..STRIP		1
	41A-10553-6		..BRACKET ASSY - MAIN LEG DOOR UPLOCK		1
-12	41A-10553-2		...BRACKET		1
-13	41A-10553-4		...RETAINER		1
-14	MS24694-3		...SCREW		1
	41A-10550-16		..SHIM - LAMINATED		1
-15	K41A-10006-12	*	..BLOCK - RUBBER		1
-16	MS35206-248		..SCREW		2
	AN960PD8L		..WASHER		2
	MS21042L08		..NUT		2
	41A-10551-10		..BLOCK ASSY - LEG DOOR DRIVE POINT MTG		1
-17	41A-10551-12		...BLOCK		1
-18	41A-10559-2	*	.BRACKET - LEG DOOR DRIVE HINGE		1
-19	MS24694-50	*	.SCREW		2
	52-1650-02	*	.NUT - (V72962)		2
-20	41A-10560	*	.HINGE - LEG DOOR DRIVE		1
-21	MS20392-2C37	*	.PIN		1
	AN960PD10L	*	.WASHER		1
	MS24665-130	*	.COTTER PIN		1
	41A-87510-800		LATCH MECHANISM ASSY - MLG LEG DOOR LH (SEE SECTION 1)		1
	41A-87510-801		LATCH MECHANISM ASSY - MLG LEG DOOR RH		1
	41A-87511		.PUSH ROD ASSY - MAIN GEAR LEG DOOR LOCK		1
-22	41A-87511-2		..PUSH ROD - MAIN GEAR LEG DOOR LOCK		1
-23	41-87099		..EYE END - PUSH ROD NON ADJUSTABLE		1
-24	41-87098		..EYE END - PUSH ROD ADJUSTABLE		1
		*	IAW C-12-114-000/CF-264		

FIGURE AND INDEX NUMBER	GROUP LANDING GEAR MAJOR ASSEMBLY MAIN LANDING GEAR LEG DOOR & LATCH MECHANISM PART NUMBER	1 2 3 4 5 6 7 NOMENCLATURE	EFFEC-TIVITY	UNITS PER ASSY
2-4-11 -25	S1222-6-049-1032	..ROD END - (V88308)		1
-26	AN345-10	..NUT		1
-27	41A-87512	..GUIDE - SPRING (MAIN GEAR DOOR LATCH)		1
-28	NAS561P2-10	..PIN		1
-29	41A-87513	.GUIDE - SPRING (MAIN GEAR DOOR LATCH)		1
-30	41A-87514	.SPRING - COMPRESSION		1
-31	41-87094-2	.BOLT - STUD		2
	AN960PD10L	.WASHER		2
	AN960-10L	.WASHER		2
	MS21042L3	.NUT		2
	MS24665-134	.COTTER PIN		2
	41A-87526-8	.FORK ASSY - LEG DOOR MECHANISM DRIVE LH		1
	41A-87526-9	.FORK ASSY - LEG DOOR MECHANISM DRIVE RH		1
-32	41A-87526-2	..FORK - LEG DOOR MECHANISM DRIVE		1
-33	41A-87515	..BUSHING		1
-34	41A-87529	.BOLT - STUD		1
	AN960-416L	.WASHER		1
	MS21042L4	.NUT		1
-35	41-87094-6	.BOLT - STUD		1
	AN960PD6	.WASHER		2
	MS21042L3	.NUT		1
	41A-87527-6	.HOOK ASSY - LEG DOOR MECHANISM LATCH LH		1
	41A-87527-7	.HOOK ASSY - LEG DOOR MECHANISM LATCH RH		1
-36	41A-87527-8	..HOOK - LEG DOOR MECHANISM LATCH		1
-37	41A-87516	..BUSHING		1
-38	41A-87519-6	.PLATE - MAIN GEAR DOOR LATCH LOCKING		1
	AN960PD6	.WASHER		1
	S1256C632-7A	.SCREW - (V88308)		1
	MS21042L06	.NUT		1
-39	41A-87528	.BOLT - STUD		1
	AN960PD716L	.WASHER		AR
	AN960-716L	.WASHER		1
-40	NAS561P4-10	.PIN		1
	AN960-416L	.WASHER		1
	MS21042L4	.NUT		1
-41	MS20392-2C17	PIN - (LINK TO LEG DOOR) (SEE FIG. 2-4-2)		REF
-42	41-87078-16	CLEVIS - (SEE FIG. 2-4-7)		REF
		-000-		

SECTION 5

POWER PLANT

TABLE OF CONTENTS

Figure	Title	Page
2-5-1	Complete Power Plant	2-5-2
2-5-2	Power Plant Mounts	2-5-4
2-5-3	Jet Pipe & Drain	2-5-6
2-5-4	Power Plant Drains	2-5-10
2-5-5	Zone 1 & 2 & Generator Cooling	2-5-14
2-5-6	Zone 2 Cooling Jet Pumps	2-5-16

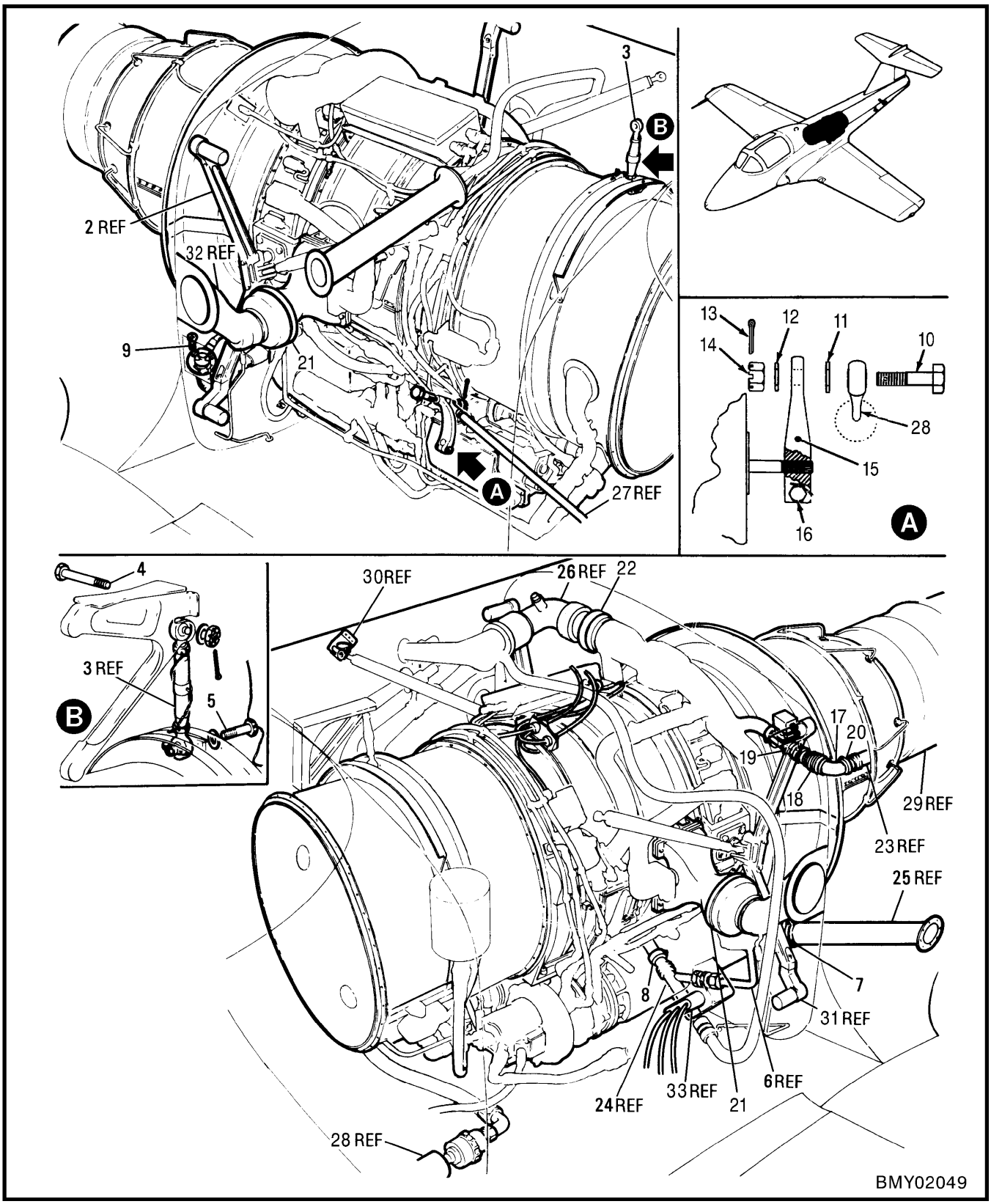

Figure 2-5-1 Complete Power Plant

FIGURE AND INDEX NUMBER	GROUP POWER PLANT MAJOR ASSEMBLY COMPLETE POWER PLANT PART NUMBER	1 2 3 4 5 6 7 NOMENCLATURE	EFFEC-TIVITY	UNITS PER ASSY
2-5-1 -	41A-44000	POWER PLANT INSTL - COMPLETE (SEE SECTION 3)		NP
- 1		DELETED		
- 2	41A-61200	.MOUNT INSTL - ENGINE MAIN (SEE FIG. 2-5-2)		REF
- 3	41A-61201	.MOUNTING ASSY - ENGINE FWD (SEE FIG. 2-5-2)		REF
- 4	NAS6204-15D	.BOLT		1
	AN960-416	.WASHER		1
	AN320-4	.NUT		1
	MS24665-134	.COTTER PIN		1
- 5	NAS6204-14	.BOLT - (HEAD REQUIRES DRILLING)		1
	AN960-416	.WASHER		1
- 6	41A-99202-2	.DUCT ASSY - GENERATOR COOLING (SEE FIG. 2-5-5)		REF
- 7	24540-150	.CLAMP - (V69705)		1
- 8	24540-125	.CLAMP - (V69705)		1
- 9	MS35207-263	.SCREW		4
-10	NAS6204-13D	.BOLT		1
		OR		
	NAS1104-13D	.BOLT		1
-11	NAS43HT4-7	.SPACER		1
-12	AN960C416	.WASHER		1
-13	MS24665-134	.COTTER PIN		1
-14	AN320-4	.NUT		1
-15	41A-90773-10	.LEVER-POWER CONTROL		1
-16	NAS1004-16H	.BOLT		1
	AN960C416	..WASHER		1
	MS21043-4	..NUT		1
-17	41A-99208	.ELBOW ASSY - ZONE 2 COOLING FLEXIBLE		1
	502563-24-6/64	..DUCT - (V69705)		1
	41A-99207	..FLANGE - ZONE 2 COOLING (WELDED)		1
-18	10225-68-1	..JOINT - (V70628) (METAL FLEXIBLE) (IAW 41A-98102-8)		1
	24538-150	..FLANGE - (V69705) (WELDED)		1
	7402	..TAPE - (V36790)		AR
	7000	..TAPE - (V36790)		AR
-19	52869-150	.COUPLING - (V75829)		1
	S1442-1	.GASKET - (V88308)		1
-20	24540-150	.CLAMP - (V69705)		1
-21	QS200M68W	.CLAMP - (V08484) (COMPRESSOR BLEED LEAKAGE DUCT)		2
R -22	18276-250	.CLAMP - (V69705), OR		1
R	613111A-334-Z	.COUPLING		1
	24346-250C	.GASKET - (V69705)		1
-23	41A-99209-26	TUBE ASSY - ZONE 2 COOLING (SEE FIG. 2-5-6)		REF
-24	41A-99202-6	DUCT ASSY - GENERATOR COOLING (SEE FIG. 2-5-5)		REF
-25	41A-99202-4	DUCT ASSY - GENERATOR COOLING (SEE FIG. 2-5-5)		REF
-26	41A-98206	DUCT ASSY - FLEXIBLE ELBOW (SEE SECTION 9)		REF
-27	40250	PUSH PULL UNIT - (POWER CTL) (SEE SECTION 7)		REF
-28	700070	STRAINER ASSY - (FUEL SYS) (SEE SECTION 6)		REF
-29	41A-61300	JET PIPE INSTL - (SEE FIG. 2-5-1)		REF
-30	41A-35178-4	MOUNTING - ENGINE FORWARD (SEE SECTION 3)		REF
-31	41A-35148	MOUNTING INSTL - FS 306 ENGINE (SEE SECTION 3)		REF
-32	41A-61405	DUCT ASSY - COMPRESSOR BLEED EXIT (SEE SECTION 3)		REF
-33	8300/300	SHUNT - (TYPE MSB30/1) (SEE SECTION 13)		REF

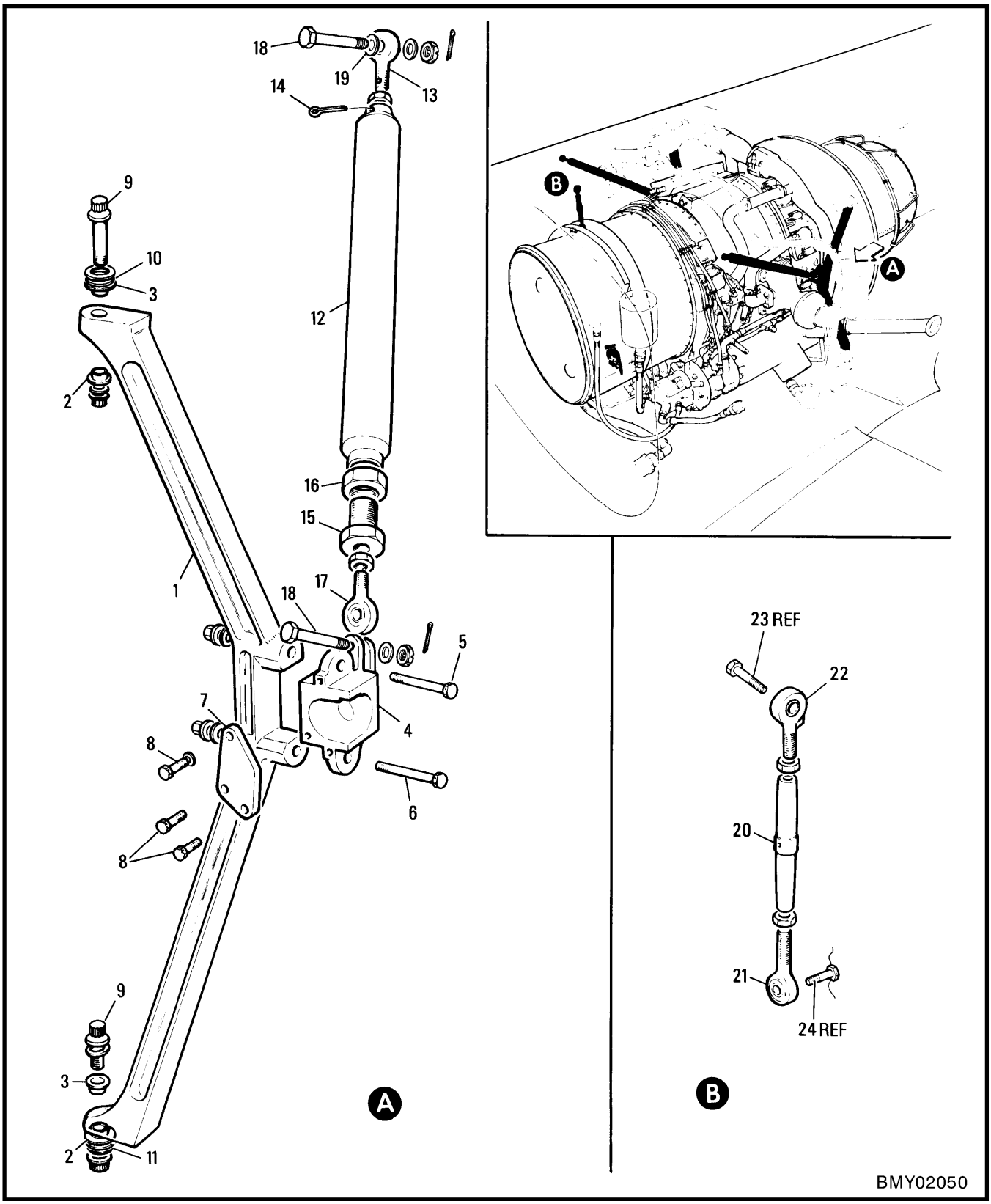

Figure 2-5-2 Power Plant Mounts

FIGURE AND INDEX NUMBER	GROUP POWER PLANT MAJOR ASSEMBLY POWER PLANT MOUNTS PART NUMBER	1 2 3 4 5 6 7 NOMENCLATURE	EFFEC-TIVITY	UNITS PER ASSY
2-5-2 -	41A-61200	MOUNT INSTL - ENGINE MAIN LH (SEE FIG. 2-5-1)	001-007	NP
	41A-61200-800	MOUNT INSTL - ENGINE MAIN LH	008-	NP
	41A-61200-1	MOUNT INSTL - ENGINE MAIN RH	001-007	NP
	41A-61200-801	MOUNT INSTL - ENGINE MAIN RH	008-	NP
	41A-61200-2	.MOUNT ASSY - ENGINE MAINLH		1
	41A-61200-3	.MOUNT ASSY - ENGINE MAIN RH		1
	41A-61210	..MOUNT ASSY - GE ENGINE MAIN		1
- 1	41A-61210-2	...MOUNT - ENGINE MAIN		1
- 2	41A-61213-2	...BUSHING - ENGINE MAIN MOUNT (LARGE)		2
- 3	41A-61213-4	...BUSHING - ENGINE MAIN MOUNT (SMALL)		2
- 4	41A-61211-2	..HOUSING - ENGINE MAIN MOUNT TRUNNION LH		1
	41A-61211-3	..HOUSING - ENGINE MAIN MOUNT TRUNNION RH (FOR SPARES ORDER 41A-61211-5) OR		1
	41A-61211-5	..HOUSING - ENGINE MAIN MOUNT TRUNNION RH (SPARE FOR 41A-61211-3)		
- 5	NAS6204-34	..BOLT		1
- 6	NAS6204-36	..BOLT		1
	AN960-416	..WASHER		2
	MS21042L4	..NUT		2
- 7	41A-61212	.PLATE - TRUNNION HOUSING LOCKING LH		1
	41A-61212-1	.PLATE - TRUNNION HOUSING LOCKING RH		1
- 8	NAS1303-8H	.BOLT		3
	AN960C10	.WASHER		3
R - 9	NAS626-22	.BOLT		4
R	S1242-6A	.WASHER - (V88308)		4
R	AN960-616	.WASHER		4
R	42FW624	.NUT (V56878) (SUPERSEDES P/N ZEB1845-064)		4
-10	41A-61200-32	.SHIM - ENGINE MAIN MOUNT UPPER		1
-11	41A-61200-34	.SHIM - ENGINE MAIN MOUNT LOWER		1
	41A-61220	.STRUT ASSY - ENGINE MAIN MOUNT FORWARD	001-007	1
	41A-61220-800	.STRUT ASSY - ENGINE MOUNT FORWARD	008-	1
-12	41A-61221	..STRUT ASSY - ENGINE MOUNT FWD (WELDED)		1
-13	KE4-10	..ROD END - (V97613) (RH THREAD) (IAW 41A-60513-2)		1
	NAS509-6	..NUT		1
-14	MS24665-138	..COTTER PIN	008-	1
-15	41A-61223	..SCREW - FORWARD STRUT ADJUSTMENT		1
-16	NAS509-10	..NUT		1
-17	KEL4-10	..ROD END - (V97613) (LH THREAD) (IAW 41A-60513-4)		1
	NAS509L6	..NUT		1
-18	NAS464P4-14	.BOLT		2
-19	AN960-416L	.WASHER		1
	AN960C416L	.WASHER		1
	AN320-4	.NUT		2
	MS24665-132	.COTTER PIN		2
	41A-61201	MOUNTING ASSY - ENGINE FWD (SEE FIG. 2-5-1)		1
-20	41A-61201-6	.BARREL - TURNBUCKLE		1
-21	KE4-10	.ROD END - (V97613) (RH THREAD) (IAW 41A-60513- 2)		1
	NAS509-6	.NUT		1
-22	KEL4-10	.ROD END - (V97613) (LH THREAD) (IAW 41A-60513-4)		1
	NAS509L6	.NUT		1
-23	NAS6204-15D	BOLT - (SEE FIG. 2-5-1)		REF
-24	NAS6204-14	BOLT - (SEE FIG. 2-5-1)		REF
		-000-		

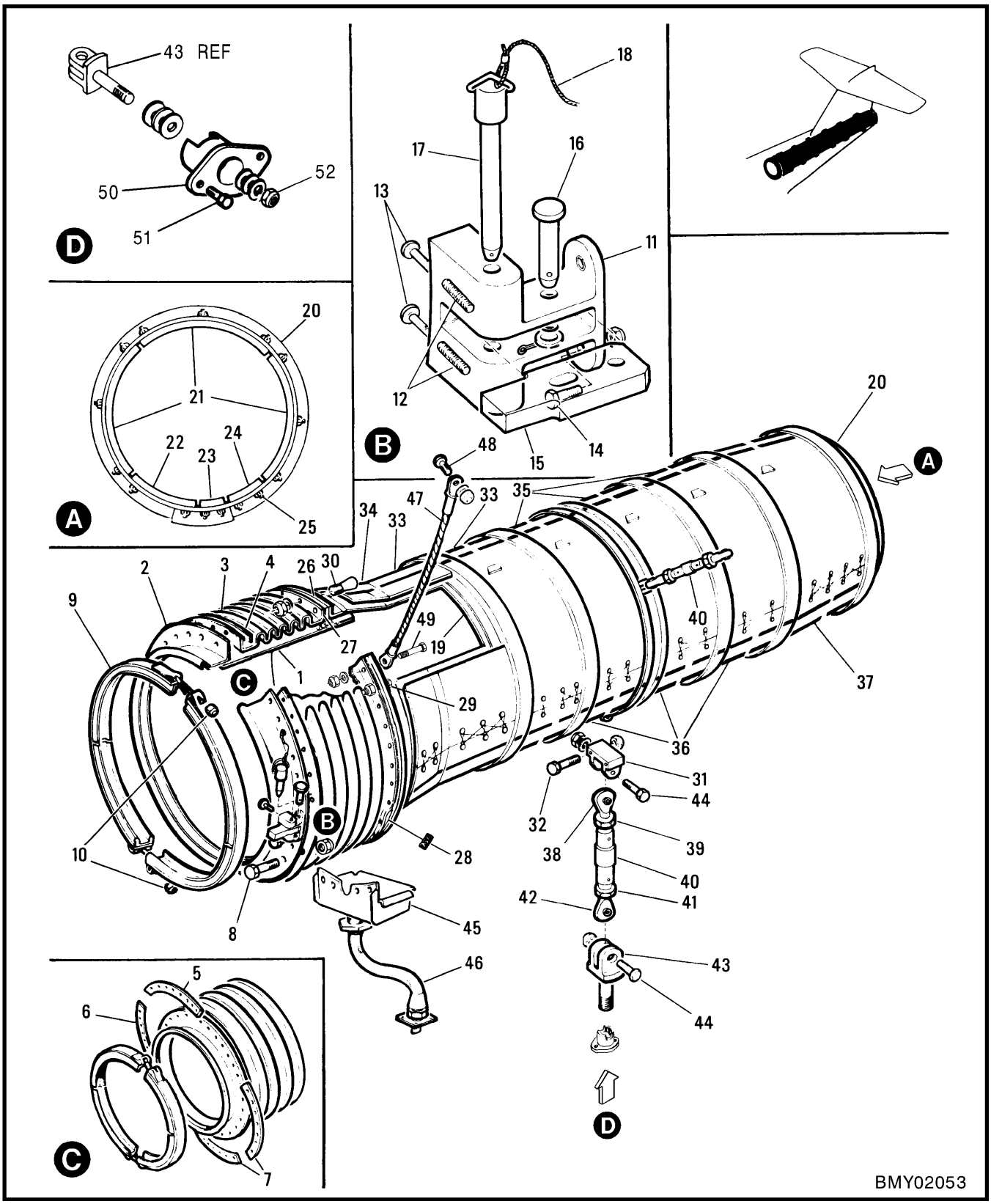

Figure 2-5-3 Jet Pipe & Drain

FIGURE AND INDEX NUMBER	GROUP POWER PLANT MAJOR ASSEMBLY JET PIPE & DRAIN PART NUMBER	1 2 3 4 5 6 7 NOMENCLATURE	EFFEC-TIVITY	UNITS PER ASSY
2-5-3 -	41A-44000-2	JET PIPE INSTL - POWER PLANT(SEE SECTION 3)		NP
	41A-61300-800	.JET PIPE INSTL - (POWER PLANT)		NP
- 1	41A-61301	..JET PIPE ASSY - FORWARD SECTION		1
- 2	58078	...FLANGE - (V69705) (SEAM WELDED) (IAW 41A-60505-2)		1
- 3	0310-272-501	..BELLOWS - (V08471) (JET PIPE) (IAW 41A-60505)		1
- 4	41A-61313-6	..RING - JET PIPE		2
- 5	41A-61318-4	..SEGMENT - JET PIPE RING (UPPER LH)		1
- 6	41A-61318-6	..SEGMENT - JET PIPE RING (UPPER RH)		1
- 7	41A-61318-2	..SEGMENT - JET PIPE RING (LOWER LH & RH)		2
- 8	NAS1003-2A	..BOLT		24
	MS20500-1032	..NUT		24
- 9	NH1000206	..COUPLING ASSY - (V69705) (JET PIPE ATT) (IAW 41A-60505-6)		1
	MVT60050-10	...COUPLING HALF ASSY - (V69705) (IAW 41A-60505-4)		2
-10	Z1200-048	...NUT - (V72962)		2
	41A-61306	..BRACKET ASSY - JET PIPE SAFETY LATCH		4
-11	41A-61306-2	...BRACKET - JET PIPE SAFETY LATCH		1
-12	MS21209F1-20	...INSERT		2
-13	MS27039-1-08	..SCREW		8
-14	NAS1003-2A	..BOLT		12
	MS20500-1032	..NUT		12
-15	41A-61305-2	..LATCH - JET PIPE SAFETY		4
		OR		
	41A-61305-6	..LATCH - JET PIPE SAFETY		4
		OR		
	41A-61305-8	..LATCH - JET PIPE SAFETY		4
-16	S1225C6-65	..PIN - (V88308)		4
	AN960C10L	..WASHER		4
	MS24665-151	..COTTER PIN		4
-17	VP1073-4-14	..PIN - (V92215) (QUICK RELEASE)		4
		OR		
	SL19381-4-14	..PIN - (V16258) (QUICK RELEASE)		
R -18	MIL-W-83420	..WIRE ROPE (REF C-12-114-000/CF-446)		AR
R	MS20659-107	..TERMINAL LUG		1
	BUR610-2	..SWAGING SLEEVE		1
	41A-61309-802	..JET PIPE ASSY - REAR SECTION		1
-19	41A-61309-2	...WELD ASSY - JET PIPE		1
-20	41A-61309-58	...WELD ASSY - JET PIPE SEGMENT		1
-21	41A-61309-66	...SEGMENT - JET PIPE (UPPER, LH & RH)		3
-22	41A-61309-68	...SEGMENT - JET PIPE		1
-23	41A-61309-70	...SEGMENT - JET PIPE		1
-24	41A-61309-72	...SEGMENT - JET PIPE		1
-25	MS24693C271	...SCREW		15
	MS20500-1032	...NUT		15
-26	41A-61304-800	..RING - JET PIPE		2
-27	41A-61313-8	..RING - JET PIPE		2
-28	41A-61300-72	..SHIM - (UPPER RH & LOWER LH)		AR
	41A-61300-73	..SHIM - (UPPER LH & LOWER RH)		AR
-29	NAS1004-5A	..BOLT		36
-30	41A-61317	..PIN - JET PIPE SPECIAL TAPERED		2
	AN960C416	..WASHER		2
	MS20500-428	..NUT		38
-31	41A-61312	..FITTING - JET PIPE REAR MOUNTING CLEVIS		2
-32	NAS1004-16A	..BOLT		4
	MS20500-428	..NUT		4
-33	22866-5	..BLANKET - UPPER (V12305) (JET PIPE) (IAW 41G60004-5)		4
	22866-3	..BLANKET - LOWER (V12305) (JET PIPE) (IAW 41G60004-7)		4
-34	121009-1	..BLANKET - (V12305) (JET PIPE) (IAW 41A60507-6)		1
-35	22866-9	..BLANKET - UPPER (V12305) (JET PIPE) (IAW 41G60004-9)		3
-36	22866-13	..BLANKET - LOWER (V12305) (JET PIPE) (IAW 41G60004-13)		3

FIGURE AND INDEX NUMBER	GROUP POWER PLANT MAJOR ASSEMBLY JET PIPE & DRAIN PART NUMBER	1 2 3 4 5 6 7 NOMENCLATURE	EFFEC-TIVITY	UNITS PER ASSY
2-5-3 -37	121009-4	..BLANKET - (V12305) (JET PIPE) (IAW 41A-60507-12)		1
	41A-61300-36	..TURNBUCKLE ASSY - JET PIPE SECURING LOWER		1
	41A-61300-38	..TURNBUCKLE ASSY - JET PIPE SECURING SIDE		1
-38	2BREM4A	...ROD END - (V81376)		1
-39	NAS509-5	...NUT		1
-40	41A-61300-18	...BARREL - TURNBUCKLE		1
-41	NAS509L5	...NUT		1
-42	2BREMLH4A	...ROD END - (V81376)		1
-43	41A-61310	..CLEVIS - JET PIPE MOUNTING		2
-44	NAS1004-10A	..BOLT		4
	MS20500-428	..NUT		4
	41A-61315-10	..DRAIN ASSY - JET PIPE LOWER		1
-45	41A-61314	...SCUPPER ASSY - JET PIPE DRAIN		1
	NAS1004-6A	...BOLT		1
-46	AE1002208G0160	...HOSE ASSY - (V69705)		1
-47	41A-61308	.CABLE ASSY - JET PIPE SUSPENSION		2
-48	NAS1003-2A	.BOLT		2
	AN960-10	.WASHER		2
	MS20500-1032	.NUT		2
-49	NAS1003-6A	.BOLT		2
	AN960C10	.WASHER		2
	MS20500-1032	.NUT		2
-50	41A-61311	BRACKET - JET PIPE REAR END MOUNTING		2
-51	NAS1004-2A	.BOLT		4
	S1246AB16-22-63	.WASHER - (V88308) (CLEVIS SHIM)		4
	S1246AB16-22-50	.WASHER - (V88308) (CLEVIS SHIM)		2
	S1246AB16-22-40	.WASHER - (V88308) (CLEVIS SHIM)		2
	S1246AB16-22-20	.WASHER - (V88308) (CLEVIS SHIM)		2
-52	MS21042L4	.NUT - (CLEVIS RETAINING)		2

-000-

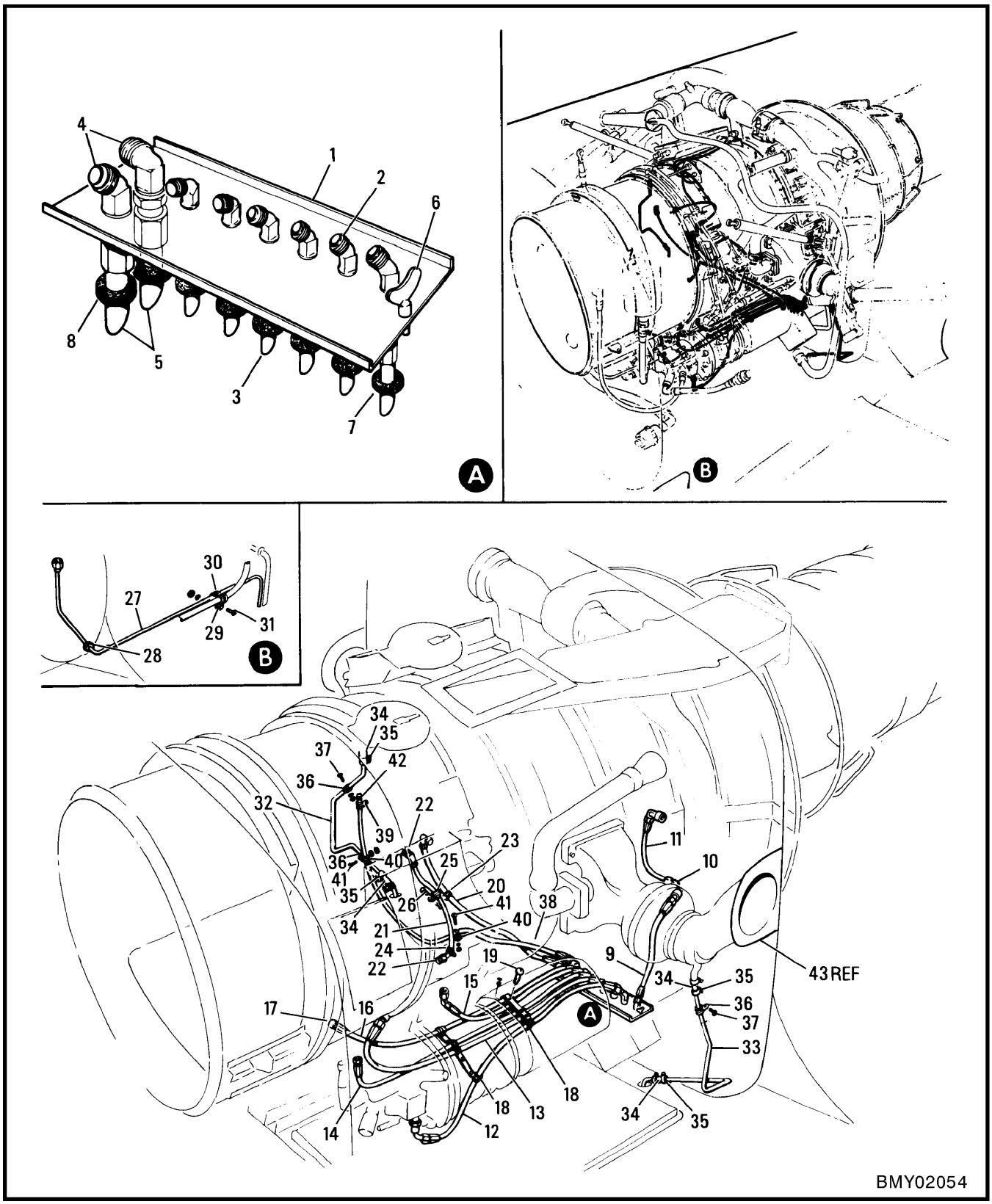

Figure 2-5-4 Power Plant Drains

FIGURE AND INDEX NUMBER	GROUP POWER PLANT MAJOR ASSEMBLY POWER PLANT DRAINS PART NUMBER	1 2 3 4 5 6 7	NOMENCLATURE	EFFEC-TIVITY	UNITS PER ASSY
2-5-4 -	41A-44001-2		DRAIN INSTL - ENGINE (SEE FIG. 2-5-3)		NP
	41A-44002-2		.MANIFOLD ASSY - ENGINE DRAIN		1
- 1	41A-44002-16		..BRACKET - ENGINE DRAIN MANIFOLD		1
- 2	AN837-4		..ELBOW		6
	AN924-4		..NUT		6
	AN960PD716		..WASHER		6
- 3	41A-44002-12		..TUBE - ENGINE DRAIN		6
	MS20819-4		..SLEEVE		6
	AN818-4D		..NUT		6
- 4	AN833-6D		..ELBOW		2
	AN924-6		..NUT		2
	AN960PD916		..WASHER		2
- 5	41A-44002-14		..TUBE		2
	MS20819-6		..SLEEVE		2
	AN818-6D		..NUT		2
- 6	26S8-2		..STUD - (V71286)		2
- 7	MS35489-6		.GROMMET		6
- 8	MS35489-11		.GROMMET		2
- 9	AE1002208E0090	*	.HOSE ASSY - (V69705)		1
-10	AN832-4		.UNION		1
	AN924-4		.NUT		1
-11	AE1002208E0090		.HOSE ASSY - (V69705)		1
-12	AE7010200E0230	*	.HOSE ASSY - (V69705)		1
-13	AE7010200E0106		.HOSE ASSY - (V69705)		1
-14	AE7010200E0220	*	.HOSE ASSY - (V69705)		1
-15	AE7010000E0270	*	.HOSE ASSY - (V69705)		1
-16	AE7010000E0230	*	.HOSE ASSY - (V69705)		1
-17	SK2591		.ADAPTER		1
	41A-44002-40		.PLATE - DRAIN HOSE CLAMP		1
-18	MS21919WDG7		.CLAMP		9
-19	MS35207-263		.SCREW		5
	AN960PD10L		.WASHER		5
	MS21042L3		.NUT		5
-20	AE7010200G0184	*	.HOSE - (V69705)		1
-21	AE1002359E0174		.HOSE ASSY - (V69705) (OIL PRESS. TRANSMITTER)		1
-22	AN815-4		.UNION		2
	MS28778-4		.PACKING		2
-23	MS21919WDG9		.CLAMP		1
-24	MS21919WDG7		.CLAMP		1
-25	MS21919WDG5		.CLAMP		2
-26	MS35207-263		.SCREW		2
	AN960PD10L		.WASHER		2
	MS21042L3		.NUT		2
	41A-44001-4		DRAIN INSTL - POWER PLANT (SEE SECTION 3)		NP
-27	41A-44003-12		.PIPE ASSY - FUEL LOW PRESSURE SWITCH DRAIN		1
		*	IAW C-12-114-000/CF-431		
-28	MS35489-2		.GROMMET		1
-29	MS21919WDG6		.CLAMP		1
-30	MS21919WDG2		.CLAMP		1
-31	MS35207-263		.SCREW		1
	AN960PD10L		.WASHER		1
	MS21042L3		.NUT		1
-32	41A-44003-6		.PIPE - COMPRESSOR BLEED DRAIN LH		1
-33	41A-44003-8		.PIPE - COMPRESSOR BLEED DRAIN RH		1
-34	41A-44001-26		.HOSE - DRAIN PIPE SECURING		4
-35	AN737TW24		.CLAMP		8
-36	MS21919WDG5		.CLAMP		3
-37	MS35207-263		.SCREW		2
	AN960PD10L		.WASHER		2
	MS21042L3		.NUT		2
-38	AE7013033G0280		.HOSE ASSY - (V69705) (IAW C-12-114-000/CF-431)		1
-39	AN737TW26		.CLAMP		1

FIGURE AND INDEX NUMBER	GROUP POWER PLANT MAJOR ASSEMBLY POWER PLANT DRAINS PART NUMBER	1 2 3 4 5 6 7 NOMENCLATURE	EFFEC-TIVITY	UNITS PER ASSY
2-5-4 -40	MS21919WDG9	.CLAMP		2
-41	MS35207-263	.BOLT		2
	AN960PD10L	.WASHER		2
	MS21042L3	.NUT		2
-42	472	.TAPE - (V76381)		AR
-43	41A-61405	DUCT ASSY - COMPRESSOR BLEED EXIT (SEE SECTION 3)		REF
		-000-		

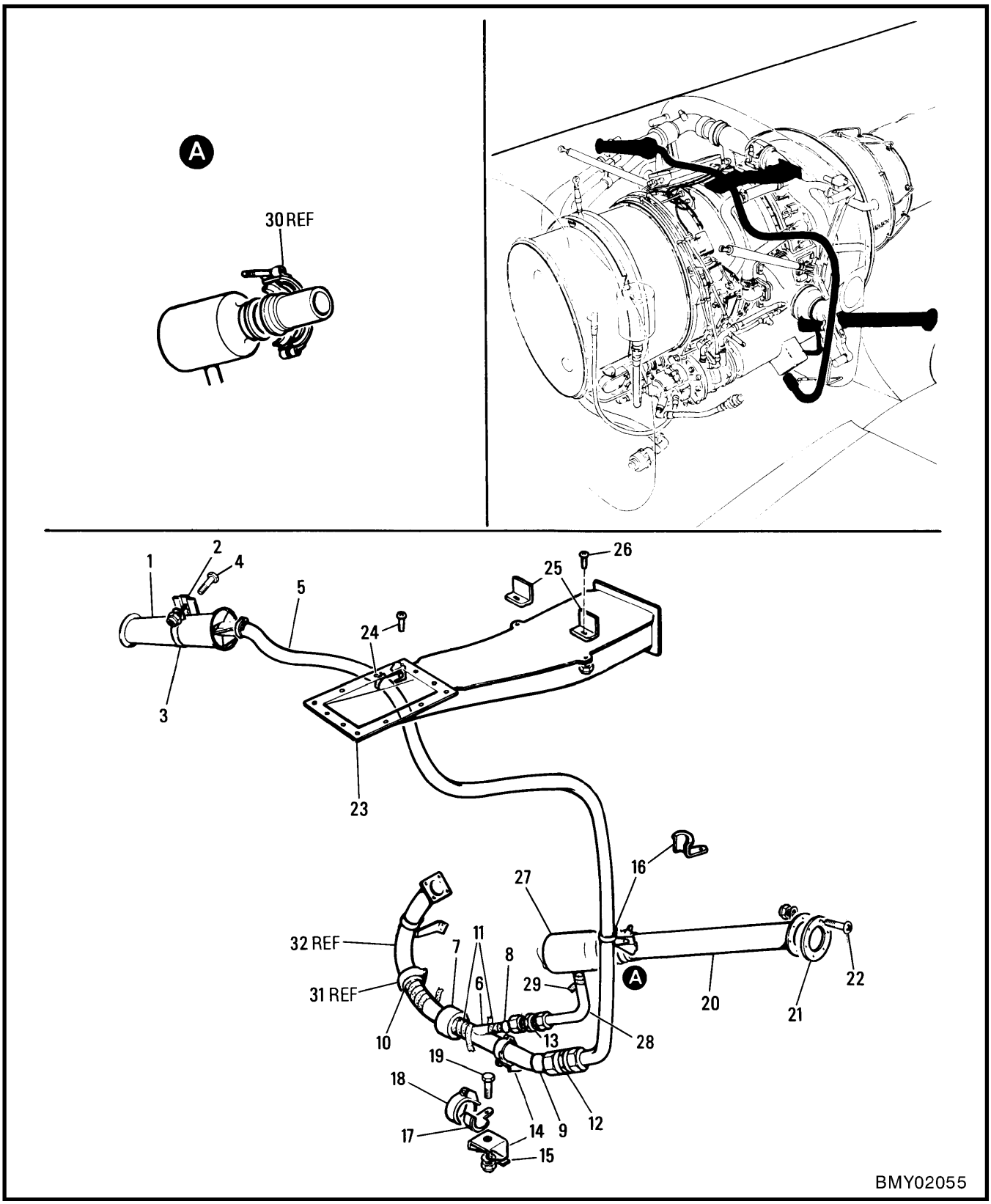

Figure 2-5-5 Zone 1 & 2 & Generator Cooling

FIGURE AND INDEX NUMBER	GROUP POWER PLANT MAJOR ASSEMBLY ZONE 1 & 2 & GENERATOR COOLING PART NUMBER	1 2 3 4 5 6 7 NOMENCLATURE	EFFEC-TIVITY	UNITS PER ASSY
2-5-5 -	41A-99000	COOLING INSTL - ZONE 1 & 2 & GENERATOR (SEE SECTION 3)		NP
	41A-99200	.JET PUMP INSTL - ZONE 1 COOLING		NP
- 1	41A-99200-2	..WELD ASSY - ZONE 1 COOLING JET PUMP		1
- 2	41A-99200-10	..BRACKET - ZONE 1 COOLING JET PUMP		1
- 3	397-40	..CLAMP - (V00502)		1
- 4	NAS501-3-6	..BOLT		1
	AN960C10L	..WASHER		1
	MS21042L3	..NUT		1
- 5	41A-99204-2	.DUCT ASSY - ZONE 1 COOLING		1
- 6	41A-99202-6	.DUCT ASSY - GENERATOR COOLING		1
- 7	10225-84	..JOINT - (V70628) (METAL FLEXIBLE WELDED) (IAW 41A-98102-6)		1
- 8	MS20819-8	..SLEEVE		1
	AN818-8	..NUT		1
- 9	MS20819-16	..SLEEVE		1
	AN818-16	..NUT		1
-10	24538-125	..FLANGE - (V69705)		1
-11	7000G	..TAPE - (V36790)		AR
	7402	..TAPE - (V36790)		AR
-12	AN815-16	.UNION		1
-13	AN815-8	.UNION	001-075	1
	AN837-8	.UNION	076-	1
-14	41A-99202-24	.BRACKET - SUPPORT		3
R -15	41A-99202-26	.PACKING - INSULATION (V48482)		3
-16	41A-99201-4	.LINK - DUCT SUPPORT		2
-17	41A-99202-28	.LINK - DUCT SUPPORT		1
	41A-99202-44	.SHIM - (BETWEEN DUCT FLANGE & SKIN)		1
-18	AN737TW46	.CLAMP		4
-19	NAS501-4-4A	.BOLT		3
	AN960-416L	.WASHER		9
	MS21042L4	.NUT		3
-20	41A-99202-4	.DUCT ASSY - GENERATOR COOLING		1
R -21	41A-99202-42	.RING - INSULATING (V48482)		1
-22	NAS623-2-2	.SCREW		6
	AN960C8	.WASHER		6
	MS21042L08	.NUT		6
-23	41A-99206	.SCOOP & DUCT ASSY - ZONE 2		1
-24	NAS1202-2	.BOLT		12
	AN960C10L	.WASHER		10
-25	41A-99206-20	.BRACKET - ZONE 2 DUCT		2
-26	MS35207-264	.SCREW		2
	MS21042L3	.NUT		2
-27	41A-99202-2	DUCT ASSY - GENERATOR COOLING (SEE FIG. 2-5-1)	001-075	1
	41A-99202-50	DUCT ASSY - GENERATOR COOLING (FOR SPARES ORDER 41A-99202-60)	076-	1
		OR		
	41A-99202-60	DUCT ASSY - (SPARES FOR 41A-99202-50)	076-	
-28	S21908-0900	.HOSE - (V78570)	076-	1
	AN815-8	.UNION	076-	1
	AN818-8	.NUT		1
	MS20819-8	.SLEEVE		1
-29	7000G	.TAPE - (V36790)		AR
	7402	.TAPE - (V36790)		AR
-30	24540-150	CLAMP - (SEE FIG. 2-5-1)		REF
-31	24540-125	CLAMP - (SEE FIG. 2-5-1)		REF
-32	41A-42009-2	DUCT ASSY - ZONE 1 COOLING (SEE FIG. 2-5-1)		REF

-000-

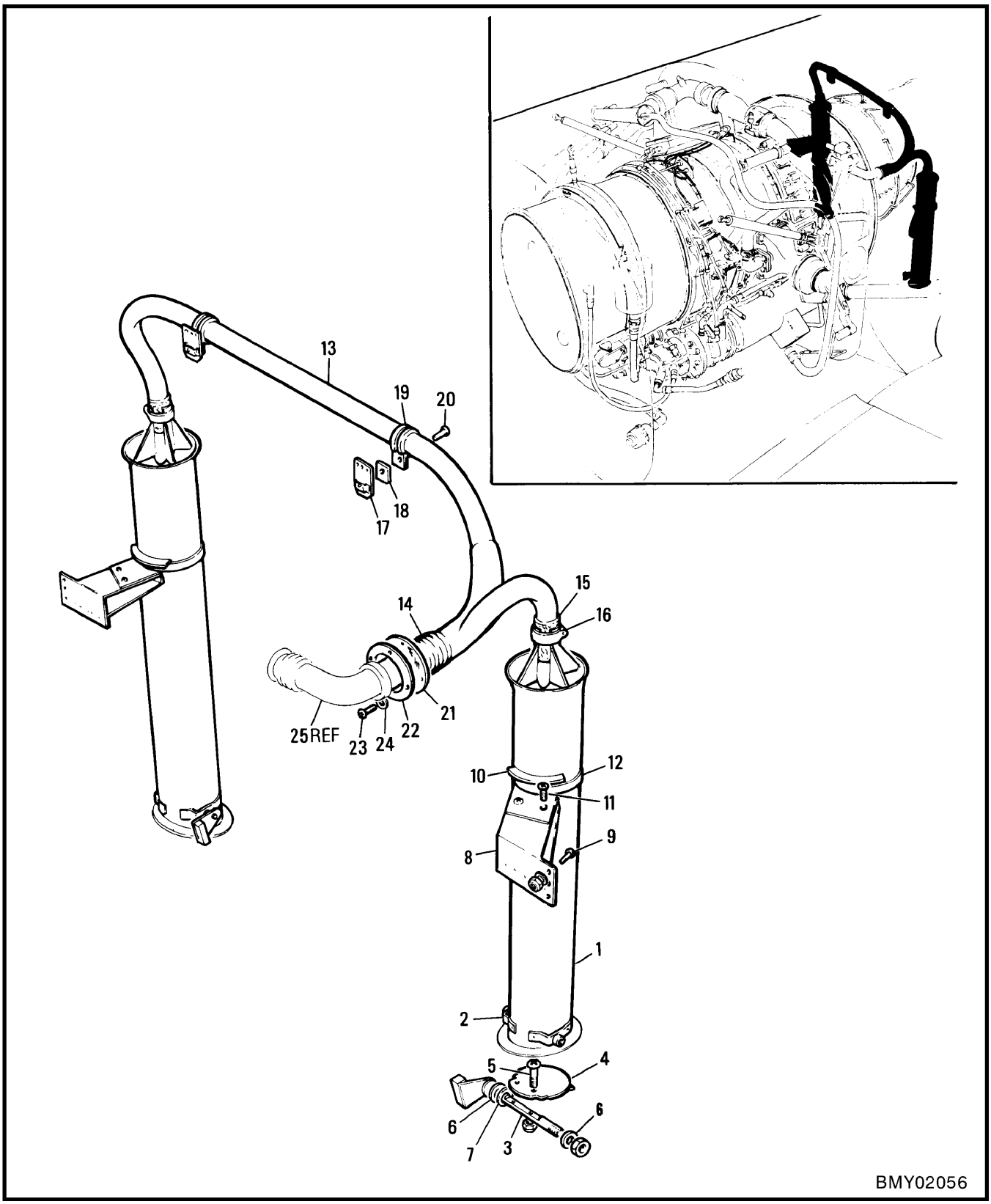

Figure 2-5-6 Zone 2 Cooling Jet Pumps

FIGURE AND INDEX NUMBER	GROUP POWER PLANT MAJOR ASSEMBLY ZONE 2 COOLING JET PUMPS PART NUMBER	1 2 3 4 5 6 7 NOMENCLATURE	EFFEC-TIVITY	UNITS PER ASSY
2-5-6 -	41A-99005	JET PUMP INSTL - ZONE 2 COOLING (SEE SECTION 3)		NP
	41A-99209-2	.JET PUMP ASSY - ZONE 2 COOLING LH		1
	41A-99209-3	.JET PUMP ASSY - ZONE 2 COOLING RH		1
- 1	41A-99209-52	..TUBE ASSY - ZONE 2 COOLING JET PUMP LH		1
	41A-99209-53	..TUBE ASSY - ZONE 2 COOLING JET PUMP RH		1
- 2	41A-99209-12	..BRACKET ASSY - VALVE PLATE (RIVETED)		2
- 3	41A-99209-50	..LEVER ASSY - VALVE PLATE LH		1
	41A-99209-51	..LEVER ASSY - VALVE PLATE RH		1
- 4	41A-99209-4	..PLATE - VALVE LH		1
	41A-99209-5	..PLATE - VALVE RH		1
- 5	MS35206-228	..SCREW		2
	MS21042L06	..NUT		2
- 6	AN960C416L	..WASHER		AR
- 7	S1236-416	..WASHER - (V88308)		AR
	MS21042L4	..NUT		1
- 8	41A-99209-18	.BRACKET ASSY - ZONE 2 COOLING JET PUMP LH		1
	41A-99209-19	.BRACKET ASSY - ZONE 2 COOLING JET PUMP RH		1
- 9	MS35207-262	.SCREW		6
	AN960D10L	.WASHER		6
	MS21042L3	.NUT		6
-10	41A-99209-24	.CLIP - ZONE 2 COOLING JET PUMP		2
-11	MS51958-63	.SCREW		4
-12	QS200M56S	.CLAMP - (V08484)		2
-13	41A-99209-26	.TUBE ASSY - ZONE 2 COOLING		1
-14	10225-68-1	..JOINT - (V70628) (METAL FLEXIBLE) (IAW 41A-98102-8)		1
R -15	G-88	.SHEET - (V48482) (CLOTH, GLASS)		AR
-16	AN737RM46	.CLAMP		2
-17	41A-99209-40	.PLATE ASSY - SUPPORT		2
-18	41A-99209-44	.SPACER		2
-19	397-16	.CLAMP - (V00502)		2
-20	MS51958-63	.SCREW		2
-21	AMS3783	.GASKET		1
-22	41A-99209-46	.RETAINER		1
-23	MS51958-64	.SCREW		4
-24	NAS43HT3-14	.SPACER		4
-25	41A-99208	ELBOW ASSY - ZONE 2 COOLING FLEXIBLE (SEE FIG. 2-5-1)		REF

-000-

SECTION 6

FUEL SYSTEM

TABLE OF CONTENTS

Figure	Title	Page
2-6-1	Fuel System Schematic	2-6-2
2-6-2	Forward Fuselage Fuel System & Forward Cell	2-6-4
2-6-3	Centre Fuel Cell	2-6-8
2-6-4	Rear Fuel Cell	2-6-12
2-6-5	Fuel Collector Tank & Feed System	2-6-16
2-6-6	Fuel Vent System	2-6-20
2-6-7	Fuselage Auxiliary Fuel System	2-6-24
2-6-8	Aux Fuel Air Pressure Regulator Panel	2-6-28
2-6-9	Auxiliary Fuel Tanks & Disconnects	2-6-30
2-6-10	Fuselage Pylons - Aux Fuel or Smoke Tanks	2-6-32
2-6-11	Smoke System Tank (For Snowbird Aircraft Only)	2-6-36
2-6-12	Smoke System Piping (For Snowbird Aircraft Only)	2-6-38
2-6-13	Smoke System Pressure Regulator (For Snowbird Arcft Only)	2-6-40
2-6-14	Smoke System Pressure Regulator (For Snowbird Arcft Only, Post 114-003-00)	2-6-42

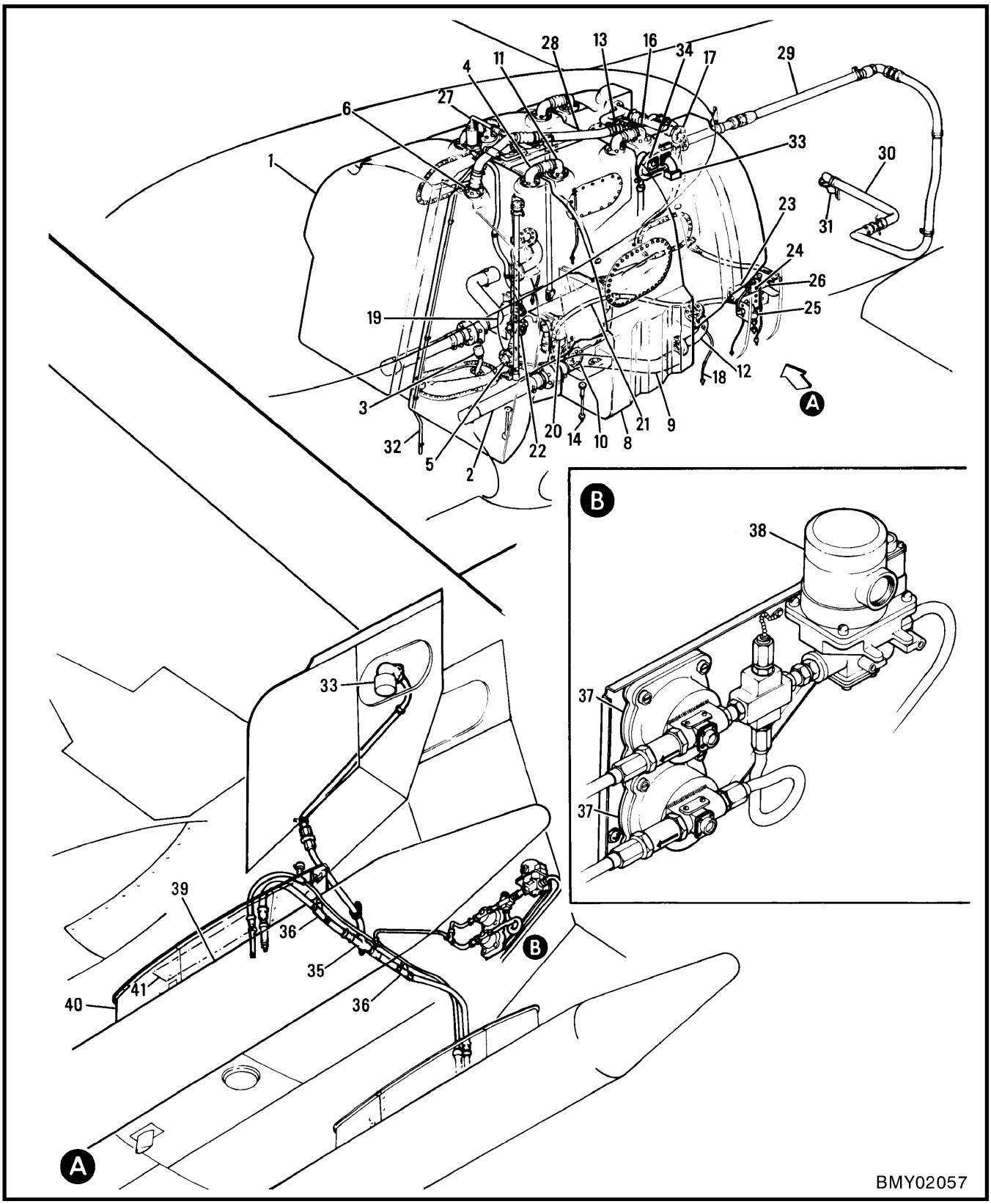

Figure 2-6-1 Fuel System Schematic

FIGURE AND INDEX NUMBER	GROUP FUEL SYSTEM MAJOR ASSEMBLY FUEL SYSTEM SCHEMATIC PART NUMBER	1 2 3 4 5 6 7 NOMENCLATURE	EFFEC-TIVITY	UNITS PER ASSY
2-6-1 - 1	FCD60815	CELL - FUEL FORWARD (SEE FIG. 2-6-2)		REF
- 2	41A-65229	PIPE - FUEL FORWARD CELL BALANCE (SEE FIG. 2-6-2)		REF
- 3	FL203-1	SWITCH ASSY - (FUEL LOW LEVEL) (SEE FIG. 2-6-2)		REF
- 4	41A-65221	CONNECTOR - FUEL CELL VENT INTERCONNECT (SEE FIG. 2-6-2)		REF
- 5	41A-65210	CONNECTOR - COLLECTOR TANK FEED V-CLAMP (SEE FIG. 2-6-2)		REF
- 6	41A-65235	CONNECTOR - FUEL CELL VENT (SEE FIG. 2-6-2)		REF
- 7	41A-65209-36	TUBE - CAVITY DRAIN (SEE FIGURE 2-6-2)		REF
- 8	FCD60816	CELL - FUEL CENTRE (SEE FIG. 2-6-3)		REF
- 9	41A-65228	PIPE - CENTRE CELL BALANCE (SEE FIG. 2-6-3)		REF
-10	41A-65210	CONNECTOR - COLLECTOR TANK FEED V-CLAMP (SEE FIG. 2-6-3)		REF
-11	41A-65221	CONNECTOR - FUEL CELL VENT INTERCONNECT (SEE FIG. 2-6-3)		REF
-12	41A-65227	CONNECTOR - FUEL CENTRE TO REAR CELL (SEE FIG. 2-6-3)		REF
-13	41A-65221	CONNECTOR - FUEL CELL VENT INTERCONNECT (SEE FIG. 2-6-3)		REF
-14	41A-65201-75	TUBE - CAVITY DRAIN (SEE FIG. 2-6-3)		REF
-15	FCD60818	CELL - FUEL REAR (SEE FIG. 2-6-4)		REF
-16	41A-65221	CONNECTOR - FUEL CELL VENT INTERCONNECT (SEE FIG. 2-6-4)		REF
-17	AN801D16	CONNECTION - (SEE FIG. 2-6-4)		REF
-18	41A-65202-24	TUBE - CAVITY DRAIN (SEE FIG. 2-6-4)		REF
-19	41A-65601	TANK ASSY - FUEL (COLLECTOR) (SEE FIG. 2-6-5)		REF
-20	RR12060B	PUMP ASSY - FUEL BOOSTER (SEE FIG. 2-6-5)		REF
-21	41A-65616	LINE - BOOSTER PUMP FEED (SEE FIG. 2-6-5)		REF
-22	14-562-1	VALVE ASSY - FUEL SYS SWING CHECK (SEE FIG. 2-6-5)		REF
-23	AV16B1692D	VALVE ASSY - FUEL SHUT OFF (SEE FIG. 2-6-5)		REF
-24	700070	STRAINER ASSY - FUEL SYS (SEE FIG. 2-6-5)		REF
-25	475C62NXW	VALVE ASSY - FUEL DRAIN (SEE FIG. 2-6-5)		REF
-26	405-00217	NIPPLE - FUEL INLET QUICK DISCONNECT (SEE FIG. 2-6-5)		REF
-27	2630363	VALVE ASSY - COLLECTOR TANK VENT (SEE FIG. 2-6-6)		REF
-28	41A-65514-2	LINE ASSY - FUEL VENT (SEE FIG. 2-6-6)		REF
-29	601002-20D0240	HOSE ASSY - (FUEL VENT) (SEE FIG. 2-6-6)		REF
-30	41A-65516-4	MAST ASSY - UPPER (SEE FIG. 2-6-6)		REF
-31	41A-65516-2	MAST ASSY - LOWER (SEE FIG. 2-6-6)		REF
-32	41A-65514-8	LINE ASSY - FUEL VENT (SEE FIG. 2-6-6)		REF
-33	2660333M2	VALVE ASSY - FUEL LEVEL (SEE FIGURE 2-6-7)		REF
-34	4P10-12	VALVE - THERMAL RELIEF (SEE FIGURE 2-6-7)		REF
-35	41A-65208	MANIFOLD - AUX FUEL SYS (SEE FIGURE 2-6-7)		REF
-36	1G349-3	SWITCH - (CUT) PRESSURE (SEE FIGURE 2-6-7)		REF
-37	392904-1	REGULATOR - AIR PRESSURE (SEE FIGURE 2-6-8)		REF
-38	AV16E1274	VALVE - AIR SHUT-OFF (SEE FIGURE 2-6-8)		REF
-39	118J000-(B)	TANK ASSY - EXTERNAL FUEL (SEE FIGURE 2-6-9)		REF
-40	41G-27200-810	PYLON ASSY & INSTL (SEE FIGURE 2-6-10)		REF
-41	41G-27305-24	RACK ASSY - BOMB (SEE FIGURE 2-6-10)		REF
		-000-		

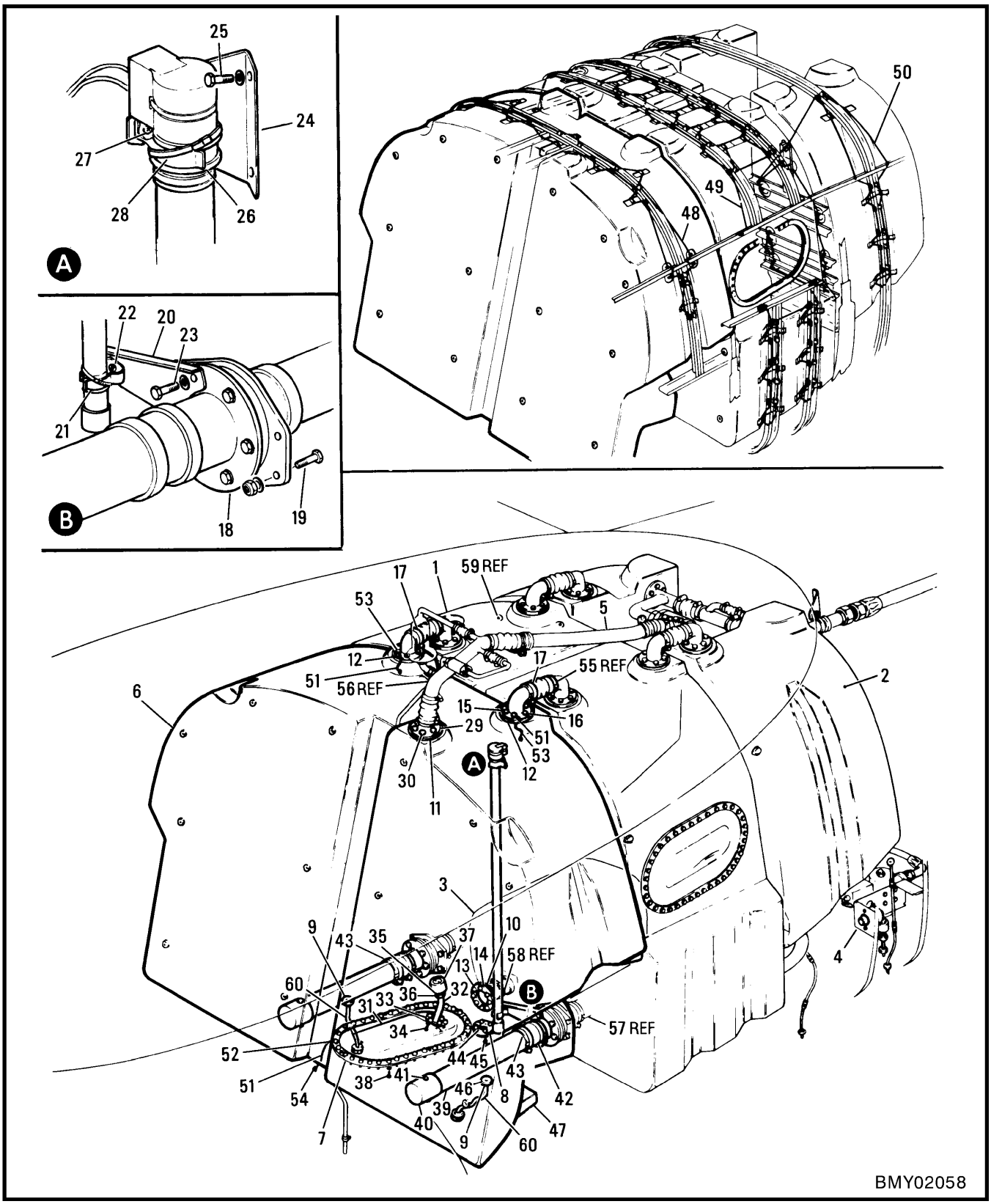

Figure 2-6-2 Forward Fuselage Fuel System & Forward Cell

FIGURE AND INDEX NUMBER	GROUP FUEL SYSTEM MAJOR ASSEMBLY FORWARD FUSELAGE FUEL SYSTEM & FORWARD CELL PART NUMBER	1 2 3 4 5 6 7 NOMENCLATURE	EFFEC-TIVITY	UNITS PER ASSY
2-6-2 -	41A-65000-2	FUEL SYS INSTL - FUSELAGE (SEE SECTION 3)		NP
- 1	41A-65201	.CELL INSTL - FUEL CENTRE (SEE FIG. 2-6-3)		REF
- 2	41A-65202	.CELL INSTL - FUEL REAR (SEE FIG. 2-6-4)		REF
- 3	41A-65600	.TANK INSTL - FUEL SYS COLLECTOR (SEE FIG. 2-6-5)		REF
- 4	41A-65400	.FEED SYS INSTL - FUEL (SEE FIG. 2-6-5)		REF
- 5	41A-65501	.VENT SYS INSTL - FORWARD FUSELAGE FUEL (SEE FIG. 2-6-6)		REF
	41A-65200	.CELL INSTL - FUEL FORWARD (MODIFIED BY NW4528142-1)		NP
- 6	FCD60815	..CELL - (V61463) (FUEL FORWARD) (IAW 41A-65060)		1
- 7	FCB25753	...GASKET - (V61463) (FUEL CELL)		2
- 8	FCB25714	...GASKET - (V61463) (FUEL CELL)		1
- 9	FCC60313	...SEAL ASSY - (V61463) (FUEL CELL)		4
-10	FCB25717	...GASKET - (V61463) (FUEL CELL)		1
-11	FCB25716	...GASKET - (V61463) (FUEL CELL)		2
-12	FCB25715	...GASKET - (V61463) (FUEL CELL)		4
-13	41A-65210	..CONNECTOR - COLLECTOR TANK FEED V-CLAMP		1
	41A-65237	..SEAL - FUEL FORWARD CELL (CONNECTOR)		1
-14	MS20073-04-04	..BOLT		8
	AN960D416	..WASHER		8
-15	41A-65221	..CONNECTOR - FUEL CELL VENT INTERCONNECT		2
-16	MS20073-04-05	..BOLT		12
	AN960D416	..WASHER		10
	S1228-8	..TAB - (V88308)		2
-17	AN737TW46	..CLAMP		2
-18	41A-65226	..CONNECTOR ASSY - FUEL FORWARD CELL (BALANCE PIPE)		2
	41A-65226-1	...CONNECTOR - FUEL FWD CELL (BALANCE PIPE)		1
	MS21209F4-15	...INSERT		12
	MS29513-248	..PACKING		2
	41A-65200-40	..PACKING		2
-19	NAS6204-6	..BOLT		8
	AN960D416	..WASHER		8
	MS21042L4	..NUT		8
-20	41A-65254	..BRACKET ASSY - PROBE LOWER SUPPORT		1
-21	44-62799	..SPRING - PROBE MOUNTING		1
-22	MS51958-62	..SCREW		1
	AN960C10	..WASHER		1
-23	AN4-6A	..BOLT		12
	AN960D416	..WASHER		12
-24	41A-65253	..BRACKET ASSY - PROBE UPPER SUPPORT		1
-25	NAS1003-10	..BOLT		2
	AN960C10	..WASHER		2
-26	44-62799	..SPRING - PROBE MOUNTING		1
-27	MS51958-62	..SCREW		1
	AN960C10	..WASHER		1
-28	MS3367-2-9	..STRAP - (IAW C-12-114-000/CF-237)		1
-29	41A-65235	..CONNECTOR - FUEL CELL VENT		1
-30	MS20073-04-05	..BOLT		6
	AN960D416	..WASHER		6
	41A-65225-2	..DOOR ASSY - FUEL FORWARD CELL ACCESS (I)		1
-31	41A-65225-6	...DOOR - FUEL FORWARD CELL ACCESS		1
-32	41A-65236	...ADAPTER - FUEL LEVEL SWITCH		1
-33	41A-65241	...GASKET - FUEL LEVEL SWITCH ADAPTER		1
-34	NAS1103-6	...BOLT		6
	AN960-10L	...WASHER		6
-35	41A-65260	...UNION - FUEL LEVEL SWITCH		1
-36	MS29512-6	...GASKET		2
-37	41A-50708	...SWITCH ASSY - (FUEL LOW LEVEL)		1
-38	MS20073-04-05	..BOLT		36

FIGURE AND INDEX NUMBER	GROUP FUEL SYSTEM MAJOR ASSEMBLY FORWARD FUSELAGE FUEL SYSTEM & FORWARD CELL PART NUMBER	1 2 3 4 5 6 7 NOMENCLATURE	EFFEC-TIVITY	UNITS PER ASSY
2-6-2 -	AN960D416	..WASHER		34
	S1228-8	..TAB - (V88308)		2
-39	41A-65229	..PIPE - FUEL FORWARD CELL BALANCE		2
-40	41A-65245	..GUARD - FUEL CELL (BALANCE PIPE)		2
-41	NAS1003-58A	..BOLT		2
	NAS42DD6-200	..SPACER		2
	600-015-10-0S	..STAT-O-SEAL - (V45681)		4
	AN960PD10	..WASHER		4
-42	41A-65200-27	..HOSE		2
	S1296	..STRIP - (V88308)		2
-43	AN737TW107	..CLAMP		4
-44	MS29528-6	..VALVE		1
		OR		
	2D100B	..DRAIN COCK - (V82829)		
	MS29512-6	..O-RING		1
-45	MS20073-04-03	..BOLT		4
	AN960D416L	..WASHER		4
-46	41A-65246	..GROMMET - CAVITY DRAIN CONNECTOR		2
-47	41A-65234	..BLOCK - FUEL FORWARD CELL LH		1
	41A-65234-1	..BLOCK - FUEL FORWARD CELL RH		1
	41A-65239	..BLOCK - FUEL FORWARD CELL LH		1
	41A-65239-1	..BLOCK - FUEL FORWARD CELL RH		1
	41A-65232	..BLOCK - FUEL FORWARD CELL LH		1
	41A-65232-1	..BLOCK - FUEL FORWARD CELL RH		1
	41A-65233	..BLOCK - FUEL FORWARD CELL LH		1
	41A-65233-1	..BLOCK - FUEL FORWARD CELL RH		1
	41A-65257	..BLOCK - FUEL FORWARD CELL		2
	JAN-P-127	..TAPE - TYPE 1 GRADE B		AR
	41A-65244	.LACING INSTL - FUEL CELL		NP
	41A-65244-2	..LACING INSTL - FUEL FORWARD CELL		NP
-48	MIL-C-5040	...CORD - NYLON		AR
	41A-65244-4	..LACING INSTL - FUEL CENTRE CELL LH		NP
	41A-65244-6	..LACING INSTL - FUEL CENTRE CELL RH		NP
-49	MIL-C-5040	...CORD - NYLON		AR
	41A-65244-8	..LACING INSTL - FUEL REAR CELL LH		NP
	41A-65244-9	..LACING INSTL - FUEL REAR CELL RH		NP
-50	MIL-C-5040	...CORD - NYLON		AR
	NW4528142-1	JUMPER INSTL - BONDING (MODIFYING 41A-65200) (SEE SECTION 12)		REF
-51	M83413/8-A05BB	.JUMPER ASSY		3
-52	MS35207-263	.SCREW		1
-53	MS35207-265	.SCREW		4
-54	NAS1103-3	.BOLT		1
	AN960JD10L	.WASHER		11
	AN960-10L	.WASHER		5
	MS35338-43	.WASHER-LOCK		5
	MS21043L3	.NUT		6
-55	41A-65201-2	HOSE - FWD VENT CONNECTOR (SEE FIG. 2-6-3)		REF
-56	41A-65512	LINE ASSY - FUEL VENT (SEE FIG. 2-6-6)		REF
-57	41A-65201-6	HOSE - (BALANCE PIPE CONN) (SEE FIG. 2-6-3)		REF
-58	50175-200	CLAMP - (SEE FIG. 2-6-5)		REF
-59	FCC20458	PIN ASSY - (SEE SECTION 3)		REF
	K41A-60018 *	KIT - FUEL SYST INSTL AUX TANKS (SEE FIG. 2-6-3)		REF
-60	41A-65209-36	.LINE ASSY - CAVITY DRAIN LH		1
	41A-65209-34	.LINE ASSY - CAVITY DRAIN RH		1
	AN737TW26	.CLAMP		2
	MS35489-11	.GROMMET		3
		-000-		
	*	IAW C-12-114-000/CD-031		

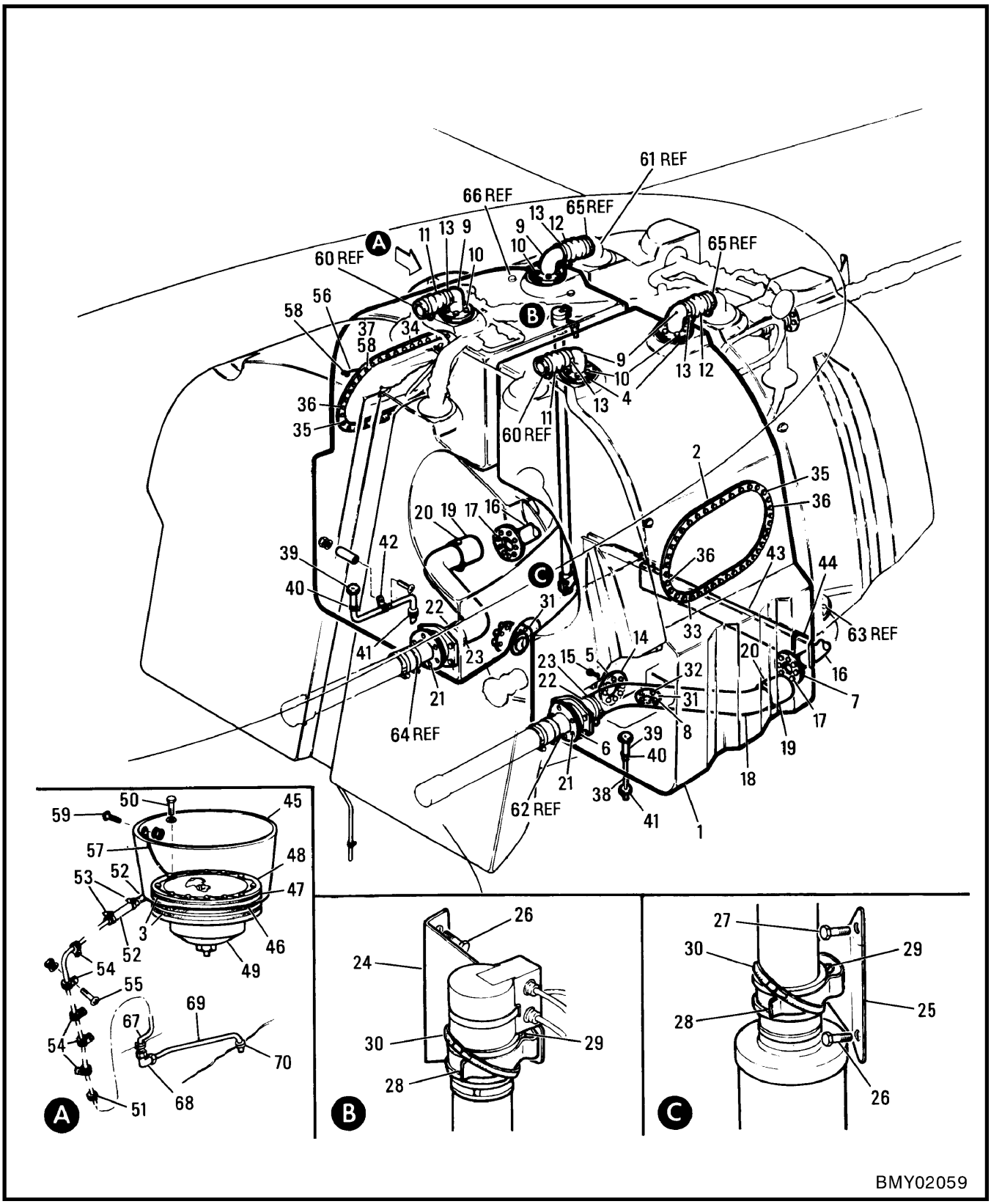

Figure 2-6-3 Centre Fuel Cell

FIGURE AND INDEX NUMBER	GROUP FUEL SYSTEM MAJOR ASSEMBLY CENTRE FUEL CELL PART NUMBER	1 2 3 4 5 6 7 NOMENCLATURE	EFFEC-TIVITY	UNITS PER ASSY
2-6-3 -	41A-65201	CELL INSTL - FUEL CENTRE LH (MODIFIED BY NW4528142-1) (SEE FIG. 2-6-2)		NP
	41A-65201-1	CELL INSTL - FUEL CENTRE RH (MODIFIED BY NW4528142-1)		NP
- 1	FCD60816	.CELL ASSY - (V61463) (FUEL CENTRE LH) (IAW 41A-65061)		1
	FCD60817	.CELL ASSY - (V61463) (FUEL CENTRE RH) (IAW 41A-65061-1)		1
- 2	FCB25753	..GASKET - (V61463)		2
- 3	FCB25722	..GASKET - (V61463) (RH CELL)		2
- 4	FCB25715	..GASKET - (V61463)		8
- 5	FCB25717	..GASKET - (V61463)		1
- 6	FCC65217	..FITTING ASSY - (V61463)		1
- 7	FCB25716	..GASKET - (V61463)		2
- 8	FCB25714	..GASKET - (V61463)		1
- 9	41A-65221	.CONNECTOR - FUEL CELL VENT INTERCONNECT		2
-10	MS20073-04-05	.BOLT		12
	AN960D416	.WASHER		12
-11	41A-65201-2	.HOSE - FORWARD VENT CONNECTOR		1
-12	41A-65201-4	.HOSE - REAR VENT CONNECTOR		1
	S1296	.STRIP - (V88308)		2
-13	AN737TW46	.CLAMP		2
-14	41A-65210	.CONNECTOR - COLLECTOR TANK FEED V-CLAMP		1
	41A-65238	.SEAL - FUEL CENTRE CELL		1
-15	MS20073-04-03	.BOLT		8
	AN960D416	.WASHER		8
-16	41A-65227	.CONNECTOR - FUEL CENTRE TO REAR CELL		1
-17	MS20073-04-05	.BOLT		6
	AN960D416	.WASHER		6
-18	41A-65228	.PIPE - FUEL CENTRE CELL BALANCE LH		1
	41A-65228-1	.PIPE - FUEL CENTRE CELL BALANCE RH		1
-19	41A-65245	.GUARD - FUEL CELL (BALANCE PIPE)		1
-20	NAS1003-58A	.BOLT		1
	NAS42DD6-200	.SPACER		1
	AN960PD10	.WASHER		2
	600-015-10-0S	.STAT-O-SEAL - (V45681)		1
-21	AN4-6A	.BOLT		6
	AN960D416	.WASHER		6
	MS29513-248	.PACKING		1
-22	41A-65201-6	.HOSE		1
-23	AN737TW107	.CLAMP		2
-24	41A-65255	.BRACKET ASSY - UPPER PROBE SUPPORT (STBD)		1
-25	41A-65256	.BRACKET ASSY - LOWER PROBE SUPPORT (STBD)		1
	600-015-10-0S	.STAT-O-SEAL - (V45681) (STBD)		4
-26	NAS1003-11	.BOLT - (STBD)		3
-27	NAS1003-13	.BOLT - (STBD)		1
	AN960C10	.WASHER - (STBD)		4
-28	44-62799	.SPRING - PROBE MOUNTING (STBD)		2
-29	AN520C10R7	.SCREW - (SPRING) (STBD)		2
	AN960C10	.WASHER - (STBD)		2
-30	MS17821-2-9	.STRAP - (IAW C-12-114-000/CF-237)		2
-31	MS29528-6	.VALVE ASSY		1
		OR		
	2D100B	.DRAIN COCK - (V82829)		
	MS29512-6	.GASKET		1
-32	MS20073-04-03	.BOLT		4
	AN960D416	.WASHER		4
-33	41A-65225-4	.DOOR - FUEL CELL ACCESS (PORT) (I)		1
-34	41A-65225-16	.DOOR - FUEL CELL ACCESS (STBD) (I)		1
-35	MS20073-04-04	.BOLT		36
	AN960D416	.WASHER		35
-36	AN507-1032R6	.SCREW		2
-37	S1228-8	.TAB - (V88308)		1
-38	41A-65201-8	.TUBE - CAVITY DRAIN (LH)		1

FIGURE AND INDEX NUMBER	GROUP FUEL SYSTEM MAJOR ASSEMBLY CENTRE FUEL CELL PART NUMBER	1 2 3 4 5 6 7 NOMENCLATURE	EFFEC-TIVITY	UNITS PER ASSY
2-6-3	41A-65201-75	.TUBE - CAVITY DRAIN (RH)		1
-39	41A-65246	.GROMMET - CAVITY DRAIN CONNECTOR		1
-40	AN737TW26	.CLAMP		1
-41	MS35489-11	.GROMMET		1
-42	316-6-6	.CLIP - (V00502) (RH TUBE)		1
	MS35207-267	.SCREW - (RH TUBE)		1
	NAS43DD3-32	.SPACER - (RH TUBE)		1
	AN960D10	.WASHER - (RH TUBE)		1
	MS21042L3	.NUT - (RH TUBE)		1
-43	41A-65230-2	.BLOCK - FUEL CENTRE CELL LH		1
	41A-65230-3	.BLOCK - FUEL CENTRE CELL RH		1
-44	41A-65230-4	.BLOCK - FUEL CENTRE CELL LH		1
	41A-65230-5	.BLOCK - FUEL CENTRE CELL RH		1
	41A-65231	.BLOCK - FUEL CENTRE CELL LH		1
	41A-65231-1	.BLOCK - FUEL CENTRE CELL RH		1
	41A-65259	.BLOCK - FUEL CENTRE CELL LH		1
	41A-65259-1	.BLOCK - FUEL CENTRE CELL RH		1
	JAN-P-127	.TAPE - TYPE 1 GRADE B		AR
	41A-65243	FILLER INSTL - FUEL (SEE SECTION 3)		NP
-45	41A-65243-2	.FILLER ASSY - FUEL		1
-46	41A-65243-50	.GASKET		1
-47	41A-65261	.SPACER - CENTRE TANK FILLER CAP RING		1
	41A-65243-14	.CAP & ADAPTER ASSY - FUEL FILLER		1
-48	3518	..ADAPTER - (V99321) (FUEL FILLER)		1
-49	41A-65243-28	..CAP - FUEL FILLER		1
	MS29513-12	...O-RING		1
	MS29513-339	...O-RING		1
-50	MS20073-04-17	.BOLT		12
	AN960D416	.WASHER		11
-51	MS35489-11	.GROMMET		1
-52	41A-65243-27	.HOSE - FUEL FILLER		1
-53	AN737TW26	.CLAMP		2
-54	MS21919WDG6	.CLAMP		5
-55	MS35207-263	.SCREW		5
	AN960-10	.WASHER		5
	MS21042L3	.NUT		3
	NW4528142-1	JUMPER INSTL - BONDING (MODIFYING 41A-65201 & 41A-65201-1) (SEE SECTION 12)		REF
-56	M83413/8-A05BB	.JUMPER ASSY - (PORT & STBD)		2
-57	M83413/8-A04BC	.JUMPER ASSY		1
-58	MS35207-263	.SCREW		4
-59	MS35207-265	.SCREW		1
	AN960JD10L	.WASHER		10
	AN960-10L	.WASHER		5
	MS35338-43	.WASHER-LOCK		5
	MS21042L3	.NUT		5
-60	AN737TW46	CLAMP - (SEE FIG. 2-6-2)		REF
-61	41A-65221	CONNECTOR - FUEL CELL VENT INTERCONNECT (SEE FIG. 2-6-4)		REF
-62	41A-65226	CONNECTOR ASSY - FUEL FORWARD CELL (BALANCE PIPE) (SEE FIG. 2-6-2)		REF
-63	MS20073-04-04	BOLT - (SEE FIG. 2-6-4)		REF
-64	AN737TW107	CLAMP - (SEE FIG. 2-6-2)		REF
-65	AN737TW46	CLAMP - (SEE FIG. 2-6-4)		REF
-66	FCC20458	PIN ASSY - (SEE SECTION 3)		REF
	K41A-60018 *	KIT - FUEL SYSTEM INSTL AUX TANKS (SEE FIG. 2-6-7)		REF
-67	K41A-60018-127	.ELBOW ASSY - FILLER SCUPPER (WELDED)		1
	MS21922-6	.SLEEVE		1
	MS21921-6D	.NUT		1
-68	MS21904D6	.ELBOW		1
-69	41A-65209-38	.LINE ASSY - FUEL FILLER DRAIN		1
-70	MS35489-11	.GROMMET		1
		-000-		
	*	IAW C-12-114-000/CD-031		

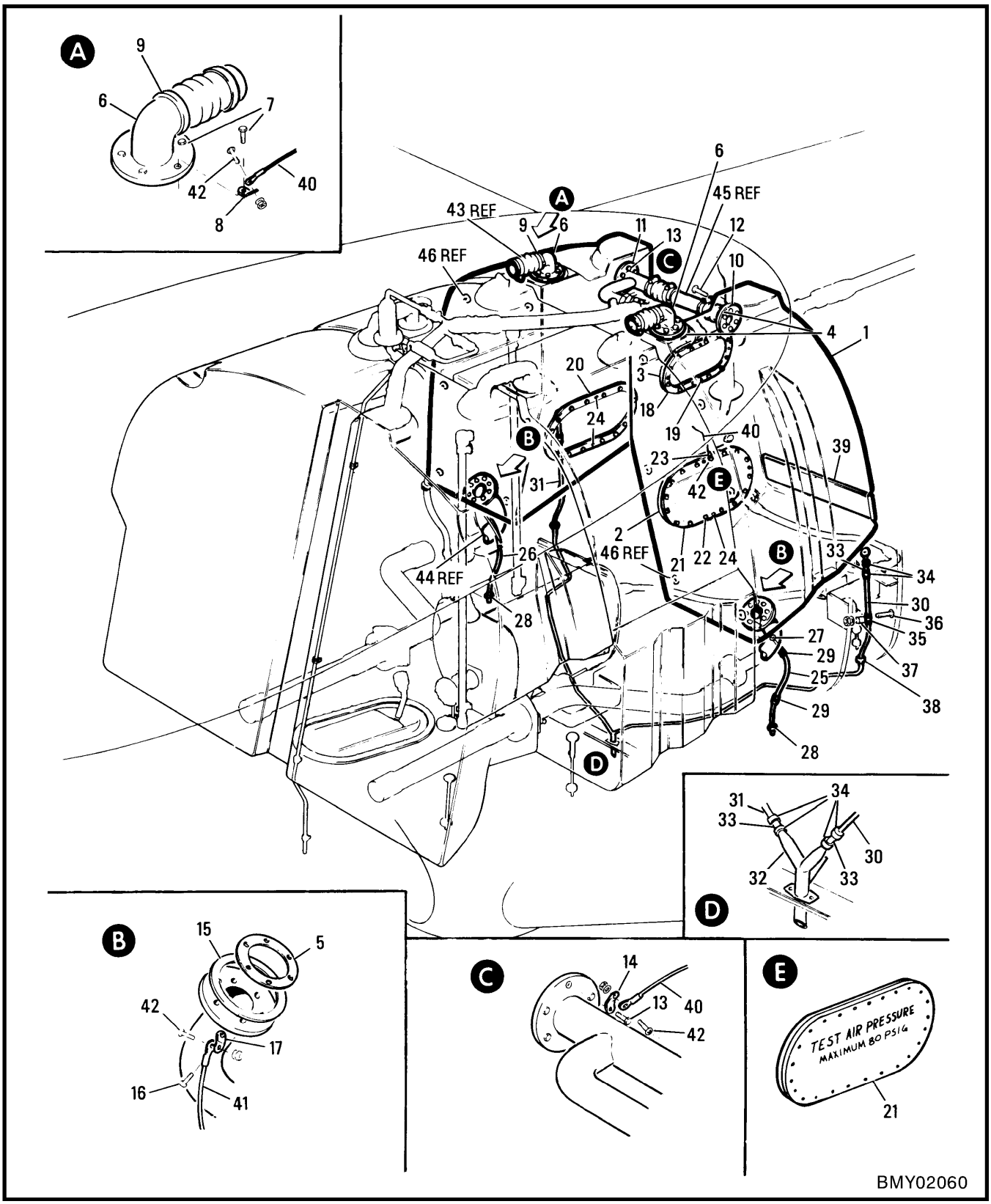

Figure 2-6-4 Rear Fuel Cell

FIGURE AND INDEX NUMBER	GROUP FUEL SYSTEM MAJOR ASSEMBLY REAR FUEL CELL PART NUMBER		1 2 3 4 5 6 7 NOMENCLATURE	EFFEC-TIVITY	UNITS PER ASSY
2-6-4 -	41A-65202		CELL INSTL - FUEL REAR LH (SEE FIG. 2-6-2) (MODIFIED BY NW4528142-1)		NP
	41A-65202-1		CELL INSTL - FUEL REAR RH (MODIFIED BY NW4528142-1)		NP
- 1	FCD60818		.CELL - (V61463) (FUEL REAR LH) (IAW 41A-65062)		1
	FCD60819		.CELL - (V61463) (FUEL REAR RH) (IAW 41A-65062-1)		1
- 2	FCB25752		..GASKET - (V61463) (FUEL CELL)		2
- 3	FCA25751		..GASKET - (V61463) (FUEL CELL)		2
- 4	FCB25715		..GASKET - (V61463) (FUEL CELL)		4
- 5	FCB25716		..GASKET - (V61463) (FUEL CELL)		1
- 6	41A-65221		.CONNECTOR - FUEL CELL VENT INTERCONNECT		1
- 7	MS20073-04-04		.BOLT		6
	AN960D416		.WASHER		5
- 8	S1228-8		.TAB - (V88308)		1
- 9	AN737TW46		.CLAMP		1
-10	AN801D16		.CONNECTION - (PORT)		1
-11	41A-65222		.CONNECTOR ASSY - FUEL CELL (STBD)		1
	MS20819-20		..SLEEVE		1
	AN818-20D		..NUT		1
-12	MS20073-04-05		.BOLT - (PORT)		6
-13	MS20073-04-04		.BOLT - (STBD)		6
	AN960D416		.WASHER		5
-14	S1228-8		.TAB - (V88308)		1
-15	41A-65240		.SEAL - FUEL REAR CELL		1
-16	MS20073-04-05		.BOLT		6
	AN960D416		.WASHER		5
-17	S1228-8		.TAB - (V88308)		1
-18	41A-65211-800	*	.DOOR ASSY - FUEL CELL ACCESS (SEE FIG. 2-6-7)		REF
-19	MS24693-270		.SCREW - (CELL FITTING TO STRUCT PORT)		2
-20	41A-65213		.DOOR - REAR CELL LH ACCESS (I)		1
-21	41A-65213	*	.DOOR - REAR CELL RH ACCESS (I) (MODIFIED)		1
-22	MS20073-04-03		.BOLT		24
	AN960D416		.WASHER		23
-23	S1228-8		.TAB - (V88308)		1
-24	MS24693-270		.SCREW		2
-25	41A-65209-32	*	.TUBE - CAVITY DRAIN LH (FS 259)		1
-26	41A-65209-30	*	.TUBE - CAVITY DRAIN RH (FS 259)		1
-27	41A-65246		.GROMMET - CAVITY DRAIN CONNECTOR		1
	AN737TW26		.CLAMP		1
-28	MS35489-11		.GROMMET		1
-29	755-6-2-8	*	.CLIP - (V00502)		1
	MS35207-262		.SCREW		1
	AN960D10		.WASHER		1
	MS21042L3		.NUT		1
-30	41A-65202-46		.TUBE - VENT LH (FS 277)		1
-31	41A-65202-47		.TUBE - VENT RH (FS 277)		1
-32	41A-65202-40		.TUBE ASSY - VENT (LH) (FS 277)		1
-33	41A-65202-31		.HOSE		2
-34	AN737TW26		.CLAMP		4
-35	316-6-6		.CLIP - (V00502) (2 ON PORT 1 ON STBD)		2
-36	MS35207-267		.SCREW		1
-37	NAS43DD3-32		.SPACER		1
	AN960D10		.WASHER		1
	MS21042L3		.NUT		1
		*	IAW C-12-114-000/CD-031		
-38	MS35489-11		.GROMMET		1
-39	41A-65212		.BLOCK - FUEL REAR CELL LH (CEMENTED TO STRUCTURE AT BOTTOM REAR)		1
	41A-65212-1		.BLOCK - FUEL REAR CELL RH (CEMENTED TO STRUCTURE AT BOTTOM REAR)		1
	41A-65202-60		.TAPE - (1 IN. WIDE)		AR
	41A-65202-62		.TAPE - (2 IN. WIDE)		AR

FIGURE AND INDEX NUMBER	GROUP FUEL SYSTEM MAJOR ASSEMBLY REAR FUEL CELL PART NUMBER	1 2 3 4 5 6 7 NOMENCLATURE	EFFEC-TIVITY	UNITS PER ASSY
2-6-4	NW4528142-1	JUMPER INSTL - BONDING (MODIFYING 41A-65202 & 41A-65202-1) (SEE SECTION 12)		REF
-40	M83413/8-A08BB	.JUMPER ASSY - (PORT & STBD)		6
-41	M83413/8-A06BB	.JUMPER ASSY - (PORT & STBD)		2
-42	MS35207-263	.SCREW		16
	AN960JD10L	.WASHER		32
	AN960-10L	.WASHER		16
	MS35338-43	.WASHER-LOCK		16
	MS21042L3	.NUT		16
-43	41A-65201-4	HOSE - REAR VENT CONNECTOR (SEE FIG. 2-6-3)		REF
-44	41A-65227	CONNECTOR - FUEL CENTRE TO REAR CELL (SEE FIG. 2-6-3)		REF
-45	41A-65511	LINE ASSY - FUEL VENT (SEE FIG. 2-6-6)		REF
-46	FCC20458	PIN ASSY - (SEE SECTION 3)		REF
		-000-		

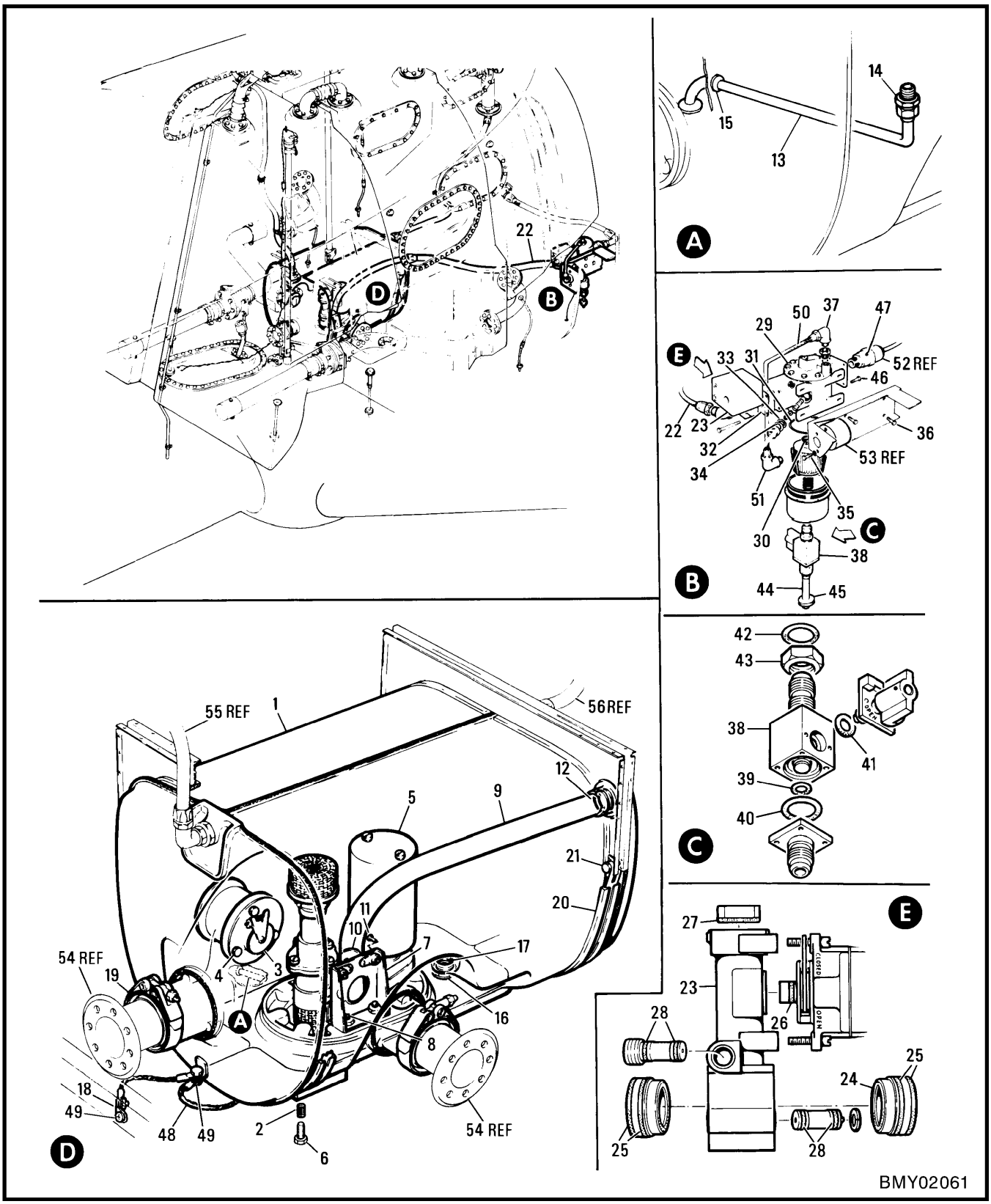

Figure 2-6-5 Fuel Collector Tank & Feed System

FIGURE AND INDEX NUMBER	GROUP FUEL SYSTEM MAJOR ASSEMBLY FUEL COLLECTOR TANK & FEED SYSTEM PART NUMBER		1 2 3 4 5 6 7 NOMENCLATURE	EFFEC-TIVITY	UNITS PER ASSY
2-6-5 -	41A-65600		TANK INSTL - FUEL SYS COLLECTOR (SEE FIG. 2-6-2)		NP
	41A-65600-2		.TANK ASSY - FUEL COLLECT		1
			OR		
- 1	41A-65601		..TANK ASSY - FUEL (WELDED)		1
	41A-65602		...SUMP ASSY - TANK COLLECTOR (WELDED)		1
- 2	3591-4CN X 3/8		....INSERT - (V91767)		12
- 3	14-562-1		..VALVE ASSY - (V92003) (FUEL SYS SWING CHECK) (IAW 41A-65050)		3
	SEAL		...BONDED RUBBER (SPEC STM-R 1000)		1
- 4	AN3C3A		..BOLT		9
- 5	RR12060R		..PUMP - (V31435) (FUEL BOOSTER) (IAW 41A-65053-2) (FOR BRKDN SEE C-13-975-000/MS-000)		1
- 6	MS20073-04-05		..BOLT		12
	2030-015		..RING - (V45681) (SEAL)		1
	AN960PD416L		..WASHER		11
	S1228-5		..TAB - (V88308)		1
- 7	41A-65617		..BRACKET ASSY - BOOSTER PUMP FEED LINE		1
- 8	AN507C1032R20		..SCREW		2
	AN960C10L		..WASHER		2
- 9	41A-65616		..LINE - BOOSTER PUMP FEED		1
	MS29513-118		..PACKING		2
-10	453-16-10		..CLIP - (V00502)		1
-11	AN520C10R10		..SCREW		2
	AN960C10L		..WASHER		2
-12	MS29513-120		..PACKING		2
-13	41A-65618-2		..LINE ASSY - (BOOST PUMP DRAIN)		1
-14	AN815-4D		..UNION		1
	MS29512-4		..GASKET		1
-15	MS35489-6S		..GROMMET		1
-16	230-20060		..VALVE - (V96313) (FUEL DRAIN)		1
-17	MS29513-9		...PACKING		1
	MS29512-10		..GASKET		1
-18	S1228-5		.TAB - (V88308)		1
-19	50175-200		.CLAMP - (V75829)		3
	MS29513-137		.PACKING		3
-20	2366-63-1078SH		.STRAP & T-BOLT ASSY - (V75829) (2366-63-1078SH WITH 2600-32 MAY BE PURCHASED AS 57989-10-1078SH (V69705))		2
	57989-10-1078SH		.STRAP, T-BOLT & CUSHION ASSY FOR 2366-63-1078SH TOG ETHER WITH 2600-32 (V75829)		
	2362-63-1078		.STRAP & TRUNNION ASSY - (V75829) (2362-63-1078 WITH 2600-32 MAY BE PURCHASED AS 57989-12-1078 (V69705))		2
	57989-12-1078		.STRAP, TRUNNION & CUSHION ASSY FOR 2362-63-1078 TOGETHER WITH 2600-32 (V75829)		
	2600-32		.CUSHION - (V00502) (GRADE A TYPE 2)		4
-21	NAS6204-10D		.BOLT		4
	AN960PD416L		.WASHER		8
	AN320-4		.NUT		4
	MS24665-134		.COTTER PIN		4
	41A-65400-50		FEED SYS INSTL - FUEL (SEE FIG. 2-6-2)		NP
-22	AE7010130M0220	*	.HOSE ASSY - (V69705)		1
-23	AV16B1692D		.VALVE ASSY - (V73760) (FUEL SHUT OFF) (IAW 41A-65054) (FOR BRKDN SEE C-13-D51-000/ MS-000)		1
-24	15510B		..RETAINER		2
-25	MS29513-215		..PACKING		4
-26	MS29513-11		..PACKING		1
-27	MS29513-121		..PACKING		1
-28	MS29513-9		..PACKING		4
		*	IAW C-12-114-000/CF-411		

FIGURE AND INDEX NUMBER	GROUP FUEL SYSTEM MAJOR ASSEMBLY FUEL COLLECTOR TANK & FEED SYSTEM PART NUMBER		1 2 3 4 5 6 7 NOMENCLATURE	EFFEC-TIVITY	UNITS PER ASSY
2-6-5 -29	700070		.STRAINER ASSY - (AXA) (FUEL SYS) (IAW 41A-65057) (FOR BRKDN SEE C-13-142-000/MY-000)		1
-30	MS29513-025		..PACKING		1
-31	MS29513-235		..PACKING		1
-32	70096		..HEAD ASSY - (AXA)		1
-33	MS29513UDN910		..PACKING		1
-34	MS29513UDN024		..PACKING		1
-35	AN3CH20A		.BOLT		4
	AN960PD10L		.WASHER		4
-36	NAS6204-4		.BOLT		4
	AN960PD416		.WASHER		4
	MS21042L4		.NUT		4
-37	AN833-4D		.ELBOW		1
	MS29512-4		.GASKET		1
	AN924-4D		.NUT		1
-38	475C62NXW		.VALVE ASSY - (AVI) (FUEL DRAIN) (IAW 41A-65067)		1
-39	MS29513-8		..PACKING		1
-40	MS29513-115		..PACKING		1
-41	MS29512-5		..PACKING		1
	MS29512-6		.GASKET		1
	AN924-6D		.NUT		1
-42	MS29512-6		.GASKET		1
-43	AN924-6D		.NUT		1
-44	41A-65400-30		.LINE - STRAINER DRAIN		1
	AN818-6D		.NUT		1
	MS20819-6		.SLEEVE		1
-45	MS35489-12		.GROMMET		1
-46	NAS623-3-2		.SCREW		4
	AN960PD10L		.WASHER		4
	MS21042L3		.NUT		4
-47	405-00217		.NIPPLE - (V96313) (FUEL INLET QUICK DISCONN) (IAW 41A-65055-4)		1
	NAS1544-123		.PACKING		1
	MS29512-16		.GASKET		1
	NW4528142-1		JUMPER INSTL - BONDING (MODIFYING 41A-65600-2) (SEE SECTION 12)		REF
-48	M83413/8-A08BB		.JUMPER ASSY		2
-49	MS35207-265		.SCREW		3
	AN960JD10L		.WASHER		6
	AN960-10L		.WASHER		3
	MS35338-43		.WASHER-LOCK		3
	MS21042L3		.NUT		3
	41A-42101		ELECTRICAL & ELECTRONIC EQUIP. INSTL - CENTRE FUSELAGE (SEE SECTION 12)		REF
-50	AE7010000E0120	*	.HOSE ASSY - (V69705) (FUEL STRAINER TO LOW PRESSURE SWITCH)		1
-51	AN833-4D		.ELBOW		1
	MS29512-4		.GASKET		1
	AN924-4D		.NUT		1
-52	405-00216		SOCKET - FUEL INLET QUICK DISCONNECT (SEE SECTION 5)		REF
-53	21SN41-105	***	SWITCH ASSY - FUEL PRESS. (SEE SECTION 12)		REF
-54	41A-65210		CONNECTOR - (SEE FIG. 2-6-2 & 2-6-3)		REF
-55	CA3193JJJ0376		HOSE ASSY - FUEL COLLECTOR TANK VENT FWD (SEE FIG. 2-6-6)		REF
-56	AE705363-1	**	HOSE ASSY - FUEL COLLECTOR TANK VENT REAR (SEE FIG. 2-6-6)		REF
			-000-		
		*	IAW C-12-114-000/CF-411		
		**	IAW C-12-114-000/CF-431		
		***	IAW C-12-114-000/CF-505		

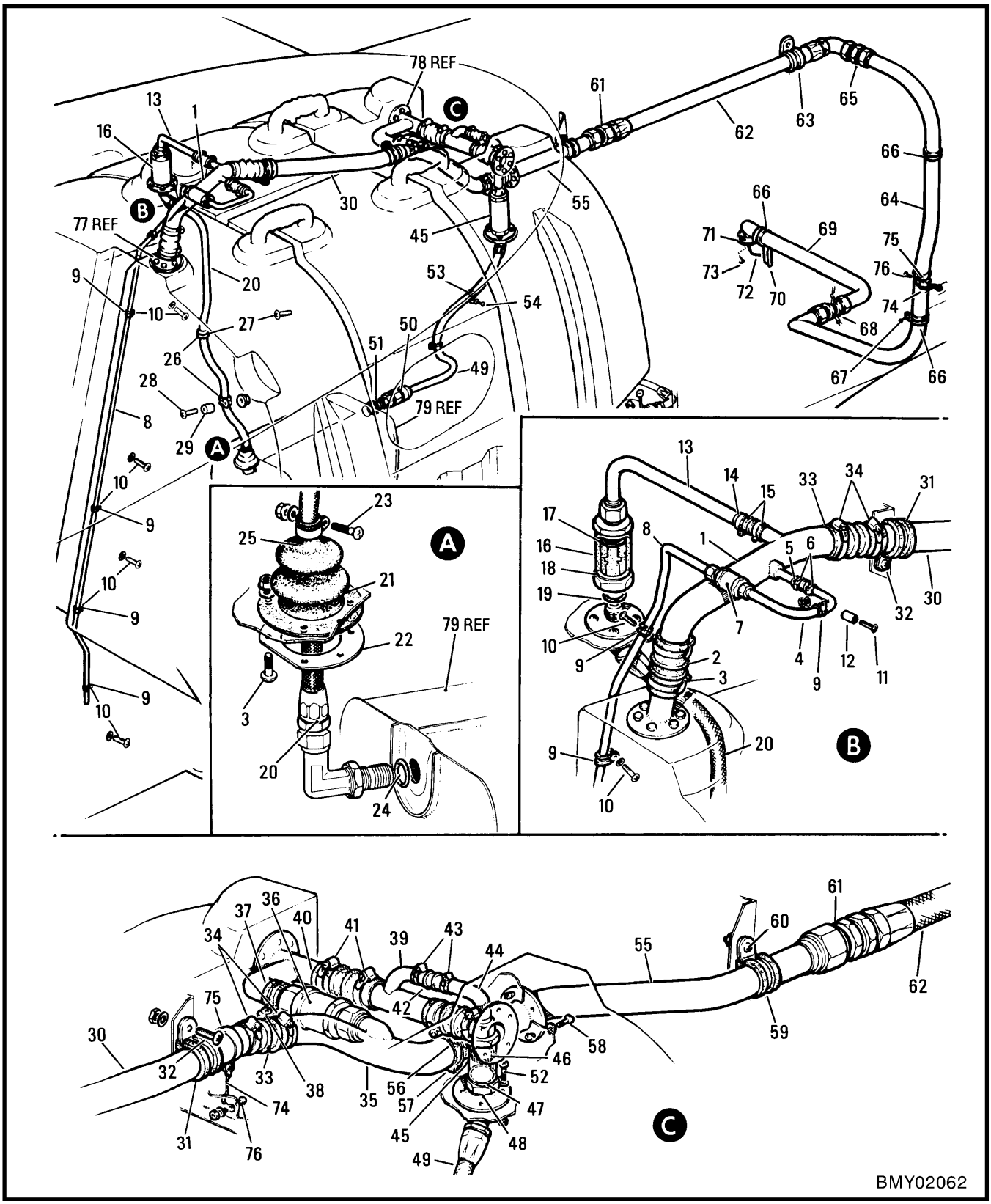

Figure 2-6-6 Fuel Vent System

FIGURE AND INDEX NUMBER	GROUP FUEL SYSTEM MAJOR ASSEMBLY FUEL VENT SYSTEM PART NUMBER		1 2 3 4 5 6 7 NOMENCLATURE	EFFEC-TIVITY	UNITS PER ASSY
2-6-6 -	41A-65501		VENT SYS INSTL - FORWARD FUSELAGE FUEL (SEE FIG. 2-6-2)		NP
- 1	41A-65512		.LINE ASSY - FUEL VENT		1
- 2	41A-65501-54		.HOSE - FUEL VENT		1
- 3	AN737TW58		.CLAMP		2
- 4	41A-65514-6		.LINE ASSY - FUEL VENT		1
- 5	41A-65501-24		.HOSE - FUEL VENT		1
- 6	AN737TW22		.CLAMP		2
- 7	MS28885-4		.VALVE ASSY		1
- 8	41A-65514-8		.LINE ASSY - FUEL VENT		1
- 9	316E4-6		.CLIP - (V00502)		7
-10	MS35206-246		.SCREW		6
	AN960PD8L		.WASHER		6
-11	MS35206-247		.SCREW		1
-12	NAS43DD3-32		.SPACER		1
	AN960PD8L		.WASHER		1
	MS21042L08		.NUT		1
-13	41A-65514-4		.LINE ASSY - FUEL VENT		1
-14	41A-65501-52		.HOSE - FUEL VENT		1
-15	AN737TW34		.CLAMP		2
	2630269		.VALVE ASSY - (V92003) (COLLECTOR TANK VENT) (IAW 41A-65056-800) (FOR SPARES ORDER 2630363)	001-010	1
-16	2630363		.VALVE ASSY - (V92003) (COLLECTOR TANK VENT) (IAW 41A-65056-801) (ALSO SPARE FOR 2630269)	011-	1
-17	2633496		..RING - (V92003)		2
-18	F61A1718-9		..GASKET - (V92003)		1
-19	MS29512-10		.GASKET		1
-20	CA3193JJJ0376		.HOSE ASSY - (V69705) FUEL COLLECTOR TANK VENT FWD		1
	AN833-10D	*	.ELBOW		1
	AN924-10D	*	.NUT		1
	MS29512-10	*	.GASKET		1
-21	41A-65064-6		.BELLOWS - (V61463) (COLLECTOR TANK VENT FWD)		1
-22	41A-65501-56		.RETAINER - BELLOWS		1
-23	MS35207-264		.SCREW		8
	AN960PD10L		.WASHER		8
	MS21042L3		.NUT		8
-24	MS29512-10		.GASKET		1
-25	AN735D16		.CLAMP		1
-26	755-13-2-8		.CLIP - (V00502)		2
-27	MS35207-264		.SCREW		1
	AN960PD10L		.WASHER		1
-28	MS35207-266		.SCREW		1
-29	NAS43DD3-24		.SPACER		1
	MS21042L3		.NUT		1
-30	41A-65514-2		.LINE ASSY - FUEL VENT		1
-31	316-20-8		.CLIP - (V00502)		2
-32	MS35207-264		.SCREW		2
	AN960PD10L		.WASHER		2
	MS21043-3		.NUT		2
		*	IAW C-12-114-000/CF-352		
-33	41A-65501-54		.HOSE - FUEL VENT		2
-34	AN737TW58		.CLAMP		4
-35	41A-65513		.LINE ASSY - FUEL VENT		1
-36	MS28885-20		.VALVE ASSY		1
-37	316-20-8		.CLIP - (V00502)		1
-38	MS35207-264		.SCREW		1
	AN960PD10L		.WASHER		1
	MS21043-3		.NUT		1
-39	41A-65511		.LINE ASSY - FUEL VENT		1
-40	41A-65501-26		.HOSE - FUEL VENT		2
-41	AN737TW46		.CLAMP		4

FIGURE AND INDEX NUMBER	GROUP FUEL SYSTEM MAJOR ASSEMBLY FUEL VENT SYSTEM PART NUMBER	1 2 3 4 5 6 7 NOMENCLATURE	EFFEC-TIVITY	UNITS PER ASSY
2-6-6 -42	41A-65501-52	.HOSE - FUEL VENT		1
-43	AN737TW34	.CLAMP		2
-44	41A-65514-10	.LINE ASSY - FUEL VENT		1
	2630269	.VALVE ASSY - (V92003) (COLLECTOR TANK VENT) (IAW 41A-65056-800) (FOR SPARES ORDER 2630363)	001-010	1
-45	2630363	.VALVE ASSY - (V92003) (COLLECTOR TANK VENT) (IAW 41A-65056-801) (ALSO SPARE FOR 2630269)	011-	1
-46	2633496	..RING - (V92003)		2
-47	F61A1718-9	..GASKET - (V92003)		1
-48	MS29512-10	.GASKET		1
-49	AE705363-1	.HOSE ASSY - FUEL COLLECTOR TANK VENT REAR (IAW C-12-114-000/CF-431)		1
-50	AN815-10D	.REDUCER		2
-51	MS29512-10	.GASKET		1
-52	MS35207-264	.SCREW		4
	AN960PD10L	.WASHER		4
	MS21042L3	.NUT		4
-53	316-13-8	.CLIP - (V00502)		2
-54	MS35207-264	.SCREW		2
	AN960PD10L	.WASHER		2
-55	41A-65515	.LINE ASSY - FUEL VENT		1
-56	41A-65501-54	.HOSE - FUEL VENT		1
-57	AN737TW58	.CLAMP		2
-58	MS35207-264	.SCREW		4
	AN960PD10L	.WASHER		4
-59	755SS20-2-8SF	.CLIP - (V00502)		1
-60	MS35207-264	.SCREW		1
	AN960PD10L	.WASHER		1
	MS21043-3	.NUT		1
-61	AN815-20D	.UNION		1
	41A-65000-4	VENT SYS INSTL - REAR FUSELAGE FUEL(SEE SECTION 3)		NP
	41A-65502	.VENT SYS INSTL - REAR FUSELAGE FUEL (IAW C-12-114-000/CF-374 & NW4528142-1)		NP
-62	AE7010200N0240	..HOSE ASSY - (V69705) (IAW C-12-114-000/CF-411)		1
-63	755SS23-2-8SF	..CLIP - (V00502)		1
-64	41A-65502-22	..TUBE ASSY - (WELDED)		1
-65	AN815-20D	..UNION		1
-66	755SS20-2-8SF	..CLIP - (V00502)		3
-67	MS35207-264	..SCREW		4
	AN960PD10L	..WASHER		4
	MS21042L3	..NUT		4
-68	AN832-20D	..UNION - BULKHEAD		1
	AN924-20D	..NUT		1
-69	41A-65516-4 *	..MAST ASSY - UPPER		1
-70	41A-65516-28	..BRACKET ASSY		1
R -71	41A-65516-12	..GASKET (V48482)		1
R	41A-65516-32	..GASKET (V48482)		1
-72	41A-65516-2 *	..MAST ASSY - LOWER (WELDED)		1
-73	NAS6203-4 *	..SCREW		8
	NW4528142-1	JUMPER INSTL - BONDING (MODIFYING 41A-65502) (SEE SECTION 12)		REF
-74	M83413/8-A06BB	.JUMPER ASSY		2
-75	AN735DC20	.CLAMP		2
-76	MS35207-265	.SCREW		4
	AN960JD10L	.WASHER		4
	AN960-10L	.WASHER		4
	MS35338-43	.WASHER-LOCK		2
	MS21042L3	.NUT		4
-77	41A-65235	CONNECTOR - FUEL CELL VENT (SEE FIG. 2-6-2)		REF
-78	41A-65222	CONNECTOR ASSY - FUEL CELL (SEE FIG. 2-6-4)		REF
-79	41A-65601	TANK ASSY - FUEL (WELDED) (SEE FIG. 2-6-5)		REF
		-000-		
	*	IAW C-12-114-000/CF-419 AND C-12-114-000/CF-518		

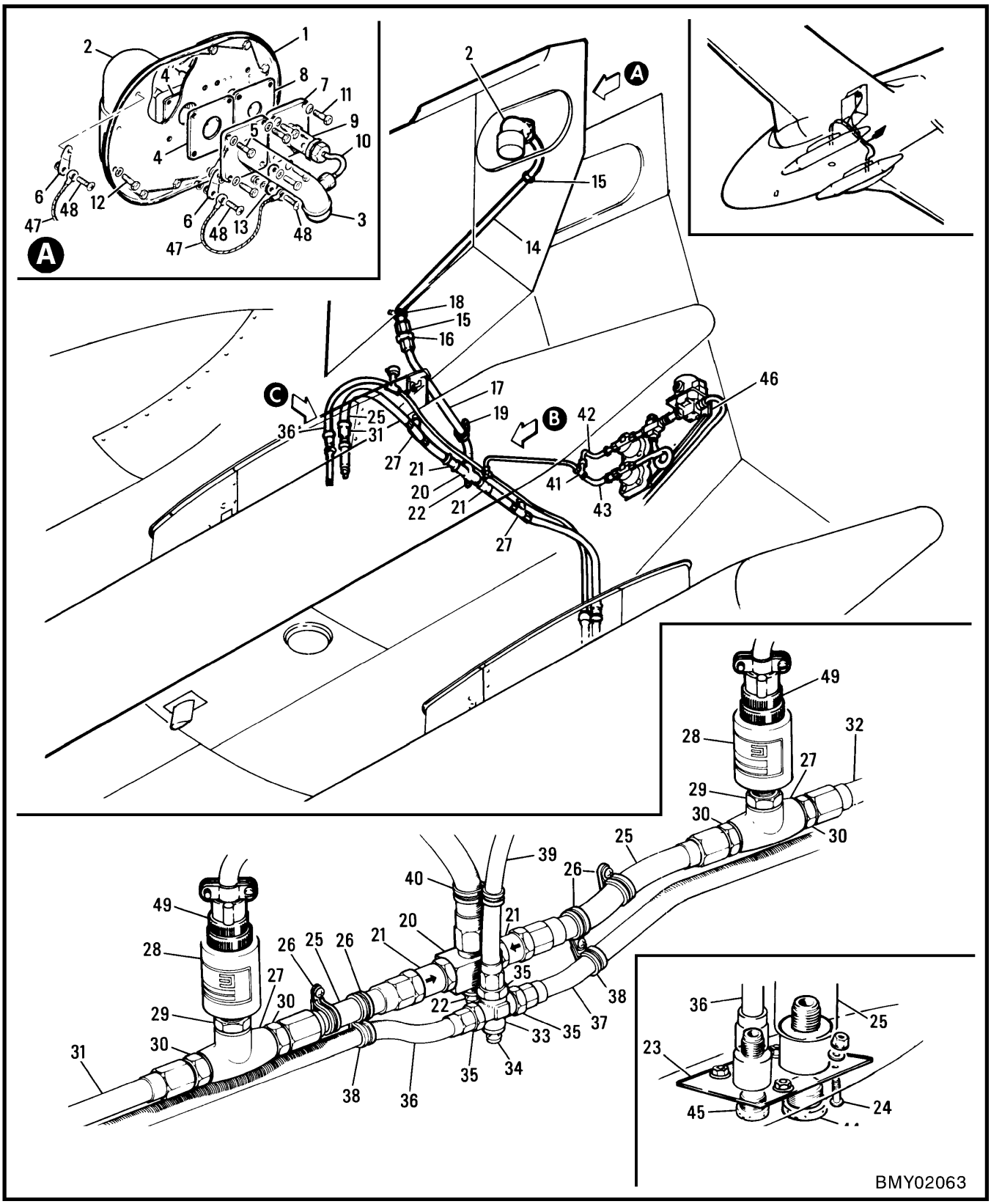

Figure 2-6-7 Fuselage Auxiliary Fuel System

FIGURE AND INDEX NUMBER	GROUP FUEL SYSTEM MAJOR ASSEMBLY FUSELAGE AUXILIARY FUEL SYSTEM PART NUMBER		1 2 3 4 5 6 7 NOMENCLATURE	EFFEC-TIVITY	UNITS PER ASSY
2-6-7 -	K41A-60018	*	KIT - FUEL SYSTEM INSTL AUX TANKS		NP
	K41A-60018-18		.FUEL CONTROL AND DOOR ASSY		1
- 1	41A-65211-800		..DOOR ASSY - FUEL CELL ACCESS		1
- 2	2660333M2		..VALVE ASSY - (V45681) FUEL LEVEL CONTROL (IAW 41G-60006-4)		1
- 3	K41A-60018-125		..ELBOW ASSY (WELDED)		1
- 4	41G-65010		..GASKET		2
- 5	NAS1103-6		..BOLT		4
	AN960D10		..WASHER		3
- 6	S1228A		..TAB		1
- 7	41G-65009		..FLANGE		1
- 8	41G-65010		..GASKET		1
	MS29512-04		..PACKING		1
- 9	4P10-12		..VALVE - (V82829) THERMAL RELIEF		1
-10	41A-65209-28		..LINE ASSY - ELBOW TO RELIEF VALVE		1
	NAS1598-3Y		..SEALING WASHER		1
-11	NAS1103-6		..BOLT		4
-12	MS20073-04-04		.BOLT		12
	AN960D416		.WASHER		11
-13	S1228-8		.TAB - (V88308)		1
-14	41A-65209-12		.LINE ASSY - FUEL (VALVE TO MANIFOLD)		1
-15	3605-16D		.FLEX COUPLING - (V79326)		1
	MS29513-214		.PACKING		1
-16	AN815-16D		.UNION		1
-17	41A-65209-10		.LINE ASSY - FUEL (VALVE TO MANIFOLD)		1
-18	MS21919WDG16		.CLAMP		1
	MS27039-1-10		.SCREW		1
	AN960D10		.WASHER		1
	MS21042L3		.NUT		1
-19	MS21919WDG16		.CLAMP		1
	MS21919WDG12		.CLAMP		1
	NAS43DD4-10		.SPACER		1
	MS35207-268		.SCREW		1
	MS21042L3		.NUT		1
-20	41A-65208		.MANIFOLD		1
	MS29512-12		.PACKING		1
-21	869A12TT		.VALVE - (V91816) CHECK		2
-22	1100B52Z4		.VALVE - (V91511) MANIFOLD DRAIN		1
	MS29512-05		.PACKING		1
-23	41G-65011		.FITTING ASSY - AUX TANK CONN - LH		1
	41G-65011-1		.FITTING ASSY - AUX TANK CONN - RH		1
-24	NAS623-3-3		.SCREW		8
	AN960PD10L		.WASHER		8
	MS21042L3		.NUT		8
-25	41A-65209-8		.LINE ASSY - MANIFOLD TO PRESS SWITCH (LH)		1
	41A-65209-6		.LINE ASSY - MANIFOLD TO PRESS SWITCH (RH)		1
-26	MS21919WDG12		.CLAMP		2
	MS27039-1-10		.SCREW		2
	AN960D10		.WASHER		2
	MS21042L3		.NUT		2
-27	AN938-12D		.TEE		2
		*	IAW C-12-114-000/CD-031		
-28	1G349-3	*	.SWITCH - (V09049) PRESSURE		2
-29	AN919-16D		.REDUCER		2
	MS29512-12		.PACKING		2
	MS29512-04	*	.PACKING		2
-30	AN815-12D		.UNION		4
	MS29512-12		.PACKING		4
-31	41A-65209-4		.LINE ASSY - PRESS SWITCH TO TANK CONN (LH)		1
-32	41A-65209-2		.LINE ASSY - PRESS SWITCH TO TANK CONN (RH)		1
-33	AN937-6D		.CROSS		1
-34	1100B52Z4		.VALVE - (V91511) CROSS DRAIN		1
	MS29512-05		.PACKING		1

FIGURE AND INDEX NUMBER	GROUP FUEL SYSTEM MAJOR ASSEMBLY FUSELAGE AUXILIARY FUEL SYSTEM PART NUMBER	1 2 3 4 5 6 7 NOMENCLATURE	EFFEC-TIVITY	UNITS PER ASSY
2-6-7 -35	AN815-6D	.UNION		3
	MS29512-05	.PACKING		3
-36	41A-65209-26	.LINE ASSY - CROSS TO TANK AIR CONN (LH)		1
-37	41A-65209-24	.LINE ASSY - CROSS TO TANK AIR CONN (RH)		1
-38	MS21919WDG12	.CLAMP		2
	MS21919WDG6	.CLAMP		2
	MS27039-1-10	.SCREW		2
	MS21042L3	.NUT		2
-39	41A65209-22	.LINE ASSY - CROSS TO TEE FITTING (AIR)		1
-40	MS21919WDG16	.CLAMP		1
	MS21919WDG6	.CLAMP		1
	MS27039-1-10	.SCREW		1
	MS21042L3	.NUT		1
-41	AN824-6D	.TEE		1
-42	41A-65209-18	.LINE ASSY - TEE FITTING TO PRESS REGULATOR		1
-43	41A-65209-20	.LINE ASSY - TEE FITTING TO PRESS REGULATOR		1
-44	41G-65016	.PLUG - AUX TANK FITTING CONNECTOR (FUEL)		1
-45	41G-65017	.PLUG - AUX TANK FITTING CONNECTOR (AIR)		1
-46	K41A-60018-2	.PANEL ASSY - VALVES (SEE FIGURE 2-6-8)		REF
	NW4528142-1	JUMPER INSTL - BONDING (MODIFYING K41A-60018 & K41A-60018-18)		REF
-47	M83413/8-A08AA	.JUMPER ASSY		2
-48	MS35207-263	.SCREW		4
	AN960JD10L	.WASHER		8
	AN960-10L	.WASHER		4
	MS35338-43	.WASHER-LOCK		4
	MS21042L3	.NUT		4
	NW4528324-1	WIRING INSTL - FUSELAGE/NOSE (SEE SECTION 12)		REF
-49	MS3456L14S-2S	.CONNECTOR - (P2EF & P3EF) (SEE SECTION 12)		REF
		-000-		
	*	IAW C-12-114-000/CF-450		

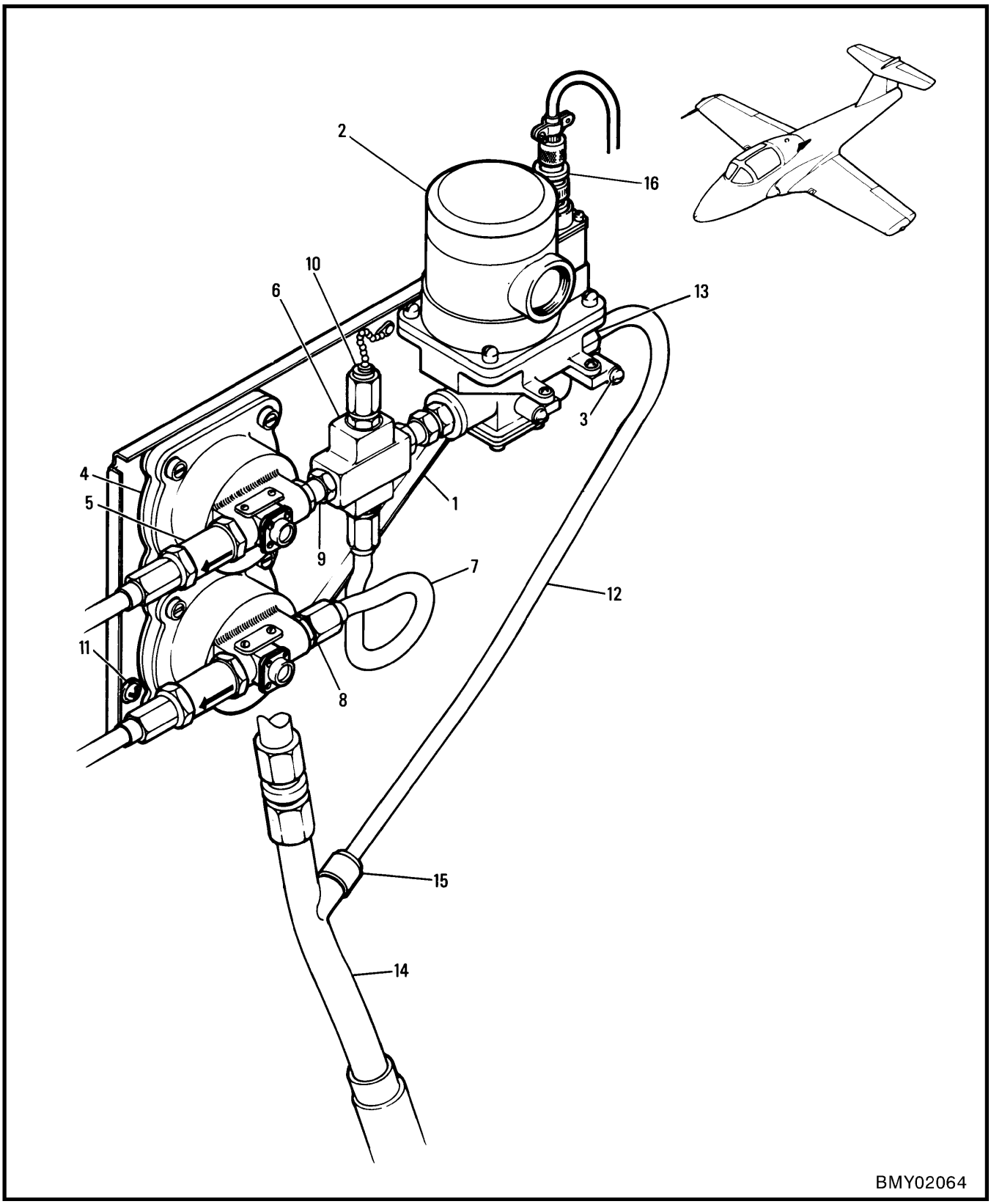

Figure 2-6-8 Aux Fuel Air Pressure Regulator Panel

FIGURE AND INDEX NUMBER	GROUP FUEL SYSTEM MAJOR ASSEMBLY AUX FUEL AIR PRESSURE REGULATOR PANEL PART NUMBER		1 2 3 4 5 6 7 NOMENCLATURE	EFFEC-TIVITY	UNITS PER ASSY
2-6-8 -	K41A-60018	*	KIT - FUEL SYSTEM INSTL AUX TANKS (SEE FIG. 2-6-7)		REF
	K41A-60018-2		.PANEL ASSY		1
- 1	K41A-60018-4		..PANEL		1
- 2	AV16E1274		..VALVE - (V11065) AIR SHUT-OFF ELECTRIC (IAW 41G-60007-6)		1
- 3	AN502-416-10		..SCREW		2
	NAS43DD4-10		..SPACER		2
	AN960D416		..WASHER		2
- 4	392904-1		..REGULATOR (V70210) AIR PRESSURE (IAW 41G-60008)		2
	AN960D8L		..WASHER		8
	MS21042L08		..NUT		8
- 5	859A6TT		..VALVE - (V91816) CHECK AIR REGULATOR		2
	MS29512-05		..PACKING		2
- 6	AN937D6		..CROSS		1
- 7	41A-65209-14		..LINE ASSY - CROSS TO PRESS REGULATOR		1
- 8	AN815-6D		..UNION		3
	MS29512-05		..PACKING		3
- 9	AN832-6D		..UNION		2
	MS29512-05		..PACKING		2
	AN924-6D		..NUT		2
-10	AN929A6		..CAP		1
	NAS1201B6A6A		..CHAIN		1
-11	MS27039-1-07		.SCREW		4
	AN960D10		.WASHER		4
-12	41A-65209-16		.LINE ASSY - SHUT-OFF VALVE TO WATER SEP		1
-13	AN815-6D		.UNION		1
	MS29512-05		.PACKING		1
	K41A-60018-16		.TUBE ASSY - (WELDED)		1
-14	41A-95218-16		..TUBE ASSY - WATER SEP (MODIFIED) (SEE SECTION 9)		REF
-15	AN815-16D		.UNION		1
-16	MS3456L10SL-3S		CONNECTOR - AIR SHUT-OFF VALVE (P1EF) (SEE SECTION 12)		REF
			-000-		
		*	IAW C-12-114-000/CD-031		

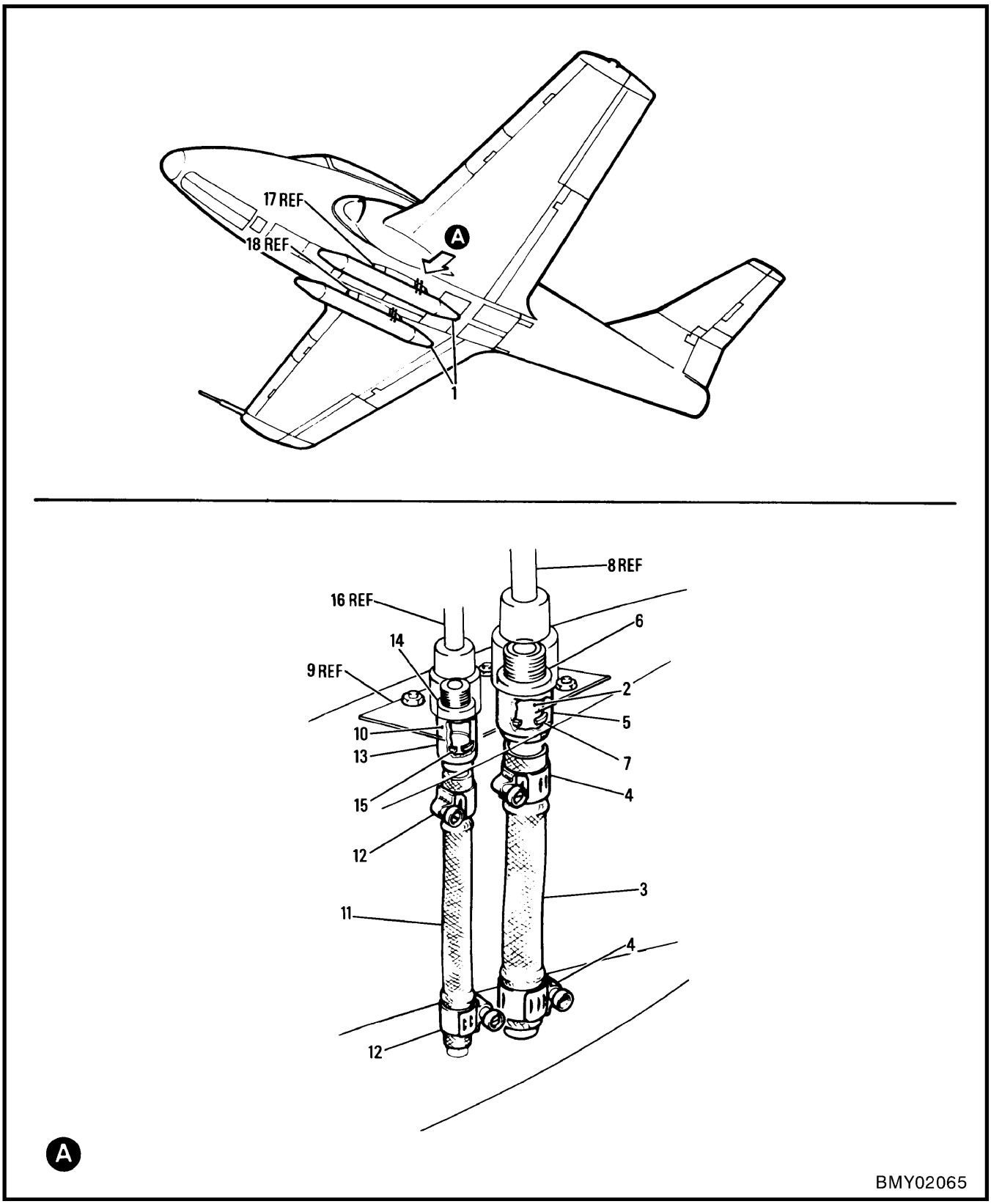

Figure 2-6-9 Auxiliary Fuel Tanks & Disconnects

FIGURE AND INDEX NUMBER	GROUP FUEL SYSTEM MAJOR ASSEMBLY AUXILIARY FUEL TANKS & DISCONNECTS PART NUMBER		1 2 3 4 5 6 7 NOMENCLATURE	EFFEC-TIVITY	UNITS PER ASSY
2-6-9 -	K41A-60016	*	KIT - FUS AUX FUEL SYSTEM INSTL		NP
- 1	118J000-(B)		.TANK ASSY - (V62793) EXTERNAL FUEL (IAW 416-60012-802)		2
	K41A-60018		.KIT - FUEL SYSTEM INSTL AUX TANKS (SEE FIG. 2-6-7)		REF
	K41A-60018-110		..DISCONNECT ASSY - FUS FUEL LINE		NP
- 2	41G-65022		...NIPPLE		1
- 3	K41A-60018-118		...HOSE - FUEL		1
- 4	QS200M12S		...CLAMP - (V08484)		2
- 5	41G-65024		..ADAPTER - FUEL HOSE		1
- 6	MS29512-10		..PACKING		1
- 7	MS29513-210		..PACKING		1
- 8	41A-65209-4		..LINE ASSY (LH) (SEE FIG. 2-6-7)		REF
- 9	41G-65011		..FITTING ASSY (SEE FIG. 2-6-7)		REF
	K41A-60018-112		..DISCONNECT ASSY - FUS AIR LINE		NP
-10	41G-65023		...NIPPLE		1
-11	K41A-60018-122		...HOSE - AIR		1
-12	QS200M8S		...CLAMP - (V08484)		2
-13	41G-65025		..ADAPTER - AIR HOSE		1
-14	MS29512-06		..PACKING		1
-15	NAS1593-111		..PACKING		1
-16	41A-65209-26		..LINE ASSY - AIR LH (SEE FIG. 2-6-7)		REF
-17	41G-27200-810		.PYLON ASSY - LH (I) (SEE FIG. 2-6-10)		REF
-18	41G-27200-811		.PYLON ASSY - RH (I) (SEE FIG. 2-6-10)		REF
			-000-		
		*	IAW C-12-114-000/CD-031		

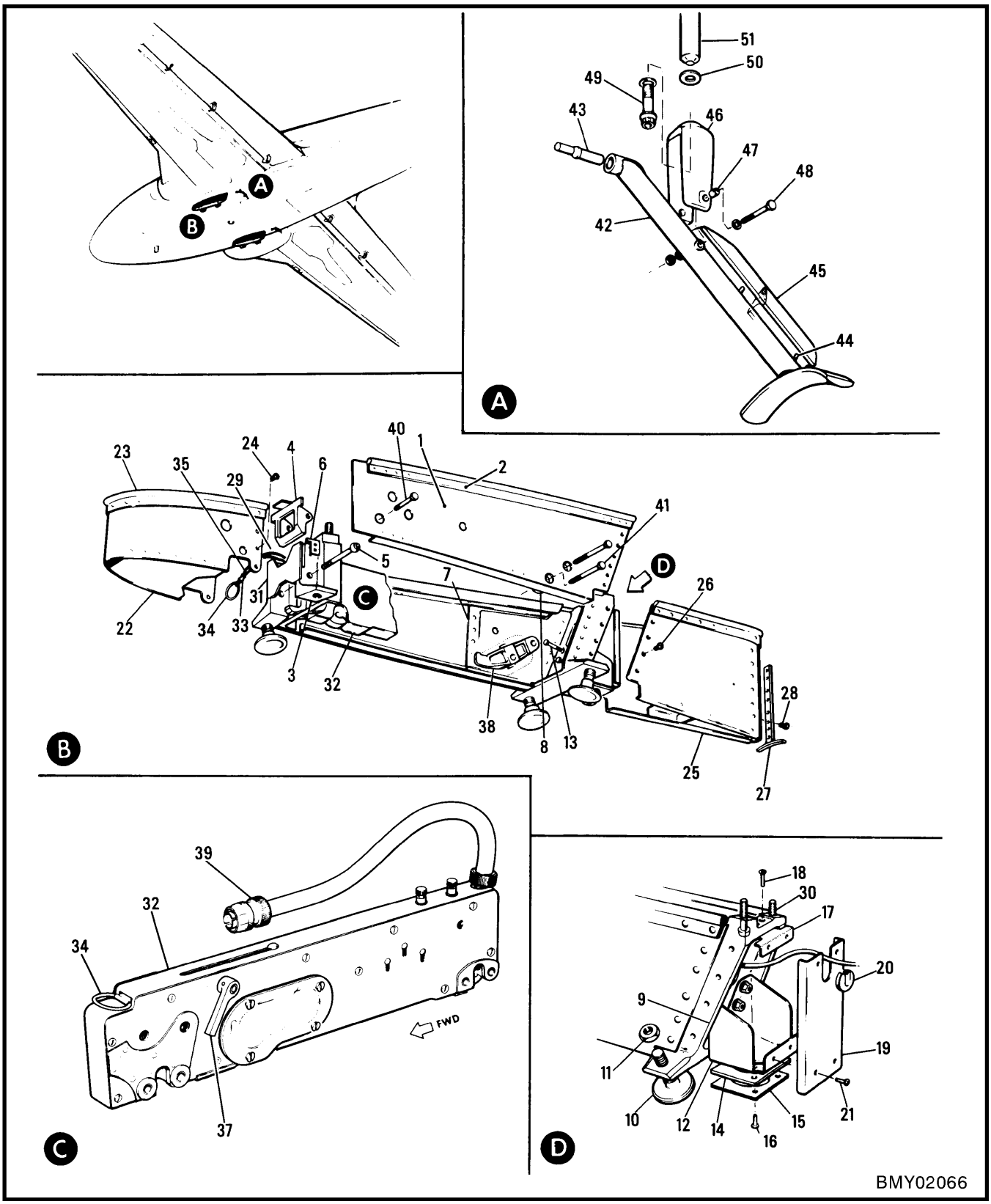

Figure 2-6-10 Fuselage Pylons – Aux Fuel or Smoke Tanks

FIGURE AND INDEX NUMBER	GROUP FUEL SYSTEM MAJOR ASSEMBLY FUSELAGE PYLONS – AUX FUEL OR SMOKE TANKS PART NUMBER		1 2 3 4 5 6 7 NOMENCLATURE	EFFEC-TIVITY	UNITS PER ASSY
2-6-10 -	41G-27200-810	*	PYLON ASSY & INSTL - FUSELAGE LH (I)		NP
	41G-27200-811	*	PYLON ASSY & INSTL - FUSELAGE RH (I)		NP
- 1	41G-27212-3		.SKIN - CENTRE (PORT PYLON LH)		1
	41G-27212-4		.SKIN - CENTRE (PORT PYLON RH)		1
	41G-27212-5		.SKIN - CENTRE (STBD PYLON LH)		1
	41G-27212-3		.SKIN - CENTRE (STBD PYLON RH)		1
- 2	41G-27200-62		.SEAL - CENTRE (PORT PYLON LH) (REFER TO PART 4 PAGE 23)		1
	41G-27200-2		.SEAL - CENTRE (PORT PYLON RH) (REFER TO PART 4 PAGE 23)		1
	41G-27200-3		.SEAL - CENTRE (STBD PYLON LH) (REFER TO PART 4 PAGE 23)		1
	41G-27200-63		.SEAL - CENTRE (STBD PYLON RH) (REFER TO PART 4 PAGE 23)		1
- 3	41G-27210		.FITTING - PORT PYLON FWD		1
	41G-27210-1		.FITTING - STBD PYLON FWD		1
- 4	41G-27207		.RESTRAINER ASSY		1
- 5	MS20005-54		.BOLT		1
	MS20002-4		.WASHER		1
- 6	41G-27206-2		.STOP - RESTRAINER (RIVETED)		2
- 7	41G-27222		.FITTING - PORT PYLON INNER		1
	41G-27222-1		.FITTING - STBD PYLON INNER		1
- 8	41G-27221		.FITTING - PORT PYLON OUTER		1
	41G-27221-1		.FITTING - STBD PYLON OUTER		1
- 9	41G-27220		.FITTING ASSY - PORT PYLON AFT		1
	41G-27220-1		.FITTING ASSY - STBD PYLON AFT		1
-10	41G-27307-4		.SCREW ASSY - SWAY BRACE ADJUSTING		4
-11	AN364-720		.NUT - ADJUSTING		4
-12	41G-27223-4		.BRACKET ASSY - RECEPTACLE SUPPORT		1
-13	AN3-4		.BOLT		4
	MS21042L3		.NUT		4
-14	41G-27223-10		.PLATE		1
-15	41G-27223-12		.PLATE		1
-16	MS35207-263		.SCREW		3
-17	41G-27223-2		.BRACKET ASSY		1
-18	MS24693-29		.SCREW		2
	MS21042L06		.NUT		2
-19	41G-27223-16		.COVER ASSY		1
-20	MS35489-11		.GROMMET		1
-21	MS35207-263		.SCREW		4
-22	41G-27201-4		.FAIRING ASSY - PORT PYLON FWD		1
	41G-27201-5		.FAIRING ASSY - STBD PYLON FWD		1
-23	41G-27201-12		..SEAL - (REFER TO PART 4 PAGE 23)		1
-24	NAS623-3-8		.SCREW		6
-25	41G-27202		.FAIRING ASSY - PORT PYLON AFT		1
	41G-27202-1		.FAIRING ASSY - STBD PYLON AFT		1
-26	NAS623-3-4		.SCREW		8
-27	41G-27407		.CRUTCH		1
-28	NAS623-3-6		.SCREW		2
-29	MS20005-18		.BOLT - FWD FITTING ATTACH (INBD)		1
	MS20005-26		.BOLT - FWD FITTING ATTACH (OUTBD)		1
	MS20002C-5		.WASHER		2
-30	MS20005-18		.BOLT - AFT FITTING ATTACH (INBD)		1
	MS20005-24		.BOLT - AFT FITTING ATTACH (OUTBD)		1
	MS20002-5		.WASHER		2
-31	41A-26000-2		.MARKER		1
	41A-26000-4		.MARKER		1
	41G-27305-810		.RACK ASSY - BOMB		1
-32	41G-27305-24		..RACK - (V27096)		1
-33	41A-27305-3		..CABLE		1
-34	41A-27305-5		..RING		1
		*	IAW C-12-114-000/CD-031		

FIGURE AND INDEX NUMBER	GROUP FUEL SYSTEM MAJOR ASSEMBLY FUSELAGE PYLONS – AUX FUEL OR SMOKE TANKS PART NUMBER	1 2 3 4 5 6 7 NOMENCLATURE	EFFEC-TIVITY	UNITS PER ASSY
2-6-10 -35	28-1C	..SLEEVE - (V76691)		2
-36	41G-27334-10	..SHAFT		1
	41G-27335	..SPRING		1
	S1246T20-14-15	..WASHER - (V88308)		2
-37	41G-27332	..LEVER		1
	NAS1407P7M8	..PIN		1
-38	41G-27211	..HOOK - (SUPPLIED LOOSE)		1
-39	MS3106R18-1P	..CONNECTOR		1
-40	NAS1105-30	.BOLT - RACK ATTACH (FWD)		1
-41	NAS1105-49	.BOLT - RACK ATTACH (AFT)		2
	MS21042L5	.NUT		3
	41G-27225-800	CRUTCH ASSY & INSTL - FUS AUX TANK (I)		1
-42	41G-27226	.CRUTCH ASSY		1
-43	41G-27228	.PIN		1
-44	MS24692-173P	.PIN		2
-45	41G-27330-2	.FAIRING		1
-46	41G-27227	.FORK		1
-47	NAS77-4-18	.BUSHING		2
-48	AN4-21A	.BOLT		1
	MS21042L4	.NUT		1
-49	MS21250-08018	.BOLT		1
	MS20002C8	.WASHER (UNDER HEAD)		1
	AN960-816	.WASHER (UNDER HEAD)		AR
-50	S1246-32-32-63	.WASHER - (V88308)		AR
-51	41G-35043	FITTING - CRUTCH & JACKING (LH) (SEE SECTION 3)		REF
		-000-		

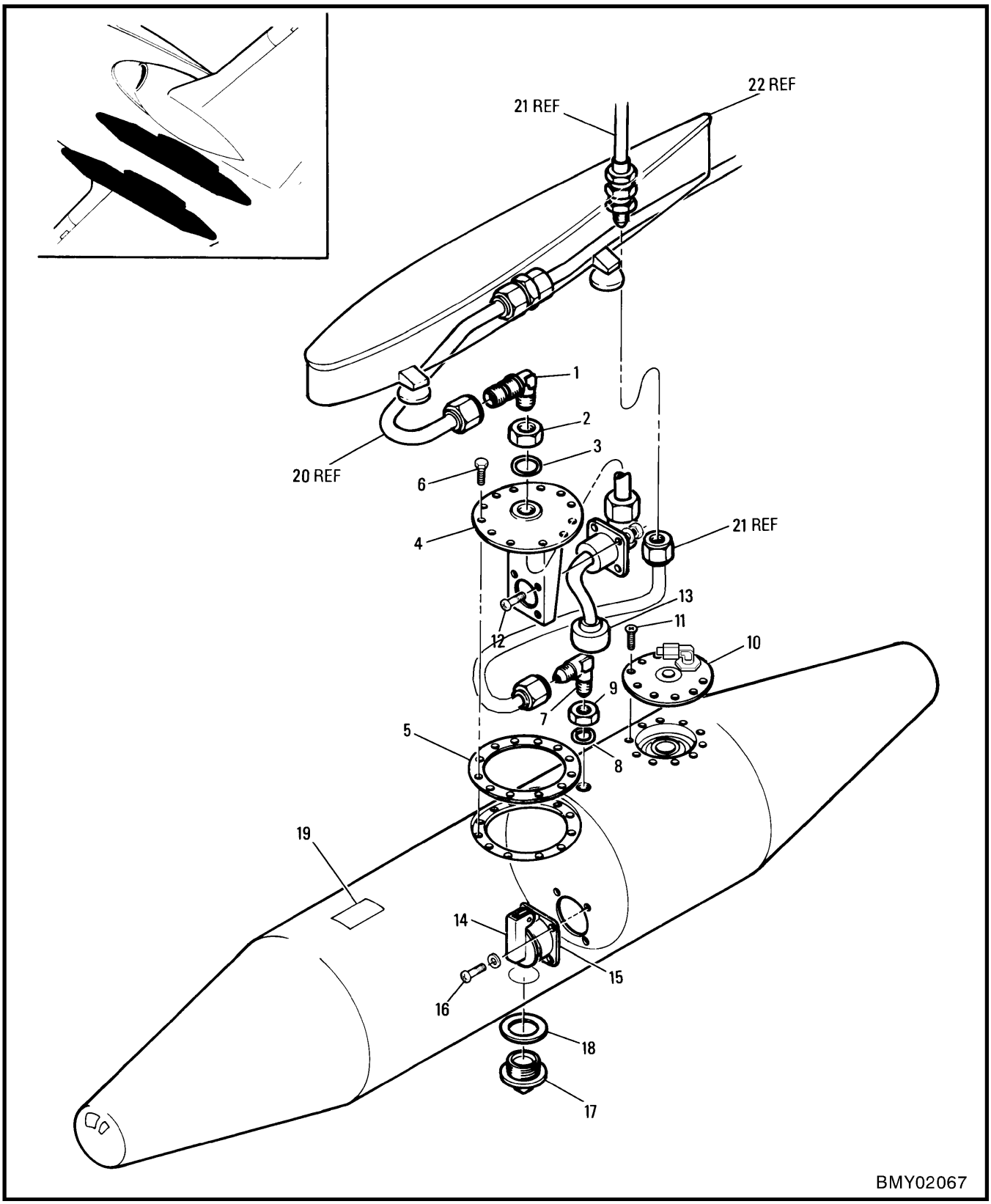

Figure 2-6-11 Smoke System Tank (For Snowbird Aircraft Only)

FIGURE AND INDEX NUMBER	GROUP FUEL SYSTEM MAJOR ASSEMBLY SMOKE SYSTEM TANK PART NUMBER	1 2 3 4 5 6 7	NOMENCLATURE	EFFEC-TIVITY	UNITS PER ASSY
2-6-11 -	NW4514200-1		SMOKE SYST GENL ASSY (SEE SECTIONS 1 & 12)	A	REF
	114023SB-1		.TANK ASSY - SMOKE (LH)		1
	114023SB-2		.TANK ASSY - SMOKE (RH)		1
- 1	AN833-8D		..ELBOW		1
- 2	NW4605023		..NUT		1
- 3	MS28778-8		..SEAL		1
- 4	C66C50195-1		..PANEL ASSY		1
- 5	NW4605002		..GASKET		1
- 6	NAS517-3-3		..SCREW		12
- 7	AN833-4D		..ELBOW		1
- 8	MS28778-4		..SEAL		1
- 9	AN924-4D		..NUT		1
-10	457-370	*	..CAP - FILLER (LH AND RH) (V99321)		1
-11	MS24694-53		..SCREW		10
-12	MS35207-263		..SCREW		4
	AN960-10		..WASHER		4
	NAS679A3		..NUT		4
-13	C66C50199-1		..ADAPTOR - SWIVEL		1
-14	C66B50193-1		..FLAPPER - VALVE		8
-15	C66C50192-1		..BODY - VALVE		8
-16	MS35207-263		..SCREW		4
	AN960-10		..WASHER		4
-17	AN909B24		..PLUG		1
-18	AN900-24		..GASKET		1
-19	114029SB-1		..DECAL (LH)		1
	114029SB-2		..DECAL (RH)		1
-20	NW4514067-1		.PIPING INSTL - SMOKE SYST (SEE FIG. 2-6-12)		REF
-21	NW4514068-1		.REGULATOR INSTL - PRESSURE (SEE FIG. 2-6-13)		REF
-22	41G-27200-810		.PYLON ASSY - SMOKE TANK (LH) (SEE FIG. 2-6-10)		REF
	41G-27200-811		.PYLON ASSY - SMOKE TANK (RH) (SEE FIG. 2-6-10)		REF
			-000-		
		A	SNOWBIRD AIRCRAFT ONLY		
		*	IAW C-12-114-000/CS-069		

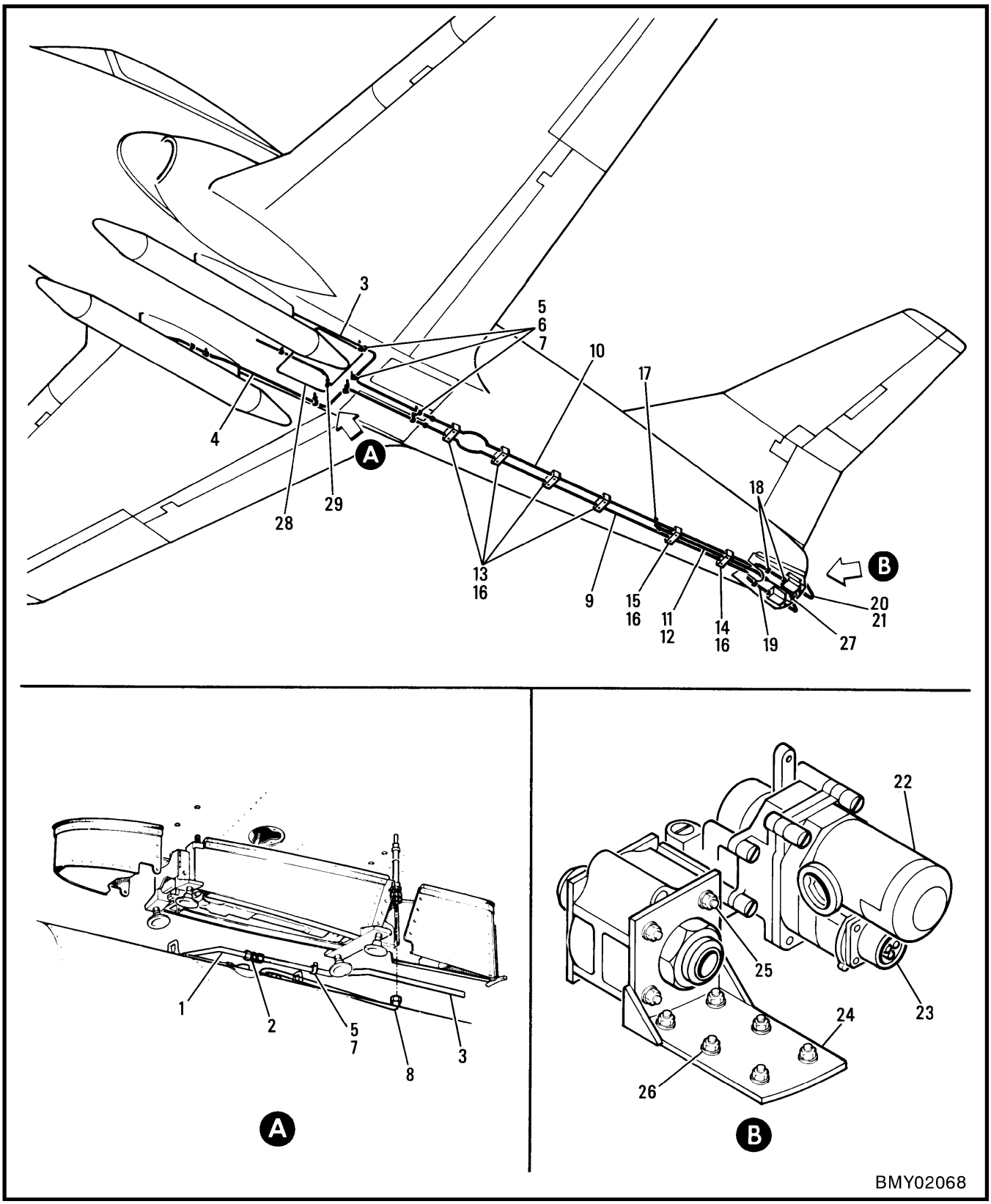

Figure 2-6-12 Smoke System Piping (For Snowbird Aircraft Only)

FIGURE AND INDEX NUMBER	GROUP FUEL SYSTEM MAJOR ASSEMBLY SMOKE SYSTEM PIPING PART NUMBER	1 2 3 4 5 6 7	NOMENCLATURE	EFFEC-TIVITY	UNITS PER ASSY
2-6-12 -	NW4514067-1		PIPING INSTL - SMOKE SYSTEM (SEE FIG. 2-6-11)	A	NP
- 1	NW4514059-3		.PIPE - (LH)		1
	NW4514059-4		.PIPE - (RH)		1
- 2	AN815-8D		.UNION		4
- 3	NW4514059-5		.PIPE - (LH)		1
- 4	NW4514059-6		.PIPE - (RH)		1
- 5	MS21919WDG-8		.CLAMP		9
- 6	LS607-24		.SPACER - (V36659)		6
	LS607-32		.SPACER - (V36659)		2
- 7	MS35207-269		.SCREW		8
	AN960D10L		.WASHER		12
	MS27130A25K		.NUT		4
- 8	AE701-4	*	.HOSE ASSY - (V69705)		1
- 9	NW4514059-7		.PIPE		1
-10	NW4514059-9		.PIPE		1
-11	NW4514064-1		.PIPE		1
-12	MS20819-8J		..SLEEVE		1
	AN818-8D		..NUT		1
-13	NW4514043-1		.SUPPORT		4
-14	NW4514044-1		.SUPPORT		1
-15	NW4514045-1		.SUPPORT		1
-16	MS35207-269		.SCREW		12
	AN960D10L		.WASHER		12
-17	AN833-8D		.ELBOW		1
	AN960PD1216		.WASHER		1
	AN924-8D		.NUT		2
-18	AN815-8D		.UNION		4
-19	MS28741-8-0084		.HOSE		2
-20	NW4514046-1		.NOZZLE (MADE FROM AN806-S8)		2
-21	NW4514059-8		.PIPE		2
	NW4514054-1		.VALVE ASSY - GATE (LH)		1
	NW4514040-1		.VALVE ASSY - GATE (RH)		1
-22	AV16B1692DSB		..VALVE - GATE - (V73760)		1
-23	NW4514047-1		..ADAPTOR ASSY		1
	NW4514048-1		...PLATE		1
	MS24392-8		...NIPPLE		1
-24	NW4514053-1		..ANGLE ASSY - (LH)		1
	NW4514041-1		..ANGLE ASSY - (RH)		1
-25	NAS6203-28		..BOLT		4
	AN960C10		..WASHER		4
	MS21042L3		..NUT		4
-26	NAS6203-6		.BOLT		12
	AN960C10		.WASHER		12
	MS21042-3		.NUT		12
-27	MS35207-264		.SCREW		1
	AN960D10L		.WASHER		2
	MS25082-3		.NUT		1
	MS21042-3		.NUT		1
-28	NW4514058-1		.PANEL - ACCESS (MADE FROM 41A-35096-40)		REF
-29	AN929-4D		.CAP		1
	AN832-4D		.UNION		1
	AN924-4D		.NUT		1
			-000-		
		A	SNOWBIRD ARCFT ONLY		
		*	IAW C-12-114-000/CF-491		

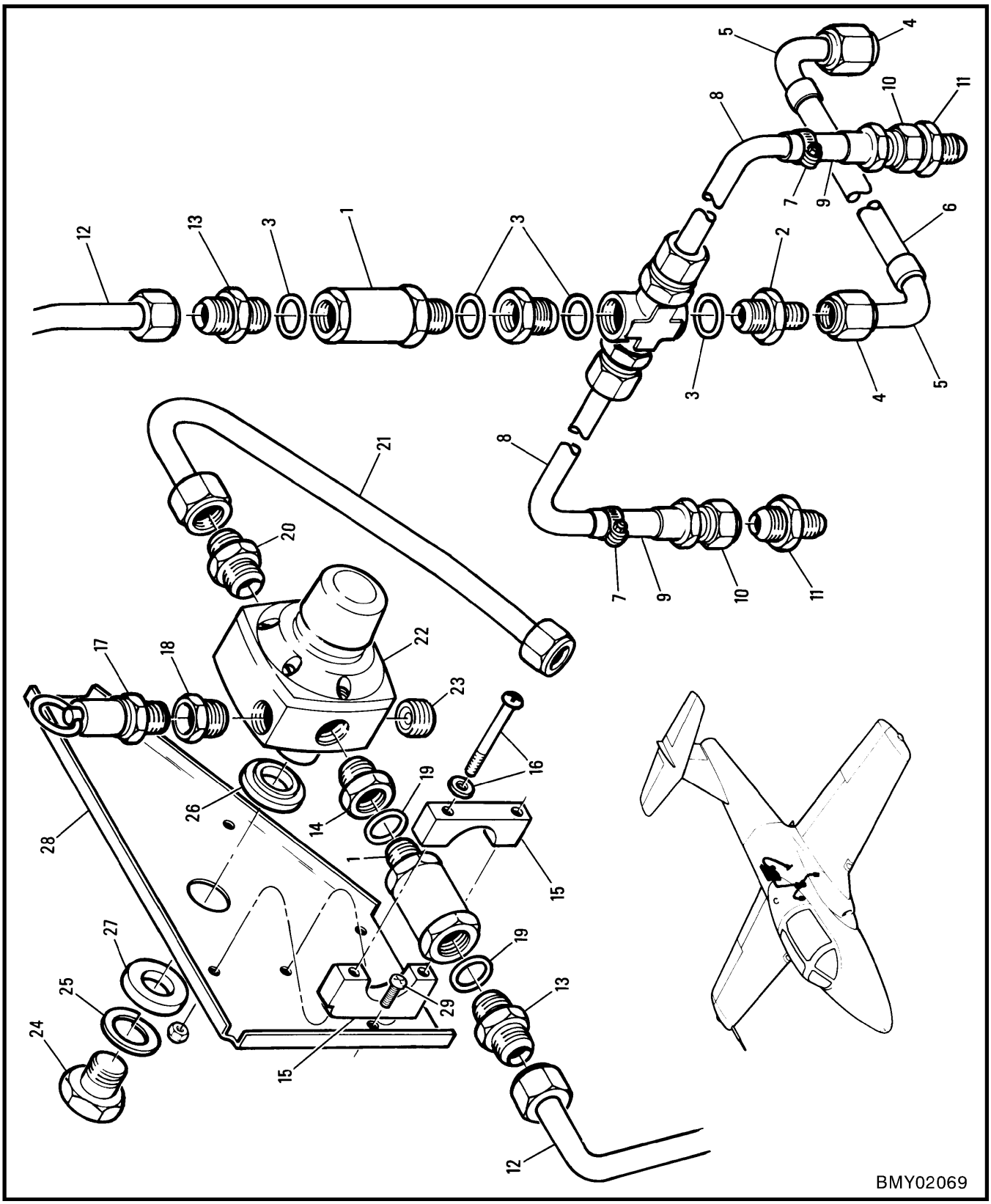

Figure 2-6-13 Smoke System Pressure Regulator (For Snowbird Arcft Only)

FIGURE AND INDEX NUMBER	GROUP FUEL SYSTEM MAJOR ASSEMBLY SMOKE SYSTEM PRESSURE REGULATOR PART NUMBER	1 2 3 4 5 6 7 NOMENCLATURE	EFFEC-TIVITY	UNITS PER ASSY
2-6-13 -	NW4514068-1	REGULATOR INSTL - PRESSURE (SEE FIG. 2-6-11)	A	NP
- 1	311826-1	.VALVE - (V81982)		2
- 2	MS24399D7	.UNION		1
- 3	MS29512-05	.PACKING		4
	NW4514089-1	.HOSE ASSY		1
- 4	MS24590-4	..NUT		2
- 5	985367-4D	..ADAPTOR - (V61564)		2
- 6	NW4514077-1	.HOSE ASSY		2
- 7	QS200-M8S	..CLAMP - (V08484)		1
- 8	41G-65023	..NIPPLE		1
- 9	AN6270-6-0160	..HOSE ASSY - LOW PRESSURE		1
-10	MS27404-6D	..FITTING		1
-11	AN919-7D	..REDUCER		1
-12	NW4514059-2	.PIPE ASSY		1
-13	AN815-6D	.UNION		2
-14	AN816-6D	.UNION		1
-15	NW4514060-1	.SUPPORT		1
-16	MS35207-272	.SCREW		2
	AN960D10	.WASHER		2
	MS21042-L10	.NUT		2
-17	103351	.VALVE - (V35972)		1
-18	AN912-2	.UNION		1
-19	MS29512-05	.PACKING		1
-20	AN816-6-6D	.UNION		1
-21	NW4514059-1	.PIPE ASSY		1
-22	HAA-522A	.REGULATOR - AIR PRESSURE (V08419) (P/N NW3000-N03 ALT SUPPLY AVAILABLE LOCAL PURCHASE)		1
-23	MS27769D4	.PLUG		1
-24	NW4514061-1	.FITTING - BLANKING		1
-25	NW4514062-1	.WASHER		1
-26	NW4514055-1	.SPACER		1
-27	NW4514056-1	.SPACER		1
-28	NW4514057-1	.BRACKET - MOUNTING		1
-29	MS27039-1-07	.SCREW		4
	AN960D10	.WASHER		4
		-000-		
	A	SNOWBIRD ARCFT ONLY		

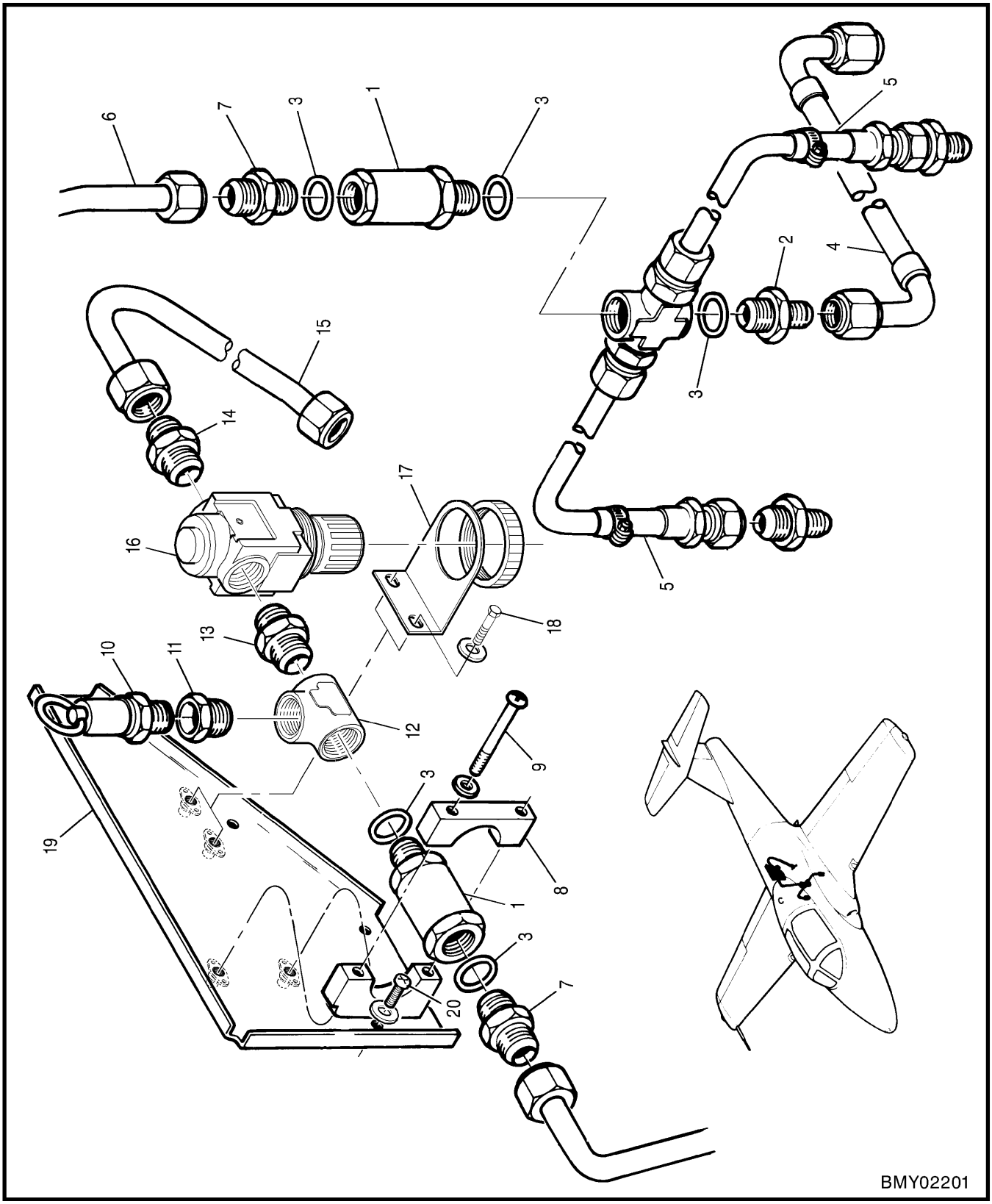

Figure 2-6-14 Smoke System Pressure Regulator (For Snowbird Arcft Only, Post 114-003-00)

FIGURE AND INDEX NUMBER	GROUP FUEL SYSTEM MAJOR ASSEMBLY SMOKE SYSTEM PRESSURE REGULATOR PART NUMBER	1 2 3 4 5 6 7 NOMENCLATURE	EFFEC-TIVITY	UNITS PER ASSY
2-6-14 -	CAE9528402	PRESSURE REGULATOR - SMOKE SYSTEM	A	NP
- 1	311826-1	.VALVE - CHECK		2
- 2	MS24399D7	.UNION		1
- 3	MS29512-05	.O-RING		5
- 4	NW4514089-1	.HOSE ASSY		1
- 5	NW4514077-1	.HOSE ASSY		2
R - 6	114016SB-2	.PIPE ASSY, OR		1
R	NW4514059-2	.PIPE ASSY		1
- 7	AN815-6D	.UNION		2
- 8	CAE9528404-1	.SUPPORT - CHECK VALVE		1
- 9	MS35207-274	.SCREW		2
	NAS1149D0332J	.WASHER		2
-10	103351	.VALVE - SAFETY RELIEF		1
-11	AN912-2D	.BUSHING - PIPE		1
-12	AN917-3D	.TEE - PIPE		1
-13	AN911-3D	.PIPE NIPPLE		1
-14	AN816-6-6D	.UNION		1
-15	CAE9528405-1	.PIPE		1
-16	NAR3000-N03	.AIR REGULATOR (VTBD)		1
-17	CAE9528406-1	.BRACKET - PRESSURE REGULATOR		1
-18	MS35207-279	.SCREW		2
	NAS1149D0432J	.WASHER		2
-19	CAE9528403-1	.PRESSURE REGULATOR BRACKET (SEE DWG CAE9528403)		1
-20	MS27039-1-07	.SCREW		4
	NAS1149D0332J	.WASHER		4
		-000-		
	A	SNOWBIRD AIRCRAFT ONLY		

SECTION 7

FLIGHT CONTROLS

TABLE OF CONTENTS

Figure	Title	Page
2-7-1	Flight Controls	2-7-2
2-7-2	Forward Fuselage Bellcrank & Levers	2-7-4
2-7-3	Forward Fuselage Conrol Rods.	2-7-8
2-7-4	Cockpit Rudder & Brake Controls	2-7-12
2-7-5	Cockpit Rudder & Brake Controls	2-7-16
2-7-6	Control Column	2-7-20
2-7-7	Cockpit Flight Contol Levers.	2-7-24
2-7-8	Aileron Controls.	2-7-26
2-7-9	Aileron Tab Controls	2-7-30
2-7-10	Power & Flap Controls	2-7-34
2-7-11	Power & Flap Control Box.	2-7-38
2-7-12	Centre Console Power & Flap Levers	2-7-42
2-7-13	Flap Follow Up System Mechanism	2-7-44
2-7-14	Flap Interconnect	2-7-48
2-7-15	Aft Fuselage Bellcrank & Levers	2-7-50
2-7-16	Aft Fuselage Control Rods	2-7-54
2-7-17	Elevator Control Rods & Torque Tube	2-7-58
2-7-18	Elevator Trim & Geared Tab Controls	2-7-62
2-7-19	Cross Cockpit Throttle Quadrant Mod (For Snowbird Aircraft Only)	2-7-64

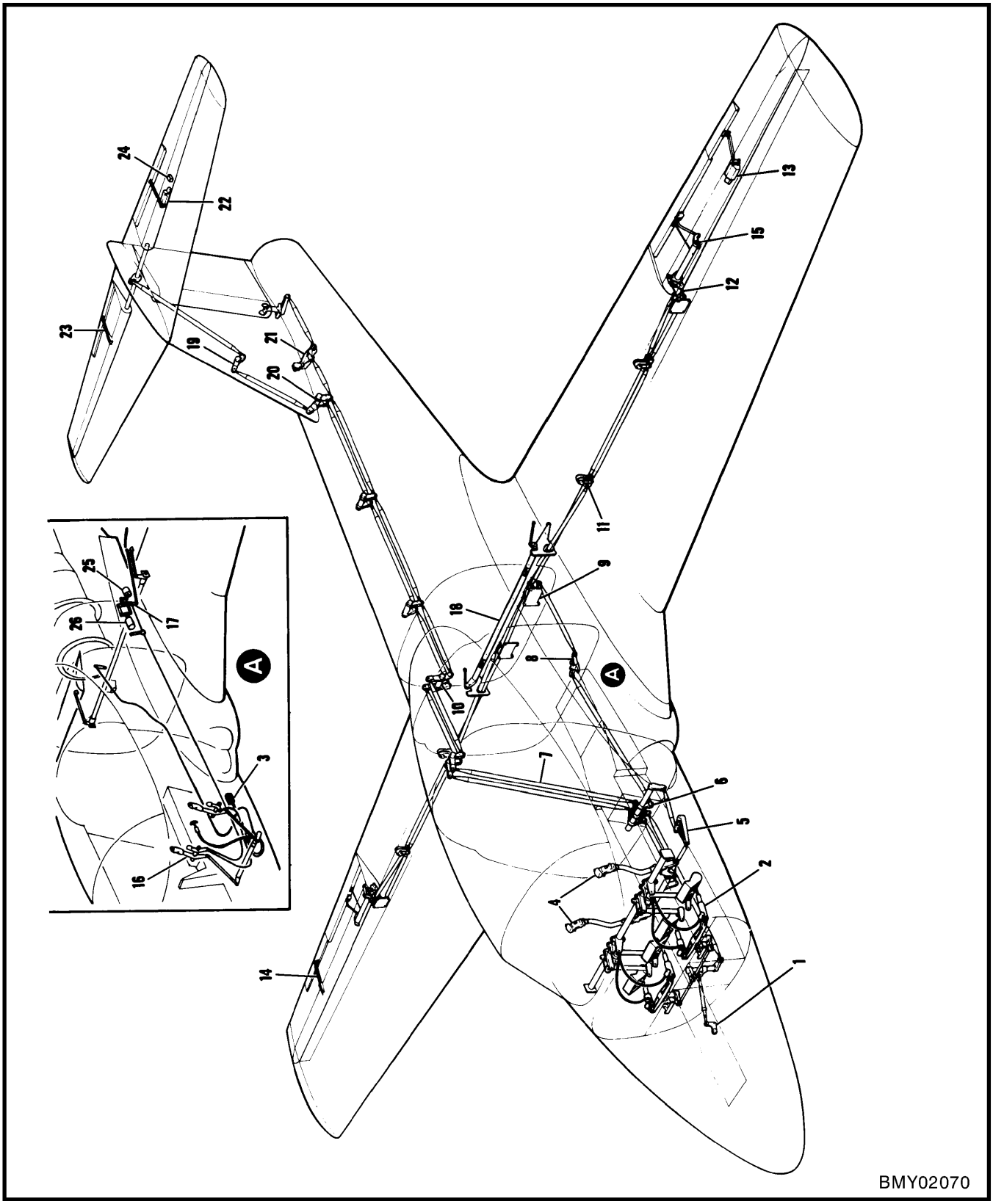

Figure 2-7-1 Flight Controls

FIGURE AND INDEX NUMBER	GROUP FLIGHT CONTROLS MAJOR ASSEMBLY FLIGHT CONTROLS PART NUMBER	1 2 3 4 5 6 7 NOMENCLATURE	EFFEC-TIVITY	UNITS PER ASSY
2-7-1 - 1	41A-90372-2	LEVER - NOSE WHEEL STEERING (SEE SECTION 4)		REF
- 2	R819-2	SCREW JACK ASSY - RUDDER PEDAL ADJUSTING (SEE FIG. 2-7-5)		REF
- 3	40253	VALVE CONTROL ASSY - LDG/GR EMERGENCY (SEE SECTION 8)		REF
R - 4	G56679 *	GRIP ASSY - TYPE B8A (SEE FIG. 2-7-6), OR		REF
R	G56679SB **	GRIP ASSY - TYPE B8A (SEE FIG. 2-7-6)		REF
- 5	41A-90403	LEVER ASSY - AILERON CONTROL (SEE FIG. 2-7-2)		REF
- 6	41A-90404	LEVER - FS 208 AILERON CONTROL (SEE FIG. 2-7-7)		REF
- 7	41A-90099-8	ROD ASSY - FS 208-231 RUDDER CONTROL (SEE FIG. 2-7-3)		REF
- 8	41A-90425	LEVER ASSY - FS 260 AILERON CONTROL (SEE FIG. 2-7-2)		REF
- 9	41A-90415	BRACKET - FS 285 AILERON CONTROL (LH) (SEE FIG. 2-7-2)		REF
-10	41A-90407	SHAFT - FLIGHT CONTROLS (SEE FIG. 2-7-2)		REF
-11	41A-90652	LEVER ASSY - WS 60 AILERON CONTROL (SEE FIG. 2-7-8)		REF
-12	41A-90662	ROD ASSY - AILERON CONTROL (SEE FIG. 2-7-8)		REF
-13	R422M22-1	ACTUATOR ASSY - AILERON TRIM TAB (SEE FIG. 2-7-9)		REF
-14	41A-90602	ROD ASSY - AILERON GEAR TAB (SEE FIG. 2-7-9)		REF
-15	40252-2	PUSH PULL UNIT - FLAP CONTROL (SEE FIG. 2-7-10)		REF
-16	KY925	GRIP ASSY -(THROTTLE CTL) (SEE FIG. 2-7-11 & 2-7-12)		REF
-17	41A-90857-8	LEVER - FLAP FOLLOW UP (SEE FIG. 2-7-13)		REF
-18	41A-90865	TORQUE TUBE ASSY - FLAP INTERCONNECT (SEE FIG. 2-7-14)		REF
-19	41A-90552-2	LEVER ASSY - FIN ELEVATOR CONTROL (SEE FIG. 2-7-15)		REF
-20	41A-90460	LEVER ASSY - FS 387 (SEE FIG. 2-7-15)		REF
-21	41A-90466	LEVER ASSY - FS 407 RUDDER (SEE FIG. 2-7-15)		REF
-22	R422M25-1	ACTUATOR ASSY - ELEVATOR TRIM (SEE FIG. 2-7-18)		REF
-23	41A-90607	ROD ASSY - ELEVATOR GEARE D TAB (SEE FIG. 2-7-18)		REF
-24	41A-42113	RELAY INSTL - AILERON TRIM TAB CONTROL (SEE SECTION 12)		REF
-25	MIL-T-5583A	TRANSMITTER - FOLLOW UP (SEE SECTION 14)		REF
-26	3293000-1	VALVE ASSY - FLAP SELECTOR (SEE SECTION 8)		REF
		-000-		
R	*	APPLICABILITY NON-SNOWBIRD AIRCRAFT		
R	**	FOR SNOWBIRD AIRCRAFT (RED DOT BELOW MUTE SWITCH INDICATES GRIP ASSY - P/N G56679 IAW C-12-114-000/CF-525)		

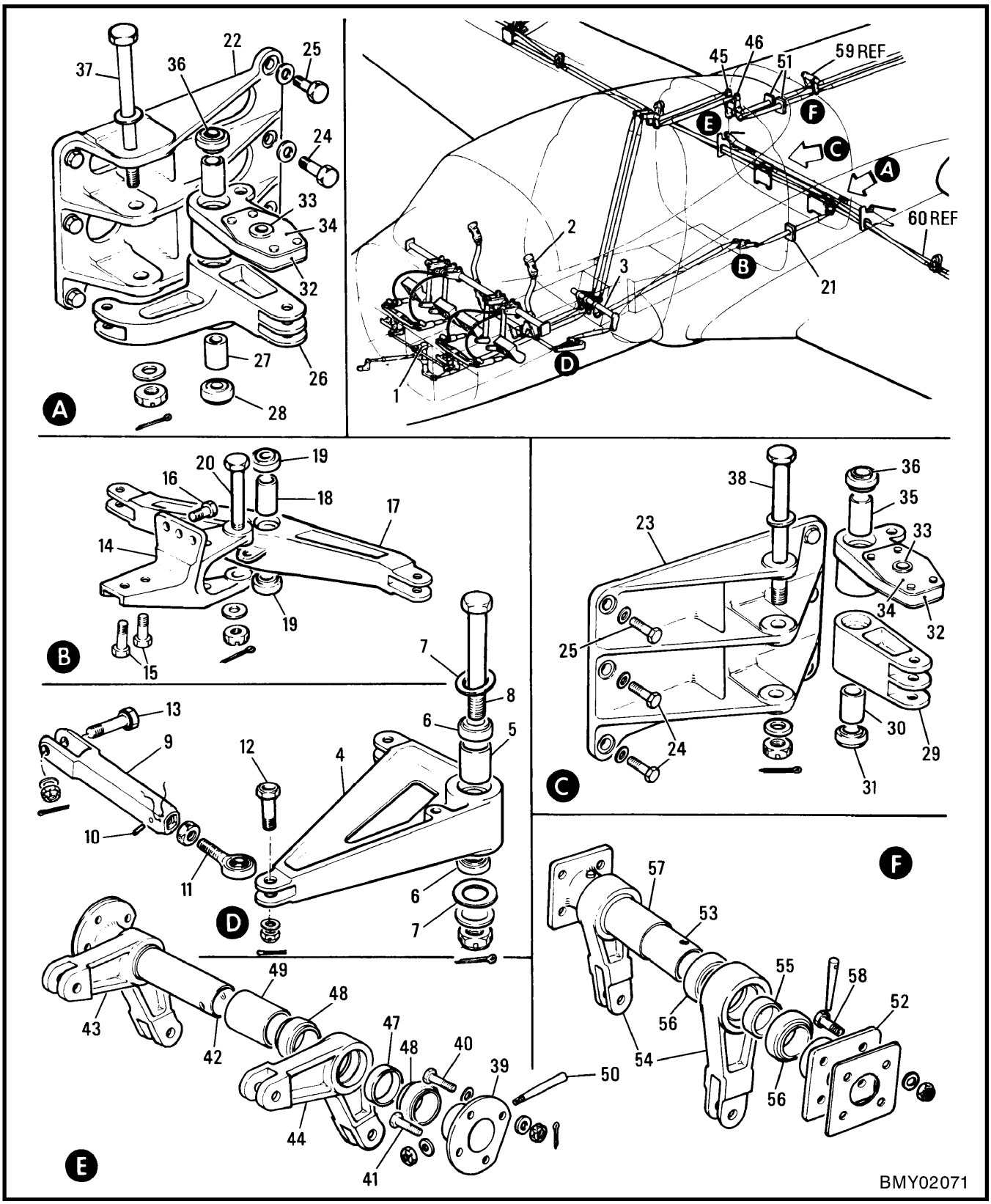

Figure 2-7-2 Forward Fuselage Bellcrank & Levers

FIGURE AND INDEX NUMBER	GROUP FLIGHT CONTROLS MAJOR ASSEMBLY FORWARD FUSELAGE BELLCRANK & LEVERS PART NUMBER	1 2 3 4 5 6 7 NOMENCLATURE	EFFEC-TIVITY	UNITS PER ASSY
2-7-2 -	41A-90004	FLIGHT CONTROLS INSTL - FORWARD FUSELAGE (SEE SECTION 3)		NP
- 1	41A-90201	.RUDDER & BRAKE CONTROLS INSTL - COCKPIT (SEE FIG. 2-7-4)		REF
- 2	41A-90151	.CONTROL COLUMN ASSY - (SEE FIG. 2-7-5)		REF
- 3	41A-90435	.LEVER INSTL - FS 208 FLIGHT (SEE FIG. 2-7-7)		REF
	41A-90442	.BELLCRANK INSTL - FS 189 AILERON CTL		NP
	41A-90403	..LEVER ASSY - AILERON CONTROL		1
- 4	41A-90403-2	...LEVER - AILERON CONTROL		1
- 5	NAS43DD8-76	...SPACER		1
- 6	MS27641-8	...BEARING		2
- 7	S1246LS32-26-110	..WASHER - (V88308) (PEEL SHIMS AS REQUIRED)		2
- 8	NAS1108-44D	..BOLT		1
	AN960PD816	..WASHER		1
	AN320-8	..NUT		1
	MS24665-285	..COTTER PIN		1
	41A-90443	.LINK ASSY - AILERON CONTROL		1
	41A-90443-2	..LINK ASSY - AILERON CONTROL		1
- 9	41A-90443-4	...LINK - AILERON CONTROL		1
-10	MS21209F6-15	...INSERT		1
-11	ST4AR	..ROD END - (V77896)		1
	NAS509-6	..NUT		1
-12	NAS6204-14D	.BOLT		1
-13	NAS6204-12D	.BOLT		1
	AN960PD416	.WASHER		2
	AN320-4	.NUT		2
	MS24665-136	.COTTER PIN		2
	41A-90438	.LEVER INSTL - FS 260 AILERON CONTROL		NP
-14	41A-90426	..BRACKET - FS 260 AILERON CONTROL		1
-15	NAS1103-4	..BOLT		2
-16	NAS1103-12	..BOLT		3
	AN960PD10L	..WASHER		5
	41A-90425	..LEVER ASSY - FS 260 AILERON CONTROL		1
-17	41A-90425-2	...LEVER - FS 260 AILERON CONTROL		1
-18	41A-90430-18	...SPACER - FLIGHT CONTROLS		1
-19	MS27641-6	...BEARING		2
-20	NAS464P6-33	..BOLT		1
	AN960PD616	..WASHER		1
	AN320-6	..NUT		1
	MS24665-285	..COTTER PIN		1
-21	41A-90451-12	.TRAP - FLAME (IAW C-12-114-000/CF-199)		1
	41A-90437	.LEVER INSTL - FS 285 AILERON CONTROL		NP
-22	41A-90415	..BRACKET - FS 285 AILERON CONTROL (LH)		1
-23	41A-90436	..BRACKET - FS 285 AILERON CONTROL (RH)		1
-24	NAS6204-5	..BOLT		8
-25	NAS6204-7	..BOLT		4
	AN960PD416L	..WASHER		12
	MS21042L4	..NUT		12
	41A-90419	..LEVER ASSY - FS 285 AILERON CTL (LH)		1
-26	41A-90419-2	...LEVER - FS 285 AILERON CTL (LH)		1
-27	41A-90430-20	...SPACER - FLIGHT CONTROLS		1
-28	MS27641-6	...BEARING		2
	41A-90424	..IDLER ASSY - FS 285 AILERON CTL (RH)		1
-29	41A-90424-2	...IDLER - FS 285 AILERON CTL (RH)		1
-30	41A-90430-24	...SPACER - FLIGHT CONTROLS		1
-31	MS27641-6	...BEARING		2
	41A-90422	..LEVER ASSY - FS 285 AILERON CONTROL		2
-32	41A-90422-2	...LEVER - FS 285 AILERON CONTROL		1
-33	B4	....BEARING - (V77896)		1
-34	41A-90462	...RETAINER - FS 285 AIL. CTL (BEARING)		2
-35	41A-90430-22	...SPACER - FLIGHT CONTROLS		1
-36	MS27641-6	...BEARING		2
-37	NAS1106-68D	..BOLT - (LH)		1
-38	NAS1106-58D	..BOLT - (RH)		1

FIGURE AND INDEX NUMBER	GROUP FUEL SYSTEM MAJOR ASSEMBLY FORWARD FUSELAGE BELLCRANK & LEVERS PART NUMBER	1 2 3 4 5 6 7 NOMENCLATURE	EFFEC-TIVITY	UNITS PER ASSY
2-7-2	AN960PD616	..WASHER		2
	AN320-6	..NUT		2
	MS24665-285	..COTTER PIN		2
	41A-90410	.SHAFT INSTL - FS 231 CONTROL		NP
	41A-90413	.SHAFT INSTL - FS 263 CONTROL		NP
-39	41A-90408	..HOUSING - FLIGHT CONTROLS SHAFT		2
-40	NAS1103-4	..BOLT		6
-41	NAS1103-8	..BOLT		2
	41A-90444-2	..SHIM - FLIGHT CONTROLS LAMINATED		2
	AN960PD10	..WASHER		16
	MS21083N3	..NUT		8
-42	41A-90407	..SHAFT - FLIGHT CONTROLS		1
	41A-90405-2	..LEVER ASSY - FS 231 ELEVATOR CONTROL		1
	41A-90405-4	..LEVER ASSY - FS 231 RUDDER CONTROL		1
	41A-90405-6	..LEVER ASSY - FS 262 ELEVATOR CONTROL		1
	41A-90405-8	..LEVER ASSY - FS 262 RUDDER CONTROL		1
-43	41A-90405-10	...LEVER - (ON 41A-90405-2)		1
-44	41A-90405-12	...LEVER - (ON 41A-90405-4)		1
-45	41A-90405-14	...LEVER - (ON 41A-90405-6)		1
-46	41A-90405-16	...LEVER - (ON 41A-90405-8)		1
-47	41A-90430-4	...SPACER - FLIGHT CONTROLS		1
-48	B542DD	...BEARING - (V21335)		2
-49	41A-90430-10	..SPACER - FLIGHT CONTROLS		1
-50	AN386-1-13A	..PIN		2
	AN975-3	..WASHER		2
	MS21083N3	..NUT		2
-51	41A-90451-10	.TRAP - FLAME (IAW C-12-114-000/CF-199)		2
	41A-90455	.LEVER INSTL - FS 296 CONTROL		NP
	41A-90448	..LEVER ASSY - FLIGHT CTL (FS 296)		1
-52	41A-90446	...HOUSING - CONTROL BEARING (FS 296)		2
-53	41A-90447	...SHAFT - FLIGHT CTL (FS 296)		1
	41A-90445	...LEVER ASSY - FLIGHT CTL (FS 296)		2
-54	41A-90445-2	....LEVER - FLIGHT CTL (FS 296)		1
-55	41A-90430-8	....SPACER - FLIGHT CONTROLS		1
-56	B540DD	....BEARING - (V21335)		2
-57	41A-90430-12	...SPACER - FLIGHT CONTROLS		1
	AN385-1-12	...PIN		2
-58	NAS1103-2	..BOLT		8
	41A-90444-4	..SHIM - FLIGHT CONTROLS LAMINATED		1
	AN960PD10L	..WASHER		8
	MS21042L3	..NUT		8
-59	41A-90445	LEVER ASSY - CONTROL (FUS STA 339) (SEE FIG. 2-7-15)		REF
-60	41A-90099-144	ROD ASSY - CONTROL (BELLCRANK TO WS 60) (SEE FIG. 2-7-8)		REF
		-000-		

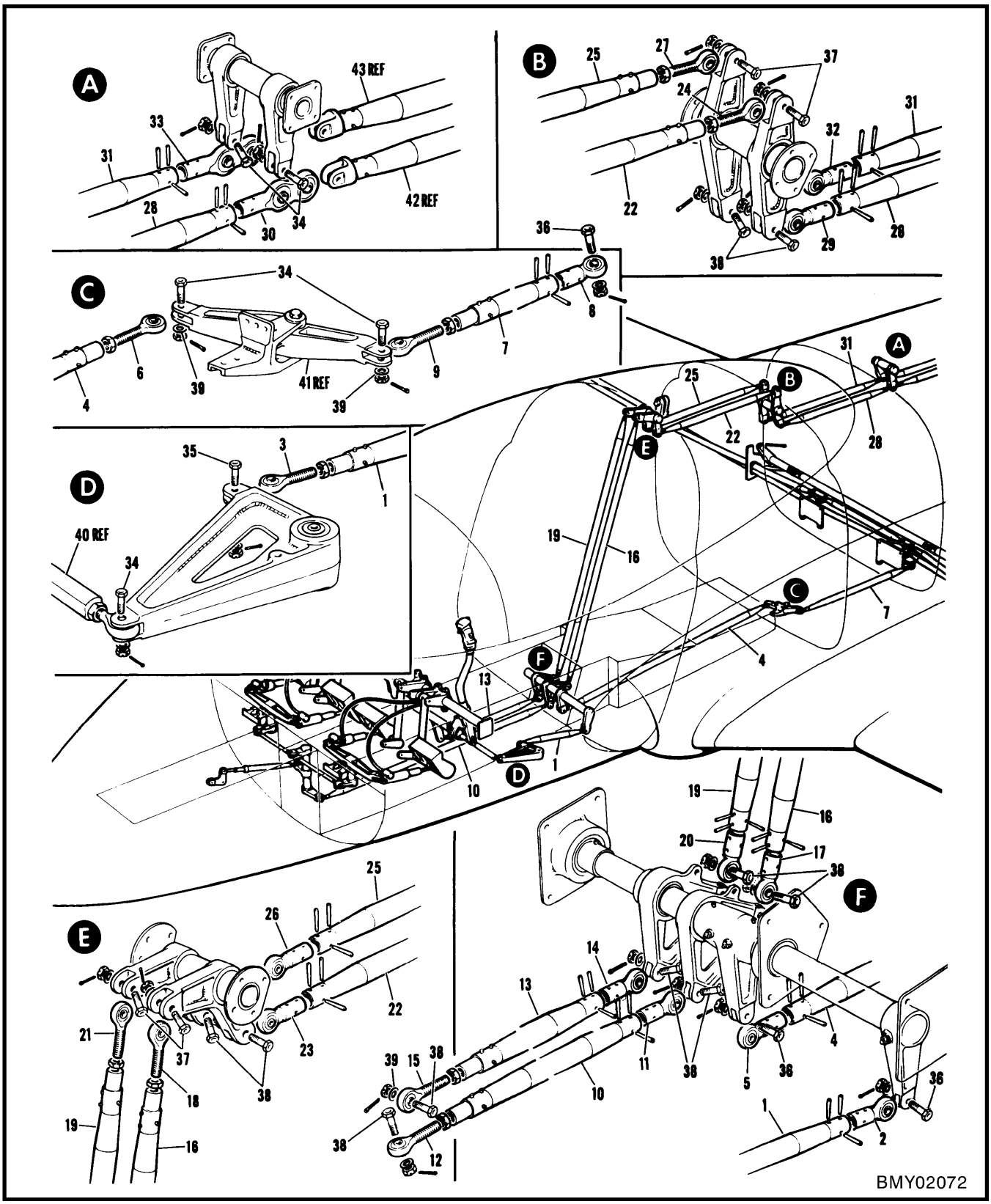

Figure 2-7-3 Forward Fuselage Control Rods

FIGURE AND INDEX NUMBER	GROUP FLIGHT CONTROLS MAJOR ASSEMBLY FORWARD FUSELAGE CONTROL RODS PART NUMBER	1 2 3 4 5 6 7 NOMENCLATURE	EFFEC-TIVITY	UNITS PER ASSY
2-7-3 -	41A-90004	FLIGHT CONTROLS INSTL - FORWARD FUSELAGE (SEE FIG. 2-7-2)		REF
	41A-90099-36	.ROD ASSY - AILERON CONTROL (FS 190-208) (FOR SPARES ORDER 41A-90099-72) OR		1
	41A-90099-72	.ROD ASSY - (SPARE FOR 41A-90099-36)		
	41A-90099-136	..ROD ASSY - AILERON CONTROL		1
- 1	41A-90099-236	...ROD - CONTROL		1
- 2	SPH4-10C1	...ROD END		1
	41A-90103	...INSERT - CONTROL ROD		1
	MS24692-111	...PIN		6
- 3	ST4AR	..ROD END - (V77896) (FOR SPARES ORDER 41A-90099-74) OR		1
	41A-90099-74	..ROD END - (SPARE FOR ST4AR)		
	NAS509-6	..NUT		1
	41A-90099-38	.ROD ASSY - AILERON CONTROL (FS 208-262)		1
	41A-90099-138	..ROD ASSY - AILERON CONTROL		1
- 4	41A-90099-238	...ROD - CONTROL		1
- 5	SPH4-10C1	...ROD END		1
	41A-90103	...INSERT - CONTROL ROD		1
	MS24692-111	...PIN		6
- 6	ST4AR	..ROD END - (V77896)		1
	NAS509-6	..NUT		1
	41A-90099-40	.ROD ASSY - AILERON CONTROL (FS 262-287)		1
	41A-90099-140	..ROD ASSY - AILERON CONTROL		1
- 7	41A-90099-240	...ROD - CONTROL		1
- 8	SPH4-10C1	...ROD END		1
	41A-90103	...INSERT - CONTROL ROD		1
	MS24692-111	...PIN		6
- 9	ST4AR	..ROD END - (V77896)		1
	NAS509-6	..NUT		1
	41A-90099-6	.ROD ASSY - RUDDER CONT (FS 154-208)		1
	41A-90099-106	..ROD ASSY - RUDDER CONTROL		1
-10	41A-90099-206	...ROD - CONTROL		1
-11	SPH4-10C1	...ROD END		1
	41A-90103	...INSERT - CONTROL ROD		1
	MS24692-111	...PIN		6
-12	ST4AR	..ROD END - (V77896)		1
	NAS509-6	..NUT		1
	41A-90099-20	.ROD ASSY - ELEVATOR CONT (FS 181-208)		1
	41A-90099-120	..ROD ASSY - ELEVATOR CONTROL		1
-13	41A-90099-220	...ROD - CONTROL		1
-14	SPH4-10C1	...ROD END		1
	41A-90103	...INSERT - CONTROL ROD		1
	MS24692-135	...PIN		6
-15	ST4AR	..ROD END - (V77896)		1
	NAS509-6	..NUT		1
	41A-90099-8	.ROD ASSY - RUDDER CONT (FS 208-231)		1
	41A-90099-108	..ROD ASSY - RUDDER CONTROL		1
-16	41A-90099-208	...ROD - CONTROL		1
-17	SPH4-10C1	...ROD END		1
	41A-90103	...INSERT - CONTROL ROD		1
	MS24692-111	...PIN		6
-18	ST4AR	..ROD END - (V77896)		1
	NAS509-6	..NUT		1
	41A-90099-22	.ROD ASSY - ELEVATOR CONT(FS 208-231)		1
	41A-90099-122	..ROD ASSY - ELEVATOR CONTROL		1
-19	41A-90099-222	...ROD - CONTROL		1
-20	SPH4-10C1	...ROD END		1
	41A-90103	...INSERT - CONTROL ROD		1
	MS24692-135	...PIN		6

FIGURE AND INDEX NUMBER	GROUP FLIGHT CONTROLS MAJOR ASSEMBLY FORWARD FUSELAGE CONTROL RODS PART NUMBER	1 2 3 4 5 6 7 NOMENCLATURE	EFFEC-TIVITY	UNITS PER ASSY
2-7-3 -21	ST4AR	..ROD END - (V77896)		1
	NAS509-6	..NUT		1
	41A-90099-10	.ROD ASSY - RUDDER CONT (FS 231-263)		1
	41A-90099-110	..ROD ASSY - RUDDER CONTROL		1
-22	41A-90099-210	...ROD - CONTROL		1
-23	SPH4-10C1	...ROD END		1
	41A-90103	...INSERT - CONTROL ROD		1
	MS24692-111	...PIN		6
-24	ST4AR	..ROD END - (V77896)		1
	NAS509-6	..NUT		1
	41A-90099-24	.ROD ASSY - ELEVATOR CONT(FS 231-263)		1
	41A-90099-124	..ROD ASSY - ELEVATOR CONTROL		1
-25	41A-90099-224	...ROD - CONTROL		1
-26	SPH4-10C1	...ROD END		1
	41A-90103	...INSERT - CONTROL ROD		1
	MS24692-135	...PIN		6
-27	ST4AR	..ROD END - (V77896)		1
	NAS509-6	..NUT		1
	41A-90099-12	.ROD ASSY - RUDDER CONT (FS 263-296)		1
-28	41A-90099-212	..ROD - CONTROL		1
-29	SPH4-10C1	..ROD END		1
	41A-90421	..END FITTING ASSY - AILERON CONTROL		1
-30	41A-90421-2	...END FITTING - AILERON CONTROL		1
	BR4H	...BEARING - (V77896)		2
		OR		
	BR4	...BEARING - (V77896)		
	MS24692-111	..PIN		6
	41A-90099-26	.ROD ASSY - ELEVATOR CONT (FS 263-296)		1
-31	41A-90099-226	..ROD - CONTROL		1
-32	SPH410C-1	..ROD END - (V77896)		1
	41A-90421	..END FITTING ASSY - AILERON CONTROL		1
-33	41A-90421-2	...END FITTING - AILERON CONTROL		1
	BR4H	...BEARING - (V77896)		2
		OR		
	BR4	...BEARING - (V77896)		
	MS24692-135	..PIN		6
-34	NAS6204-14D	.BOLT		5
-35	NAS6204-17D	.BOLT		1
-36	NAS6204-13D	.BOLT		3
-37	NAS6204-18D	.BOLT		4
-38	NAS6204-16D	.BOLT		10
-39	AN960PD416L	.WASHER		3
	AN960PD416	.WASHER		20
	AN320-4	.NUT		23
	MS24665-136	.COTTER PIN		23
-40	41A-90443	LINK ASSY - AILERON CONTROL (SEE FIG. 2-7-2)		REF
-41	41A-90425	LEVER ASSY - FS 260 AILERON CONTROL (SEE FIG. 2-7-2)		REF
-42	41A-90099-14	ROD ASSY - FS 296-339 RUDDER CONTROL (SEE FIG. 2-7-16)		REF
-43	41A-90099-28	ROD ASSY - FS 296-339 ELEVATOR CTL (SEE FIG. 2-7-16)		REF
		-000-		

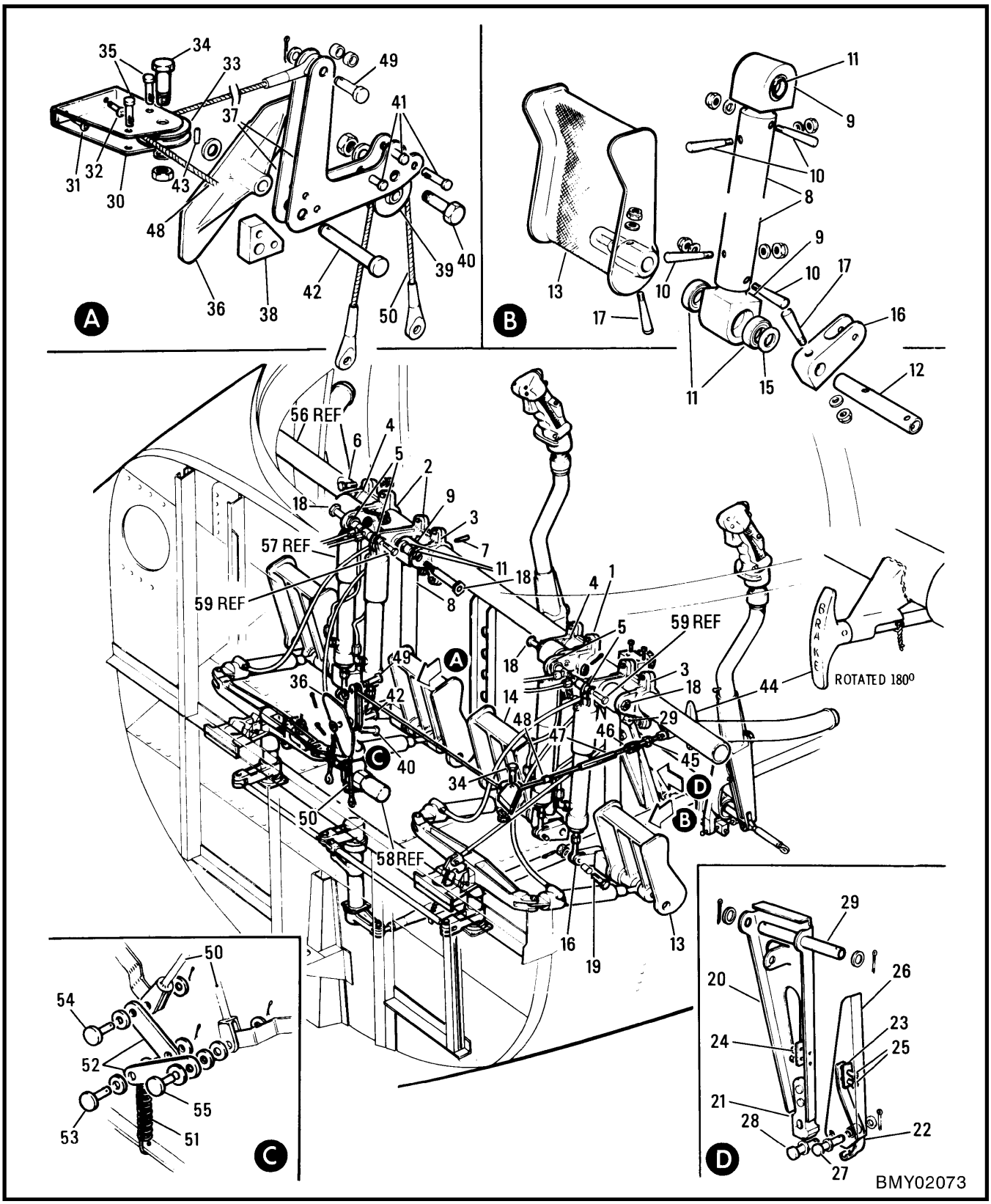

Figure 2-7-4 Cockpit Rudder & Brake Controls

FIGURE AND INDEX NUMBER	GROUP: FLIGHT CONTROLS MAJOR ASSEMBLY: COCKPIT RUDDER & BRAKE CONTROLS PART NUMBER		1 2 3 4 5 6 7 NOMENCLATURE	EFFEC-TIVITY	UNITS PER ASSY
2-7-4 -	41A-90201		RUDDER & BRAKE CONTROLS INSTL - COCKPIT		NP
- 1	41A-90210-2		.BRACKET - RUDDER CONTROL ATT (LH)		1
- 2	41A-90212		.BRACKET - RUDDER CONTROL ATT (RH)		2
	41A-90211		.BRACKET ASSY - RUDDER CONTROL LH		2
	41A-90211-1		.BRACKET ASSY - RUDDER CONTROL RH		2
- 3	41A-90211-2		..BRACKET - RUDDER CONTROL LH		1
- 4	41A-90211-3		..BRACKET - RUDDER CONTROL RH		1
- 5	MS20201KP5A		..BEARING		1
- 6	NAS6204-13		.BOLT		16
	AN960PD416		.WASHER		16
	MS21083N4		.NUT		16
- 7	AN386-2-18A		.PIN		4
	AN975-3		.WASHER		4
	MS21083N3		.NUT		4
	41A-90209-802		.PEDAL ASSY - RUDDER LH		2
	41A-90209-803		.PEDAL ASSY - RUDDER RH		2
	41A-90214		..ARM ASSY - RUDDER CONTROL PEDAL		1
- 8	41A-90214-2		...ARM - RUDDER CONTROL PEDAL		1
- 9	41A-90213		...ATTACHMENT - PEDAL ARM		2
-10	AN385A3P12		...PIN		4
-11	B539DD		...BEARING - (V21335)		4
-12	41A-90216		..SHAFT - RUDDER CONTROL		1
	41A-90215		..PEDAL ASSY - RUDDER CONTROL LH	001-120	1
	41A-90215-800		..PEDAL ASSY - RUDDER CONTROL LH	121-	1
	41A-90215-1		..PEDAL ASSY - RUDDER CONTROL RH	001-120	1
	41A-90215-801		..PEDAL ASSY - RUDDER CONTROL RH	121-	1
	41A-90215-2		...PEDAL - RUDDER CONTROL LH	001-120	1
-13	41A-90215-6		...PEDAL - RUDDER CONTROL LH	121-	1
	41A-90215-3		...PEDAL - RUDDER CONTROL RH	001-120	1
-14	41A-90215-7		...PEDAL - RUDDER CONTROL RH	121-	1
-15	NAS43DD12-6		..SPACER		1
-16	41A-90232-2		..LEVER - BRAKE CONTROL		1
-17	AN386-1-11A		..PIN		2
	AN975-3		..WASHER		2
	MS21083N3		..NUT		2
-18	41A-90217		.BOLT - PEDAL ARM		4
	AN320-6		.NUT		4
	MS24665-368		.COTTER PIN		4
-19	NAS6204-32D	*	.BOLT - (PEDAL LEVER TO BRAKE CYLINDER)		4
	C70A47179-1	*	.SPACER		4
	AN960PD416L	*	.WASHER		4
	AN320-4		.NUT		4
	MS24665-132		.COTTER PIN		4
	41A-90334		.LEVER ASSY - CONTROL LOCKING		1
	41A-90334-2		..CHANNEL ASSY - CONTROL LOCKING LEVER		1
-20	41A-90340-4		...CHANNEL - CONTROL LOCKING		1
-21	41A-90335		...ATTACHMENT - PAWL		1
	NAS528A6		...COLLAR		2
-22	41A-90340-6		...SPRING - CONTROL LOCKING		1
-23	41A-90340-8		..WASHER - THROAT		1
-24	41A-90340-10		..WASHER - THROAT		1
R -25	NAS623-2-5		..SCREW		2
	MS21083N08		..NUT		2
-26	41A-90340-2		..LEVER - CONTROL LOCKING		1
-27	S1225-5-80		..PIN - (V88308)		1
	NAS43HT2-39		..SPACER		1
	AN960PD8L		..WASHER		2
	MS24665-130		..COTTER PIN		1
		*	IAW C-12-114-000/CF-319		

FIGURE AND INDEX NUMBER	GROUP FLIGHT CONTROLS MAJOR ASSEMBLY COCKPIT RUDDER & BRAKE CONTROLS PART NUMBER	1 2 3 4 5 6 7 NOMENCLATURE	EFFEC-TIVITY	UNITS PER ASSY
2-7-4 -28	S1225-6-80	..PIN - (V88308)		1
	AN960PD10L	..WASHER		5
	MS24665-130	..COTTER PIN		1
-29	41A-90333	.TUBE - CONTROL LOCKING		1
	AN960PD616	.WASHER		2
	MS24665-132	.COTTER PIN		2
-30	41A-90336-2	.BRACKET ASSY - PARKING BRAKE		1
-31	NAS623-3-4	.SCREW		1
-32	NAS623-3-6	.SCREW		1
-33	MS20219A1	.PULLEY		1
-34	NAS6204-9	.BOLT		1
	AN960PD416	.WASHER		1
	MS21083N4	.NUT		1
-35	NAS427K9	.PIN - (CABLE GUARD)		2
-36	41A-90327	.MOUNTING - PARKING BRAKE LEVER		1
	41A-90329	.LEVER ASSY - PARKING BRAKE		1
-37	41A-90336-8	..PLATE - (PARKING BRAKE LEVER)		2
-38	41A-90326	..SPACER - PARKING BRAKE		1
-39	MS20219A1	..PULLEY		1
-40	NAS6204-9	..BOLT		1
	AN960PD416	..WASHER		1
	MS21083N4	..NUT		1
-41	NAS427K9	..PIN - (CABLE GUARD)		3
-42	MS20392-3C41	.PIN - (LEVER PIVOT)		1
	AN960PD416L	.WASHER		1
-43	NAS561P2-10	.PIN - (THROUGH PIVOT)		1
-44	41-90364	.HANDLE - PARKING BRAKE (PORT)		1
	NAS561P2-6	.PIN		1
-45	AN42B24A	.EYEBOLT		1
	NAS561P2-10	.PIN		1
	MS20995F41	.LOCKWIRE		AR
-46	NAS645-8LS	.FORK END		1
	MS20392-2C9	.PIN		1
	AN960PD10L	.WASHER		1
	MS24665-132	.COTTER PIN		1
-47	NAS649B8S	.BARREL		1
	NAS651-16S	.CLIP		1
-48	41A-90330	.CABLE ASSY - PARKING BRAKE		1
-49	MS20392-2C19	.PIN		1
	NAS43DD3-11	.SPACER		2
	AN960PD10L	.WASHER		1
	MS24665-132	.COTTER PIN		1
-50	41A-90328	.CABLE ASSY - PARKING BRAKE		1
-51	MS24586-96	.SPRING		1
-52	41A-90201-94	.LINK - (PARKING BRAKE CABLE)		2
-53	MS20392-2C7	.PIN		1
-54	MS20392-2C11	.PIN		1
-55	MS20392-2C13	.PIN		1
	AN960PD10L	.WASHER		5
	AN960PD10	.WASHER		1
	MS24665-132	.COTTER PIN		3
-56	41A-35091-2	TUBE ASSY - WELDED CROSS (SEE SECTION 3)		REF
-57	70777	CYLINDER ASSY - MASTER BRAKE(SEE SECTION 8)		REF
-58	70775-1	VALVE ASSY - PARKING BRAKE (SEE SECTION 8)		REF
-59	41A-75050-10	BOLT - (SEE SECTION 8)		REF
		(CONTINUED SEE FIG. 2-7-5)		

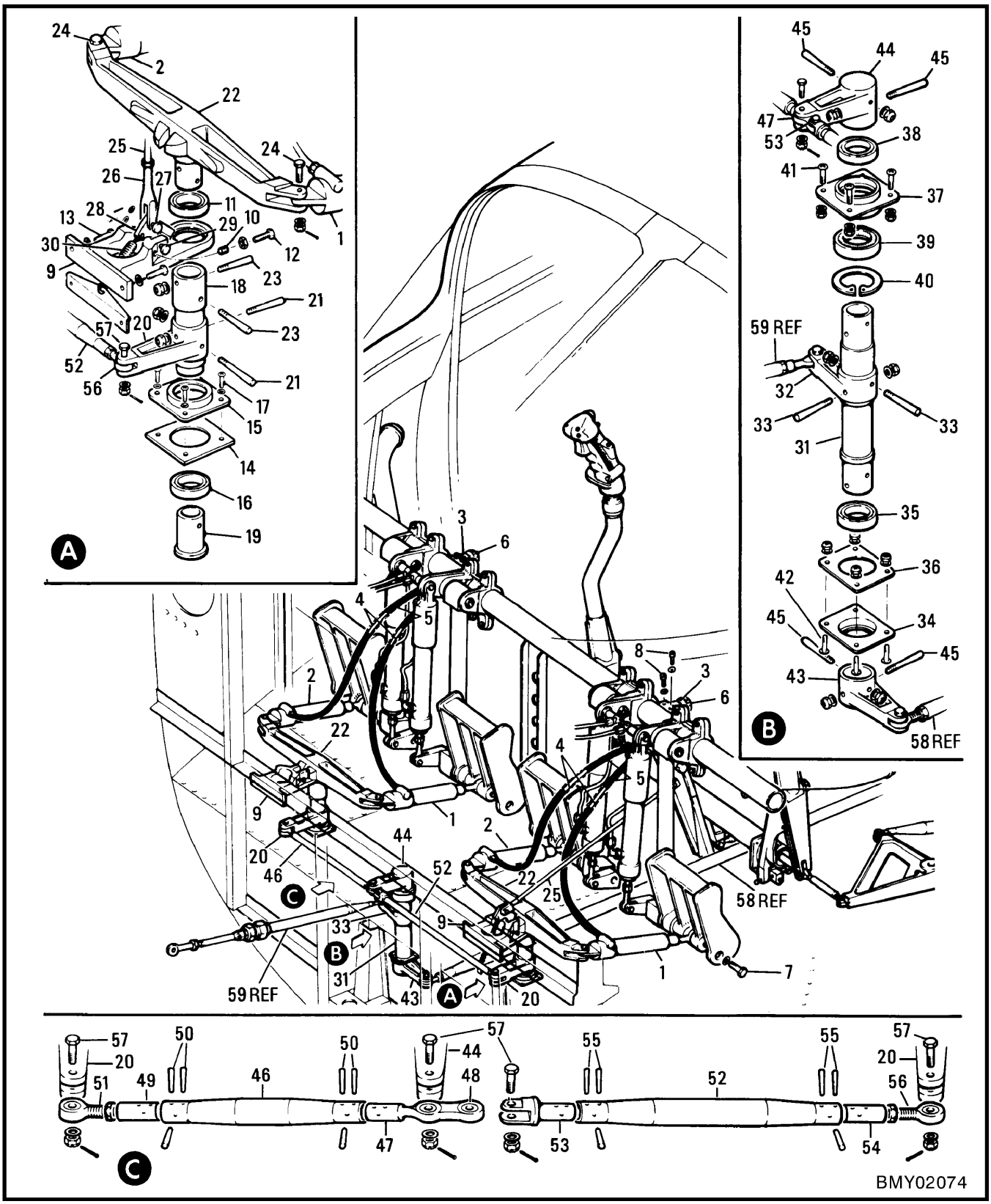

Figure 2-7-5 Cockpit Rudder & Brake Controls

FIGURE AND INDEX NUMBER	GROUP FLIGHT CONTROLS MAJOR ASSEMBLY COCKPIT RUDDER & BRAKE CONTROLS PART NUMBER		1 2 3 4 5 6 7 NOMENCLATURE	EFFEC-TIVITY	UNITS PER ASSY
2-7-5 -	41A-90201		RUDDER & BRAKE CONTROLS INSTL - COCKPIT (SEE FIG. 2-7-4)		REF
	R819-2	*	.SCREW JACK ASSY - (V36123) (IAW 41A-90208-806)		2
- 1	R532M30-21	*	..SCREW JACK ASSY - LH (V36123) (RUDDER)		1
- 2	R532M30-11	*	..SCREW JACK ASSY - RH (V36123) (RUDDER)		1
- 3	R1066-1	*	..GEARBOX ASSY - (V36123) (RUDDER PEDAL)		1
- 4	R196M40	*	..DRIVE - (V36123) (FLEXIBLE)		2
- 5	NO NUMBER		..HOSE - STIFFENER (IAW C-12-114-000/CF-319)		4
- 6	41A-90208-10	*	..KNOB - (V36123) (RUDDER PEDAL ADJUSTMENT)		1
- 7	41A-90201-93		.BOLT		4
	AN960PD416		.WASHER		4
- 8	AN501AD10-8		.SCREW - (GEARBOX)		4
	AN960PD10		.WASHER		4
	41-90530		.SUPPORT ASSY - RUDDER CONTROL		2
- 9	41-90530-2		..SUPPORT - RUDDER CONTROL		1
-10	MS21209F5-15		..INSERT		2
-11	B542DD		..BEARING - (V21335)		1
-12	NAS428H5-14		.BOLT		4
	NAS509-5		.NUT		4
-13	NAS6204-10		.BOLT		4
	AN960PD416		.WASHER		4
-14	41-90533		.SPACER - BEARING		2
-15	41-90532		.HOUSING - BEARING		2
-16	B542DD		.BEARING - (V21335)		2
R -17	NAS623-3-5		.SCREW - (HOUSING)		8
	AN960PD10		.WASHER		8
-18	41A-90222-2		.SHAFT - COCKPIT RUDDER CONTROL		2
-19	41-90534		.RETAINER - BEARING		2
-20	41A-90221-2		.LEVER - COCKPIT RUDDER CONTROL		2
-21	AN386-1-15A		.PIN		4
	AN975-3		.WASHER		4
	MS21083N3		.NUT		4
-22	41A-90225		.T-FITTING - (LEVER)		2
-23	AN386-1-12A		.PIN		4
	AN975-3		.WASHER		4
	MS21083N3		.NUT		4
-24	NAS464P4-17		.BOLT		4
	AN960PD416		.WASHER		4
	AN320-4		.NUT		4
	MS24665-132		.COTTER PIN		2
	41A-90339		.ROD ASSY - CONTROL LOCKING (PORT)		1
-25	41A-90338		..ROD - CONTROL LOCKING		1
-26	MS27975-2		..FORK END		2
	NAS509-4		..NUT		2
-27	MS20392-3C11		.PIN - (ROD PIVOT)		2
	AN960PD416L		.WASHER		2
	MS24665-132		.COTTER PIN		2
-28	41-90531		.PLATE - GUST LOCK (PORT)		1
-29	MS20392-3C45		.PIN - (PLATE PIVOT PORT)		1
	AN960PD416L		.WASHER		1
	MS24665-132		.COTTER PIN		1
-30	41A-90367		.SPRING - GUST LOCK EXTENSION (PORT)		1
-31	41A-90228		.SHAFT - RUDDER CONTROL CENTRE		1
-32	41A-90233-2		.LEVER - NOSE WHEEL STEERING		1
-33	AN386-1-14A		.PIN		2
	AN975-3		.WASHER		1
	MS21083N3		.NUT		1
	41A-90227		.HOUSING ASSY - BEARING		1
-34	41A-90227-2		..HOUSING - BEARING		1
-35	B542DD		..BEARING - (V21335)		1
-36	41A-90201-84		.SHIM		AR
	41A-90226		.HOUSING ASSY - BEARING		1
		*	FOR BRKDN SEE C-13-B59-000/MS-000		

FIGURE AND INDEX NUMBER	GROUP FLIGHT CONTROLS MAJOR ASSEMBLY COCKPIT RUDDER & BRAKE CONTROLS PART NUMBER	1 2 3 4 5 6 7 NOMENCLATURE	EFFEC-TIVITY	UNITS PER ASSY
2-7-5 -37	41A-90226-2	..HOUSING - BEARING		1
-38	B542DD	..BEARING - (V21335)		1
-39	63X565	..SEAL - (V08479)		1
-40	MS16625-212	..RING - RETAINING		1
R -41	NAS623-3-3	.SCREW		4
R -42	NAS623-3-4	.SCREW		4
	AN960PD10	.WASHER		8
	MS21083N3	.NUT		8
-43	41A-90221-6	.LEVER - RUDDER CONTROL		1
-44	41A-90221-4	.LEVER - RUDDER CONTROL		1
-45	AN386-1-15A	.PIN		4
	AN975-3	.WASHER		3
	MS21083N3	.NUT		4
	41A-90099-4	.ROD ASSY - CONTROL		1
	41A-90099-104	..ROD ASSY - CONTROL		1
-46	41A-90099-204	...ROD - CONTROL		1
	41A-90421	...END FITTING ASSY - AILERON CONTROL		1
-47	41A-90421-2	....END FITTING - AILERON CONTROL		1
-48	BR4H	....BEARING - (V77896)		2
		OR		
	BR4	....BEARING - (V77896)		
-49	41A-90103	...INSERT - CONTROL ROD		1
-50	MS24692-111	...PIN		6
-51	ST4AR	..ROD END - (V77896)		1
	NAS509-6	..NUT		1
	41A-90099-2	.ROD ASSY - CONTROL		1
	41A-90099-102	..ROD ASSY - CONTROL		1
-52	41A-90099-202	...ROD - CONTROL		1
-53	41A-90440	...END FITTING - FLIGHT CONTROL		1
-54	41A-90103	...INSERT - CONTROL ROD		1
-55	MS24692-111	...PIN		6
-56	ST4AR	..ROD END - (V77896)		1
	NAS509-6	..NUT		1
-57	NAS6204-16D	.BOLT		4
	AN960PD416L	.WASHER		AR
	AN960PD416	.WASHER		4
	AN320-4	.NUT		4
	MS24665-132	.COTTER PIN		4
-58	41A-90099-6	ROD ASSY - FS 154-208 RUDDER CONTROL (SEE FIG. 2-7-3)		REF
-59	41A-90378	BUNGEE ASSY - NOSE WHEEL STEERING (SEE SECTION 4)		REF

-000-

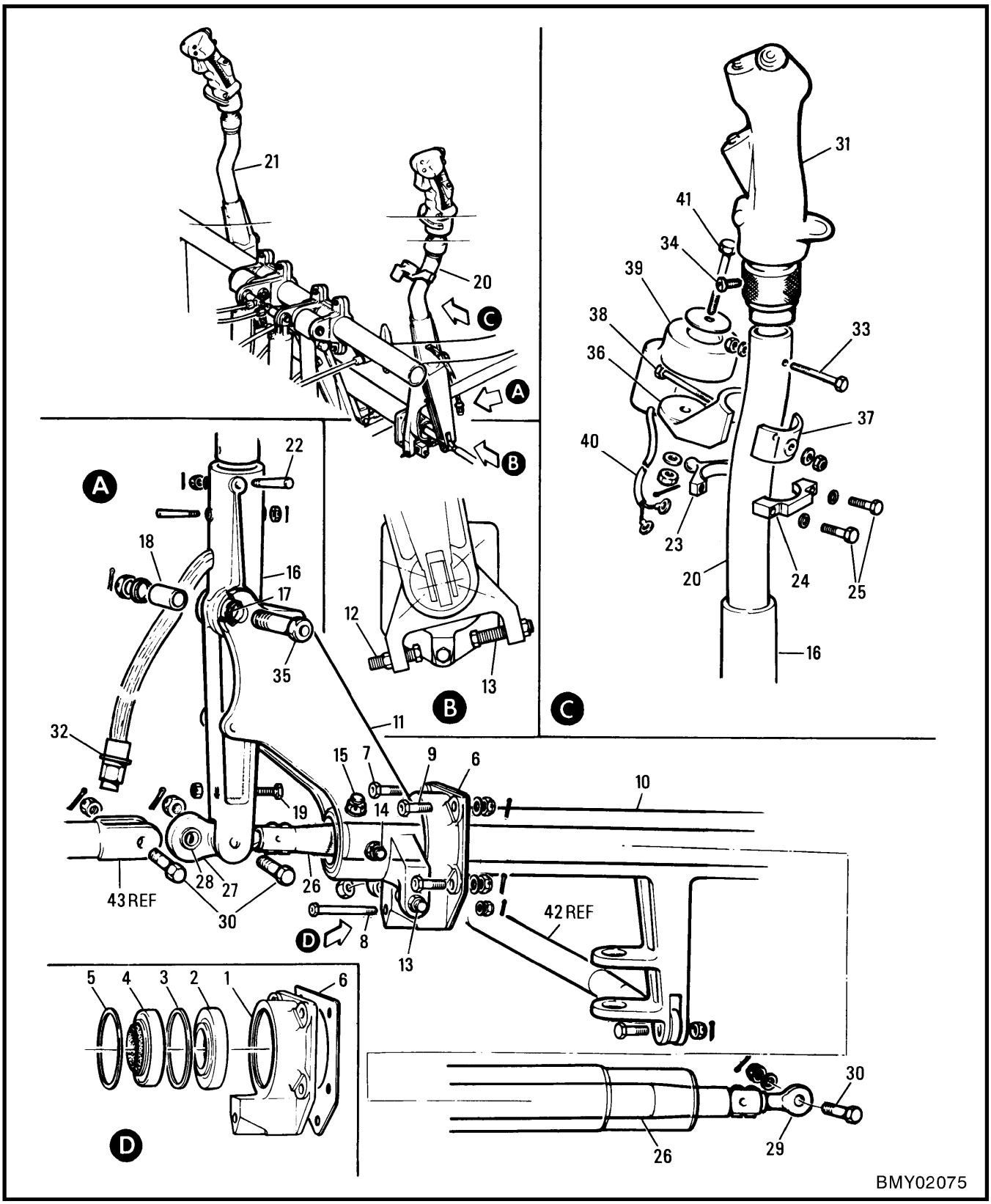

Figure 2-7-6 Control Column

FIGURE AND INDEX NUMBER	GROUP FLIGHT CONTROLS MAJOR ASSEMBLY CONTROL COLUMN PART NUMBER		1 2 3 4 5 6 7 NOMENCLATURE	EFFEC-TIVITY	UNITS PER ASSY
2-7-6 -	41A-90151-806		CONTROL COLUMN ASSY (FOR SPARES ORDER 41A-90151-808) (SEE FIG. 2-7-2)		1
			OR		
	41A-90151-808		CONTROL COLUMN - (SPARE FOR 41A-90151-806)		
	41A-90152		.BEARING ASSY - CONTROL COLUMN		2
- 1	41A-90152-2		..HOUSING - CONTROL COLUMN BEARING		1
- 2	MS27648-33		..BEARING		1
- 3	41A-90153		..SPACER - CONTROL COLUMN BEARING		1
- 4	63X1327		..SEAL - (V08479)		1
- 5	MS16625-1300		..RING - (RETAINING)		1
- 6	41A-90159		.SHIM - CONTROL COLUMN		AR
- 7	NAS6204-8D		.BOLT		4
- 8	NAS6204-34D		.BOLT		2
			OR		
	AN4-24		.BOLT		
- 9	NAS6204-7D		.BOLT		4
	AN960PD416		.WASHER		10
	AN310-4		.NUT		10
	MS24665-136		.COTTER PIN		10
-10	41A-90155		.SHAFT - ELEVATOR TORQUE		1
	41A-90154		.FORK ASSY - CONTROL COLUMN		2
-11	41A-90154-2		..FORK - CONTROL COLUMN		1
	MS21209F5-15		..INSERT		2
-12	NAS428-5-20		.BOLT - (FORK ADJUSTER)		2
			OR		
	NAS428H5-20		.BOLT - (FORK ADJUSTER)		
-13	NAS428-5-12		.BOLT - (FORK ADJUSTER)		2
			OR		
	41A-90151-950		.BOLT - (FORK ADJUSTER)		
	MS21042L5		.NUT		4
-14	NAS1105-8D		.BOLT		4
-15	41A-90151-100		.BOLT		4
	AN960PD516		.WASHER - (UNDER NUT)		8
	AN320-5		.NUT		8
	MS24665-132		.COTTER PIN		8
	41A-90157		.LEVER ASSY - CONTROL COLUMN		2
-16	41A-90157-2		..LEVER - CONTROL COLUMN		1
-17	MS27641-10		..BEARING		2
-18	NAS43-10-102		..SPACER - (BEARING)		1
-19	NAS428H5-20		..BOLT - (ADJUSTER)		1
	MS21042L5		..NUT		1
-20	41A-90156-800	*	.TUBE - CONTROL COLUMN LH		1
-21	41A-90156-1		.TUBE - CONTROL COLUMN RH		1
-22	AN386-1-13		.PIN		4
	AN975-3		.WASHER		4
	AN320-3		.NUT		4
	MS24665-132		.COTTER PIN		4
-23	41G-90010-2	*	.SPIGOT - CONTROL COLUMN LOCKING LH		1
-24	41G-90010-4	*	.SPIGOT - CONTROL COLUMN LOCKING LH		1
-25	MS20073-03-10	*	.BOLT		2
	AN960-10L	*	.WASHER		2
	41A-90099-58		.ROD ASSY - CONTROL		1
	41A-90099-158		..ROD ASSY - CONTROL		1
-26	41A-90099-258		...ROD - CONTROL		1
	41A-90449		...END FITTING ASSY - AILERON CONTROL		1
-27	41A-90449-2		....END FITTING - AILERON CONTROL		1
-28	B4		....BEARING - (V77896)		2
	41A-90103		...INSERT - FLIGHT CONTROL ROD		1
	MS24692-111		...PIN		6
-29	ST4BR3		..ROD END - (V77896)		1
	NAS509-6		..NUT		1
		*	CONTROL COLUMN LH TUBE SPARE DETAILS, ORDER AS 41A-90151-810 SPARE ASSY		

FIGURE AND INDEX NUMBER	GROUP FLIGHT CONTROLS MAJOR ASSEMBLY CONTROL COLUMN PART NUMBER	1 2 3 4 5 6 7 NOMENCLATURE	EFFEC-TIVITY	UNITS PER ASSY
2-7-6 -30	NAS6204-13D	.BOLT		3
	AN960PD416	.WASHER		3
	AN310-4	.NUT		3
	MS24665-136	.COTTER PIN		3
	41A-57132	.HARNESS ASSY - P7 TO STICK GRIP DISCONNECT		2
R -31	G56679 *	..GRIP ASSY - TYPE B8A, OR		2
R	G56679SB **	..GRIP ASSY - TYPE B8A		2
	S1244B11-41	..CONDUIT - (V88308)		1
-32	PT06SE14-19P	..PLUG - (V77820) (P7 DISCONNECT)		1
-33	NAS1003-19H	.BOLT		2
	S1324-3-20	.WASHER - (V88308)		2
	MS21043-3	.NUT		2
-34	AN502-10-4	.SCREW		2
-35	41A-90158	.BOLT - CONTROL COLUMN		2
	AN960PD1016	.WASHER		2
	AN320-10	.NUT		2
	MS24665-357	.COTTER PIN		2
-36	41A-90236-6	.BRACKET - CONTROL SHAKER MOUNTING		1
-37	41A-90236-4	.CLAMP - CONTROL SHAKER MTG BRACKET		1
-38	NAS1204-25	.BOLT		1
	AN960PD416	.WASHER		1
	MS21043-4	.NUT		1
	41A-90151-55	.SHAKER ASSY - CONTROL		1
-39	C75502	..SHAKER - (V83326) (CONTROL) (IAW 41A-50700-6) FOR BKDN SEE C-17-749-000/MN-000		1
-40	S1244B19-30	..CONDUIT - (V88308)		1
-41	NAS6204-34D	.BOLT		1
	41A-90151-51	.WASHER		1
	AN960PD416	.WASHER		1
	AN310-4	.NUT		1
	MS24665-136	.COTTER PIN		1
-42	41A-90099-20	ROD ASSY - FS 181-208 ELEVATOR CONTROL (SEE FIG. 2-7-3)		REF
-43	41A-90443	LINK ASSY - AILERON CONTROL (SEE FIG. 2-7-2)		REF
		-000-		
R	*	APPLICABILITY NON-SNOWBIRD AIRCRAFT		
R	**	FOR SNOWBIRD AIRCRAFT (RED DOT BELOW MUTE SWITCH INDICATES GRIP ASSY - P/N G56679 MODIFIED FOR VHF PTT) IAW C-12-114-000/CF-525		

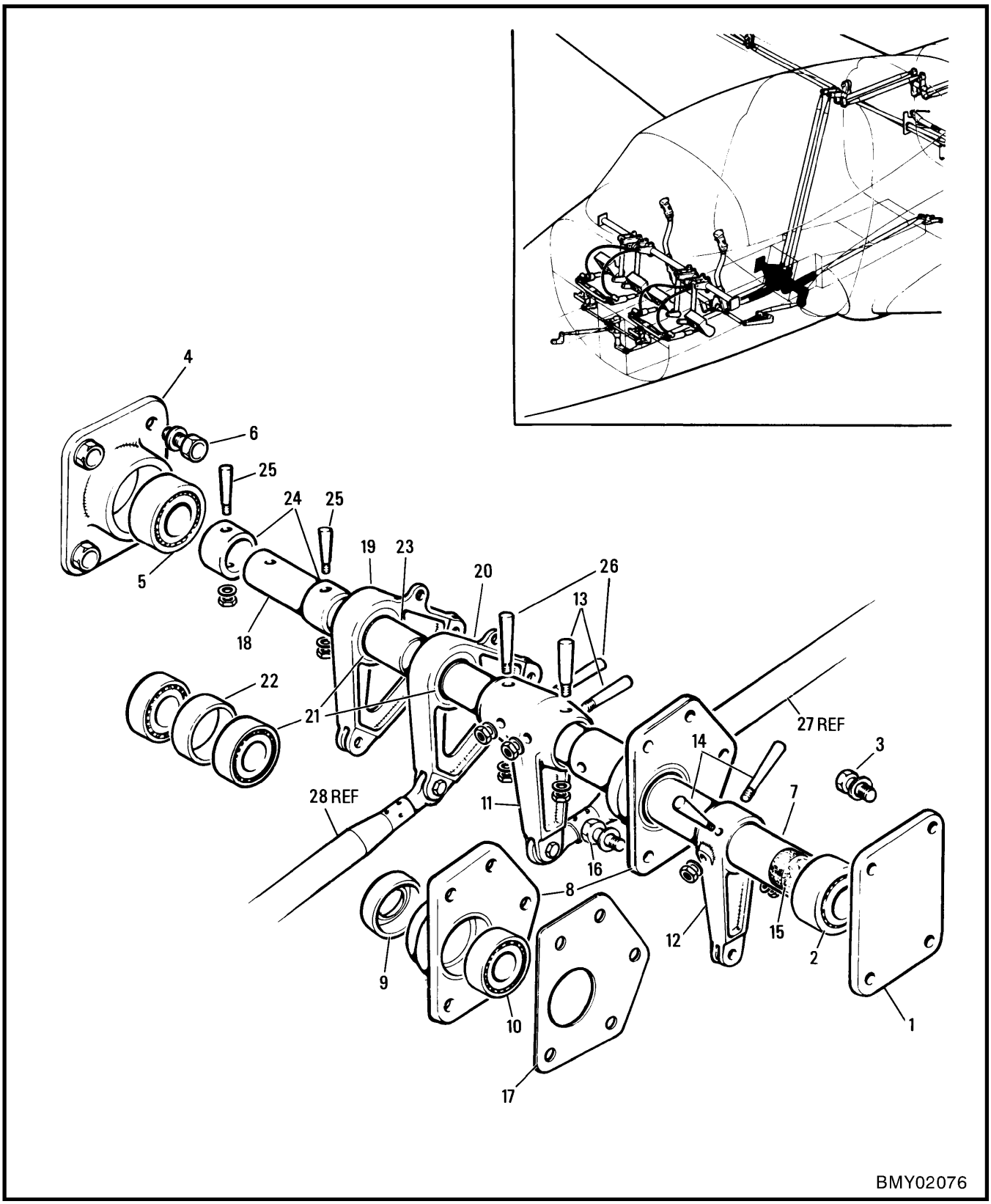

Figure 2-7-7 Cockpit Flight Control Levers

FIGURE AND INDEX NUMBER	GROUP FLIGHT CONTROLS MAJOR ASSEMBLY COCKPIT FLIGHT CONTROL LEVERS PART NUMBER	1 2 3 4 5 6 7 NOMENCLATURE	EFFEC-TIVITY	UNITS PER ASSY
2-7-7 -	41A-90435	LEVER INSTL - FS 208 FLIGHT CONTROL (SEE FIG. 2-7-2)		NP
	41A-90414	.HOUSING ASSY - AIL TORQUE SHAFT BEARING		1
- 1	41A-90414-2	..HOUSING - AILERON TORQUE SHAFT BEARING		1
- 2	MS27648-25	..BEARING		1
- 3	NAS6204-6	.BOLT		4
	AN960PD416	.WASHER		4
	41A-90412	.HOUSING ASSY - FS 208 FLIGHT CTL BRG		1
- 4	41A-90412-2	..HOUSING - FS 208 FLIGHT CTL BEARING		1
- 5	MS27648-21	..BEARING		1
- 6	NAS6204-8	.BOLT		4
	AN960PD416	.WASHER		4
	41A-90432	.SHAFT ASSY - FS 208 AIL CTL TORQUE		1
- 7	41A-90428	..SHAFT - FS 208 AIL CONTROL TORQUE		1
	41A-90416	..HOUSING ASSY - AIL. TORQUE SHAFT BEARING		1
- 8	41A-90416-2	...HOUSING - AILERON TORQUE SHAFT BEARING		1
- 9	63X700	...SEAL - (V08479)		1
-10	MS27648-25	...BEARING		1
-11	41A-90404	..LEVER - FS 208 AILERON CONTROL		1
-12	41A-90411	..LEVER - FS 208 AILERON CONTROL		1
-13	AN386-2-16A	..PIN		2
-14	AN386-2-18A	..PIN		2
	AN975-3	..WASHER		4
	MS21042L3	..NUT		4
-15	41A-90432-10	..CORK - AILERON TORQUE SHAFT SEALING		1
-16	NAS6204-8	.BOLT		5
	AN960PD416L	.WASHER		5
-17	41A-90435-16	.SHIM - FLIGHT CONT LEVERBEARING HOUSING		AR
-18	41A-90431-2	.SHAFT - FS 208 FLIGHT CONTROL		1
	41A-90429-2	.LEVER ASSY - FS 208 FLIGHT CONTROL (ELEVATOR)		1
	41A-90429-4	.LEVER ASSY - FS 208 FLIGHT CONTROL (RUDDER)		1
-19	41A-90429-6	..LEVER - FS 208 FLIGHT CTL (ELEVATOR)		1
-20	41A-90429-8	..LEVER - FS 208 FLIGHT CTL (RUDDER)		1
-21	B542DD	..BEARING - (V21335)		2
-22	41A-90430-4	..SPACER - FLIGHT CONTROL (LEVER)		1
-23	41A-90430-6	.SPACER - FLIGHT CONTROL (LEVER)		1
-24	41A-90430-2	.SPACER - FLIGHT CONTROL (LEVER)		2
-25	AN386-1-12A	.PIN		2
	AN975-3	.WASHER		4
	MS21042L3	.NUT		4
-26	AN386-2-15A	.PIN		2
-27	41A-90099-38	ROD ASSY - FS 208-262 AILERON CONTROL (SEE FIG. 2-7-3)		REF
-28	41A-90099-6	ROD ASSY - FS 154-208 RUDDER CONTROL (SEE FIG. 2-7-3)		REF

-000-

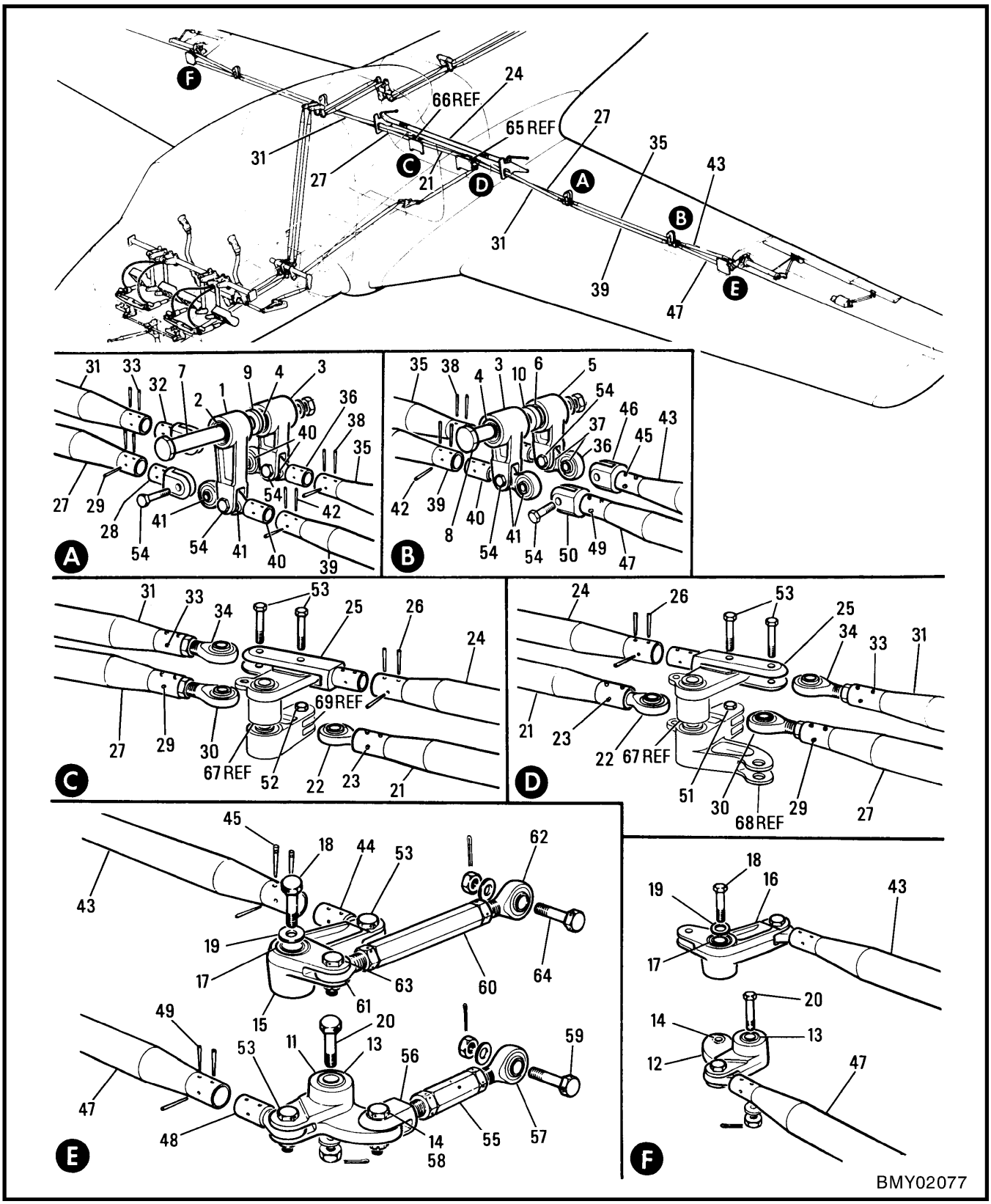

Figure 2-7-8 Aileron Controls

FIGURE AND INDEX NUMBER	GROUP FLIGHT CONTROLS MAJOR ASSEMBLY AILERON CONTROLS PART NUMBER	1 2 3 4 5 6 7 NOMENCLATURE	EFFEC-TIVITY	UNITS PER ASSY
2-7-8 -	41A-90651-800	AILERON CONTROL INSTL - WING PORT (SEE SECTION 1)		NP
	41A-90651-801	AILERON CONTROL INSTL - WING STBD		NP
	41A-90652	.LEVER ASSY - WS 60 AILERON CONTROL		1
- 1	41A-90652-2	..LEVER - WS 60 AILERON CONTROL		1
	41A-90430-30	..SPACER - FLIGHT CONTROL		1
- 2	B538DD	..BEARING - (V21335)		2
	41A-90653	.LEVER ASSY - WS 60 & 105 AIL CTL		2
- 3	41A-90653-2	..LEVER - WS 60 & 105 AILERON CONTROL		1
	41A-90430-32	..SPACER - FLIGHT CONTROL		1
- 4	B538DD	..BEARING - (V21335)		2
	41A-90655	.LEVER ASSY - WS 105 AILERON CONTROL		1
- 5	41A-90655-2	..LEVER - WS 105 AILERON CONTROL		1
	41A-90430-34	..SPACER - FLIGHT CONTROL		1
- 6	B538DD	..BEARING - (V21335)		2
- 7	41A-90654-8	.BOLT - WING AILERON CONTROL (WS 60)		1
- 8	41A-90654-6	.BOLT - WING AILERON CONTROL (WS 105)		1
- 9	NAS43DD10-17	.SPACER - (WS 60)		1
-10	NAS43DD10-7	.SPACER - (WS 105)		1
	AN960PD416	.WASHER		2
	NAS509-6	.NUT		2
	41A-90657	.LEVER ASSY - WS 129 AILERON CTL LH		1
	41A-90657-1	.LEVER ASSY - WS 129 AILERON CTL RH		1
-11	41A-90657-2	..LEVER - WS 129 AILERON CONTROL LH		1
-12	41A-90567-3	..LEVER - WS 129 AILERON CONTROL RH (8830841A-90657-3)		1
	41A-90430-40	..SPACER - FLIGHT CONTROL		1
-13	MS24461-6	..BEARING		2
-14	BR4H	..BEARING - (V77896)		1
		OR		
	BR4	..BEARING - (V77896)		
	41A-90658-800	.LEVER ASSY - WS 129 AILERON CTL LH		1
	41A-90658-801	.LEVER ASSY - WS 129 AILERON CTL RH		1
-15	41A-90658-2	..LEVER - WS 129 AILERON CONTROL LH		1
-16	41A-90658-3	..LEVER - WS 129 AILERON CONTROL RH		1
	41A-90430-46	..SPACER - FLIGHT CONTROL		1
-17	B538DD	..BEARING - (V21335)		2
-18	41A-90659-2	.BOLT - WS 129 AILERON CONTROL		1
-19	41A-90651-950	.SHIM - WING AILERON CONTROL LEVER (UPPER)		AR
	41A-90651-952	.SHIM - WING AILERON CONTROL LEVER (LOWER)		AR
-20	NAS1106-32D	.BOLT - (WS 129)		1
	AN960PD616	.WASHER		2
	AN320-6	.NUT		2
	MS24665-283	.COTTER PIN		2
	41A-90099-42	.ROD ASSY - FS 289 CTL (LOWER)		1
-21	41A-90099-242	..ROD - FS 289 CONTROL (LOWER)		1
-22	SPH4-10C1	..ROD END		2
-23	MS24692-108	..PIN		6
	41A-90099-50	.ROD ASSY - FS 289 CTL (UPPER)		1
-24	41A-90099-250	..ROD - FS 289 CONTROL (UPPER)		1
-25	41A-90453	..FORK - FS 289 AILERON CONTROL		2
-26	MS24692-135	..PIN		6
	41A-90099-52	.ROD ASSY - BELLCRANK TO WS 60 CTL		1
-27	41A-90099-152	..ROD ASSY - BELLCRANK TO WS 60 CTL		1
	41A-90099-252	...ROD - BELLCRANK TO WS 60 CTL		1
-28	41A-90440	...END FITTING - FLIGHT CONTROL		1
	41A-90103-4	...INSERT - FLIGHT CONTROL ROD		1
-29	MS24692-111	...PIN		6
-30	ST4AR	..ROD END - (V77896)		1
	NAS509-6	..NUT		1
	41A-90099-44	.ROD ASSY - BELLCRANK TO WS 60 CTL		1
-31	41A-90099-144	..ROD ASSY - BELLCRANK TO WS 60 CTL		1
	41A-90099-244	...ROD - BELLCRANK TO WS 60 CTL		1
-32	41A-90440	...END FITTING - FLIGHT CONTROL		1

FIGURE AND INDEX NUMBER	GROUP FLIGHT CONTROLS MAJOR ASSEMBLY AILERON CONTROLS PART NUMBER	1 2 3 4 5 6 7 NOMENCLATURE	EFFEC-TIVITY	UNITS PER ASSY
2-7-8	41A-90103-4	...INSERT - FLIGHT CONTROL ROD		1
-33	MS24692-138	...PIN		6
-34	ST4BR	..ROD END - (V77896)		1
	NAS509-6	..NUT		1
	41A-90099-46	.ROD ASSY - WS 60-105 CONTROL (REAR)		1
-35	41A-90099-246	..ROD - WS 60-105 CONTROL (REAR)		1
	41A-90421	..END FITTING ASSY - AILERON CONTROL		2
-36	41A-90421-2	...END FITTING - AILERON CONTROL		1
-37	BR4H	...BEARING - (V77896)		2
-38	MS24692-111	..PIN		6
	41A-90099-54	.ROD ASSY - WS 60-105 CONTROL (FWD)		1
-39	41A-90099-254	..ROD - WS 60-105 CONTROL		1
	41A-90421	..END FITTING ASSY - AILERON CONTROL		2
-40	41A-90421-2	...END FITTING - AILERON CONTROL		1
-41	BR4H	...BEARING - (V77896)		2
-42	MS24692-138	..PIN		6
	41A-90099-48	.ROD ASSY - WS 105-129 CONTROL (AFT)		1
	41A-90099-148	..ROD ASSY - WS 105-129 CONTROL		1
-43	41A-90099-248	...ROD - WS 105-129 CONTROL		1
-44	SPH4-10C1	...ROD END		1
	41A-90103	...INSERT - FLIGHT CONTROL ROD		1
-45	MS24692-111	...PIN		6
-46	41A-90439	..END FITTING - FLIGHT CONTROL		1
	NAS509-6	..NUT		1
	41A-90099-56	.ROD ASSY - WS 105-129 CTL (FORWARD)		1
	41A-90099-156	..ROD ASSY - WS 105-129 CONTROL		1
-47	41A-90099-256	...ROD - WS 105-129 CONTROL		1
-48	SPH4-10C1	...ROD END		1
	41A-90103	...INSERT - FLIGHT CONTROL ROD		1
-49	MS24692-132	...PIN		6
-50	41A-90439	..END FITTING - FLIGHT CONTROL		1
	NAS509-6	..NUT		1
-51	NAS6204-26D	.BOLT		1
-52	NAS6204-24D	.BOLT		1
-53	NAS6204-13D	.BOLT		4
-54	NAS6204-15D	.BOLT		8
	AN960PD416	.WASHER		14
	AN320-4	.NUT		14
	MS24665-132	.COTTER PIN		14
	41A-90662	.ROD ASSY - WING AILERON CONTROL		1
-55	41A-90664	..BARREL - WING AILERON CONTROL		1
-56	41A-90663	..END FITTING - WING AILERON CONTROL		1
	NAS509-5	..NUT		1
-57	ADNEL4J	..ROD END - (V83086)		1
	NAS509L5	..NUT		1
-58	41A-90651-84	.BOLT		1
	AN960PD10L	.WASHER		1
-59	NAS6204-16D	.BOLT		1
	AN960PD416	.WASHER		1
	AN320-4	.NUT		2
	MS24665-132	.COTTER PIN		2
	41A-90660-4	.ROD ASSY - AILERON CONTROL		1
-60	41A-90660-12	..BARREL - AILERON CONTROL ROD		1
-61	ADNE4JW	..ROD END - (V83086)		1
	NAS509-5	..NUT		1
-62	ADNEL4J	..ROD END - (V83086)		1
	NAS509L5	..NUT		1
-63	NAS6204-13D	.BOLT		1
-64	NAS6204-11D	.BOLT		1
	AN960PD416	.WASHER		2
	AN320-4	.NUT		2
	MS24665-132	.COTTER PIN		2
-65	41A-90415	BRACKET - FS 285 AIL CONTROL LH (SEE FIG. 2-7-2)		REF

FIGURE AND INDEX NUMBER	GROUP FLIGHT CONTROLS MAJOR ASSEMBLY AILERON CONTROLS PART NUMBER	1 2 3 4 5 6 7 NOMENCLATURE	EFFEC-TIVITY	UNITS PER ASSY
2-7-8 -66	41A-90436	BRACKET - FS 285 AIL CONTROL RH (SEE FIG. 2-7-2)		REF
-67	41A-90422	LEVER ASSY - FS 285 AIL CONTROL (SEE FIG. 2-7-2)		REF
-68	41A-90419	LEVER ASSY - FS 285 AIL CONTROL (SEE FIG. 2-7-2)		REF
-69	41A-90424	IDLER ASSY - FS 285 AIL CONTROL (SEE FIG. 2-7-2)		REF
		-000-		

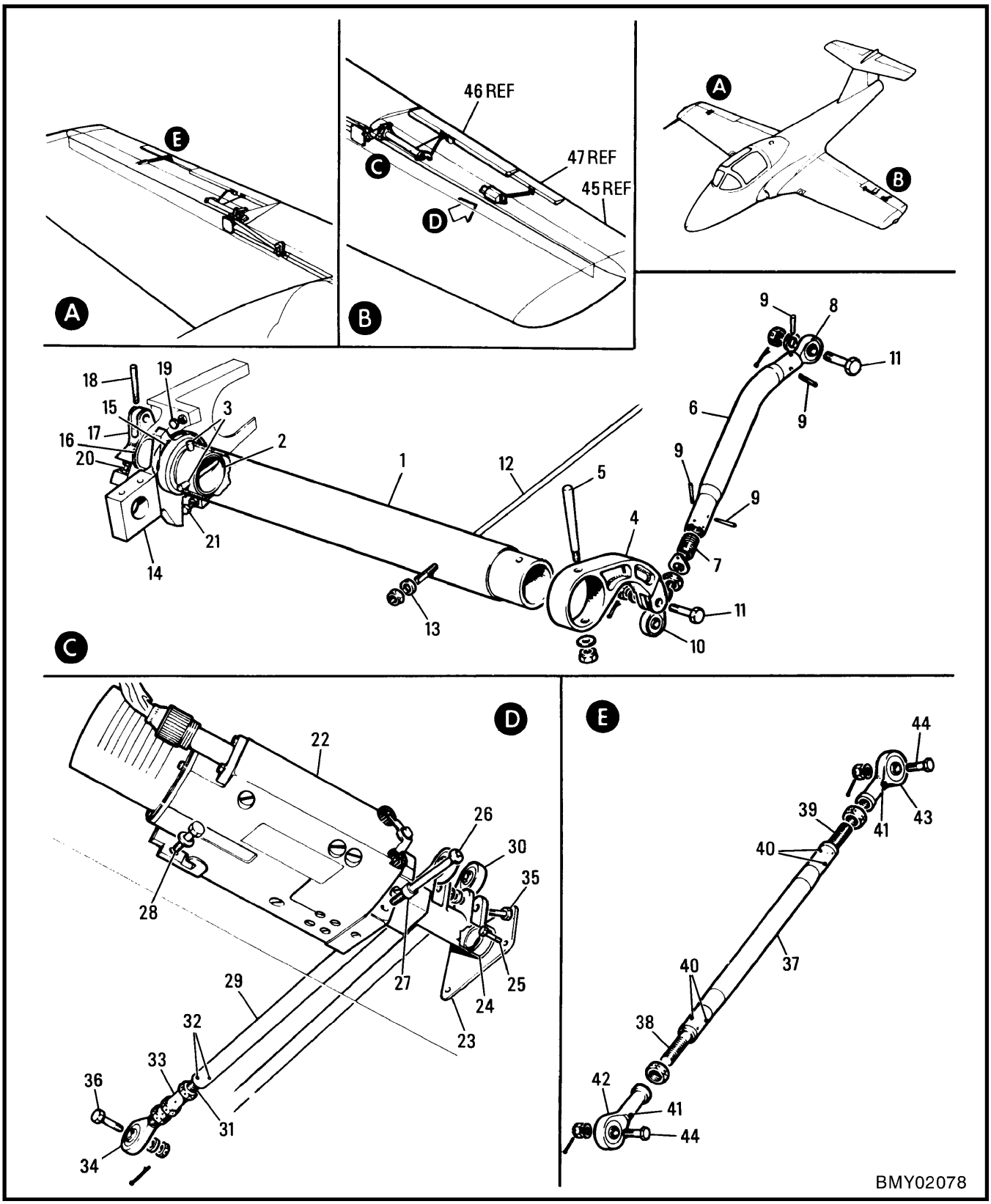

Figure 2-7-9 Aileron Tab Controls

FIGURE AND INDEX NUMBER	GROUP FLIGHT CONTROLS MAJOR ASSEMBLY AILERON TAB CONTROLS PART NUMBER	1 2 3 4 5 6 7 NOMENCLATURE	EFFEC-TIVITY	UNITS PER ASSY
2-7-9 -	41A-90701-800	TAB CONTROL INSTL - AILERON LH (SEE SECTION 1)		NP
	41A-90701-801	TAB CONTROL INSTL - AILERON RH		NP
	41A-90730	.TUBE ASSY - AILERON SPRING TAB TORQUE		1
- 1	41A-90730-2	..TUBE - AILERON SPRING TAB TORQUE		1
- 2	41A-90729	..END FITTING		1
- 3	S1224-3-16	..PIN - (V88308)		2
- 4	41A-90727	.LEVER - AILERON SPRING TAB		1
- 5	AN386-2-16A	.PIN		1
	AN975-3	.WASHER		1
	MS21083N3	.NUT		1
	41A-90725-12	.ROD ASSY - AILERON SPRING TAB		1
- 6	41A-90725-16	..ROD ASSY - AILERON SPRING TAB		1
	41A-90725-14	...ROD - AILERON SPRING TAB		1
- 7	41A-90725-6	...INSERT - AILERON SPRING TAB ROD		1
- 8	MS21152-1	...ROD END		1
- 9	AN385-30-7	...PIN		4
-10	41A-90726	..END FITTING		1
	NAS513-5	..WASHER		1
	NAS509-5	..NUT		1
-11	NAS1103-10D	.BOLT		2
	AN960PD10	.WASHER		2
	AN320-3	.NUT		2
	MS24665-132	.COTTER PIN		2
-12	41A-90732	.ROD - SPRING		1
-13	S1324-3-13	.WASHER - (V88308)		1
	MS21083N3	.NUT		1
	41A-90712	.HOUSING ASSY - INBD AILERON HINGE BEARING		1
-14	41A-90712-2	..HOUSING - INBOARD AILERON HINGE BEARING		1
-15	KP16BS	..BEARING - (V21335)		1
-16	S1236-1216	.WASHER - (V88308)		AR
-17	41A-90731	.LEVER - AILERON SPRING TAB		1
-18	AN386-1-12A	.PIN		1
	AN975-3	.WASHER		1
	MS21083N3	.NUT		1
-19	NAS428H3-7	.BOLT - (ADJUSTMENT)		2
	MS35650-302	.NUT (IAW 41A-90701)		2
-20	NAS428KH4-10	.BOLT - (ADJUSTMENT)		1
-21	NAS428KH4-6	.BOLT - (ADJUSTMENT)		1
	NAS509-4	.NUT		2
	41A-90717	.ACTUATOR INSTL - AILERONTRIM TAB (PORT)		NP
-22	R422M22-3	..ACTUATOR ASSY - (V36123) (AILERON TRIM TAB) (IAW 41A-90702-22) FOR BRKDN SEE C-17-695-000/MS-000		1
	41A-90722	..BEARING ASSY - AILERON TRIM ACTUATOR		1
-23	41A-90722-2	...HOUSING - TRIM ACTUATOR BEARING		1
-24	AA6344	...BEARING - (V70417)		1
-25	NAS1103-4	..BOLT		4
-26	41A-90717-2	..SCREW		2
-27	NAS43DD4-7	..SPACER		2
-28	AN4-4A	..SCREW		2
	AN960PD416	..WASHER		2
	41A-90718	..ROD ASSY - AILERON TRIM TAB		2
-29	41A-90718-2	...ROD - AILERON TRIM TAB		1
-30	41A-90720	...ROD END ASSY - AILERON TRIM TAB		1
	41A-90720-2	....ROD END - AILERON TRIM TAB		1
	HSBG3	....BEARING - (V97613)		1
-31	41A-90721	...ROD END - AILERON TRIM TAB		1
-32	MS24692-105	...PIN		4
-33	41A-90719	...BARREL - AILERON TRIM TAB ROD		1
	NAS509-6	...NUT		1
-34	HRBML3EFN	...ROD END - (V97613)		1
	NAS509L5	...NUT		1
-35	NAS1103-7D	..BOLT		2
-36	NAS1103-11D	..BOLT		2

FIGURE AND INDEX NUMBER	GROUP FLIGHT CONTROLS MAJOR ASSEMBLY AILERON TAB CONTROLS PART NUMBER	1 2 3 4 5 6 7 NOMENCLATURE	EFFEC-TIVITY	UNITS PER ASSY
2-7-9	AN960PD10	..WASHER		4
	AN320-3	..NUT		4
	MS24665-151	..COTTER PIN		4
	41A-90707	ROD INSTL - GEAR TAB CONTROL (STBD) (SEE SECTION 1)		NP
	41A-90602	.ROD ASSY - AILERON GEAR TAB		2
-37	41A-90602-14	..ROD - AILERON GEAR TAB		1
-38	41A-90602-26	..ROD END - AILERON GEAR TAB		1
-39	41A-90602-28	..ROD END - AILERON GEAR TAB		1
-40	MS24692-102	..PIN		4
	NAS509-4	..NUT		1
	NAS509L4	..NUT		1
-41	MS9048-036	..PIN		2
-42	41A-90602-6	..END FITTING		1
-43	41A-90602-8	..END FITTING		1
-44	NAS1103-11D	.BOLT		4
	AN960-10L	.WASHER		4
	AN320-3	.NUT		4
	MS24665-134	.COTTER PIN		4
-45	41A-13102	AILERON ASSY - (SEE SECTION 1)		REF
-46	41A-13103	SPRING TAB ASSY - (SEE SECTION 1)		REF
-47	41A-13104	AILERON TRIM TAB ASSY - (SEE SECTION 1)		REF
		-000-		

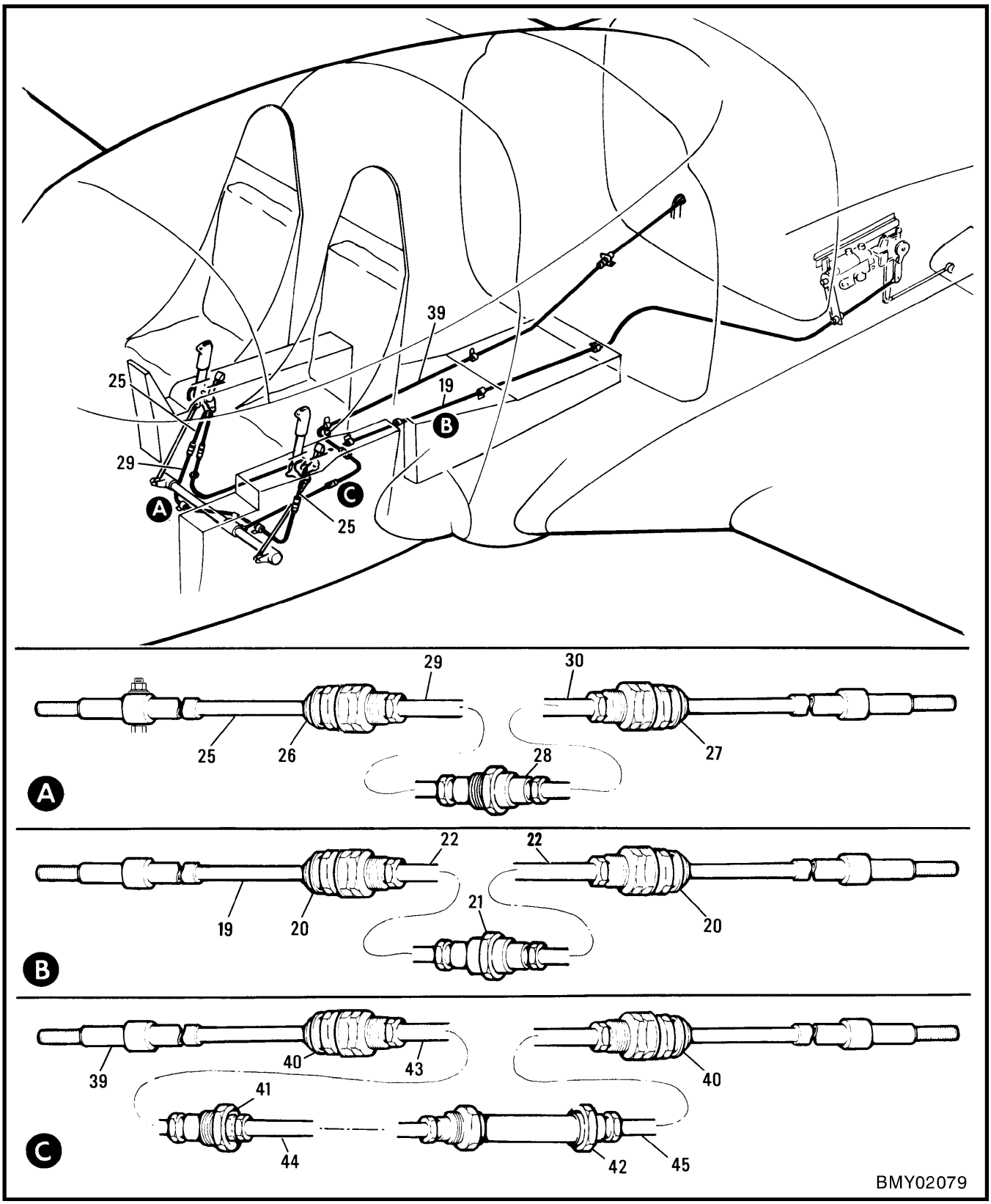

Figure 2-7-10 (Sheet 1 of 2) Power & Flap Controls

FIGURE AND INDEX NUMBER	GROUP FLIGHT CONTROLS MAJOR ASSEMBLY POWER & FLAP CONTROLS PART NUMBER	1 2 3 4 5 6 7 NOMENCLATURE	EFFEC-TIVITY	UNITS PER ASSY
2-7-10 -	41A-90751	POWER & FLAP CONTROL INSTL -(SEE SECTION 3)		NP
	41A-90752	.BOX INSTL - POWER & FLAP (SEE FIG. 2-7-11 & FIG. 2-7-12)		REF
	41A-90785	.LEVER INSTL - CENTRE CONSOLE POWER & FLAP (SEE FIG. 2-7-12)		REF
- 1	41A-90780	.TUBE - POWER CONTROL INTERCONNECT		1
- 2	41A-90777-4	.LEVER - POWER CONTROL		1
- 3	41A-90776	.LEVER - POWER CONTROL		1
- 4	AN386-1-13A	.PIN		4
	AN975-3	.WASHER		4
	MS21042L3	.NUT		4
	41A-90779	.BEARING ASSY - END		1
- 5	41A-90779-2	..HOUSING - END BEARING		1
- 6	B542DD	..BEARING - (V21335)		1
	41A-90778-4	.BEARING ASSY - POWER CONTROL		1
- 7	41A-90778-2	..HOUSING - POWER CONTROL BEARING		1
- 8	B542DD	..BEARING - (V21335)		1
- 9	NAS623-3-2	.SCREW		8
-10	NAS1203-6	.BOLT		4
	AN960PD10	.WASHER		12
	MS21042L3	.NUT		12
-11	NAS428KH4-12	.BOLT - (ADJUSTER ON 41A-90778)		1
	NAS509-4	.NUT		1
-12	41A-90777-6	.LEVER - POWER CONTROL		1
	41A-90781	.ROD ASSY - POWER CONTROL		2
	41A-90781-2	..ROD ASSY - POWER CONTROL		1
-13	41A-90781-4	...ROD - POWER CONTROL		1
-14	AN490HT8P	...ROD END		1
-15	AN948RE3H5	...ROD END		1
	AN385-30-6	...PIN		4
-16	AR3-4	..ROD END - (V77896)		1
	NAS509-4	..NUT		1
-17	NAS1103-11D	.BOLT		2
-18	NAS1103-12D	.BOLT		2
	AN960PD10	.WASHER		4
	AN320-3	.NUT		4
	MS24665-134	.COTTER PIN		4
-19	40252-2	.PUSH PULL UNIT - (V78710) (FLAP CONTROL) (IAW 41A-90784-2)		1
-20	21428-22	..TELESCOPIC UNIT - (V78710) (FLAP CONTROL)		2
-21	15489-3	..CONNECTOR - (V78710) (FLAP CONTROL CONDUIT)		1
-22	21430	..CONDUIT - (V78710) (FLAP CONTROL CABLE)		1
-23	21431	..CONDUIT - (V78710) (FLAP CONTROL CABLE)		1
	12164-1424	..CABLE - (V78710) (FLAP CONTROL)		1
-24	MS35489-10	.GROMMET		1
-25	40252-4	.PUSH PULL UNIT - (V78710) (FLAP CONTROL) (IAW 41A-90784-4)		1
	5034	..PLUG/BOLT (V78710)		1
	NAS1149C063R	..WASHER (V78710)		1
	5511-2	..NUT (V78710)		1
-26	21428-22	..TELESCOPIC UNIT - (V78710) (FLAP CONTROL)		1
-27	21428-16	..TELESCOPIC UNIT - (V78710) (FLAP CONTROL)		1
-28	15489-3	..CONNECTOR - (V78710) (FLAP CONTROL CONDUIT)		1
-29	21429	..CONDUIT - (V78710) (FLAP CONTROL CABLE)		1
-30	21861	..CONDUIT - (V78710) (FLAP CONTROL CABLE)		1
	12164-511	..CABLE - (V78710) (FLAP CONTROL)		1

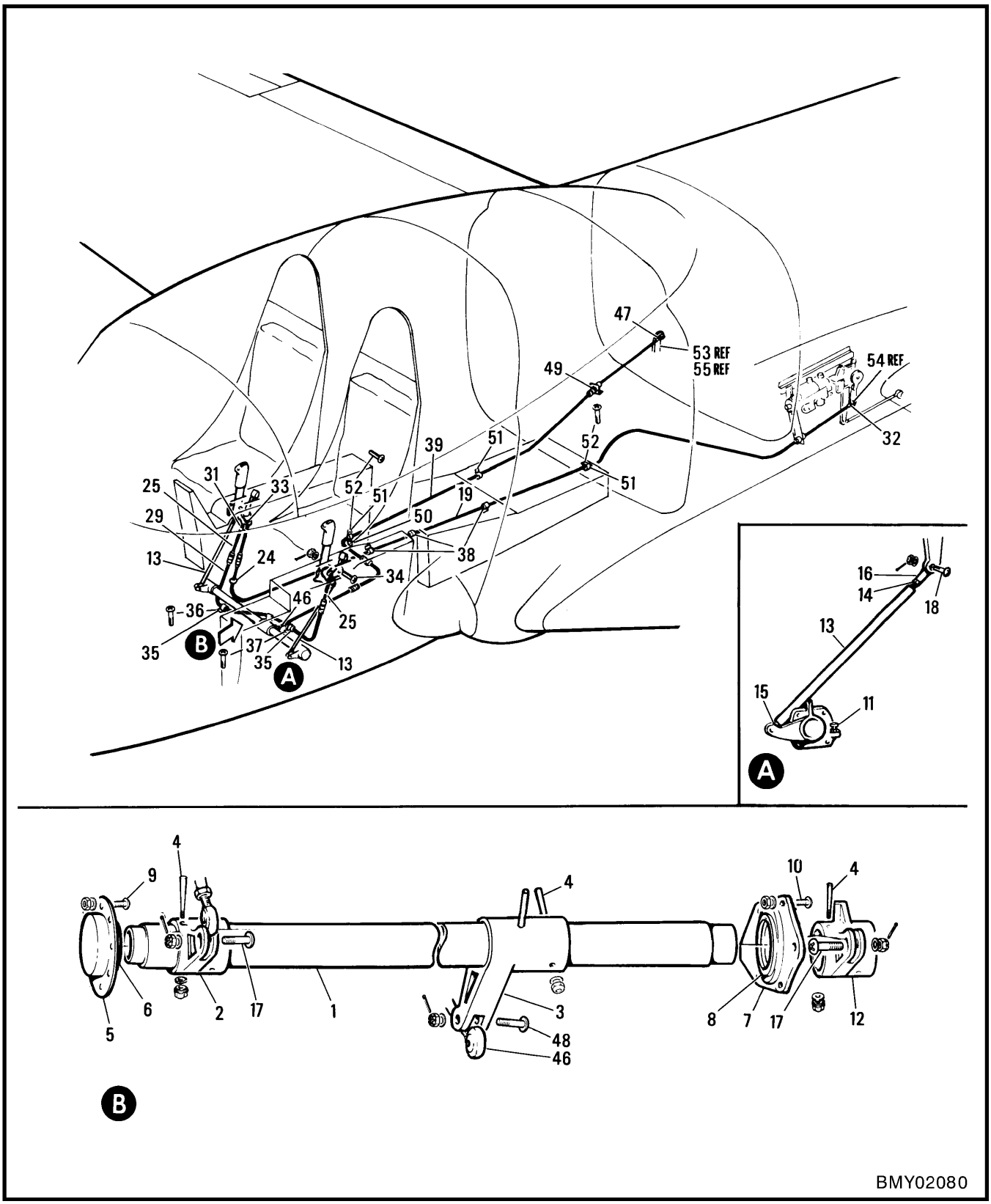

Figure 2-7-10 (Sheet 2 of 2) Power & Flap Controls

FIGURE AND INDEX NUMBER	GROUP FLIGHT CONTROLS MAJOR ASSEMBLY POWER & FLAP CONTROLS PART NUMBER	1 2 3 4 5 6 7 NOMENCLATURE	EFFEC-TIVITY	UNITS PER ASSY
2-7-10 -31	AR3-4	.ROD END - (V77896)		3
-32	RF4-4	.ROD END - (V77896)		3
	NAS509-4	.NUT		4
-33	NAS1103-15D	.BOLT - (PUSH PULL UNIT TO RH FLAP LEVER)		2
-34	NAS1103-11D	.BOLT - (PUSH PULL UNIT TO LH FLAP LEVER)		1
	AN960PD10	.WASHER		3
	AN320-3	.NUT		3
	MS24665-134	.COTTER PIN		3
-35	316-5-8	.CLIP - (V00502)		2
-36	NAS623-3-11	.SCREW		1
	NAS43DD3-36	.SPACER		1
-37	NAS623-3-4	.SCREW		1
	AN960PD10	.WASHER		3
	MS21042L3	.NUT		2
-38	316-5-8	.CLIP - (V00502) (FOR ATT SCREWS SEE HYD LINES)		3
	NAS43DD3-58	.SPACER - (FS 224)		1
	NAS43DD3-13	.SPACER - (FS 238)		1
	AN960PD10	.WASHER		3
-39	40250	.PUSH PULL UNIT - (V78710) (POWER CONTROL) (IAW 41A-90783-800)		1
-40	21505-44	..TELESCOPIC UNIT - (V78710) (POWER CONTROL)		2
-41	15571-1	..CONNECTOR - (V78710) (POWER CONTROL CONDUIT)		1
-42	21434-1	..CONNECTOR - (V78710) (POWER CONTROL CONDUIT)		1
-43	21432	..CONDUIT - (V78710) (POWER CONTROL CABLE)		1
-44	21433	..CONDUIT - (V78710) (POWER CONTROL CABLE)		1
-45	21862	..CONDUIT - (V78710) (POWER CONTROL CABLE)		1
	12164-1311	..CABLE - (V78710) (POWER CONTROL)		1
-46	AR3-4	.ROD END - (V77896)		1
-47	RF4-4	.ROD END - (V77896)		1
	NAS509-4	.NUT		2
-48	NAS1103-11D	.BOLT		1
	AN960PD10	.WASHER		1
	AN320-3	.NUT		1
	MS24665-134	.COTTER PIN		1
-49	41A-90751-56	.ANGLE - TELESCOPIC UNIT LOCKING (FIREWALL POWER CONTROL BOX)		1
-50	41A-90790	.PLATE - POWER CONTROL MOUNTING		1
-51	316-5-8	.CLIP - (V00502)		3
-52	NAS623-3-4	.SCREW		2
	AN960PD10	.WASHER		2
	AN960PD8	.WASHER		1
	MS21042L3	.NUT		2
-53	41A-90773-10	LEVER - POWER CONTROL (SEE SECTION 5)		REF
-54	NAS6204-24D	BOLT - (PUSH PULL CONN) (SEE FIG. 2-7-13)		REF
-55	NAS6204-13D	BOLT - (SEE SECTION 5)		REF
		-000-		

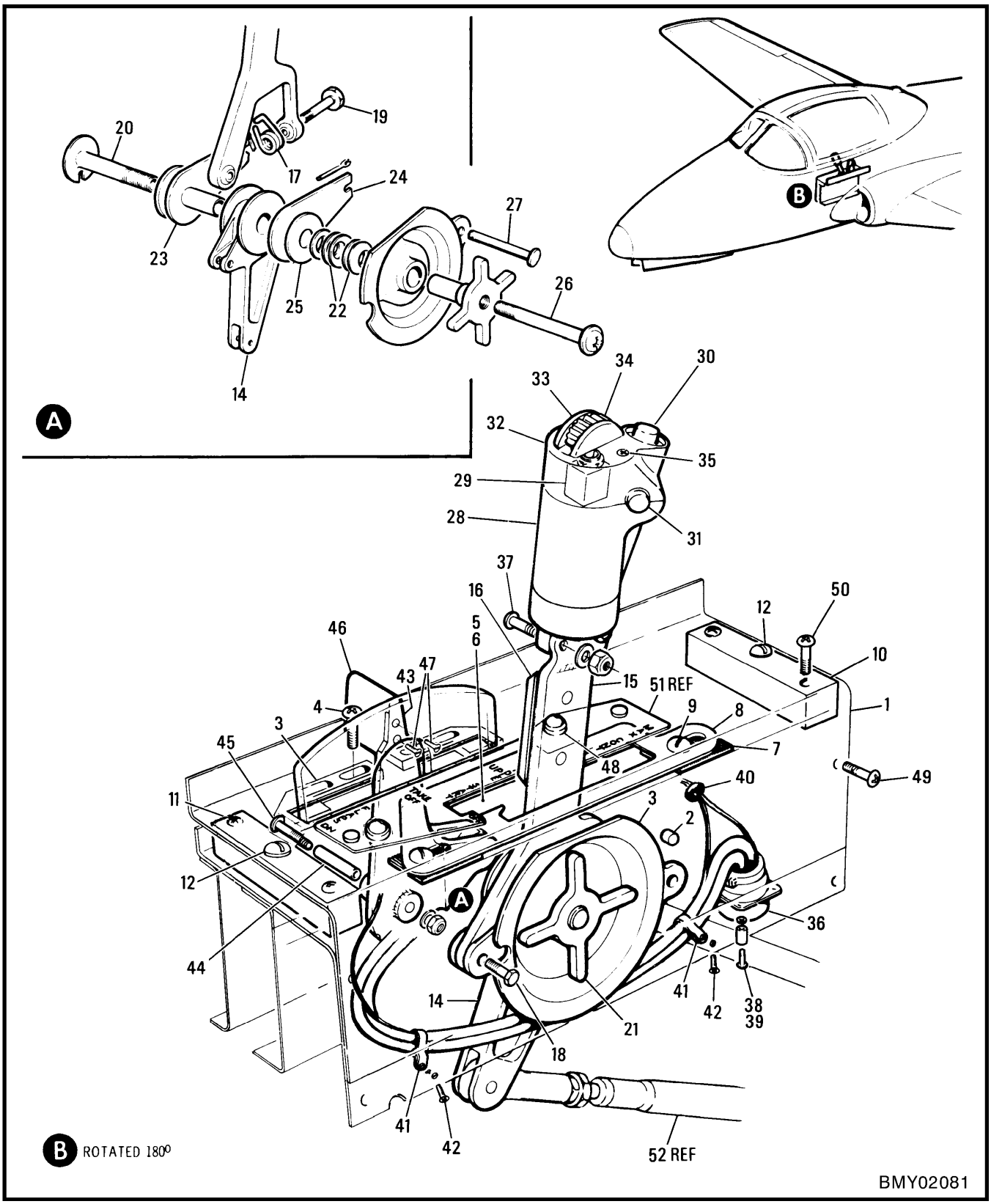

Figure 2-7-11 Power & Flap Control Box

FIGURE AND INDEX NUMBER	GROUP FLIGHT CONTROLS MAJOR ASSEMBLY POWER & FLAP CONTROL BOX PART NUMBER	1 2 3 4 5 6 7 NOMENCLATURE	EFFEC-TIVITY	UNITS PER ASSY
2-7-11 -	41A-90752-804	CONTROL BOX INSTL - POWER & FLAP (SEE FIG. 2-7-10)		NP
	41A-90752-86	.CONTROL BOX ASSY - POWER & FLAP		1
- 1	41A-90765-802	..CONTROL BOX ASSY		1
- 2	41A-90772	...SPIGOT - THROTTLE CONTROL		1
- 3	41A-90765-62	...PLATE - FLAP CONTROL LEVER STOP		2
- 4	MS27039-1-09	...SCREW		4
- 5	41A-90765-76	...PAD - (POWER CONTROL)		1
- 6	41A-90765-78	...PAD - (POWER CONTROL)		1
- 7	41A-90765-26	...PLATE - SERRATED		2
- 8	41A-90765-70	...PLATE - GUIDE		1
- 9	MS27039-1-09	...SCREW		2
-10	41A-90765-22	...SPACER - (CONTROL BOX)		1
-11	41A-90765-24	...SPACER - (CONTROL BOX)		1
-12	MS27039-1-06	...SCREW		2
-13	41A-90756	..DISC - THROTTLE CONTROL BEARING		1
	NAS623-3-2	.SCREW		2
	41A-90752-15	.LEVER ASSY - POWER CONTROL		1
	41A-90767	..LEVER ASSY		1
-14	41A-90767-2	...LEVER		1
	AA521	...BUSHING - (VK7182)		1
	41A-90752-84	..LEVER ASSY		1
	41A-90766-6	...LEVER ASSY		1
-15	41A-90766-8	....LEVER		1
	ADB4V	....BEARING - (V83086)		2
-16	NO NUMBER	...COVER - CABLE (IAW C-12-114-000/CF-460)		1
-17	41A-90762-2	..SPRING		1
-18	NAS1204-12D	..BOLT		1
	AN960PD416L	..WASHER		1
	AN320-4	..NUT		1
	MS24665-151	..COTTER PIN		1
-19	NAS6204-16	..BOLT		1
	NAS561P2-16	..PIN		1
-20	41A-90758	.SHAFT - THROTTLE CONTROL		1
-21	41A-90757	.HANDLE - THROTTLE DAMPER		1
-22	1000-35	.WASHER - (V92830) (PLATED)		4
	AN960-816L	.WASHER		AR
-23	41A-90755-2	.WASHER		1
-24	41A-90755-4	.WASHER		1
-25	S1246-32-52-032	.WASHER - (V88308)		1
-26	MS27039-1-32	.SCREW		1
	AN960PD10L	.WASHER		1
	AN320-3	.NUT		1
	MS24665-149	.COTTER PIN		1
-27	MS20392-2C55	.PIN		1
	MS24665-149	.COTTER PIN		1
	41A-90752-52	.GRIP ASSY - (POWER CONTROL)		1
	KY925	..GRIP ASSY - (V80477)		1
-28	KY246	...BASE ASSY - (V80477)		1
-29	13AT2	...SWITCH - (V94580) (SPEEDBRAKE)		1
	KJ126	...WASHER - (V80477)		1
-30	MS25089-4B	...SWITCH - (AIR START)		1
	RR75C	...LOCK RING - (V80477)		1
-31	MS25089-4B	...SWITCH - (MICROPHONE)		1
-32	KV144	...COVER - (V80477)		1
-33	KC106-500	...BUTTON HOUSING		1
	AN530-2-6	...SCREW		2
-34	KZ147	...BUTTON - (V80477)		1
	AN565A4-3	...SETSCREW		1
-35	MS35206-220	...SCREW		2
-36	PT00SE14-19P	..RECEPTACLE - (V77820)		1
	S1244B9-5-1/4	..CONDUIT - (V88308)		1
-37	NAS623-4-9	.SCREW - (GRIP RETAINING)		2
	AN960PD416L	.WASHER		2

FIGURE AND INDEX NUMBER	GROUP FLIGHT CONTROLS MAJOR ASSEMBLY POWER & FLAP CONTROL BOX PART NUMBER	1 2 3 4 5 6 7 NOMENCLATURE	EFFEC-TIVITY	UNITS PER ASSY
2-7-11	MS21083N4	.NUT		2
-38	MS35206-219	.SCREW - (RECEPTACLE RETAINING)		4
-39	NAS43DD0-24	.SPACER		4
	AN960PD4	.WASHER		4
-40	MS35489-1	.GROMMET		1
-41	443E4-2-6	.CLIP - (V00502)		2
-42	MS24693S49	.SCREW		2
	41A-90759	.LEVER ASSY - FLAP		1
-43	41A-90759-2	..LEVER - FLAP		1
	AA401-1	..BUSHING - (V88821)		1
-44	41A-90761	.SHAFT - FLAP CONTROL		1
-45	NAS1103-19D	.BOLT		1
	AN960PD10L	.WASHER		1
	AN320-3	.NUT		1
	MS24665-149	.COTTER PIN		1
-46	41A-90760	.HANDLE - FLAP LEVER		1
-47	MS24693S28	.SCREW		2
-48	A7165-1-327	.LIGHT ASSY - (V72914)		2
-49	NAS623-3-3	.SCREW		4
-50	NAS623-3-7	.SCREW		4
-51	41A-50728	PANEL - EDGELIT (SEE SECTION 12)		REF
-52	41A-90781	ROD ASSY - POWER CONTROL (SEE FIG. 2-7-10)		REF
		-000-		

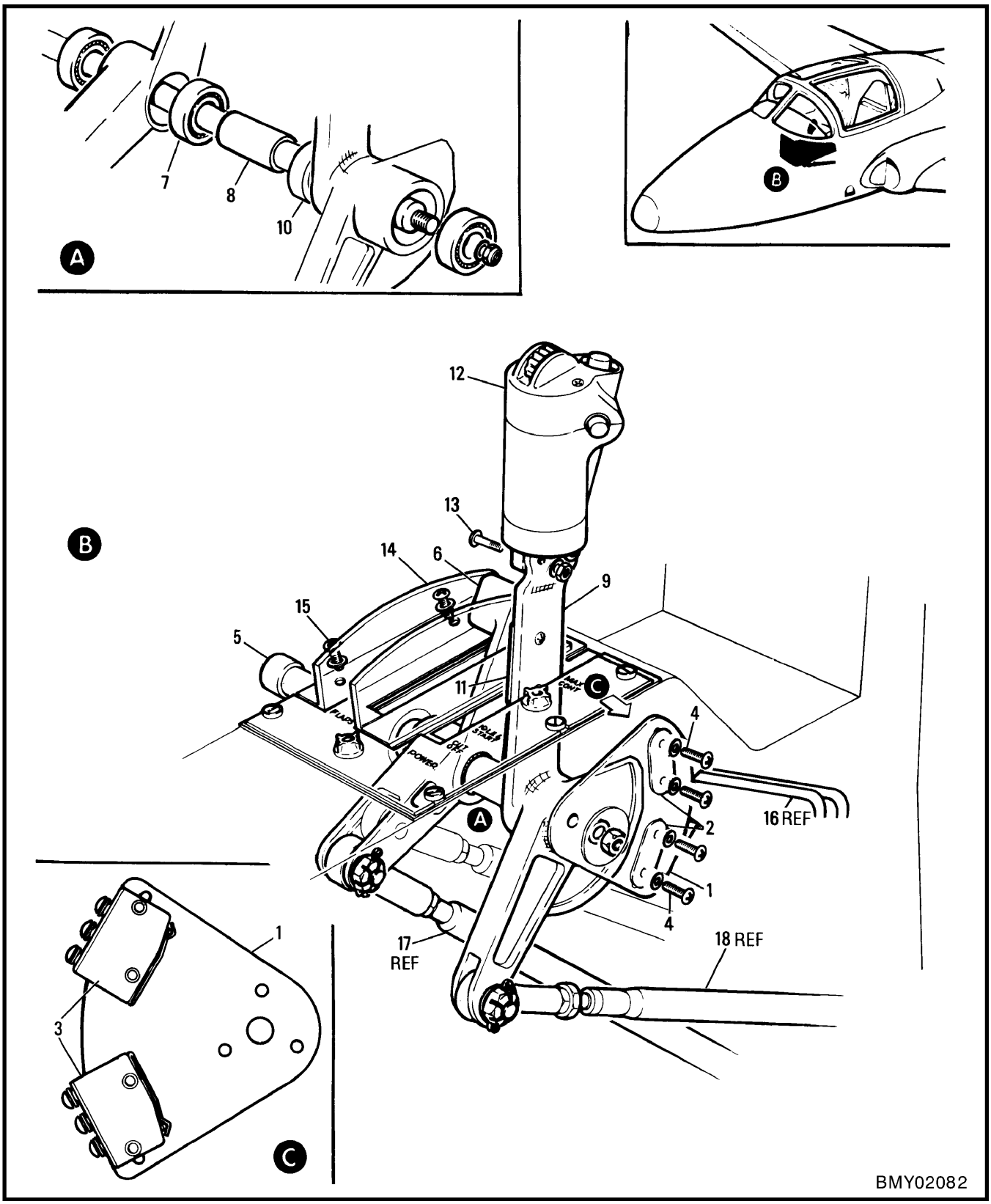

Figure 2-7-12 Centre Console Power & Flap Levers

FIGURE AND INDEX NUMBER	GROUP FLIGHT CONTROLS MAJOR ASSEMBLY CENTRE CONSOLE POWER & FLAP LEVERS PART NUMBER	1 2 3 4 5 6 7 NOMENCLATURE	EFFEC-TIVITY	UNITS PER ASSY
2-7-12 -	41A-90785	LEVER INSTL - CENTRE CONSOLE POWER & FLAP (SEE FIG. 2-7-10)		NP
- 1	41A-90786-4	.PLATE - SWITCH MOUNTING		1
- 2	41A-90786-10	.PLATE ASSY - SWITCH MOUNTING		2
- 3	MS24456-1	.SWITCH - (RETARD & ADVANCE THROTTLE) (S3J)		2
- 4	MS35206-219	.SCREW		4
	AN960PD4L	.WASHER		4
- 5	41A-90771	.SHAFT - THROTTLE & FLAP CONTROL		1
	41A-90770-6	.LEVER ASSY - FLAP CONTROL		1
- 6	41A-90770-8	..LEVER - FLAP CONTROL		1
- 7	B538DD	..BEARING - (V21335)		2
- 8	NAS43DD10-87	.SPACER		1
	41A-90785-2	.LEVER ASSY - POWER CONTROL		1
	41A-90769	..LEVER ASSY - POWER CONTROL		1
		OR		
	41A-90769-800	..LEVER ASSY - POWER CONTROL		
- 9	41A-90769-6	...LEVER		1
-10	B538DD	...BEARING - (V21335)		2
-11	41A-90782	..COVER - CABLE		1
	AN960PD416L	.WASHER - (ON SHAFT)		1
	MS21083N4	.NUT		1
	41A-90785-6	.GRIP ASSY - POWER CONTROL		1
-12	KY925	..GRIP ASSY - (V80477) (FOR BRKDN SEE FIG. 2-7-11)		1
	S1244F9-3	..CONDUIT - (V88308)		1
-13	NAS623-4-11	.SCREW		2
	AN960PD416L	.WASHER		2
	MS21083N4	.NUT		2
-14	41A-90768-8	.GUARD - LH		1
	41A-90768-9	.GUARD - RH		1
-15	MS35214-27	.SCREW		4
	S1426-6	.WASHER - (V88308)		4
-16	41A-90785-4	.HARNESS ASSY - (SEE SECTION 12)		REF
-17	40252-2	PUSH PULL UNIT - (FLAP CONTROL) (SEE FIG. 2-7-10)		REF
-18	41A-90781	ROD ASSY - POWER CONTROL (SEE FIG. 2-7-10)		REF
		-000-		

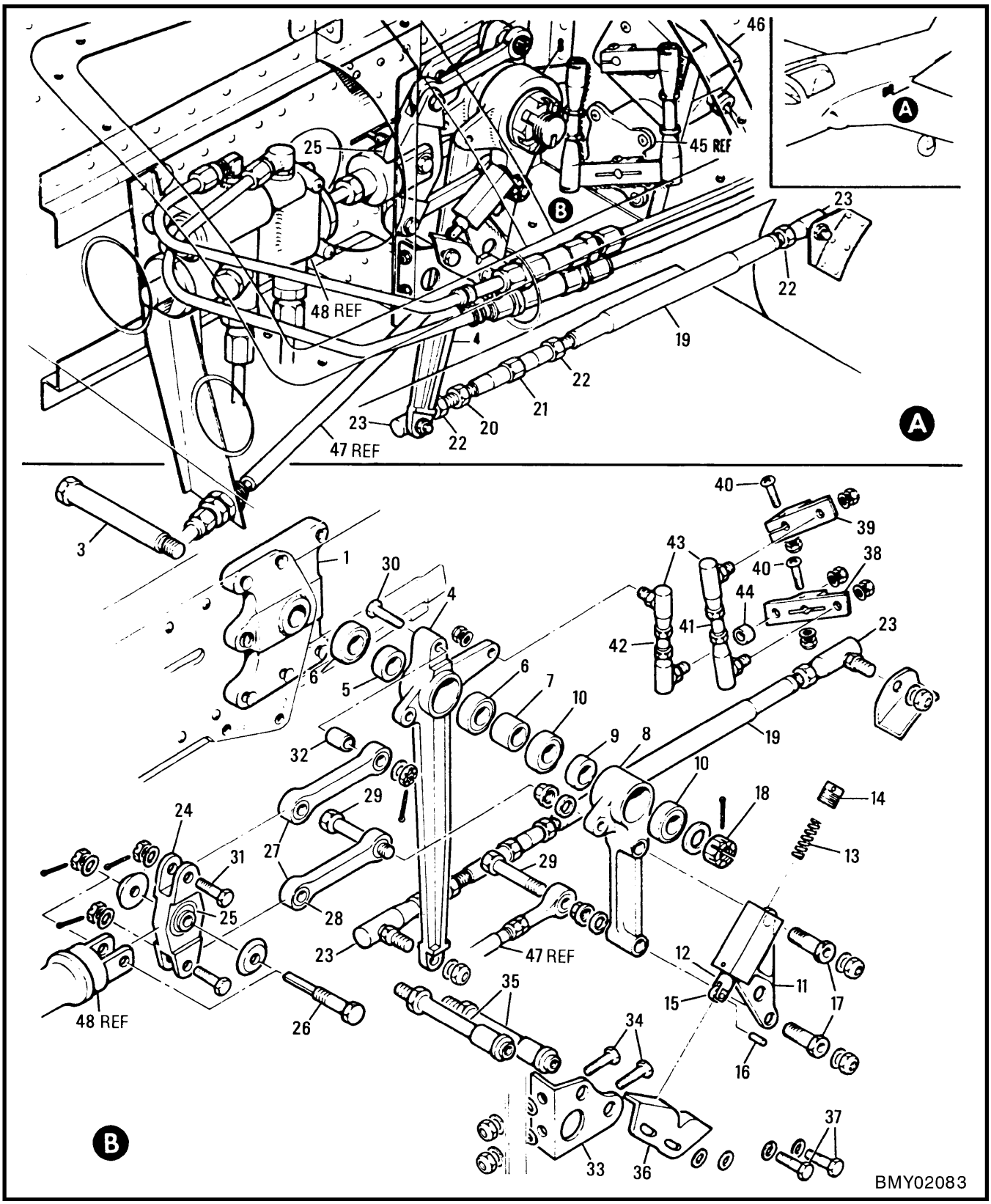

Figure 2-7-13 Flap Follow Up System Mechanism

FIGURE AND INDEX NUMBER	GROUP FLIGHT CONTROLS MAJOR ASSEMBLY FLAP FOLLOW UP SYSTEM MECHANISM PART NUMBER	1 2 3 4 5 6 7 NOMENCLATURE	EFFEC-TIVITY	UNITS PER ASSY
2-7-13 -	41A-35160	FAIRING INSTL - FUSELAGE TO WING LH (SEE SECTION 3)		REF
- 1	41A-90874-2	.MOUNTING - FLAP CONTROL SHAFT (RIVETED)		1
- 2		DELETED		
	41A-90851	FOLLOW UP SYS MECH INSTL - FLAP (SEE SECTION 3)		NP
- 3	41A-90853-100	.SHAFT - FLAP FOLLOW UP LEVER		1
	41A-90856-6	.LEVER ASSY		1
- 4	41A-90856-8	..LEVER		1
- 5	41A-90430-42	..SPACER - (BETWEEN BEARINGS)		1
- 6	B538DD	..BEARING - (V21335)		2
- 7	41A-90430-44	.SPACER - (BETWEEN LEVERS)		1
	41A-90886	.LEVER ASSY - FLAP CONTROL		1
	41A-90857-6	..LEVER ASSY - FLAP FOLLOW UP		1
- 8	41A-90857-8	...LEVER - FLAP FOLLOW UP		1
- 9	41A-90430-42	...SPACER - (BETWEEN BEAR INGS)		1
-10	B538DD	...BEARING - (V21335)		2
-11	41A-90880	..HOUSING - FLAP CONTROL		1
-12	41A-90877	..FORK END - FLAP CONTROL		1
	NAS561-2-11	..PIN		1
-13	41A-90875	..SPRING - COMPRESSION (FLAP CONTROL)		1
-14	41A-90883	..PLUG - FLAP CONTROL THREADED		1
-15	41A-90879	..ROLLER - FLAP CONTROL		1
-16	41A-90886-10	..ROD - DRILL		1
-17	41A-90881	..BOLT - FLAP CONTROL SPECIAL		2
	AN960PD616L	..WASHER		2
	MS21042L6	..NUT		2
	AN960PD816	.WASHER - (ON SHAFT)		1
-18	AN320-8	.NUT		1
	MS24665-287	.COTTER PIN		1
	41A-90862-802	.ROD ASSY - FLAP FOLLOW UP		1
-19	41A-90862-12	..ROD ASSY - FLAP FOLLOW UP		1
-20	41A-90862-14	..TURNBUCKLE		1
-21	41A-90862-16	..TURNBUCKLE		1
-22	AN316-4R	..NUT		3
-23	AN276-6	..JOINT ASSY		2
	AN960PD416	.WASHER - (SOCKET BOLTS)		2
	MS21042L4	.NUT		2
	41A-90858	.LEVER ASSY - FLAP FOLLOW UP VALVE		1
-24	41A-90858-2	..LEVER - FLAP FOLLOW UP VALVE		1
-25	MS20207DPP4	..BEARING		1
-26	41A-90878	.BOLT - FLAP CONTROL SPECIAL		1
	AN960PD416	.WASHER		1
	AN320-4	.NUT		1
	MS24665-134	.COTTER PIN		1
	41A-90876	.LINK ASSY - FLAP CONTROL		2
-27	41A-90876-2	..LINK - FLAP CONTROL		1
-28	KWB4N	..BEARING - (V97613)		2
		OR		
	KWB4N3	..BEARING - (V97613)		
-29	NAS6204-24D	.BOLT		2
-30	NAS6204-20D	.BOLT		1
-31	NAS6204-11D	.BOLT		2
-32	NAS43DD4-19	.SPACER		1
	AN960PD416	.WASHER		5
	AN320-4	.NUT		5
	MS24665-134	.COTTER PIN		5
-33	41A-90885	.MOUNTING - FLAP CONTROL DETENT		1
-34	AN3-5	.BOLT		2
	S1246LS12-12-063	.WASHER - (V88308)		AR
	AN960PD10	.WASHER		2
	MS21042L3	.NUT		2
-35	41A-90882	.STUD - FLAP CONTROL DETENT MOUNTING		2
-36	41A-90884	.DETENT - FLAP CONTROL		1
-37	AN4-5	.BOLT		2

FIGURE AND INDEX NUMBER	GROUP FLIGHT CONTROLS MAJOR ASSEMBLY FLAP FOLLOW UP SYSTEM MECHANISM PART NUMBER	1 2 3 4 5 6 7 NOMENCLATURE	EFFEC-TIVITY	UNITS PER ASSY
2-7-13	AN960PD416L	.WASHER		2
	MS35338-44	.LOCK WASHER		2
-38	41A-90873	.LEVER - FLAP POSITION TRANSMITTER		1
-39	41A-90861	.LEVER - FLAP POSITION TRANSMITTER (STALL WARNING)		1
-40	AN3-10A	.BOLT - (LEVERS TO TRANSMITTERS)		2
	NAS43DD4-16	.SPACER		2
	AN960PD10	.WASHER		2
	MS21042L3	.NUT		2
	41A-90859	.ROD ASSY - FLAP POSITION XMTR CONTROL		1
	41A-90859-800	.ROD ASSY - FLAP POSITION XMTR CONTROL		1
-41	41A-90859-2	..ROD - FLAP POSITION XMTR CONTROL		1
-42	41A-90859-8	..ROD - (REQUIRED ON 41A-90859-800)		1
-43	AN276-6	..JOINT ASSY		2
	AN316-4R	..NUT		2
-44	NAS43DD4-12	.SPACER		1
	AN960PD416L	.WASHER		1
	AN960PD416	.WASHER - (ON SOCKET)		4
	MS21042L4	.NUT		4
-45	MIL-T-5583A	TRANSMITTER - FOLLOW UP (SEE SECTION 14)		REF
-46	C75509	TRANSMITTER - (STALL WARNING POSITION) (SEE SECTION 12)		REF
-47	40252-2	PUSH PULL UNIT - (FLAP CONTROL) (SEE FIG. 2-7-10)		REF
-48	3293000-1	VALVE ASSY - (FLAP CONTROL) (SEE SECTION 8)		REF
		-000-		

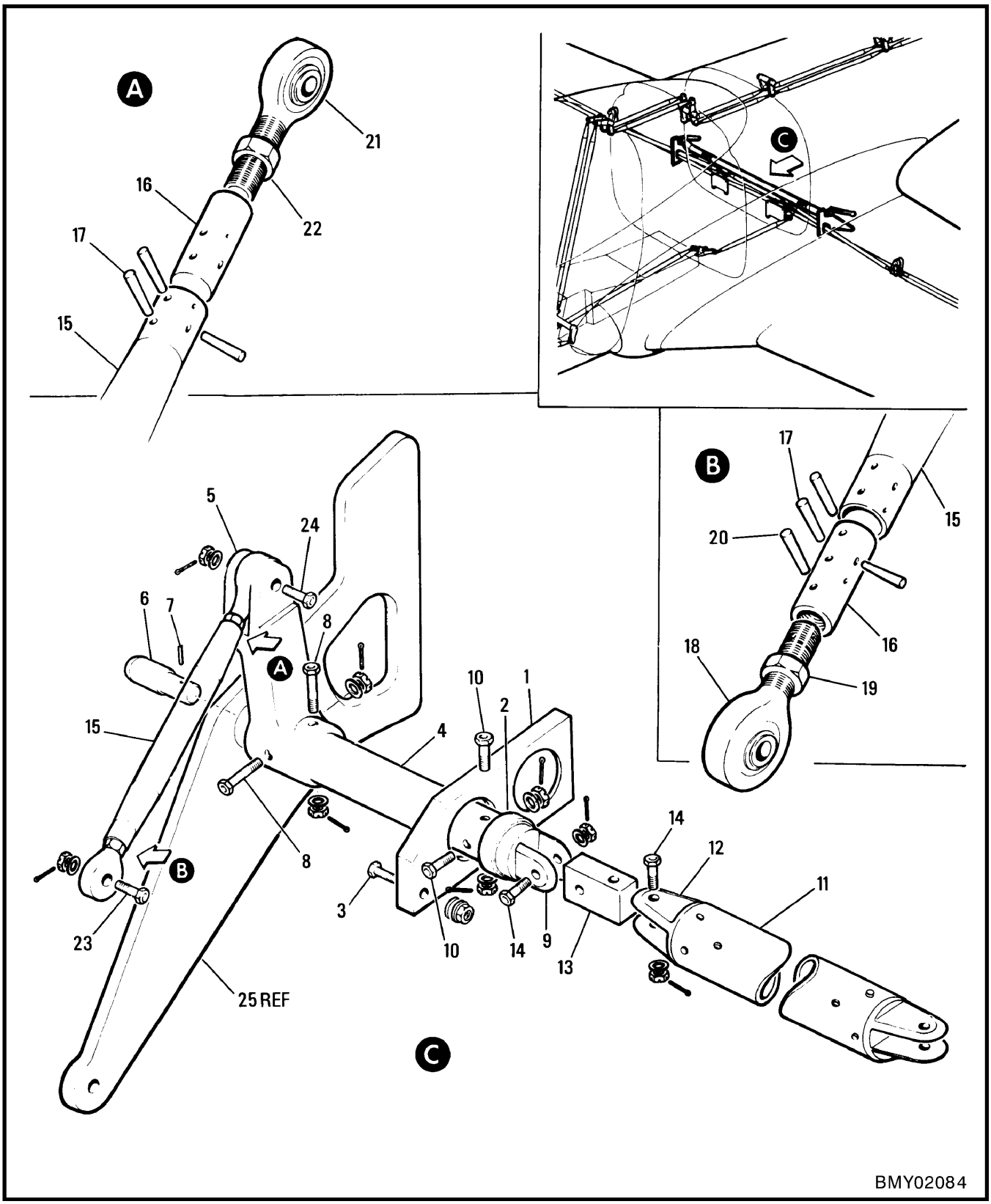

Figure 2-7-14 Flap Interconnect

FIGURE AND INDEX NUMBER	GROUP FLIGHT CONTROLS MAJOR ASSEMBLY FLAP INTERCONNECT PART NUMBER	1 2 3 4 5 6 7 NOMENCLATURE	EFFEC-TIVITY	UNITS PER ASSY
2-7-14 -	41A-90852	INTERCONNECT INSTL - FLAP (SEE SECTION 3)		NP
- 1	41A-90868-2	.MOUNTING - FLAP INTERCONNECT (PORT)		1
- 2	MS27648-21	.BEARING		1
	41A-90868-7	.MOUNTING ASSY - FLAP INTERCONNECT (STBD)		1
	41A-90868-5	..MOUNTING - FLAP INTERCONNECT (STBD)		1
	MS27648-21	..BEARING		1
	S1236-10L	.WASHER - (V88308)		AR
- 3	AN3-7A	.BOLT		6
	AN960PD10	.WASHER		6
	MS21042L3	.NUT		6
- 4	41A-90872-2	.SHAFT - FLAP INTERCONNECT		2
	41A-90855	.LEVER ASSY - FLAP INTERCONNECT		2
- 5	41A-90855-2	..LEVER - FLAP INTERCONNECT		1
- 6	41A-90855-4	..SPIGOT - FLAP INTERCONNECT LEVER		1
- 7	NAS561P4-16	..PIN		1
- 8	NAS6204-28D	.BOLT		4
	AN960PD416	.WASHER		4
	AN320-4	.NUT		4
R	MS24665-134	.COTTER PIN		4
- 9	41A-90867	.FORK END - FLAP INTERCONNECT		2
-10	NAS6204-23D	.BOLT		4
	S1324-4-22	.WASHER - (V88308)		8
	AN320-4	.NUT		4
R	MS24665-134	.COTTER PIN		4
	41A-90865	.TORQUE TUBE ASSY - FLAP INTERCONNECT		1
-11	41A-90865-2	..TORQUE TUBE - FLAP INTERCONNECT		1
-12	41A-90866	..FORK END - FLAP INTERCONNECT		2
-13	41A-90869	.TRUNNION BLOCK - FLAP INTERCONNECT		2
-14	NAS1105-21D	.BOLT		4
	AN960PD516	.WASHER		4
	AN320-5	.NUT		4
R	MS24665-134	.COTTER PIN		4
	41A-90099-62	.ROD ASSY - FLAP INTERCONNECT		2
-15	41A-90099-162	..ROD ASSY - FLAP INTERCONNECT		1
	41A-90099-262	...ROD - FLAP INTERCONNECT		1
-16	41A-90103	...INSERT - FLIGHT CONTROL ROD		2
-17	MS24692-111	...PIN		6
-18	SM5-7C	...ROD END - (V77896)		1
-19	NAS509-7	...NUT		1
-20	MS24692-105	...PIN		1
-21	ST4BR	..ROD END - (V77896)		1
-22	NAS509-6	..NUT		1
-23	NAS1105-30D	.BOLT		2
	S1236-516	.WASHER - (V88308)		AR
	AN960PD516	.WASHER		2
	AN960PD516	.WASHER		2
	AN320-5	.NUT		2
R	MS24665-134	.COTTER PIN		2
-24	NAS6204-16D	.BOLT		2
	AN960PD416	.WASHER		2
	AN320-4	.NUT		2
R	MS24665-134	.COTTER PIN		2
-25	41A-10058-6	LEVER ASSY - FLAP INBOARD HINGE (SEE SECTION 3)		REF

-000-

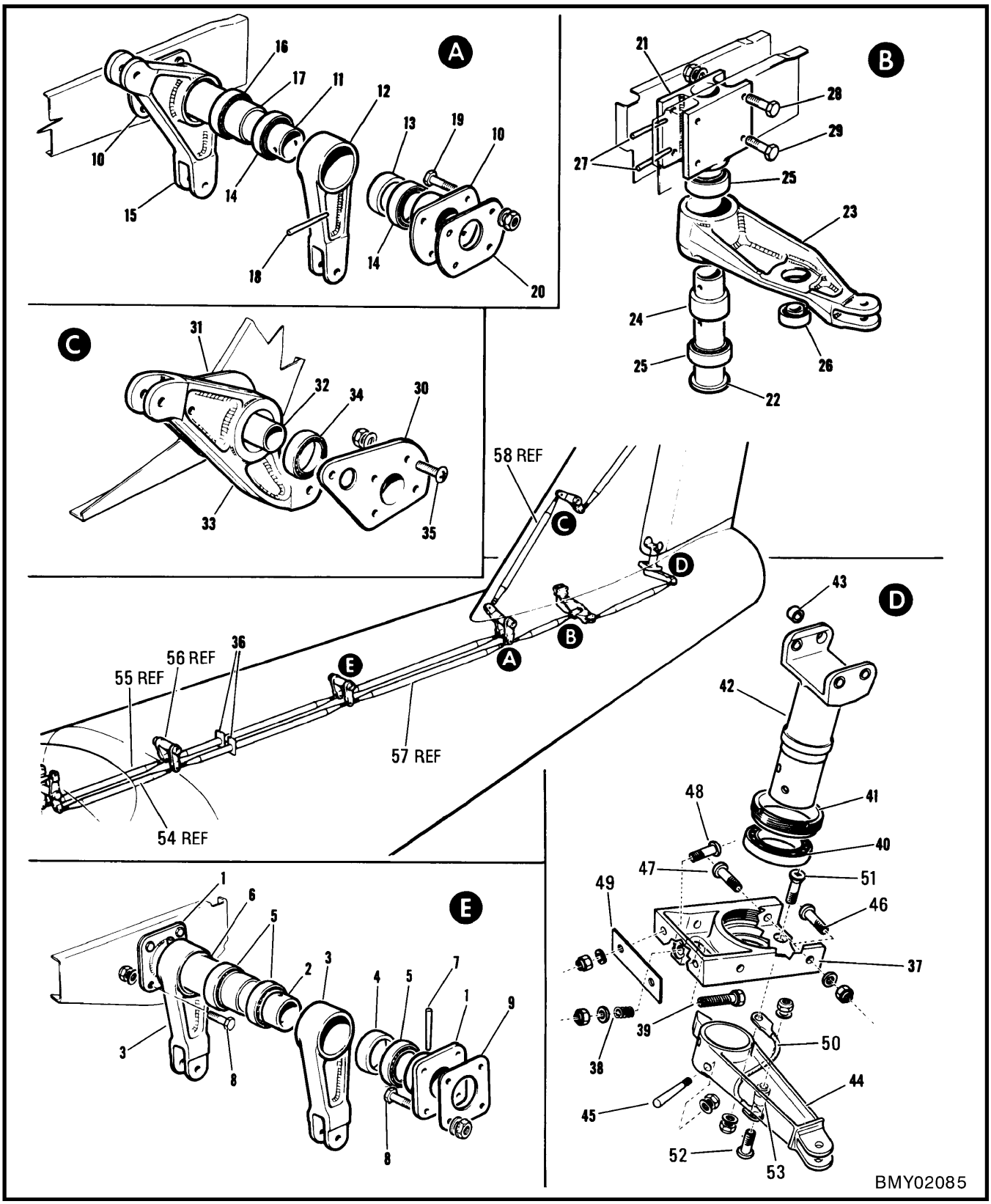

Figure 2-7-15 Aft Fuselage Bellcrank & Levers

FIGURE AND INDEX NUMBER	GROUP FLIGHT CONTROLS MAJOR ASSEMBLY AFT FUSELAGE BELLCRANK & LEVERS PART NUMBER	1 2 3 4 5 6 7 NOMENCLATURE	EFFEC-TIVITY	UNITS PER ASSY
2-7-15 -	41A-90005	FLIGHT CONTROLS INSTL - AFT FUSELAGE (SEE SECTION 3)		NP
	41A-90456	.LEVER INSTL - FS 339 CONTROL		NP
	41A-90448	..LEVER ASSY - FS 339 CONTROL		1
- 1	41A-90446	...HOUSING - BEARING		2
- 2	41A-90447	...SHAFT		1
	41A-90445	...LEVER ASSY - FS 339 CONTROL		2
- 3	41A-90445-2	....LEVER		1
- 4	41A-90430-8	....SPACER		1
- 5	B540DD	....BEARING - (V21335)		2
- 6	41A-90430-12	...SPACER		1
R - 7	MS24692-187	...PIN		2
- 8	NAS1103-2	..BOLT		8
- 9	41A-90444-4	..SHIM - LAMINATED		1
	AN960PD10L	..WASHER		8
	MS21042L3	..NUT		8
	41A-90461	.LEVER INSTL - FS 387 CONTROL		NP
	41A-90460	..LEVER ASSY - FS 387 CONTROL		1
-10	41A-90454	...HOUSING - BEARING		2
-11	41A-90459	...SHAFT - FS 387 CONTROL		1
	41A-90457	...LEVER ASSY - FS 387 RUDDER CTL		1
-12	41A-90457-2	....LEVER		1
-13	41A-90430-8	....SPACER		1
-14	B540DD	....BEARING - (V21335)		2
	41A-90458	...LEVER ASSY - FS 387 ELEVATOR CTL		1
-15	41A-90458-2	....LEVER		1
	41A-90430-8	....SPACER		1
-16	B540DD	....BEARING - (V21335)		2
-17	41A-90430-26	...SPACER		1
R -18	MS24692-187	...PIN		2
-19	NAS1103-2	..BOLT		8
-20	41A-90444-6	..SHIM - LAMINATED		1
	AN960PD10L	..WASHER		8
	MS21042L3	..NUT		8
	41A-90467	.LEVER INSTL - FS 407 RUDDER CTL		NP
	41A-90466	..LEVER ASSY - FS 407 RUDDER CTL		1
-21	41A-90463	...HOUSING - BEARING		2
-22	41A-90464	...SHAFT		1
	41A-90465	...LEVER ASSY - FS 407 RUDDER CONTROL		1
-23	41A-90465-2	....LEVER		1
-24	41A-90430-28	....SPACER		1
-25	B540DD	....BEARING - (V21335)		2
-26	B4	....BEARING - (V77896)		1
-27	AN385-1-12	...PIN		2
-28	NAS1103-20	..BOLT		2
-29	NAS1103-21	..BOLT		2
	AN960PD10L	..WASHER		4
	MS21042L3	..NUT		4
	41A-90552	.BELLCRANK INSTL - FIN ELEVATOR CONTROL		NP
	41A-90552-2	..LEVER ASSY - FIN ELEVATOR CONTROL		1
-30	41A-90554	...MOUNTING - ELEVATOR CONTROL		1
-31	41A-90554-1	...MOUNTING - ELEVATOR CONTROL		1
-32	41A-90430-14	...SHAFT		1
-33	41A-90553	...BELLCRANK - ELEVATOR CONTROL		1
	41A-90430-16	...SPACER		1
-34	B540DD	...BEARING - (V21335)		2
-35	41A-90552-14	..BOLT		8
-	AN960PD10	..WASHER		8
	MS21042L3	..NUT		8
-36	41A-90451-8	.TRAP - (V71310) (FLAME)		2
	41A-36042	HINGE INSTL - RUDDER (SEE SECTION 3)		NP
	41A-36042-2	.HINGE ASSY - RUDDER (MODIFIED BY NW4528142-1)		1
	41A-36044	..HOUSING ASSY - RUDDER HINGE BEARING		1
-37	41A-36044-2	...FITTING - RUDDER HINGE BEARING HOUSING		1

FIGURE AND INDEX NUMBER	GROUP FLIGHT CONTROLS MAJOR ASSEMBLY AFT FUSELAGE BELLCRANK & LEVERS PART NUMBER	1 2 3 4 5 6 7 NOMENCLATURE	EFFEC-TIVITY	UNITS PER ASSY
2-7-15 -38	MS21209F5-15	...INSERT		2
-39	NAS428K5-11	..BOLT		2
	AN960PD516L	..WASHER		2
	AN316-5R	..NUT		2
-40	MS27648-25	..BEARING		1
-41	41A-36045	..RING - RUDDER HINGE RETAINING		1
	41A-36046	..SHAFT ASSY - RUDDER HINGE		1
-42	41A-36046-2	...SHAFT - RUDDER HINGE		1
-43	NAS75-4-008	...BUSHING		4
-44	41A-90468	..LEVER - RUDDER HINGE		1
-45	AN386-2-18A	..PIN		2
	AN975-3	..WASHER		2
	MS21042L3	..NUT		2
-46	NAS623-3-3	.SCREW		2
-47	NAS623-3-7	.SCREW		2
	AN960PD10	.WASHER		4
	MS21042L3	.NUT		4
-48	NAS623-3-2	.SCREW		2
-49	41A-36042-6	.SHIM - (RUDDER HINGE)		1
	AN960C10	.WASHER		2
	MS21042L3	.NUT		2
	NW4528142-1	JUMPER INSTL - BONDING (MODIFYING 41A-36042-2) (SEE SECTION 12)		REF
-50	M83413/8-A05BB	.JUMPER ASSY		1
-51	NAS1203-4	.BOLT		1
-52	NAS623-3-12	.SCREW		1
-53	NAS43DD3-32	.SPACER		1
	AN960JD10L	.WASHER		4
	MS35338-43	.WASHER-LOCK		1
	MS21042L3	.NUT		1
-54	41A-90099-12	ROD ASSY - RUDDER CONTROL (SEE FIG. 2-7-3)		REF
-55	41A-90099-26	ROD ASSY - ELEVATOR CONTROL (SEE FIG. 2-7-3)		REF
-56	41A-90445	LEVER ASSY - FLIGHT CONTROL(SEE FIG. 2-7-2)		REF
-57	41A-90099-16	ROD ASSY - RUDDER CONTROL (SEE FIG. 2-7-16)		REF
-58	41A-90099-32	ROD ASSY - ELEVATOR CONTROL (SEE FIG. 2-7-17)		REF
		-000-		

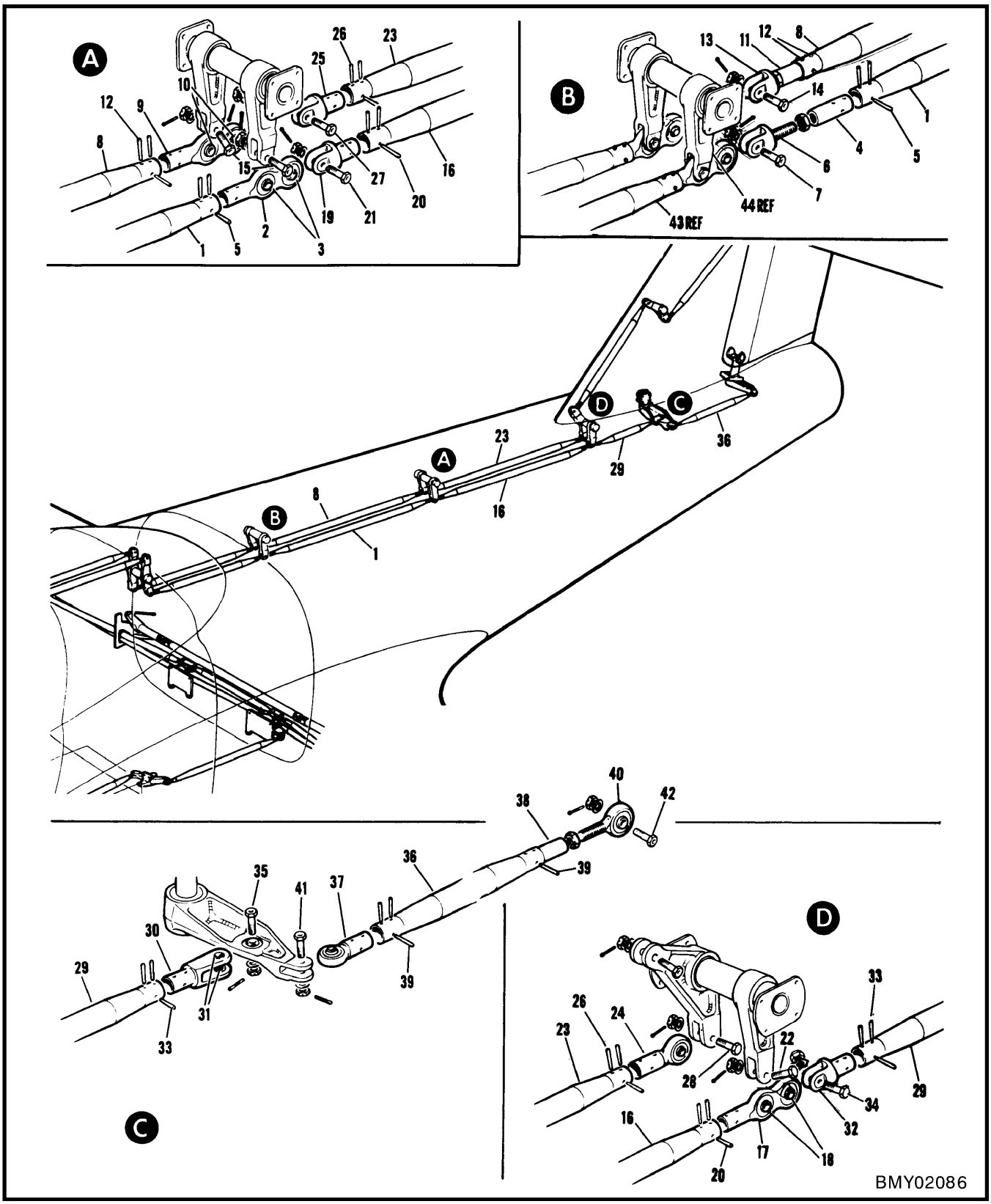

Figure 2-7-16 Aft Fuselage Control Rods

FIGURE AND INDEX NUMBER	GROUP FLIGHT CONTROLS MAJOR ASSEMBLY AFT FUSELAGE CONTROL RODS PART NUMBER	1 2 3 4 5 6 7 NOMENCLATURE	EFFEC-TIVITY	UNITS PER ASSY
2-7-16 -	41A-90005	FLIGHT CONTROLS INSTL - AFT FUSELAGE (SEE FIG. 2-7-15)		REF
	41A-90099-14	.ROD ASSY - FS 295-339 RUDDER CONTROL		1
	41A-90099-114	..ROD ASSY - FS 295-339 RUDDER CONTROL		1
- 1	41A-90099-214	...ROD - FS 295-339 RUDDER CONTROL		1
	41A-90421	...END FITTING ASSY - (CONTROL ROD)		1
- 2	41A-90421-2	....END FITTING - (CONTROL ROD)		1
- 3	BR4H	....BEARING - (V77896)		2
- 4	41A-90103	...INSERT - CONTROL ROD		1
- 5	MS24692-111	...PIN		6
- 6	41A-90439	..ROD END - FLIGHT CONTROLS		1
	NAS509-6	..NUT		1
- 7	NAS6204-15D	.BOLT		1
	AN960PD416	.WASHER		1
	AN320-4	.NUT		1
	MS24665-136	.COTTER PIN		1
	41A-90099-28	.ROD ASSY - FS 295-339 ELEVATOR CTL		1
	41A-90099-128	..ROD ASSY - FS 295-339 ELEVATOR CTL		1
- 8	41A-90099-228	...ROD - FS 295-339 ELEVATOR CONTROL		1
	41A-90421	...END FITTING ASSY - (CONTROL ROD)		1
- 9	41A-90421-2	....END FITTING - (CONTROL ROD)		1
-10	BR4H	....BEARING - (V77896)		2
-11	41A-90103	...INSERT - CONTROL ROD		1
-12	MS24692-135	...PIN		6
-13	41A-90439	..ROD END - FLIGHT CONTROLS		1
	NAS509-6	..NUT		1
-14	NAS6204-15D	.BOLT		1
-15	NAS6204-14D	.BOLT		2
	AN960PD416	.WASHER		3
	AN320-4	.NUT		3
	MS24665-136	.COTTER PIN		3
	41A-90099-16	.ROD ASSY - FS 339-387 RUDDER CONTROL		1
-16	41A-90099-216	..ROD - FS 339-387 RUDDER CONTROL		1
	41A-90421	..END FITTING ASSY - (CONTROL ROD)		1
-17	41A-90421-2	...END FITTING - (CONTROL ROD)		1
-18	BR4H	...BEARING - (V77896)		2
-19	41A-90440	..END FITTING - (FLIGHT CONTROLS)		1
-20	MS24692-111	..PIN		6
-21	NAS6204-15D	.BOLT		1
-22	NAS6204-14D	.BOLT		1
	AN960PD416	.WASHER		2
	AN320-4	.NUT		2
	MS24665-136	.COTTER PIN		2
	41A-90099-30	.ROD ASSY - FS 339-387 ELEVATOR CTL		1
-23	41A-90099-230	..ROD - FS 339-387 ELEVATOR CONTROL		1
-24	SPH4-10C7	..ROD END		1
-25	41A-90440	..END FITTING - (FLIGHT CONTROLS)		1
-26	MS24692-135	..PIN		6
-27	NAS6204-15D	.BOLT		1
-28	NAS6204-16D	.BOLT		1
	AN960PD416	.WASHER		2
	AN320-4	.NUT		2
	MS24665-136	.COTTER PIN		2
	41A-90099-18	.ROD ASSY - FS 387-406 RUDDER CONTROL		1
-29	41A-90099-218	..ROD - FS 387-406 RUDDER CONTROL		1
	41A-90469	..FORK ASSY - FS 406 RUDDER CONTROL		1
-30	41A-90469-2	...FORK - FS 406 RUDDER CONTROL		1
-31	41A-90472	...BUSHING - FS 406 RUDDER CONTROL		2
-32	41A-90440	..END FITTING - (FLIGHT CONTROLS)		1
-33	MS24692-111	..PIN		6
-34	NAS6204-15D	.BOLT		1
-35	NAS6204-14D	.BOLT		1
	AN960PD416	.WASHER		2
	AN320-4	.NUT		2

FIGURE AND INDEX NUMBER	GROUP FLIGHT CONTROLS MAJOR ASSEMBLY AFT FUSELAGE CONTROL RODS PART NUMBER	1 2 3 4 5 6 7 NOMENCLATURE	EFFEC-TIVITY	UNITS PER ASSY
2-7-16	MS24665-136	.COTTER PIN		2
	41A-90099-60	.ROD ASSY - FS 406-434 RUDDER CONTROL		1
	41A-90099-160	..ROD ASSY - FS 406-434 RUDDER CTL		1
-36	41A-90099-260	...ROD - FS 406-434 RUDDER CONTROL		1
-37	SPH4-10C7	...ROD END		1
-38	41A-90103	...INSERT - CONTROL ROD		1
-39	MS24692-111	...PIN		6
-40	ST4AR	..ROD END - (V77896)		1
	NAS509-6	..NUT		1
-41	NAS6204-13D	.BOLT		1
-42	NAS6204-16D	.BOLT		1
	AN960PD416	.WASHER		2
	AN320-4	.NUT		2
	MS24665-136	.COTTER PIN		2
-43	41A-90099-212	ROD ASSY - RUDDER CONTROL (SEE FIG. 2-7-3)		REF
-44	41A-90445	LEVER ASSY - FS 295 CONTROL (SEE FIG. 2-7-2)		REF
		-000-		

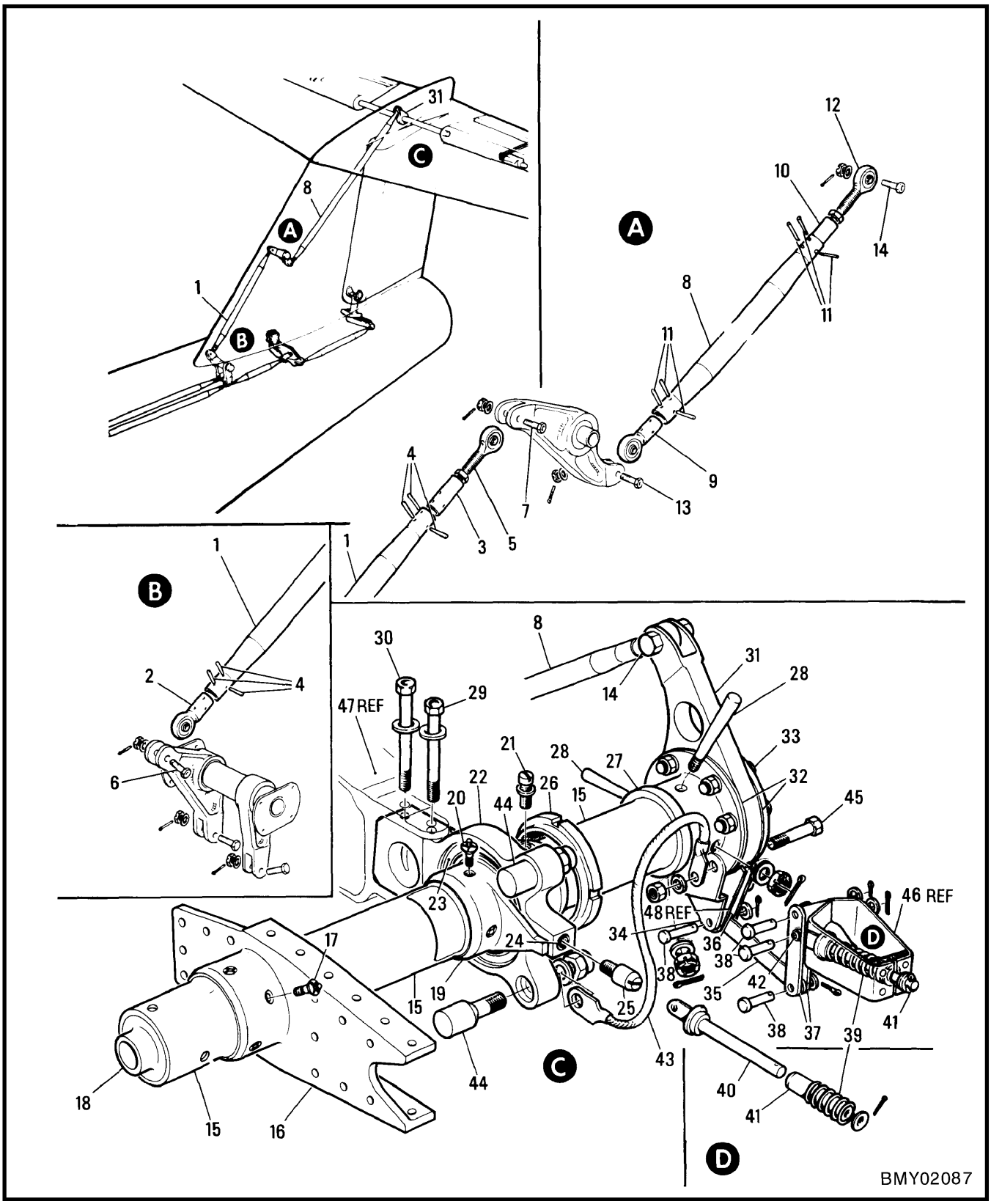

Figure 2-7-17 Elevator Control Rods & Torque Tube

FIGURE AND INDEX NUMBER	GROUP FLIGHT CONTROLS MAJOR ASSEMBLY ELEVATOR CONTROL RODS & TORQUE TUBE PART NUMBER	1 2 3 4 5 6 7 NOMENCLATURE	EFFEC-TIVITY	UNITS PER ASSY
2-7-17 -	41A-90005	FLIGHT CONTROLS INSTL - REAR FUSELAGE (SEE FIG. 2-7-15)		REF
	41A-90099-32	.ROD ASSY - FS 387-406 ELEVATOR CTL		1
	41A-90099-132	..ROD ASSY - FS 387-406 ELEVATOR CTL		1
- 1	41A-90099-232	...ROD - FS 387-406 ELEVATOR CONTROL		1
- 2	SPH4-10C1	...ROD END		1
- 3	41A-90103	...INSERT - CONTROL ROD		1
- 4	MS24692-135	...PIN		6
- 5	ST4AR	..ROD END - (V77896)		1
	NAS509-6	..NUT		1
- 6	NAS6204-16D	.BOLT		1
- 7	NAS6204-15D	.BOLT		1
	AN960PD416	.WASHER		2
	AN320-4	.NUT		2
	MS24665-136	.COTTER PIN		2
	41A-90099-34	.ROD ASSY - FS 406-453 ELEVATOR CTL		1
	41A-90099-134	..ROD ASSY - FS 406-453 ELEVATOR CTL		1
- 8	41A-90099-234	...ROD - FS 406-453 ELEVATOR CONTROL		1
- 9	SPH4-10C1	...ROD END		1
-10	41A-90103	...INSERT - CONTROL ROD		1
-11	MS24692-135	...PIN		6
-12	ST4AR	..ROD END - (V77896)		1
	NAS509-6	..NUT		1
-13	NAS6204-14D	.BOLT		1
-14	NAS6204-13D	.BOLT		1
	AN960PD416L	.WASHER		2
	AN320-4	.NUT		2
	MS24665-136	.COTTER PIN		2
	41A-24028-800	TORQUE TUBE ASSY - ELEVATOR PORT (SEE SECTION 2) (MODIFIED BY NW4528142-1)		1
	41A-24028-801	TORQUE TUBE ASSY - ELEVATOR STBD (MODIFIED BY NW4528142-1)		1
-15	41A-24027	.TORQUE TUBE - ELEVATOR		1
-16	41A-24021	.FITTING - ELEVATOR TORQUE TUBE		1
-17	PP200-4	.JO-BOLT - (V92541)		6
-18	41-24014-2	.FITTING - ELEVATOR TORQUE TUBE		1
-19	41-24015	.FITTING - ELEVATOR TORQUE TUBE INBD HINGE		1
-20	PP200-4	.JO-BOLT - (V92541)		4
-21	AN500A8-5	.SCREW		1
	AN960PD8	.WASHER		1
	41-24022-802	.BEARING ASSY - ELEVATOR INBD HINGE PORT		1
	41-24022-803	.BEARING ASSY - ELEVATOR INBD HINGE STBD		1
-22	41-24022-18	..HOUSING - HINGE BEARING PORT		1
	41-24022-19	..HOUSING - HINGE BEARING STBD		1
-23	MS27648-33	..BEARING		1
-24	MS21209F4-15	..INSERT		1
-25	41-24023	..PEG - FAIRING LOCATION		1
-26	41-24016	.NUT - ELEVATOR TORQUE TUBE SPECIAL		1
-27	41-24012-2	.FITTING - ELEVATOR TORQUE TUBE OPERATING LEVER PORT		1
	41-24012-3	.FITTING - ELEVATOR TORQUE TUBE OPERATING LEVER STBD		1
-28	AN386-2-16	.PIN		2
	AN975-3	.WASHER		2
	AN320-3	.NUT		2
	MS24665-132	.COTTER PIN		2
-	41A-24001	ELEVATOR INSTL - COMPLETE (SEE SECTION 2)		REF
-29	NAS6204-36	.BOLT - (ELEVATOR STA 7 BEARING)		2
-30	NAS6204-40	.BOLT - (ELEVATOR STA 7 BEARING)		2
	AN960PD416L	.WASHER - (UNDER BOLT HEAD)		4
	AN960PD416	.WASHER		4
	MS21042L4	.NUT		4
-31	41A-90555	.LEVER - ELEVATOR CONTROL		1
-32	41A-24001-18	.SHIM		2

FIGURE AND INDEX NUMBER	GROUP FLIGHT CONTROLS MAJOR ASSEMBLY ELEVATOR CONTROL RODS & TORQUE TUBE PART NUMBER	1 2 3 4 5 6 7 NOMENCLATURE	EFFEC-TIVITY	UNITS PER ASSY
2-7-17 -33	NAS6204-18	.BOLT		4
	AN960PD416	.WASHER		7
	MS21042L4	.NUT		4
-34	41A-90610	.SUPPORT - ELEVATOR DOWN SPRING PORT		1
	41A-90610-1	.SUPPORT - ELEVATOR DOWN SPRING STBD		1
	41A-90611	.LEVER ASSY - ELEVATOR DOWN SPRING		1
-35	41A-90611-2	..LEVER - ELEVATOR DOWN SPRING		1
-36	AA224-1	..BEARING - (V70417)		2
-37	41A-90613	.LEVER - ELEVATOR DOWN SPRING		1
-38	MS20392-1C19	.PIN		4
	AN960PD4	.WASHER		4
	MS24665-132	.COTTER PIN		4
-39	41A-90614	.SPRING - ELEVATOR DOWN COMPRESSION		1
-40	41A-24001-56	.SPOOL - (SPRING SUPPORT)		1
	41A-90612	.ROD ASSY - ELEVATOR DOWN SPRING		1
-41	41A-90612-2	..ROD - ELEVATOR DOWN SPRING		1
-42	AA224-1	..BEARING - (V70417)		1
	AN960PD416L	.WASHER		1
	MS24665-132	.COTTER PIN		1
	NW4528142-1	JUMPER INSTL - BONDING (MODIFYING 41A-24028-800 & -801) (SEE SECTION 12)		REF
-43	M83413/8-A08CC	.JUMPER ASSY - (PORT & STBD)		2
-44	41-24017	.PEG - ELEVATOR STOP		2
-45	NAS6204-21	.BOLT		2
	AN960JD416L	.WASHER		6
	AN960-416L	.WASHER		6
	MS35338-44	.WASHER-LOCK		2
	MS21042L4	.NUT		2
	MS21083N4	.NUT		2
-46	41A-20005-46	BRACKET - (SEE SECTION 2)		REF
-47	41A-23021-2	BRACKET - (SEE SECTION 2)		REF
-48	41A-42170	STRIP - ELEVATOR HARNESS RUBBING (SEE SECTION 12)		REF
		-000-		

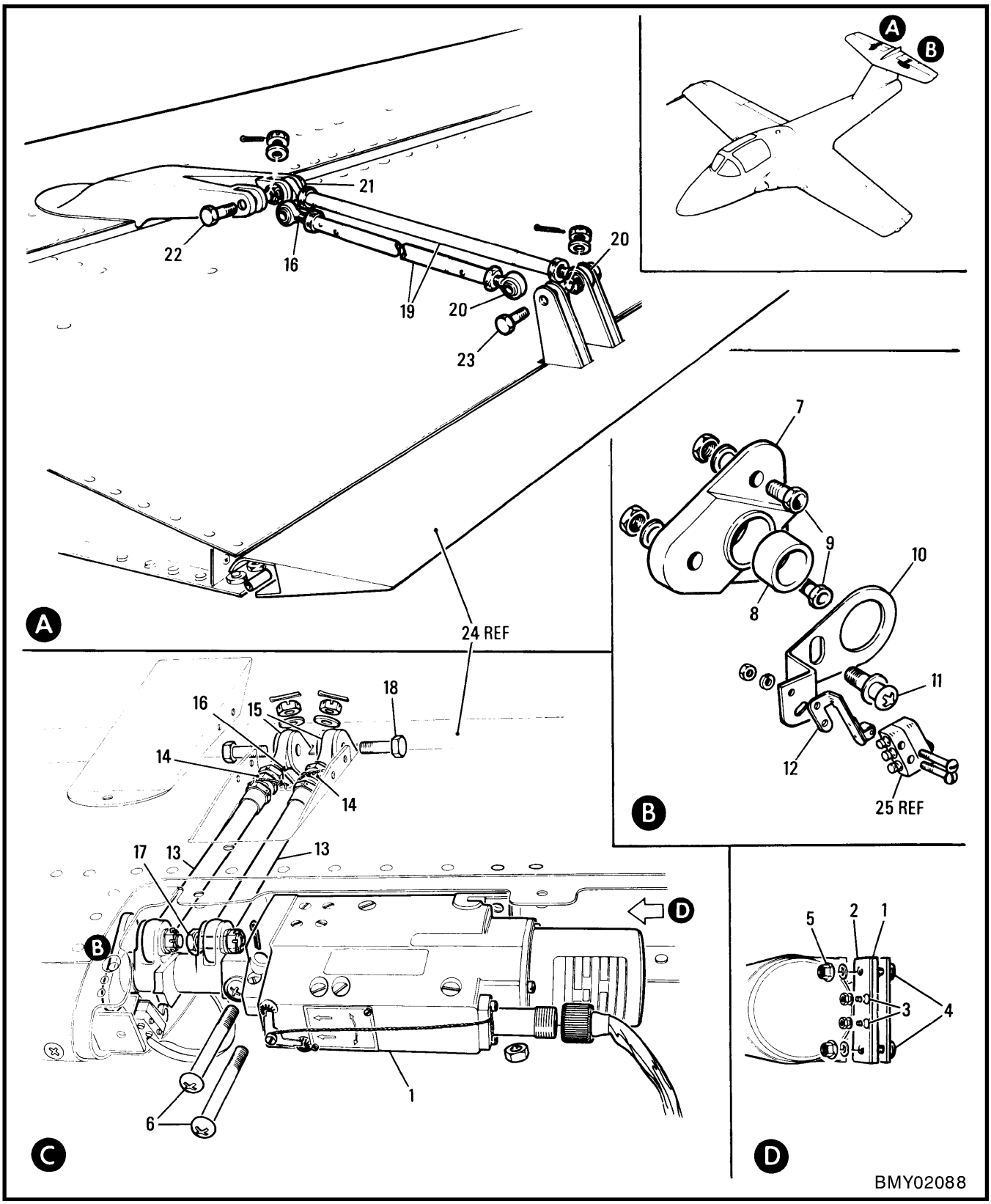

Figure 2-7-18 Elevator Trim & Geared Tab Controls

FIGURE AND INDEX NUMBER	GROUP FLIGHT CONTROLS MAJOR ASSEMBLY ELEVATOR TRIM & GEARED TAB CONTROLS PART NUMBER	1 2 3 4 5 6 7 NOMENCLATURE	EFFEC-TIVITY	UNITS PER ASSY
2-7-18 -	41A-90603-800	TAB CONTROL INSTL - ELEVATOR TRIM (SEE SECTION 2)		NP
- 1	R422M25-1	.ACTUATOR ASSY - (V36123) (ELEVATOR TRIM TAB) (IAW 41A-90702-14) FOR BRKDN SEE C-17-695-000/MS-000		1
	E8058	..FILTER - (V36123)		1
	MS28775-010	..PACKING		1
- 2	41A-90733-2	.PLATE - PACKING		1
- 3	AN507-440R7	.SCREW		2
	AN960PD4	.WASHER		2
	MS21042L04	.NUT		2
- 4	41A-90733	.PLATE ASSY - MOUNTING		1
- 5	MS21042L4	.NUT		2
- 6	41A-90603-2	.BOLT		2
	41A-90603-954	.SHIM - LAMINATED		AR
	41A-90601	.BEARING ASSY		1
- 7	41A-90601-2	..HOUSING - BEARING		1
- 8	41A-90601-4	..BEARING		1
- 9	NAS1103-3	.BOLT		2
-10	41A-90609	.BRACKET - TAB NEUTRAL SWITCH MOUNTING		1
-11	AN3-6A	.BOLT		1
	AN936B10	.LOCK WASHER		1
-12	JS5	.ACTUATOR - (V89944)		1
	41A-90606	.ROD ASSY - ELEVATOR TRIM TAB		2
-13	41A-90604	..ROD ASSY		1
	41A-90604-2	...ROD END		1
	HSBG3	...BEARING - (V97613)		1
	MS21209F4-15	...INSERT		1
-14	41A-90605	..ADJUSTER		1
	NAS509-4	..NUT		1
	NAS509L4	..NUT		1
-15	HRBML3FN	..ROD END ASSY - (V97613)		1
-16	MS9048-006	..PIN		4
-17	NAS1103-7D	.BOLT (MADE FROM NAS6203-7D)		2
	AN960PD10	.WASHER		4
	AN320-3	.NUT		2
	MS24665-153	.COTTER PIN		2
R -18	NAS1103-11D	.BOLT, OR		2
R	41A90603-14	.BOLT - (MADE FROM NAS6203-11D)		2
	AN960PD10	.WASHER		4
	AN320-3	.NUT		2
	MS24665-153	.COTTER PIN		2
	41A-90608	TAB CONTROL INSTL - ELEVATOR GEARED (SEE SECTION 2)		NP
	41A-90607	.ROD ASSY - ELEVATOR GEARED TAB		2
-19	41A-90607-4	..ROD		1
-20	MS21151-7C	..ROD END		1
-21	HRBLL3E	..ROD END - (V97613)		1
	NAS509-4	..NUT		1
	NAS509L4	..NUT		1
-22	NAS1103-9D	.BOLT (MADE FROM NAS6203-9D)		2
	AN960PD10	.WASHER		4
	AN320-3	.NUT		2
	MS24665-134	.COTTER PIN		2
-23	NAS1103-10D	.BOLT		2
	AN960PD10	.WASHER		4
	AN320-3	.NUT		2
	MS24665-134	.COTTER PIN		2
-24	41A-24002	TAB ASSY - ELEVATOR (TRIM & GEARED) (SEE SECTION 2)		REF
-25	MS25085-1	SWITCH ASSY - (SEE SECTION 12)		REF
		-000-		

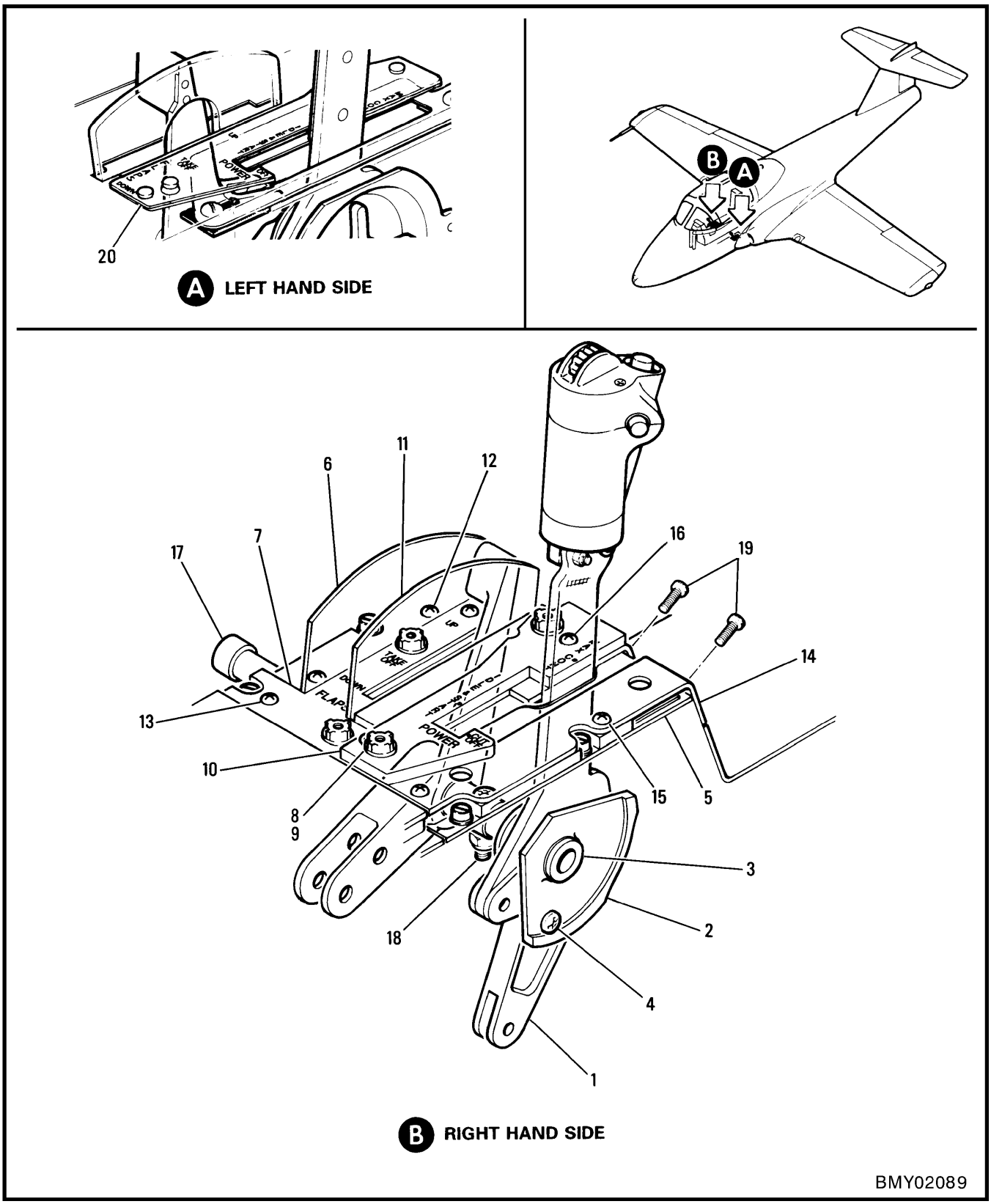

Figure 2-7-19 Cross Cockpit Throttle Quadrant Mod (For Snowbird Aircraft Only)

FIGURE AND INDEX NUMBER	GROUP FLIGHT CONTROLS MAJOR ASSEMBLY CROSS COCKPIT THROTTLE QUADRANT MOD PART NUMBER	1 2 3 4 5 6 7 NOMENCLATURE	EFFEC-TIVITY	UNITS PER ASSY
2-7-19 -	NW4513200-1	CROSS COCKPIT GENL ASSY (SEE SECTIONS 1, 8, 11, 12 & 14)	A	REF
	NW4513038-1	.THROTTLE ADRNT INSTL - RH		REF
	NW4513022-1	..LEVER ASSY - THROTTLE		1
- 1	NW4513022-1	...LEVER - THROTTLE (MADE FROM 41A-90767 (V86061))		1
- 2	NW4513020-1	...CAM		1
- 3	NW4513021-1	...BUSHING		2
- 4	MS27039-1-17	...SCREW		1
	NAS43DD3-36	...SPACER		1
	AN960D10	...WASHER		1
	MS21042L3	...NUT		1
	NW4513023-1	..COVER ASSY		1
- 5	NW4513030-1	...PLATE ASSY		1
- 6	NW4513043-1	...GUARD		1
- 7	NW4513041-1	...PANEL		1
- 8	MS25010B12A	...LAMP ASSY		4
- 9	MS25237-327	...LAMP		4
-10	NW4513024-1	...PANEL (MADE FROM 41A-50728-1 (V86061))		1
-11	NW4513042-1	...GUARD		1
-12	MS35206-230	...SCREW		2
-13	MS35206-232	...SCREW		4
-14	NW4513029-1	...PANEL ASSY		1
-15	MS35206-247	...SCREW		2
-16	MS35206-248	...SCREW		2
-17	NW4513037-1	..SHAFT		1
	NAS43DD10-64	..SPACER		1
	AN960PD816L	..WASHER		AR
-18	MS27039-1-17	..SCREW		1
	AN960D10	..WASHER		1
	MS21042L3	..NUT		1
-19	MS35206-242	..SCREW		2
	NW4513018-1	.THROTTLE QDRNT MOD - LH		NP
-20	NW4513016-1	..PLATE - BLANKING		1
		-000-		
	A	FOR SNOWBIRD ARCFT ONLY		

SECTION 8

HYDRAULIC SYSTEM

TABLE OF CONTENTS

Figure	Title	Page
2-8-1	Hydraulic System	2-8-2
2-8-2	Complete Hydraulic System	2-8-4
2-8-3	Nose Wheel Well Hydraulic System	2-8-6
2-8-4	Fuselage Station 149-206 Hydraulic System	2-8-10
2-8-5	Landing Gear Emergency Valve Control	2-8-14
2-8-6	Brake Hydraulic System	2-8-16
2-8-7	Fuselage Station 206-277 Hydraulic System	2-8-20
2-8-8	Engine Compartment Hydraulic System	2-8-22
2-8-9	Engine Compartment Hydraulic Valves & Filters	2-8-26
2-8-10	Engine Compartment Hydraulic System	2-8-30
2-8-11	Wing Fillet Hydraulic System	2-8-34
2-8-12	Main Landing Gear & Door Hydraulic System	2-8-38
2-8-13	Flap Actuator Hydraulic System	2-8-44
2-8-14	Speedbrake Actuator & Hydraulic Lines	2-8-46
2-8-15	Cross Cockpit Hand Pump & Hydr Piping (For Snowbird Arcft Only)	2-8-48
2-8-16	Cross Cockpit Ldg Gear Emer Valve Control Mod (For Snowbird Aircraft Only)	2-8-50

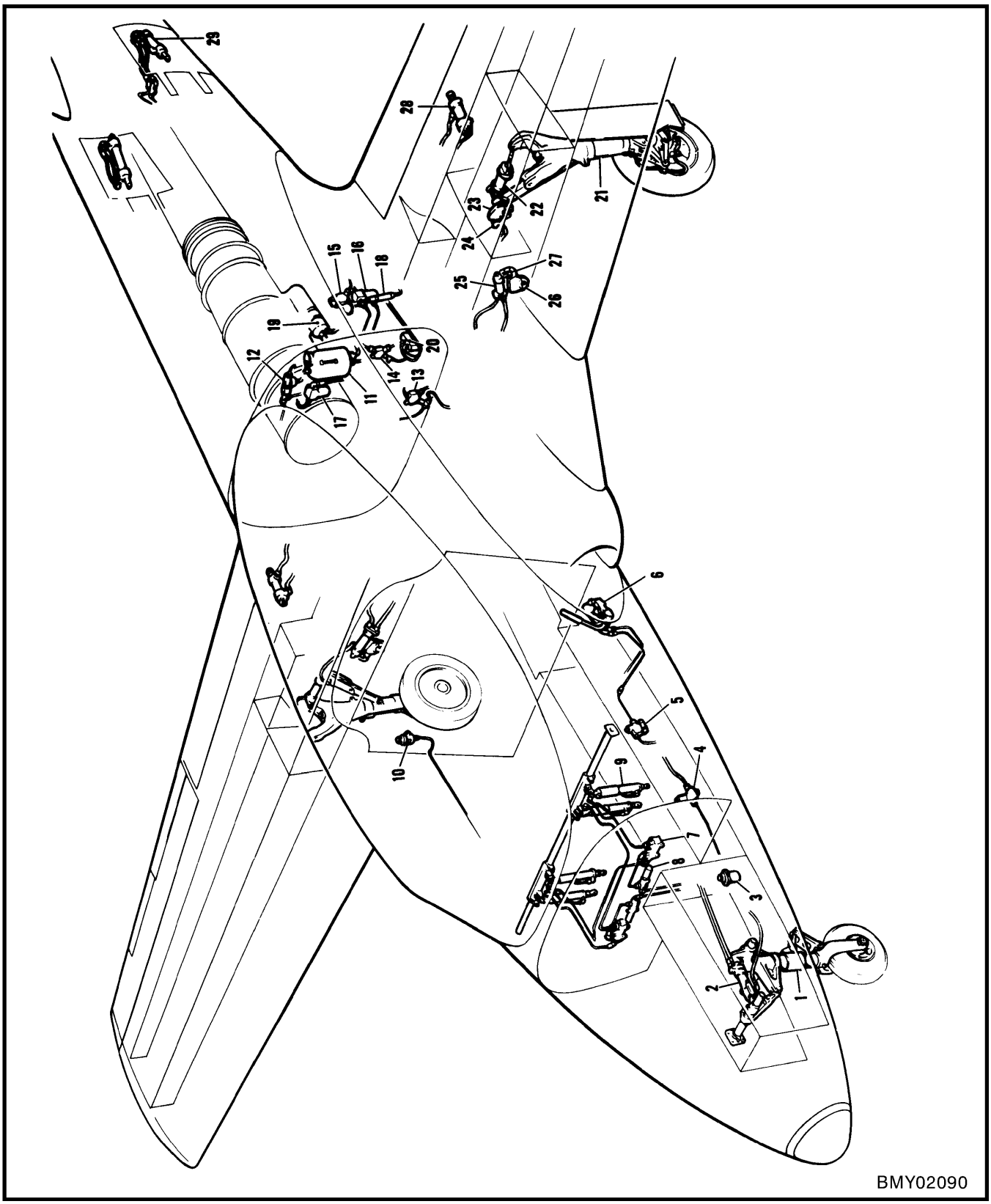

Figure 2-8-1 Hydraulic System

FIGURE AND INDEX NUMBER	GROUP HYDRAULIC SYSTEM MAJOR ASSEMBLY HYDRAULIC SYSTEM PART NUMBER	1 2 3 4 5 6 7 NOMENCLATURE	EFFEC-TIVITY	UNITS PER ASSY
2-8-1 - 1	41A-85021	STRUT ASSY - NOSE GEAR SHOCK (SEE SECTION 4)		REF
- 2	3291000-15	ACTUATOR ASSY - NOSE GEAR (SEE FIG. 2-8-3)		REF
- 3	ST106N	TRANSMITTER - HYDRAULIC PRESSURE (SEE SECTION 14)		REF
- 4	6770-3	VALVE - NOSE WHEEL STEERING SHUT OFF (SEE FIG. 2-8-4)		REF
- 5	3292000-1	VALVE ASSY - EMERGENCY SYS SELECTOR (SEE FIG. 2-8-4)		REF
- 6	41A-42315-14	HANDPUMP ASSY - HYDRAULIC (SEE FIG. 2-8-4)		REF
- 7	70776	VALVE ASSY - MASTER BRAKE CYLINDER TRANSFER (SEE FIG. 2-8-6)		REF
- 8	70775-1	VALVE ASSY - PARKING BRAKE (SEE FIG. 2-8-6)		REF
- 9	70777	CYLINDER ASSY - BRAKE MASTER (SEE FIG. 2-8-6)		REF
-10	41A-75126	RESERVOIR ASSY - BRAKE HYDRAULIC (SEE FIG. 2-8-6)		REF
-11	41A-75023-800	RESERVOIR ASSY - MAIN HYDRAULIC (SEE FIG. 2-8-8)		REF
-12	41A-75105	REGULATOR & FILTER ASSY - AIR PRESSURE (SEE FIG. 2-8-8)		REF
-13	41A-75102-6	VALVE ASSY - LANDING GEAR SELECTOR (SEE FIG. 2-8-9)		REF
-14	41A-75102-800	VALVE ASSY - M/LDG/GR DOOR SELECTOR (SEE FIG. 2-8-9)		REF
-15	41A-75102-2	VALVE ASSY - SPEEDBRAKE SELECTOR (SEE FIG. 2-8-9)		REF
-16	41A-75107-800	FILTER ASSY - MAIN PRESSURE (SEE FIG. 2-8-9)		REF
-17	41A-75108	FILTER ASSY - MAIN RETURN (SEE FIG. 2-8-9)		REF
-18	41A-75106	VALVE ASSY - MAIN SYS PRESSURE RELIEF (SEE FIG. 2-8-10)		REF
-19	41A-42332	PUMP ASSY - ENGINE DRIVEN HYDRAULIC (SEE SECTION 5)		REF
-20	41A-75103	VALVE ASSY - FLAP SELECTOR (SEE FIG. 2-8-11)		REF
-21	41A-87503	STRUT ASSY - MAIN LANDING GEAR SHOCK (SEE SECTION 4)		REF
-22	41A-75117-800	ACTUATOR ASSY - MAIN GEAR (PORT) (SEE FIG. 2-8-12)		REF
-23	41A-87508-804	UPLOCK ASSY - MAIN GEAR (SEE SECTION 4)		REF
-24	41A-75116-18	ACTUATOR ASSY - M/LDG/GR UPLOCK (PORT) (SEE FIG. 2-8-12)		REF
-25	41A-75119	ACTUATOR ASSY - MAIN LANDING GEAR DOOR (SEE FIG. 2-8-12)		REF
-26	41A-87520-804	UPLOCK ASSY - MAIN GEAR DOOR (SEE SECTION 4)		REF
-27	41A-75116-16	ACTUATOR ASSY - M/LDG/GR DOOR UPLOCK (PORT) (SEE FIG. 2-8-12)		REF
-28	41A-75120	ACTUATOR ASSY - FLAP (SEE FIG. 2-8-13)		REF
-29	41A-75113-800	ACTUATOR ASSY - SPEEDBRAKE (SEE FIG. 2-8-14)		REF
		-000-		

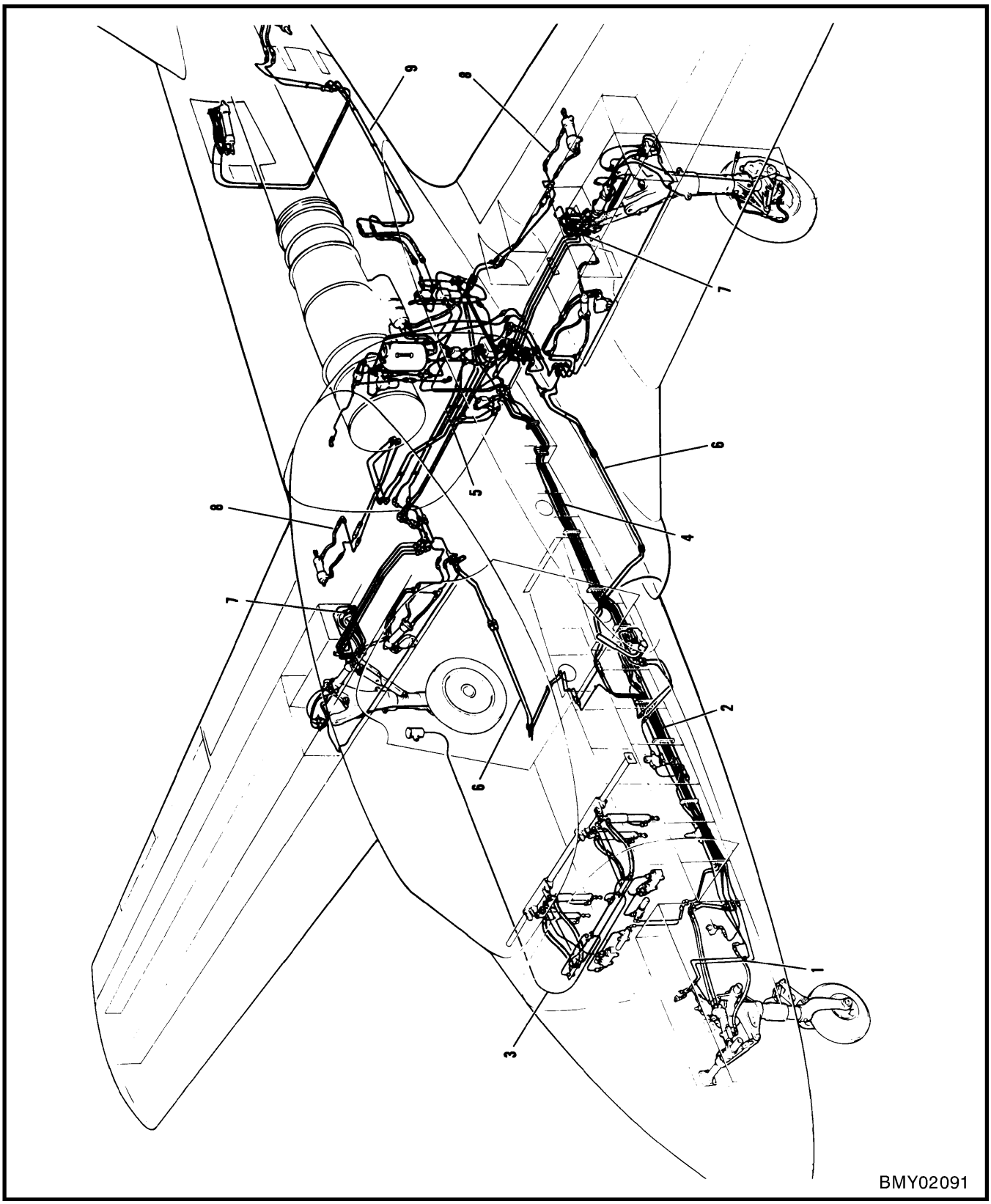

Figure 2-8-2 Complete Hydraulic System

FIGURE AND INDEX NUMBER	GROUP HYDRAULIC SYSTEM MAJOR ASSEMBLY COMPLETE HYDRAULIC SYSTEM PART NUMBER	1 2 3 4 5 6 7 NOMENCLATURE	EFFEC-TIVITY	UNITS PER ASSY
2-8-2 -	41A-42300	HYDRAULIC SYS INSTL - FORWARD FUSELAGE (SEE SECTION 3)		NP
- 1	41A-42303	.HYDRAULIC SYS INSTL - NOSE WHEEL WELL (SEE FIG. 2-8-3)		REF
- 2	41A-42304	.HYDRAULIC SYS INSTL - FS 149-206 (SEE FIG. 2-8-4)		REF
- 3	41A-75050	.HYDRAULIC SYS INSTL - BRAKE (SEE FIG. 2-8-5)		REF
- 4	41A-42305	.HYDRAULIC SYS INSTL - FS 206-277 (SEE FIG. 2-8-7)		REF
- 5	41A-42302	.HYDRAULIC SYS INSTL - ENGINE COMPARTMENT (SEE FIG. 2-8-8)		REF
- 6	41A-42323	.HYDRAULIC SYS INSTL - WING FILLET (SEE FIG. 2-8-11)		REF
- 7	41A-42301	HYDRAULIC SYS INSTL - MAIN LANDING GEAR & DOOR (SEE FIG. 2-8-12)		REF
- 8	41A-42307	HYDRAULIC SYS INSTL - FLAP ACTUATOR (SEE FIG. 2-8-13)		REF
- 9	41A-42306	HYDRAULIC SYS INSTL - REAR FUSELAGE (SEE FIG. 2-8-14)		REF
		-000-		

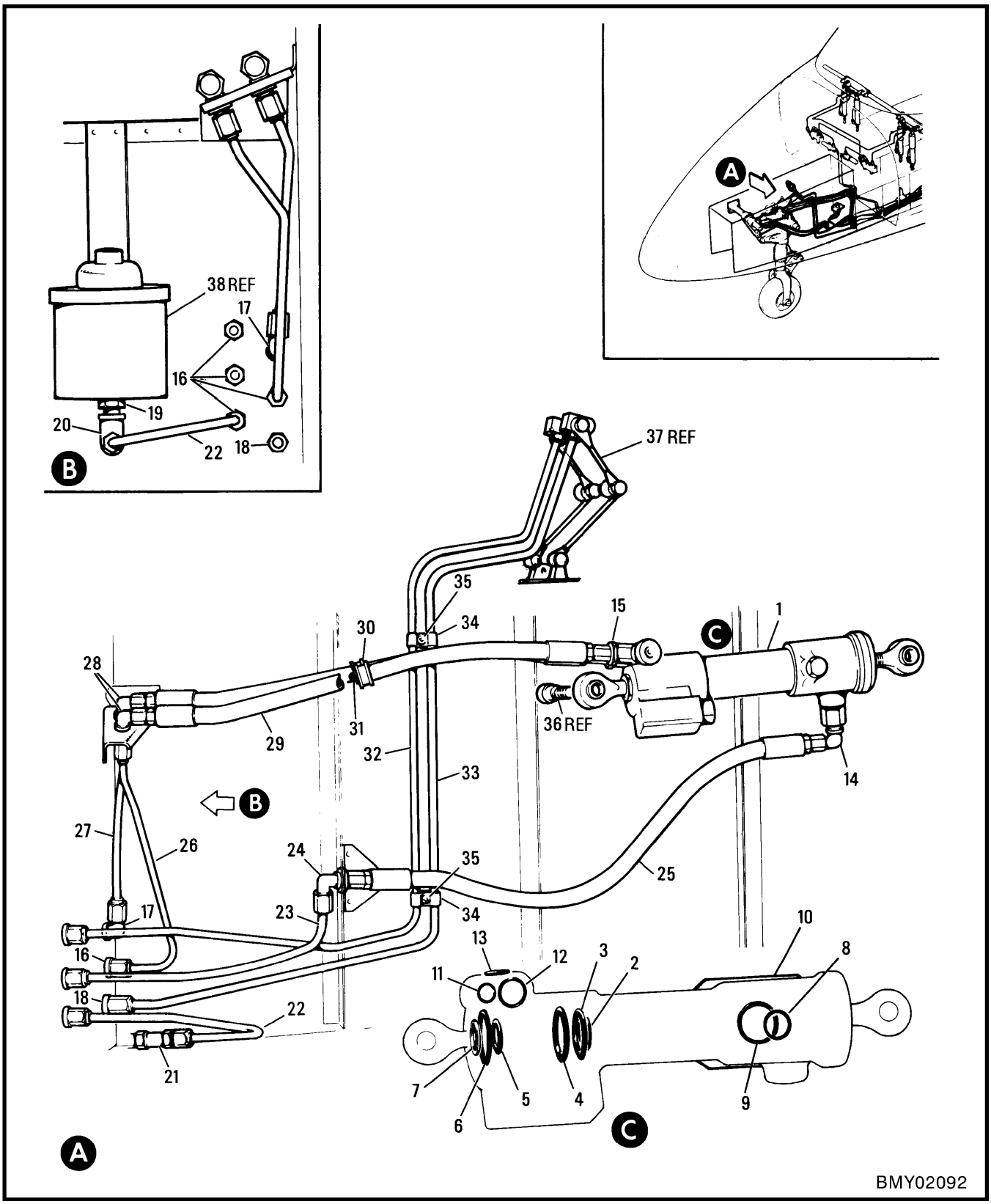

Figure 2-8-3 Nose Wheel Well Hydraulic System

FIGURE AND INDEX NUMBER	GROUP HYDRAULIC SYSTEM MAJOR ASSEMBLY NOSE WHEEL WELL HYDRAULIC SYSTEM PART NUMBER		1 2 3 4 5 6 7 NOMENCLATURE	EFFEC-TIVITY	UNITS PER ASSY
2-8-3 -	41A-42303		HYDRAULIC SYS INSTL - NOSE WHEEL WELL (SEE FIG. 2-8-2)		NP
	41A-75118-806	*	.ACTUATOR ASSY - NOSE GEAR (MOD) (FOR SPARES ORDER 41A-75118-808) OR		1
	41A-75118-808	*	.ACTUATOR ASSY - NOSE GEAR (MOD) (SPARE FOR 41A-75118-806)		
- 1	3291000-15		..ACTUATOR ASSY - (V35962) (NOSE GEAR) (IAW 41A-75013-806) (FOR BKDN SEE C-13-501-000/MS-000) (FOR SPARES ORDER 3291000-17) OR		1
	3291000-17		..ACTUATOR ASSY - (V35962) (NOSE GEAR) (SPARE FOR 3291000-15)		
	3290012-3		...PISTON ASSY - (V35962)		1
- 2	MS28775-016		....PACKING		1
- 3	MS28775-213		....PACKING		1
- 4	MS28775-216		...PACKING		1
	MS28774-216		...RETAINER		2
- 5	MS28775-116		...PACKING		1
	MS28774-116		...RETAINER		2
- 6	MS28775-028		...PACKING		2
- 7	205000L3/4		...SCRAPER - ROD (V05695)		1
- 8	MS28775-012		...PACKING		2
- 9	MS28775-016		...PACKING		2
-10	3290042-1		...GASKET - (V35962)		2
-11	MS28775-007		...PACKING		2
-12	MS28775-015		...PACKING		4
-13	MS28775-009		...PACKING		1
-14	MS21908D4		..ELBOW		1
	AN6289D4		..NUT		1
	MS28778-4		..PACKING		1
	MS9058-04		..RING		1
-15	MS21902D4		..UNION		2
	MS28778-4		..PACKING		2
-16	MS21924D4		.UNION - (FS 149)		4
-17	MS21908D4		.ELBOW - (FS 149)		1
-18	S1289D6-4		.REDUCER - (V88308) (FS 149)		1
	AN960PD716		.WASHER		6
	AN924-4D		.NUT		6
-19	MS21924D4		.UNION - (HYD PRESSURE TRANSMITTER)		1
	AN6289D4		.NUT		1
	MS28778-4		.PACKING		3
	MS9058-04		.RING		1
-20	AN939D4		.ELBOW - (HYD PRESSURE TRANSMITTER)		1
-21	19D2-2		.SNUBBER - (V76906) (IAW 28-75817)		1
-22	41A-42326-12		.LINE ASSY - PRESSURE TRANSMITTER		1
-23	41A-42326-2		.LINE ASSY - NOSE LANDING GEAR UP		1
-24	MS21908-4		.ELBOW		1
	AN960PD716		.WASHER		1
	AN924-4D		.NUT		1
		*	IAW C-12-114-000/CF-282 & C-13-501-000/CF-001		
-25	AE1002256E0220		.HOSE ASSY - (V69705) (LANDING GEAR UP)		1
-26	41A-42326-4		.LINE ASSY - NOSE LANDING GEAR DOWN		1
-27	41A-42326-6		.LINE ASSY - NOSE LDG/GR EMERGENCY DOWN		1
-28	MS21908-4		.ELBOW		2
	AN960PD716		.WASHER		2
	AN924-4D		.NUT		2
-29	AE1002256E0200		.HOSE ASSY - (V69705) (LANDING GEAR DOWN &EMERGENCY DOWN)		2
-30	MS21919WDG9		.CLAMP		2
-31	NAS623-3-4		.SCREW		1
	AN960PD10		.WASHER		1
	MS21042L3		.NUT		1

FIGURE AND INDEX NUMBER	GROUP HYDRAULIC SYSTEM MAJOR ASSEMBLY NOSE WHEEL WELL HYDRAULIC SYSTEM PART NUMBER	1 2 3 4 5 6 7 NOMENCLATURE	EFFEC-TIVITY	UNITS PER ASSY
2-8-3 -32	41A-42326-8	.LINE ASSY - STEERING PRESSURE		1
-33	41A-42326-10	.LINE ASSY - RETURN		1
-34	AN742D4	.CLAMP		2
-35	NAS623-3-2	.SCREW		2
	MS35335-32	.LOCK WASHER		2
-36	41A-85018	BOLT - NOSE LDG/GR (ACTUATOR RETAINING) (SEE SECTION 4)		REF
-37	ST106N	TRANSMITTER - HYD PRESSURE (SEE SECTION 12)		REF
-38	3295000-4	SWIVEL ASSY - NOSE GEAR (SEE SECTION 4)		REF
		-000-		

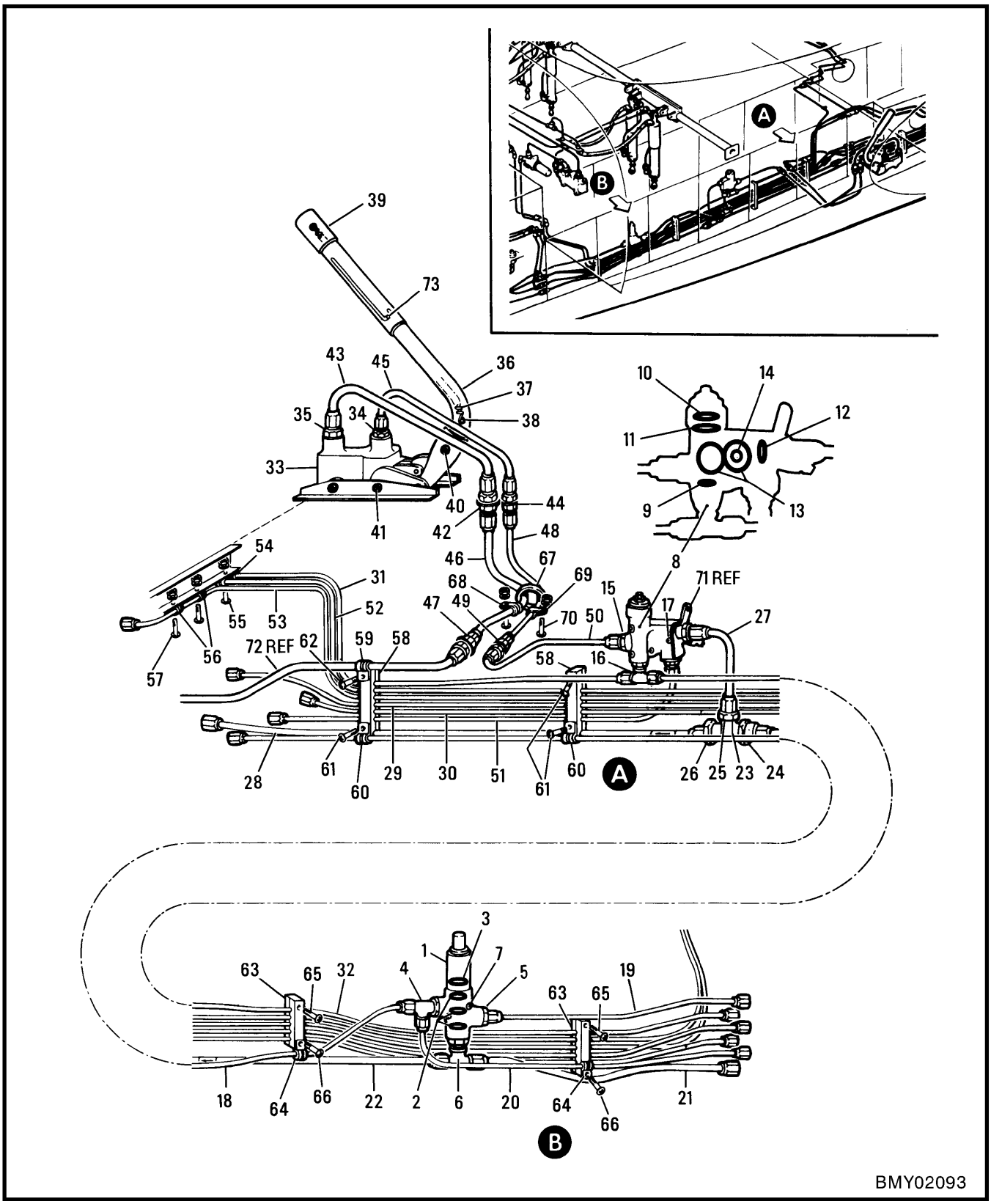

BMY02093

Figure 2-8-4 Fuselage Station 149-206 Hydraulic System

FIGURE AND INDEX NUMBER	GROUP HYDRAULIC SYSTEM MAJOR ASSEMBLY FUSELAGE STATION 149-206 HYDRAULIC SYSTEM PART NUMBER	1 2 3 4 5 6 7 NOMENCLATURE	EFFEC-TIVITY	UNITS PER ASSY
2-8-4 -	41A-42304	HYDRAULIC SYS INSTL - FS 149-206 (SEE FIG. 2-8-2)		NP
	41A-75101-800	.VALVE ASSY - NOSE WHEEL STEERING SHUT OFF		1
- 1	6770-3	..VALVE ASSY - (V02121) (NOSE WHEEL STEERING SHUT OFF) (IAW 41A-75004-2) (FOR BKDN SEE C-13-883-000/MS-000)		1
- 2	MS28775-015	...PACKING		3
- 3	MS28775-023	...PACKING		1
	MS28774-023	...RETAINER		2
- 4	MS21912-4	..TEE - (PRESSURE)		1
	AN6289D4	..NUT		1
	M83461/2-904	..PACKING - (V88308)		1
	MS9058-04	..RING		1
- 5	MS21902-4	..UNION - (CYLINDER)		1
	M83461/2-904	..PACKING - (V88308)		1
- 6	MS21909D6	..TEE - (RETURN)		1
	AN6289D6	..NUT		1
	S1422-6	..PACKING - (V88308)		1
	MS9058-06	..RING		1
- 7	NAS623-3-34	.SCREW		2
	NAS43DD3-32	.SPACER		2
	41A-75100	.VALVE ASSY - EMERGENCY SYS SELECTOR		1
- 8	3292000-1	..VALVE ASSY - (V35962) (EMERGENCY SYS SEL) (IAW 41A-75003-2) (FOR BKDN SEE C-13-500-000/MS-000)		1
- 9	MS28775-010	...PACKING		1
	MS28774-010	...RETAINER		1
-10	MS28775-009	...PACKING		1
-11	MS28775-015	...PACKING		1
-12	MS28775-012	...PACKING		1
	MS28774-012	...RETAINER		1
-13	MS28775-020	...PACKING		2
	MS28774-020	...RETAINER		2
-14	MS28775-012	...PACKING		2
-15	MS21902D4	..UNION		1
	M83461/2-904	..PACKING - (V88308)		1
-16	MS21909D4	..TEE		1
	AN6289D4	..NUT		1
	M83461/2-904	..PACKING - (V88308)		1
	MS9058-04	..RING		1
-17	NAS623-3-4	.SCREW		3
	41A-42304-2	.WASHER		1
	41A-42304-3	.WASHER		1
-18	41A-42326-84	.LINE ASSY - PRESSURE		1
-19	41A-42326-22	.LINE ASSY - STEERING PRESSURE		1
-20	41A-42326-14	.LINE ASSY - STEERING PRESSURE		1
-21	41A-42326-50	.LINE ASSY - RETURN		1
-22	41A-42326-52	.LINE ASSY - RETURN		1
-23	AN938D6	.TEE		1
-24	1112-589977	.VALVE - (V92003) (CHECK)		1
-25	MS21916D6-4	.REDUCER		1
-26	MS21902D6	.UNION		1
	S1422-6	.PACKING - (V88308)		3
-27	41A-42326-72	.LINE ASSY - RETURN		1
-28	41A-42326-54	.LINE ASSY - RETURN		1
-29	41A-42326-26	.LINE ASSY - NOSE LANDING GEAR UP		1
-30	41A-42326-24	.LINE ASSY - NOSE LANDING GEAR DOWN		1
-31	41A-42326-36	.LINE ASSY - NOSE LANDING GEAR EMERGENCY DOWN		1
-32	41A-42326-34	.LINE ASSY - NOSE LANDING GEAR EMERGENCY DOWN		1
	41A-42337	.HANDPUMP INSTL - HYDRAULIC		NP
	41A-42315-10	..HANDPUMP ASSY - HYDRAULIC (FOR SPARES ORDER 41A-42315-14)		1
	41A-42315-14	..HANDPUMP ASSY - (SPARE FOR 41A-42315-10)		

FIGURE AND INDEX NUMBER	GROUP HYDRAULIC SYSTEM MAJOR ASSEMBLY FUSELAGE STATION 149-206 HYDRAULIC SYSTEM PART NUMBER	1 2 3 4 5 6 7 NOMENCLATURE	EFFEC-TIVITY	UNITS PER ASSY
2-8-4 -33	AN6201-1	...HANDPUMP - HYDRAULIC (V81350) FOR BKDN SEE C-13-395-000/MS-V02 (FOR SPARES ORDER 41A-42315-12)		1
	41A-42315-12	...HANDPUMP ASSY - (MADE FROM AN6201-1)		
-34	MS21916D8-6	...REDUCER		1
	S1422-8	...PACKING - (V88308)		1
-35	MS21916D6-4	...REDUCER		1
	S1422-6	...PACKING - (V88308)		1
	41A-42310-12	...HANDLE ASSY - HYDRAULIC HANDPUMP		1
-36	41A-42311-2	....HANDLE - HYDRAULIC HANDPUMP		1
	41A-42312	....HANDLE - HYD HANDPUMP EXTENSION		1
-37	41A-42314	....SPRING - HYD HANDPUMP HANDLE EXTENSION		1
-38	NAS561P4-18	....PIN		2
-39	21GM4-190	....TIP - (V77969) (VIMY PATTERN RUBBER)		1
-40	MS27039-1-28	...SCREW - (HANDLE RETAINING) (FOR SPARES USE MS 27039-1-24)		1
	MS27039-1-24	...SCREW - (SPARE FOR MS27039-1-28)		
	AN960PD10L	...WASHER		1
	MS21042L3	...NUT		1
	LAC24-426	...TAPE - (TYPE 11)		AR
-41	NAS623-4-42	..SCREW - (PUMP RETAINING)		2
	NAS43DD4-16	..SPACER		2
	AN960-416	..WASHER		2
	MS21042L4	..NUT		2
-42	MS21924D6	..UNION		1
	AN960PD916	..WASHER		1
	AN924-6	..NUT		1
-43	41A-42327-24	..LINE ASSY - HANDPUMP SUCTION		1
-44	MS21924-4	..UNION		1
	AN960PD716	..WASHER		1
	AN924-4	..NUT		1
-45	41A-42327-22	..LINE ASSY - HANDPUMP PRESSURE		1
-46	41A-42326-62	.LINE ASSY - HANDPUMP SUCTION		1
-47	MS21924D6	.UNION		1
	AN960PD916	.WASHER		1
	AN924-6D	.NUT		1
-48	41A-42326-30	.LINE ASSY - HANDPUMP PRESSURE		1
-49	MS21924D4	.UNION		1
	AN960PD716	.WASHER		1
	AN924-4D	.NUT		1
-50	41A-42326-32	.LINE ASSY - HANDPUMP PRESSURE		1
-51	41A-42326-82	.LINE ASSY - HANDPUMP PRESSURE		1
-52	41A-42326-42	.LINE ASSY - LH BRAKE		1
-53	41A-42326-46	.LINE ASSY - RH BRAKE		1
-54	316-4-8	.CLIP - (V00502) (FS 206 BRAKE TO EMERGENCY DOWN LINE)		2
-55	NAS623-3-4	.SCREW		1
	AN960PD10	.WASHER		1
	MS21042L3	.NUT		1
-56	316-4-8	.CLIP - (V00502) (FS 206 LH BRAKE LINE)		2
-57	NAS623-3-2	.SCREW		2
	AN960PD10L	.WASHER		2
	MS21042L3	.NUT		2
-58	41A-42317	.SUPPORT ASSY - LINE		2
-59	316-6-8	.CLIP - (V00502) (HANDPUMP SUCTION)		1
-60	316-4-8	.CLIP - (V00502) (PRESSURE LINE)		2
-61	NAS623-3-21	.SCREW		3
-62	NAS623-3-34	.SCREW		1
-63	41A-42316	.SUPPORT ASSY - LINE		2
-64	316-4-8	.CLIP - (V00502)		2
-65	NAS623-3-21	.SCREW		2
-66	NAS623-3-22	.SCREW		2

FIGURE AND INDEX NUMBER	GROUP HYDRAULIC SYSTEM MAJOR ASSEMBLY FUSELAGE STATION 149-206 HYDRAULIC SYSTEM PART NUMBER	1 2 3 4 5 6 7 NOMENCLATURE	EFFEC-TIVITY	UNITS PER ASSY
2-8-4 -67	41A-42304-68	.GROMMET		1
-68	316-4-8	.CLIP - (V00502)		1
-69	316-6-8	.CLIP - (V00502)		1
-70	NAS623-3-2	.SCREW		2
	AN960PD10	.WASHER		2
	MS21042L3	.NUT		2
-71	41A-90021-10	LEVER ASSY - LANDING GEAR EMERGENCY (SEE FIG. 2-8-5)		REF
-72	41A-42326-64	LINE ASSY - HANDPUMP SUCTION (SEE FIG. 2-8-7)		REF
-73	MS20604ML4W3	....RIVET BLIND – (EXTENSION HANDLE ATTACHING)		1
		-000-		

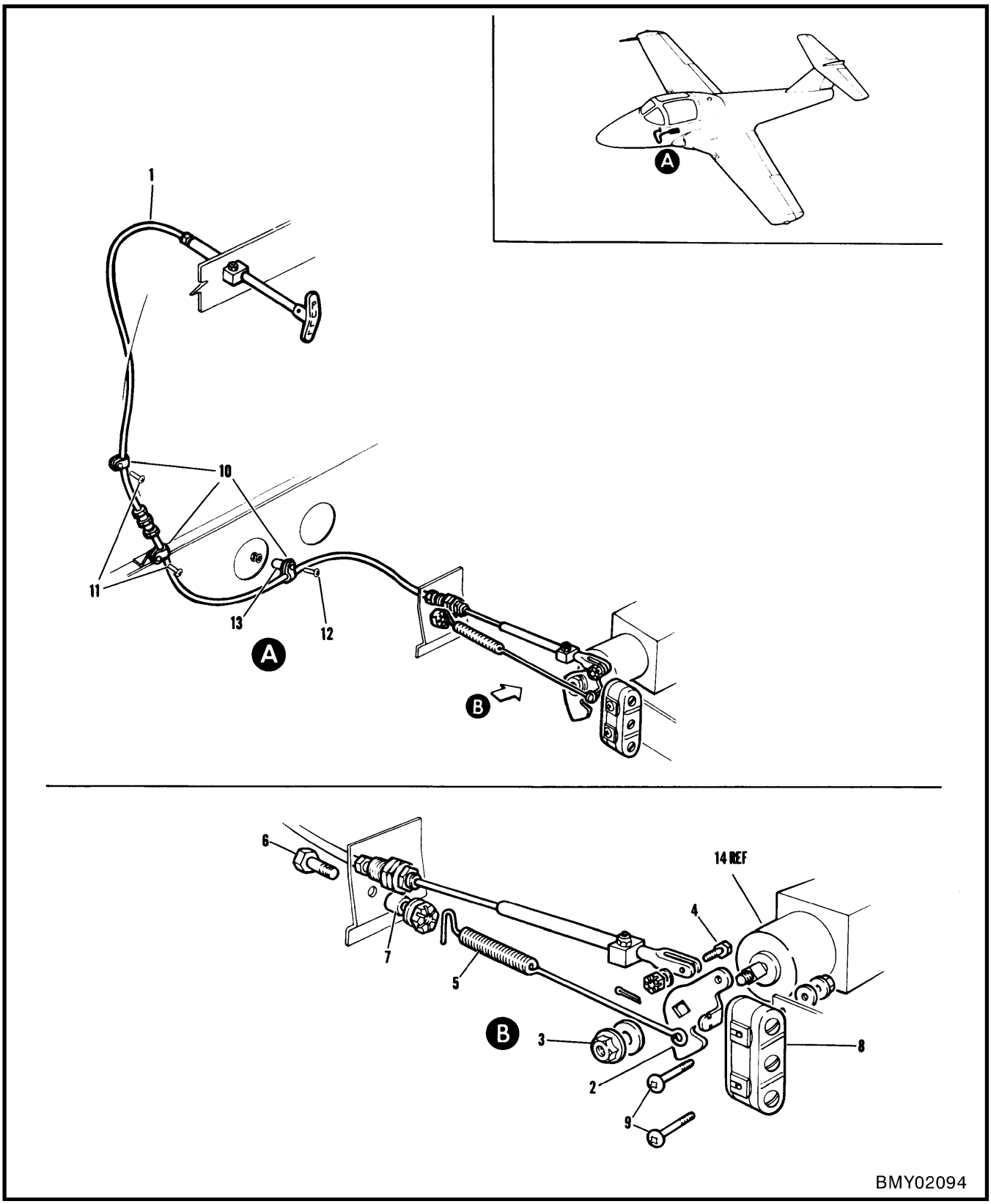

Figure 2-8-5 Landing Gear Emergency Valve Control

FIGURE AND INDEX NUMBER	GROUP HYDRAULIC SYSTEM MAJOR ASSEMBLY LANDING GEAR EMERGENCY VALVE CONTROL PART NUMBER	1 2 3 4 5 6 7 NOMENCLATURE	EFFEC-TIVITY	UNITS PER ASSY
2-8-5 -	41A-90020	VALVE CONTROL INSTL - LANDING GEAR EMERGENCY (SEE SECTION 3)		NP
- 1	40253	.VALVE CONTROL ASSY - (V78710) (LANDING GEAR EMERGENCY) (IAW 41A-90023-800)		1
- 2	41A-90021-16	.LEVER ASSY - LANDING GEAR EMERGENCY		1
	AN960PD416	.WASHER		1
- 3	MS21042L4	.NUT		1
- 4	NAS1103-4D	.BOLT		1
	AN960PD10L	.WASHER		1
	AN320-3	.NUT		1
	MS24665-151	.COTTER PIN		1
- 5	41A-90022	.SPRING - LDG/GR EMERGENCY SELECTOR VALVE EXTENSION		1
- 6	NAS6204-16D	.BOLT		1
- 7	NAS43DD4-64	.SPACER		1
	AN960PD416	.WASHER		1
	AN320-3	.NUT		1
- 8	MS25011-1	.SWITCH		1
- 9	MS35206-328	.SCREW		2
	AN960-6L	.WASHER		AR
	MS21042L06	.NUT		2
-10	A5506	.CLIP - (V78710)		3
-11	MS35207-263	.SCREW		2
-12	MS35207-269	.SCREW		1
-13	NAS43DD3-64	.SPACER		1
	AN960PD10L	.WASHER		3
	MS21042L3	.NUT		3
-14	3292000-1	VALVE ASSY - EMERGENCY SYS SELECTOR (SEE FIG. 2-8-4)		REF

-000-

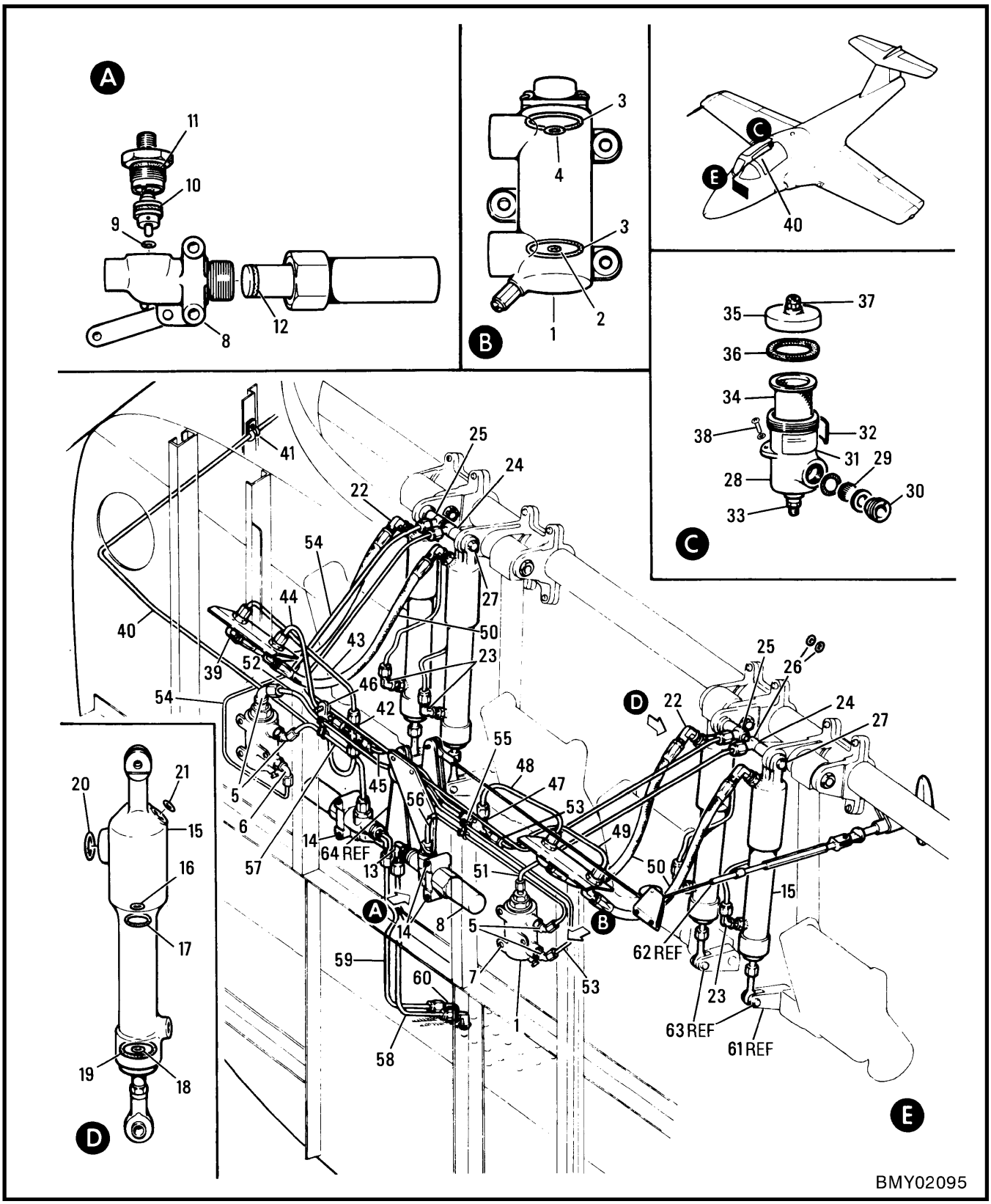

Figure 2-8-6 Brake Hydraulic System

FIGURE AND INDEX NUMBER	GROUP HYDRAULIC SYSTEM MAJOR ASSEMBLY BRAKE HYDRAULIC SYSTEM PART NUMBER		1 2 3 4 5 6 7 NOMENCLATURE	EFFEC-TIVITY	UNITS PER ASSY
2-8-6 -	41A-75050		HYDRAULIC SYS INSTL - BRAKE (SEE FIG. 2-8-2)		NP
	41A-75111-18	*	.VALVE ASSY - BRAKE MASTER CYLINDER TRANSFER (PORT)		1
	41A-75111-20	*	.VALVE ASSY - BRAKE MASTER CYLINDER TRANSFER (STBD)		1
- 1	70776		..VALVE ASSY - (V00502) (MASTER BRAKE CYLINDER TRANSFER) (IAW 41A-75008) (FOR BKDN SEE C-13-250-000/MS-000)		1
- 2	MS28775-004		...PACKING		1
- 3	MS28775-214		...PACKING		2
	215027		...POPPET ASSY - (V00502)		1
- 4	MS28775-110		....PACKING		1
- 5	MS21907D4		..ELBOW - (3 ON PORT & 2 ON STBD)		5
- 6	MS21908D4		..ELBOW - (STBD)		1
	AN6289D4		..NUT		2
	MS28778-4		..PACKING		2
	MS28777-4		..RING		2
- 7	NAS623-3-7		.SCREW		6
	AN960PD10		.WASHER		6
	41A-75112-8	*	.VALVE ASSY - PARKING BRAKE (PORT)		1
	41A-75112-6	*	.VALVE ASSY - PARKING BRAKE (STBD)		1
- 8	70775-2		..VALVE ASSY - (V00502) (PARKING BRAKE PORT) (IAW 41A-75009-2) (FOR BKDN SEE C-13-249-000/MS-000)		1
	70775-1		..VALVE ASSY - (V00502) (PARKING BRAKE STBD) (IAW 41A-75009) (FOR BKDN SEE C-13-249-000/MS-000)		1
- 9	MS28775-006		...PACKING		1
-10	MS28775-111		...PACKING		1
-11	MS28778-8		...PACKING		1
-12	MS28775-114		...PACKING		1
-13	MS21908D4		..ELBOW		1
	AN6289D4		..NUT		1
	MS28778-4		..PACKING		1
	MS28777-4		..RING		1
-14	MS27039-1-30		.SCREW		4
	AN960PD10L		.WASHER		4
-15	70777		.CYLINDER ASSY - (V00502) (BRAKE MASTER) (IAW 41A-75007) (FOR BKDN SEE C-13-248-000/MS-000)		4
-16	MS28775-010		..PACKING		1
	MS28774-010		..RETAINER		1
-17	MS28775-115		..PACKING		1
	MS28774-115		..RETAINER		1
-18	MS28775-011		..PACKING		1
	MS28774-011		..RETAINER		1
-19	MS28775-118		..PACKING		1
	MS28774-118		..RETAINER		1
-20	MS28775-117		..PACKING		1
-21	MS28778-4		..PACKING		1
-22	MS21908D4		.ELBOW - (BRAKE CYLINDER UPPER)		4
-23	MS21926-4D		.ELBOW - (BRAKE CYLINDER LOWER)		4
	AN6289D4		.NUT		8
	MS28778-4		.PACKING		8
	MS28777-4		.RING		8
-24	3294000-3		.JOINT ASSY - (V35962) (MASTER CYL SWIVEL) (IAW 41A-75010-2)		2
-25	3294000-4		.JOINT ASSY - (V35962) (MASTER CYL SWIVEL) (IAW 41A-75010-4)		2
-26	MS28775-012		..PACKING		2
	30641-012		..SEAL		2
		*	IAW C-12-114-000/CF-321		

FIGURE AND INDEX NUMBER	GROUP HYDRAULIC SYSTEM MAJOR ASSEMBLY BRAKE HYDRAULIC SYSTEM PART NUMBER		1 2 3 4 5 6 7 NOMENCLATURE	EFFEC-TIVITY	UNITS PER ASSY
2-8-6 -27	41A-75050-10		.BOLT		4
	41A-75050-11		.WASHER		4
	41A-75126		.RESERVOIR ASSY - BRAKE HYDRAULIC		1
-28	41A-75268-2		..HOUSING - RESERVOIR		1
	41A-75126-16		..TUBE - ANTI SURGE		1
-29	41A-75126-13		..WINDOW - RESERVOIR SIGHT GAUGE		1
	MS28775-123		..PACKING		1
	S1246AB68-42-16		..WASHER - (V88308)		1
-30	41A-75126-14		..RETAINER - RESERVOIR SIGHT GAUGE WINDOW		1
-31	41A-75269		..NAMEPLATE - BRAKE RESERVOIR FILLING INSTRUCTION		1
-32	S1043M		..NAMEPLATE - (V88308)		1
-33	MS21902D4		..UNION		1
	MS28778-4		..PACKING		1
-34	41A-75403-8		..STRAINER ASSY - HYDRAULIC RESERVOIR		1
-35	41A-75268-4		..COVER - RESERVOIR		1
-36	41A-75270		..GASKET		1
-37	59911		..VALVE ASSY - (V00502) (CHECK)		1
	MS28778-4		..PACKING		1
-38	NAS623-3-3		.SCREW		3
	AN960PD10L		.WASHER		3
-39	MS21908D4		.ELBOW - (FS 149)		4
	AN960PD716		.WASHER		4
	AN924-4D		.NUT		4
-40	41A-75202-28		.LINE ASSY - BRAKE PRESSURE		1
-41	316-4-8		.CLIP - (V00502)		4
	NAS623-3-3		.SCREW		4
	AN960PD10L		.WASHER		4
	MS21042L3		.NUT		4
-42	MS21906D4		.CROSS		1
-43	41A-75202-26		.LINE ASSY - BRAKE PRESSURE		1
-44	41A-75202-22		.LINE ASSY - BRAKE PRESSURE		1
-45	41A-75202-24		.LINE ASSY - BRAKE PRESSURE		1
-46	316-4-8		.CLIP - (V00502)		1
	MS27039-1-03		.SCREW		1
	AN960PD10L		.WASHER		1
-47	MS21905D4		.TEE		1
-48	41A-75202-20		.LINE ASSY - BRAKE PRESSURE		1
-49	41A-75202-18		.LINE ASSY - BRAKE PRESSURE		1
-50	AE7010010E0135		.HOSE ASSY - (IAW C-12-114-000/CF-431)		4
-51	41A-75202-42	*	.LINE ASSY - LH BRAKE PRESSURE (PORT)		1
-52	41A-75202-48	*	.LINE ASSY - RH BRAKE PRESSURE (PORT)		1
-53	41A-75202-44	*	.LINE ASSY - LH BRAKE PRESSURE (STBD)		1
-54	41A-75202-50	*	.LINE ASSY - RH BRAKE PRESSURE (STBD)		1
-55	316-4-8		.CLIP - (V00502) (FS 149)		4
	NAS623-3-3		.SCREW		2
	AN960PD10L		.WASHER		2
	MS21042L3		.NUT		1
-56	41A-75202-46	*	.LINE ASSY - LH BRAKE PRESSURE (PORT)		1
-57	41A-75202-52	*	.LINE ASSY - RH BRAKE PRESSURE (STBD)		1
-58	41A-75202-8		.LINE ASSY - LH BRAKE PRESSURE (PORT)		1
-59	41A-75202-16		.LINE ASSY - RH BRAKE PRESSURE (STBD)		1
-60	MS21908D4		.ELBOW - (COCKPIT FLOOR)		2
	AN960PD716		.WASHER		2
	AN924-4D		.NUT		2
-61	41A-90232		LEVER - BRAKE CONTROL (SEE SECTION 7)		REF
-62	41A-90330		CABLE ASSY - PARKING BRAKE (SEE SECTION 7)		REF
-63	NAS6204-15D		BOLT - (SEE SECTION 7)		REF
-64	41A-90328		CABLE ASSY - PARKING BRAKE (SEE SECTION 7)		REF
			-000-		
		*	IAW C-12-114-000/CF-321		

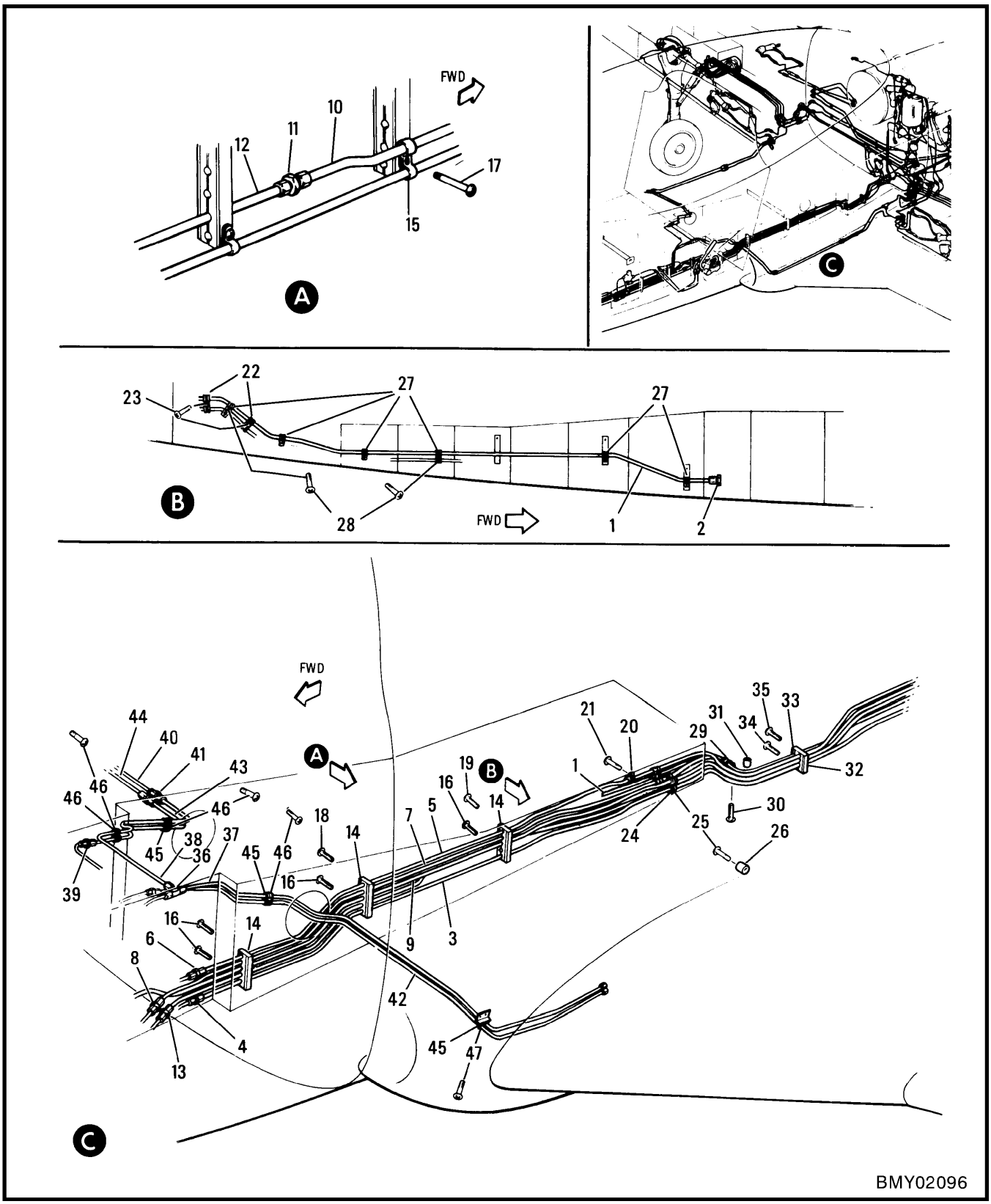

Figure 2-8-7 Fuselage Station 206-277 Hydraulic System

FIGURE AND INDEX NUMBER	GROUP HYDRAULIC SYSTEM MAJOR ASSEMBLY FUSELAGE STATION 206-277 HYDRAULIC SYSTEM PART NUMBER	1 2 3 4 5 6 7 NOMENCLATURE	EFFEC-TIVITY	UNITS PER ASSY
2-8-7 -	41A-42305	HYDRAULIC SYS INSTL - FS 206-277 (SEE FIG. 2-8-2)		NP
- 1	41A-42326-86	.LINE ASSY - PRESSURE		1
- 2	MS21916D6-4	.REDUCER - (PRESSURE LINE)		1
- 3	41A-42326-56	.LINE ASSY - RETURN		1
- 4	MS21902D6	.UNION - (RETURN LINE)		1
- 5	41A-42326-68	.LINE ASSY - NOSE LANDING GEAR UP		1
- 6	MS21916D6-4	.REDUCER - (N/GR UP LINE)		1
- 7	41A-42326-70	.LINE ASSY - NOSE LANDING GEAR DOWN		1
- 8	MS21916D6-4	.REDUCER - (N/GR DOWN LINE)		1
- 9	41A-42326-64	.LINE ASSY - HANDPUMP SUCTION		1
-10	41A-42326-88	.LINE ASSY - HANDPUMP PRESSURE		1
-11	MS21902D6	.UNION		1
-12	41A-42326-90	.LINE ASSY - HANDPUMP PRESSURE		1
-13	MS21916D6-4	.REDUCER - (HANDPUMP PRESSURE)		1
-14	41A-42318	.SUPPORT ASSY - LINE		3
-15	316-6-8	.CLIP		1
-16	NAS623-3-20	.SCREW		3
-17	NAS623-3-22	.SCREW		1
-18	NAS623-3-34	.SCREW		1
-19	NAS623-3-23	.SCREW		1
-20	316-6-8	.CLIP - (V00502) (FS 249)		1
-21	NAS623-3-2	.SCREW		1
-22	MS21919WDG5	.CLAMP		4
-23	NAS623-3-3	.SCREW		2
	AN960PD10L	.WASHER		2
	MS21042L3	.NUT		2
-24	316-6-8	.CLIP - (V00502) (FS 255)		4
-25	NAS623-3-16	.SCREW		1
-26	NAS43DD3-40	.SPACER		1
-27	316-6-8	.CLIP - (V00502)		8
-28	NAS623-3-3	.SCREW		2
	AN960PD10L	.WASHER		2
	MS21042L3	.NUT		2
-29	316-6-8	.CLIP - (V00502)		2
-30	NAS623-3-16	.SCREW		1
-31	NAS43DD3-46	.SPACER		1
	AN960PD10L	.WASHER		1
	MS21042L3	.NUT		1
-32	41A-42319	.SUPPORT ASSY - LINE		1
-33	41A-75405	.BRACKET ASSY - LINE SUPPORT		1
-34	NAS623-3-32	.SCREW		1
	AN960PD10	.WASHER		1
	MS21042L3	.NUT		1
-35	NAS623-3-30	.SCREW		1
-36	MS21905D4	.TEE - (EMERGENCY LDG/GR DOWN)		1
-37	41A-42326-38	.LINE ASSY - EMERGENCY LDG/GR DOWN		1
-38	41A-42326-74	.LINE ASSY - EMERGENCY LDG/GR DOWN		1
-39	MS21902D4	.UNION - (EMERGENCY LDG/GR DOWN)		1
-40	41A-42326-78	.LINE ASSY - EMERGENCY LDG/GR DOWN		1
-41	MS21902D4	.UNION - (FS 208 & 209 BRAKE LINE)		2
-42	41A-42326-44	.LINE ASSY - LH BRAKE		1
-43	41A-42326-76	.LINE ASSY - RH BRAKE		1
	MS21902D4	.UNION - (RH BRAKE LINE)		1
-44	41A-42326-80	.LINE ASSY - RH BRAKE		1
-45	316-4-8	.CLIP - (V00502) (BRAKE LINE RETAINING)		10
-46	NAS623-3-3	.SCREW		3
-47	NAS623-3-19	.SCREW		1
	AN960PD10L	.WASHER		1
	MS21042L3	.NUT		1
		-000-		

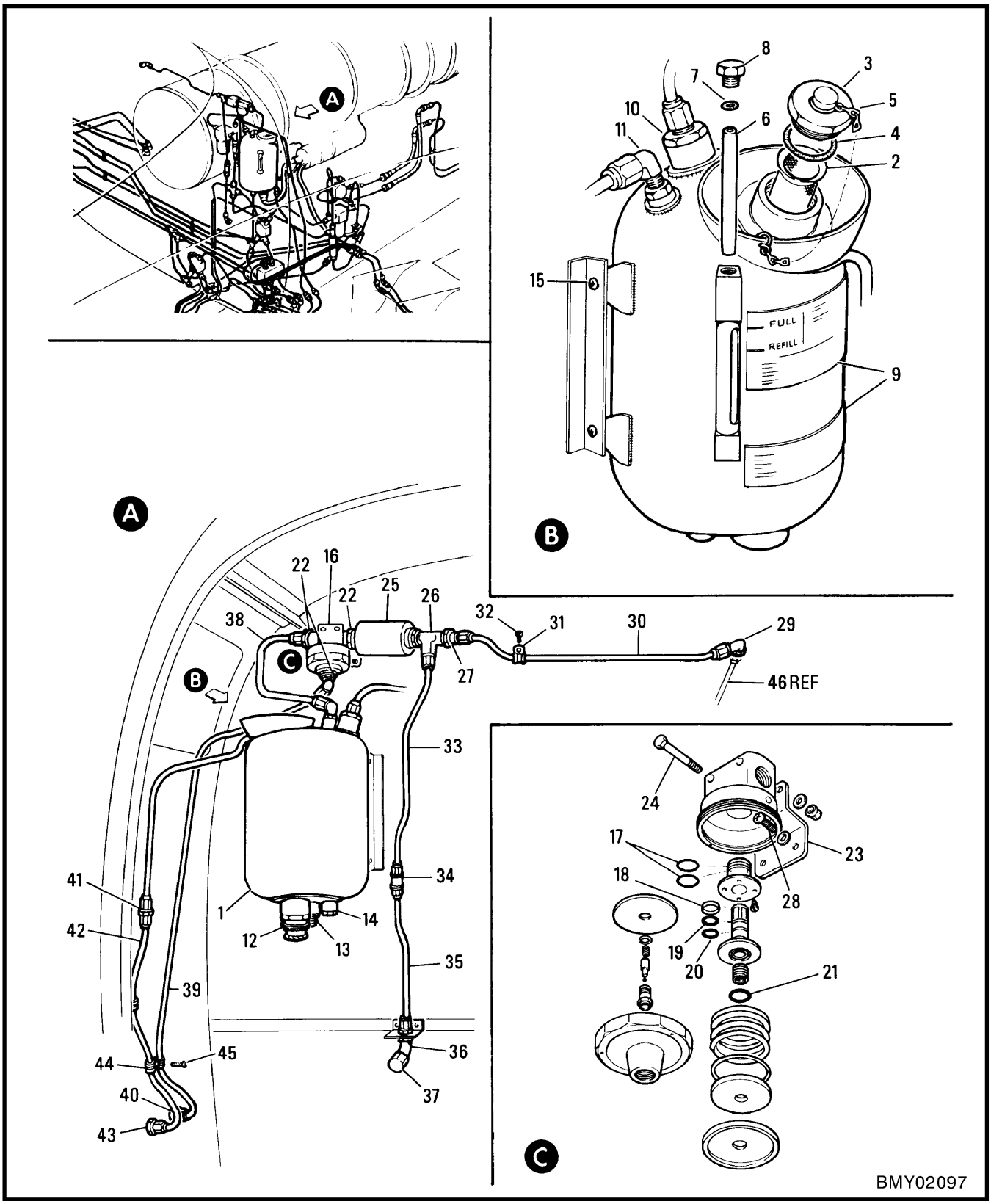

Figure 2-8-8 Engine Compartment Hydraulic System

FIGURE AND INDEX NUMBER	GROUP HYDRAULIC SYSTEM MAJOR ASSEMBLY ENGINE COMPARTMENT HYDRAULIC SYSTEM PART NUMBER		1 2 3 4 5 6 7 NOMENCLATURE	EFFEC-TIVITY	UNITS PER ASSY
2-8-8 -	41A-42302		HYDRAULIC SYS INSTL - ENGINE COMPARTMENT (SEE FIG. 2-8-2)		NP
	41A-75124-800		.RESERVOIR GENL ASSY - MAIN HYDRAULIC		1
	41A-75023-800		..RESERVOIR ASSY - MAIN HYDRAULIC		1
- 1	41A-75023-4		...RESERVOIR ASSY - MAIN HYDRAULIC		1
- 2	41A-75403		...STRAINER ASSY - HYDRAULIC RESERVOIR		1
- 3	41A-75257-2		...CAP - HYDRAULIC RESERVOIR FILLER		1
- 4	MS28778-20		...PACKING		1
	41A-75404		...CHAIN ASSY - HYD RESERVOIR FILLER CAP		1
- 5	S1192-2-7		....CHAIN - (V88308)		1
	41A-75404-2		....RING - CHAIN		1
	41A-75404-4		....RING - CHAIN		1
- 6	41A-75258		...TUBE - HYD RESERVOIR SIGHT GAUGE		1
- 7	MS28775-110		...PACKING		2
- 8	41A-75023-6		...PLUG - (MADE FROM AN814-5D)		1
	MS28778-5		...PACKING		1
- 9	41A-75259		...NAMEPLATE - HYD RESERVOIR FILLING INSTRUCTION		1
	S1043M		...NAMEPLATE - (V88308)		1
-10	MS21916D8-6		..REDUCER - (RETURN)		1
	MS28778-8		..PACKING		1
-11	MS21908-4		..ELBOW		1
	AN6289D4		..NUT		1
	MS28778-4		..PACKING		1
	MS9058-04		..RING		1
-12	375211-16		..COUPLING ASSY - (V69705) (PUMP SUCTION)		1
	MS28778-16		..PACKING		1
-13	MS21902D6		..UNION - (HANDPUMP SUCTION)		1
	MS28778-6		..PACKING		1
-14	MS9015-04		..PLUG		1
	MS28778-4		..PACKING		1
-15	NAS623-3-66		.SCREW		2
	41A-75105-800		.REGULATOR & FILTER ASSY - AIR PRESSURE		1
-16	HR2002-1	*	..VALVE ASSY - (V73760) (AIR PRESS. REGULATOR) (FOR BKDN C-13-423-000/MX-000)		1
-17	HS109-016	*	...PACKING - (V73760)		2
-18	60115M	*	...PACKING - (V73760)		1
-19	63224A	*	...PACKING - (V73760)		1
-20	HS109-012	*	...PACKING - (V73760)		1
-21	HS109-015	*	...PACKING - (V73760)		1
-22	MS21916D6-4	*	..REDUCER		3
	MS28775-111	*	..PACKING		3
	MS28775-110	*	..PACKING		1
-23	NO NUMBER	*	..BRACKET		1
-24	NAS1103-18	*	..BOLT		2
	AN960PD10	*	..WASHER		4
	MS21042L3	*	..NUT		2
-25	700040		..FILTER ASSY - AIR (V35076)		1
R	800111		...ELEMENT - (V35076), OR		1
R	50064-2		...ELEMENT - (V94592)		1
	50065-1		...SPRING - (V35076)		1
R	810191		...GASKET - (V35076) (REPLACES 10191 PER ECN 1835)		1
	MS28778-20		...PACKING		1
-26	MS21911-4		..TEE		1
	AN6289D4		..NUT		1
	MS28778-4		..PACKING		1
	MS9058-04		..RING		1
-27	277A4EE		..VALVE ASSY - (V91816) (CHECK)		1
	MS28778-4		..PACKING		1
-28	NAS623-3-3	*	.SCREW		2
	AN960PD10	*	.WASHER		2
-29	MS21908D4		.ELBOW - (FS 277 RESERVOIR PRESSURIZATION)		1
	AN960PD716		.WASHER		1
	AN924-4		.NUT		1
		*	IAW C-12-114-000/CF-456		

FIGURE AND INDEX NUMBER	GROUP HYDRAULIC SYSTEM MAJOR ASSEMBLY ENGINE COMPARTMENT HYDRAULIC SYSTEM PART NUMBER		1 2 3 4 5 6 7 NOMENCLATURE	EFFEC-TIVITY	UNITS PER ASSY
2-8-8 -30	41A-42333-4		.LINE ASSY - MAIN RESERVOIR PRESSURIZATION		1
-31	MS21919WH4		.CLAMP		1
-32	NAS623-3-2		.SCREW		1
	AN960PD10L		.WASHER		1
	MS21042L3		.NUT		1
-33	41A-42333-12		.LINE ASSY - MAIN RESERVOIR PRESSURIZATION		1
-34	1112-589976		.VALVE ASSY - (V92003) (CHECK)		1
-35	41A-42333-14		.LINE ASSY - MAIN RESERVOIR PRESSURIZATION		1
-36	MS21907D4		.ELBOW		1
	AN960PD716		.WASHER		1
	AN924-4		.NUT		1
-37	MS21914-4		.CAP		1
-38	NO NUMBER	*	.LINE ASSY - MAIN RESERVOIR PRESSURIZATION		1
-39	41A-42333-16		.LINE ASSY - RESERVOIR PRESSURIZATION VENT		1
-40	MS21924D4		.UNION - (VENT)		1
	AN960PD716		.WASHER		1
	AN924-4		.NUT		1
-41	MS21902D4		.UNION - (RESERVOIR OVERFLOW LINE)		1
-42	41A-42333-58		.LINE ASSY - RESERVOIR OVERFLOW		1
-43	MS21924D4		.UNION - (OVERFLOW LINE)		1
	AN960PD716		.WASHER		1
	AN924-4		.NUT		1
-44	MS21919WH4		.CLAMP		4
-45	MS35206-245		.SCREW		2
	AN960PD8L		.WASHER		2
	MS21042L08		.NUT		2
-46	41A-95218-14		LINE ASSY - MAIN RESERVOIR PRESSURIZATION (SEE SECTION 9)		REF
			-000-		
		*	IAW C-12-114-000/CF-456		

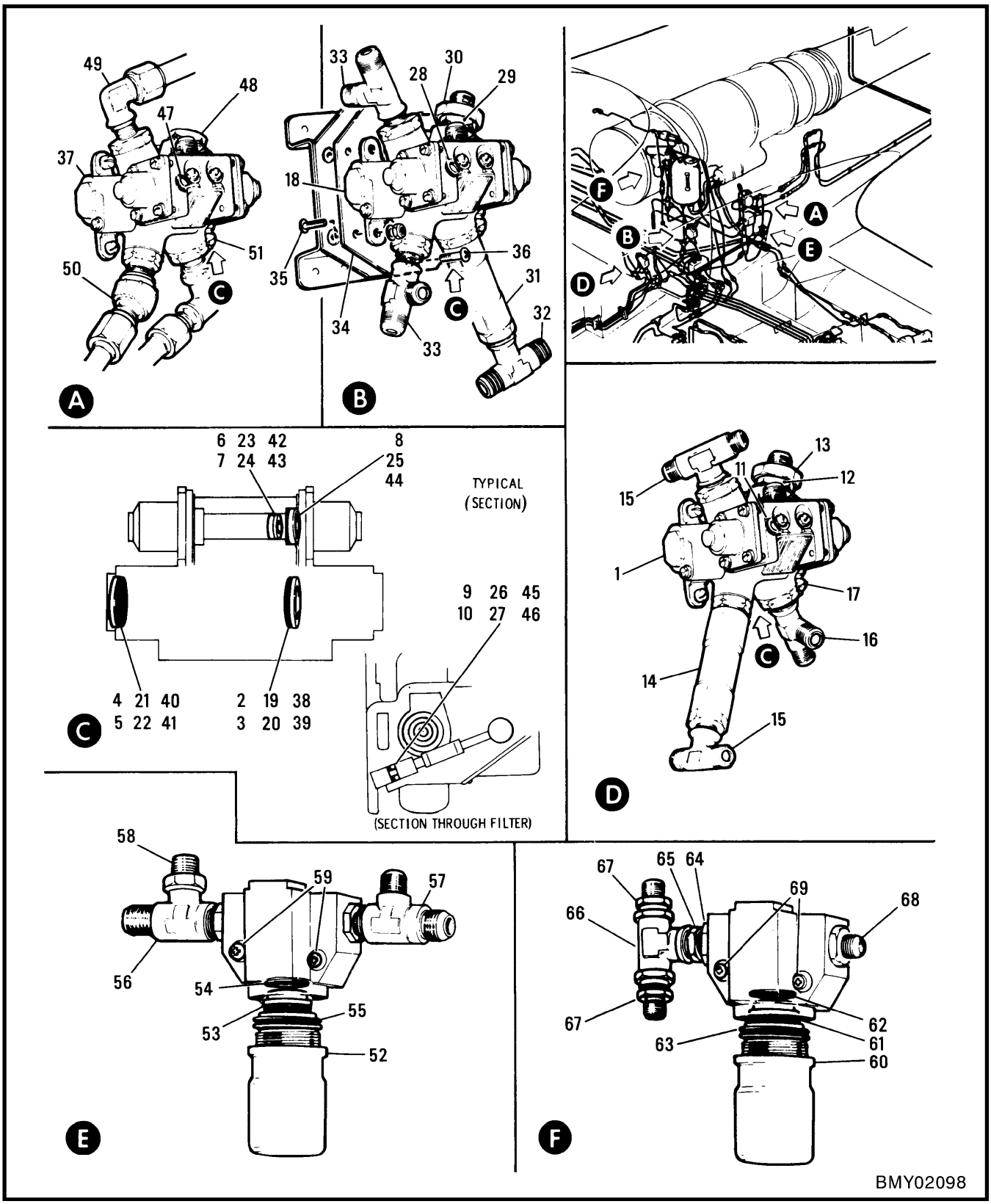

Figure 2-8-9 Engine Compartment Hydraulic Valves & Filters

FIGURE AND INDEX NUMBER	GROUP HYDRAULIC SYSTEM MAJOR ASSEMBLY ENGINE COMPARTMENT HYDRAULIC VALVES & FILTERS PART NUMBER	1 2 3 4 5 6 7 NOMENCLATURE	EFFEC-TIVITY	UNITS PER ASSY
2-8-9 -	41A-42302	HYDRAULIC SYS INSTL - ENGINE COMPARTMENT (SEE FIG. 2-8-8)		REF
	41A-75102-6	.VALVE ASSY - LANDING GEAR SELECTOR		1
- 1	362-0377	..VALVE ASSY - (V36164) (SOLENOID OPERATED 4 WAY SELECTOR) (IAW 41A-75005) (FOR BKDN SEE C-13-722-000/MS-000)		1
- 2	MS28775-016	...PACKING		6
- 3	MS28774-016	...RETAINER		6
- 4	MS28775-114	...PACKING		2
- 5	MS28774-114	...RETAINER		2
- 6	MS28775-010	...PACKING		4
- 7	MS28774-010	...RETAINER		4
- 8	MS28775-014	...PACKING		2
- 9	MS28775-008	...PACKING		1
-10	MS28774-007	...RETAINER		1
-11	MS28775-006	...PACKING		4
-12	1112-589977	..VALVE ASSY - (V92003) (CHECK)		1
-13	MS21902D6	..UNION		1
	MS28778-6	..PACKING		2
-14	2R2065-3	..RESTRICTOR ASSY - (V26044)		1
-15	MS21909D6	..TEE		2
-16	MS21912D6	..TEE		1
	AN6289D6	..NUT		3
	MS28778-6	..PACKING		3
	MS9058-06	..RING		3
-17	NAS623-3-7	.SCREW		4
	NAS43DD3-16	.SPACER		4
	AN960PD10L	.WASHER		4
	41A-75102-800	.VALVE ASSY - M/LDG/GR DOOR SELECTOR		1
-18	362-0377	..VALVE ASSY - (V36164) (SOLENOID OPERATED 4 WAY SELECTOR) (IAW 41A-75005) (FOR BKDN SEE C-13-722-000/MS-000)		1
-19	MS28775-016	...PACKING		6
-20	MS28774-016	...RETAINER		6
-21	MS28775-114	...PACKING		2
-22	MS28774-114	...RETAINER		2
-23	MS28775-010	...PACKING		4
-24	MS28774-010	...RETAINER		4
-25	MS28775-014	...PACKING		2
-26	MS28775-008	...PACKING		1
-27	MS28774-007	...RETAINER		1
-28	MS28775-006	...PACKING		4
-29	1112-589977	..VALVE ASSY - (V92003) (CHECK)		1
-30	MS21902D6	..UNION		1
	MS28778-6	..PACKING		2
-31	2R2065-5	..RESTRICTOR ASSY - (V26044)		1
-32	MS21909D6	..TEE		1
-33	MS21912D6	..TEE		2
	AN6289D6	..NUT		3
	MS28778-6	..PACKING		3
	MS9058-06	..RING		3
-34	41A-42339-10	..PLATE - BRACKET MOUNTING		1
-35	NAS623-3-2	..SCREW		4
	AN960PD10L	..WASHER		4
	MS21042L3	..NUT		4
-36	MS35207-262	.SCREW		2
	AN960PD10L	.WASHER		2
	41A-75102-2	.VALVE ASSY - SPEED BRAKE SELECTOR		1
-37	362-0377	..VALVE ASSY - (V36164) (SOLENOID OPERATED 4 WAY SELECTOR) (IAW 41A-75005) (FOR BKDN SEE C-13-722-000/MS-000)		1
-38	MS28775-016	...PACKING		6
-39	MS28774-016	...RETAINER		6
-40	MS28775-114	...PACKING		2
-41	MS28774-114	...RETAINER		2

FIGURE AND INDEX NUMBER	GROUP HYDRAULIC SYSTEM MAJOR ASSEMBLY ENGINE COMPARTMENT HYDRAULIC VALVES & FILTERS PART NUMBER	1 2 3 4 5 6 7 NOMENCLATURE	EFFEC-TIVITY	UNITS PER ASSY
2-8-9 -42	MS28775-010	...PACKING		4
-43	MS28774-010	...RETAINER		4
-44	MS28775-014	...PACKING		2
-45	MS28775-008	...PACKING		1
-46	MS28774-007	...RETAINER		1
-47	MS28775-006	...PACKING		4
-48	1112-589977	..VALVE ASSY - (V92003) (CHECK)		1
	MS28778-6	..PACKING		1
-49	MS21908D6	..ELBOW		2
-50	ER837-0608	..ELBOW - (V96313)		1
	AN6289D4	..NUT		1
	MS28778-6	..PACKING		1
	MS9058-06	..RING		1
-51	NAS623-3-2	.SCREW		4
	AN960PD10L	.WASHER		4
	41A-75107-800	.FILTER ASSY - MAIN PRESSURE		1
-52	702000	..FILTER ASSY - (V35076) (HYDRAULIC OIL) (IAW 41A-75022) (FOR BKDN SEE C-13-724-000/MS-000)		1
-53	701004	...ELEMENT ASSY - (V35076)		1
-54	MS28775-116	...PACKING		1
-55	MS28775-224	...PACKING		1
	MS28774-224	...RETAINER		1
-56	MS21910D8	..TEE		1
-57	ER804-080606	..TEE - (V96313)		1
	AN6289D8	..NUT		2
	MS28778-8	..PACKING		2
	MS9058-08	..RING		2
-58	MS21902-8	..UNION		1
	MS28778-8	..PACKING		1
-59	NAS623-3-31	.SCREW		2
	NAS43DD3-37	.SPACER		2
	AN960PD10	.WASHER		6
-60	702000	.FILTER ASSY - (V35076) (HYD)		1
-61	701004	.ELEMENT ASSY - (V35076)		1
-62	MS28775-116	.PACKING		1
-63	MS28775-224	.PACKING		1
	MS28774-224	.RETAINER		1
-64	AN893-12D	.BUSHING		1
	MS28778-8	.PACKING		1
-65	MS21924D6	.UNION		1
	AN6289D6	.NUT		1
	MS28778-6	.PACKING		2
	MS9058-06	.RING		1
-66	AN938D6	.TEE		1
-67	112-589977	.VALVE ASSY - (V92003) (CHECK)		2
	MS28778-6	.PACKING		2
-68	MS21916D8-6	.REDUCER		1
	MS28778-8	.PACKING		1
-69	NAS623-3-31	.SCREW		2
	NAS43-3-37	.SPACER		2
	AN960PD10	.WASHER		6
		-000-		

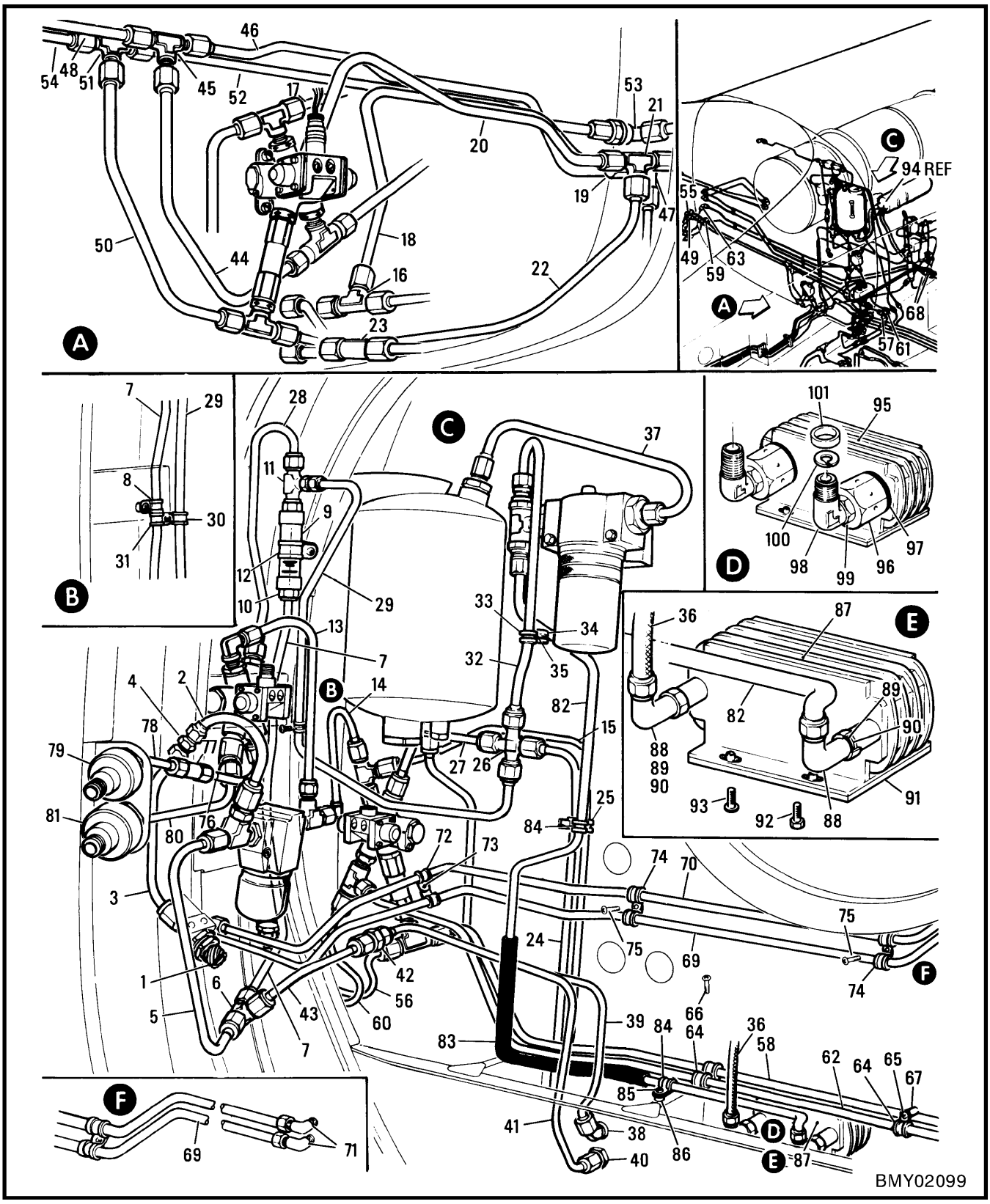

Figure 2-8-10 Engine Compartment Hydraulic System

FIGURE AND INDEX NUMBER	GROUP HYDRAULIC SYSTEM MAJOR ASSEMBLY ENGINE COMPARTMENT HYDRAULIC SYSTEM PART NUMBER		1 2 3 4 5 6 7 NOMENCLATURE	EFFEC-TIVITY	UNITS PER ASSY
2-8-10 -	41A-42302		HYDRAULIC SYS INSTL - ENGINE COMPARTMENT (SEE FIG. 2-8-8)		REF
- 1	3302-8		.COUPLING ASSY - (V69705)		1
	AN960PD1216		.WASHER		1
	AN924-8		.NUT		1
- 2	41A-42333-950		.LINE ASSY - PRESSURE		1
- 3	41A-42333-952		.LINE ASSY - PRESSURE		1
- 4	1112-589978R		.VALVE ASSY - (V92003) (CHECK)		1
- 5	41A-42333-74		.LINE ASSY - PRESSURE		1
- 6	MS21905-8		.TEE		1
- 7	41A-42333-328		.LINE ASSY - PRESSURE		1
- 8	MS21919WH8		.CLAMP		1
	NAS623-3-12		.SCREW		1
	NAS43DD3-40		.SPACER		1
	AN960PD10		.WASHER		1
	MS21042L3		.NUT		1
	41A-75106		.VALVE ASSY - MAIN SYS PRESSURE RELIEF		1
- 9	HP457100-1900		..VALVE ASSY - (V84685) (PRESSURE RELEASE) (IAW 41A-75016) FOR BRKDN SEE C-13-683-000/MS-000		1
	MS28775-008	*	...PACKING		1
	MS28775-112	*	...PACKING		1
	MS28774-112	*	...RETAINER		2
	MS28775-111	*	...PACKING		1
	MS28774-111	*	...RETAINER		1
-10	MS21902D8		..UNION		1
	MS28778-8		..PACKING		1
-11	ER804-08-06-06		..TEE - (V96313)		1
	AN6289D8		..NUT		1
	MS28778-8		..PACKING		1
	MS9058-08		..RING		1
-12	MS21919WH16		.CLAMP		1
	NAS623-3-2		.SCREW		1
	MS21042L3		.NUT		1
-13	41A-42333-62		.LINE ASSY - PRESSURE		1
-14	41A-42333-56		.LINE ASSY - PRESSURE		1
-15	41A-42333-100		.LINE ASSY - PRESSURE		1
-16	MS21912D6		.TEE - (PRESSURE)		1
	AN960PD916		.WASHER		1
	AN924-6		.NUT		1
-17	41A-42333-82		.LINE ASSY - PRESSURE		1
-18	41A-42333-302		.LINE ASSY - PRESSURE		1
-19	MS21924D6		.UNION - (PRESSURE)		1
	AN960PD916		.WASHER		1
	AN924-6		.NUT		1
-20	41A-42333-92		.LINE ASSY - RETURN		1
-21	MS21912D6		.TEE - (RETURN)		1
	AN960PD916		.WASHER		1
	AN924-6		.NUT		1
-22	41A-42333-94		.LINE ASSY - RETURN		1
-23	MS21912D6		.TEE - (RETURN)		1
	AN960PD916		.WASHER		1
	AN924-6		.NUT		1
-24	41A-42333-32		.LINE ASSY - RETURN		1
R -25	MS21919WH6		.CLAMP, OR		2
R	MS21919WCJ6		.CLAMP		2
	NAS623-3-12		.SCREW		1
	NAS43DD3-35		.SPACER		1
-26	MS21906D6		.CROSS - (RETURN)		1
-27	41A-42333-30		.LINE ASSY - RETURN		1
-28	41A-42333-326		.LINE ASSY - RETURN		1
-29	41A-42333-324		.LINE ASSY - RETURN		1
-30	MS21919WH6		.CLAMP		1
		*	SUPPLIED AS PARTS OF HP457100-1900 VALVE		

FIGURE AND INDEX NUMBER	GROUP HYDRAULIC SYSTEM MAJOR ASSEMBLY ENGINE COMPARTMENT HYDRAULIC SYSTEM PART NUMBER	1 2 3 4 5 6 7 NOMENCLATURE	EFFEC-TIVITY	UNITS PER ASSY
2-8-10 -31	MS21919WH8	.CLAMP		1
	NAS623-3-3	.SCREW		1
	AN960PD10	.WASHER		1
	MS21042L3	.NUT		1
-32	41A-42333-20	.LINE ASSY - RETURN		1
-33	MS21919WH6	.CLAMP		1
-34	MS21919WH4	.CLAMP		1
-35	MS35206-245	.SCREW		1
	AN960PD8L	.WASHER		1
	MS21042L08	.NUT		1
-36	AE1002256G0233	.HOSE ASSY - (V69705) (ENGINE PUMP BY-PASS)		1
-37	41A-42333-18	.LINE ASSY - RETURN (IAW C-12-114-000/CF-436)		1
-38	MS21907D6	.ELBOW - (HANDPUMP SUCTION)		1
	AN960PD916	.WASHER		1
	AN924-6	.NUT		1
-39	41A-42333-44	.LINE ASSY - HANDPUMP SUCTION		1
-40	MS21924-6	.UNION - (HANDPUMP PRESSURE)		1
	AN960PD916	.WASHER		1
	AN924-6	.NUT		1
-41	41A-42333-98	.LINE ASSY - HANDPUMP PRESSURE		1
-42	MS21916-8-6	.REDUCER		1
-43	41A-42333-76	.LINE ASSY - HANDPUMP PRESSURE		1
-44	41A-42333-84	.LINE ASSY - MAIN LANDING GEAR UP		1
-45	MS21905D6	.TEE - (LDG/GR UP)		1
-46	41A-42333-86	.LINE ASSY - M/LDG/GR UP TO PORT WING		1
-47	MS21908-6	.ELBOW - (LDG/GR UP PORT)		1
	AN960PD916	.WASHER		1
	AN924-6	.NUT		1
-48	41A-42333-50	.LINE ASSY - M/LDG/GR UP TO STBD WING		1
-49	MS21907-6	.ELBOW - (LDG/GR UP STBD)		1
	AN960PD916	.WASHER		1
	AN924-6	.NUT		1
-50	41A-42333-88	.LINE ASSY - MAIN LANDING GEAR DOWN		1
-51	MS21905D6	.TEE - (LDG/GR DOWN)		1
-52	41A-42333-90	.LINE ASSY - M/LDG/GR DOW N TO PORT WING		1
-53	MS21908-6	.ELBOW - (LDG/GR DOWN PORT)		1
	AN960PD916	.WASHER		1
	AN924-6	.NUT		1
-54	41A-42333-52	.LINE ASSY - M/LDG/GR DOWN TO STBD WING		1
-55	MS21908-6	.ELBOW - (LDG/GR DOWN STBD)		1
	AN960PD916	.WASHER		1
	AN924-6	.NUT		1
-56	41A-42333-38	.LINE ASSY - M/LDG/GR DOOR UP TO PORT WING		1
-57	MS21908-6	.ELBOW - (LDG/GR DOOR UP PORT)		1
	AN960PD916	.WASHER		1
	AN924-6	.NUT		1
-58	41A-42333-40	.LINE ASSY - M/LDG/GR DOOR UP TO STBD WING		1
-59	MS21908-6	.ELBOW - (LDG/GR DOOR UP STBD)		1
	AN960PD916	.WASHER		1
	AN924-6	.NUT		1
-60	41A-42333-34	.LINE ASSY - (MLG DOOR DOWN TO PORT WING)		1
-61	MS21908-6	.ELBOW - (LDG/GR DOOR DOWN PORT)		1
	AN960PD916	.WASHER		1
	AN924-6	.NUT		1
-62	41A-42333-36	.LINE ASSY - (MLG DOOR DOWN TO STBD WING)		1
-63	MS21907-6	.ELBOW - (LDG/GR DOOR DOWN STBD)		1
-	AN960PD916	.WASHER		1
	AN924-6	.NUT		1
-64	MS21919WH6	.CLAMP		4
-65	NAS623-3-2	.SCREW		1
	AN960PD10L	.WASHER		1
-66	NAS623-2-2	.SCREW		1
	AN960PD8L	.WASHER		1
-67	NAS43-3-32	.SPACER		1

FIGURE AND INDEX NUMBER	GROUP HYDRAULIC SYSTEM MAJOR ASSEMBLY ENGINE COMPARTMENT HYDRAULIC SYSTEM PART NUMBER	1 2 3 4 5 6 7 NOMENCLATURE	EFFEC-TIVITY	UNITS PER ASSY
2-8-10 - 68	MS21912D6	.TEE - (FLAP UP & DOWN LINE PORT)		2
	AN960PD916	.WASHER		2
	AN924-6	.NUT		2
- 69	41A-42333-48	.LINE ASSY - FLAP UP TO STBD WING		1
- 70	41A-42333-46	.LINE ASSY - FLAP DOWN TO STBD WING		1
- 71	MS21908-6	.ELBOW - (FLAP UP & DOWN LINE STBD)		2
	AN960PD916	.WASHER		2
	AN924-6	.NUT		2
- 72	MS21919WH6	.CLAMP		2
- 73	MS35206-245	.SCREW		1
	AN960PD8L	.WASHER		1
	MS21042L08	.NUT		1
- 74	MS21919WH6	.CLAMP		4
- 75	NAS623-3-16	.SCREW		2
	AN960PD10L	.WASHER		2
	NAS43DD3-48	.SPACER		2
- 76	41A-42333-64	.LINE ASSY - SPEED BRAKE OPEN		1
- 77	462W4098	.RESTRICTOR - (V92003)		1
- 78	41A-42333-66	.LINE ASSY - SPEED BRAKE OPEN		1
- 79	3300-6	.COUPLING ASSY - (V69705)		1
	AN960PD916	.WASHER		1
	AN924-6	.NUT		1
- 80	41A-42333-72	.LINE ASSY - SPEED BRAKE CLOSE		1
- 81	3300-8	.COUPLING ASSY - (V69705)		1
	AN960PD1216	.WASHER		1
	AN924-8	.NUT		1
- 82	41A-42333-22	.LINE ASSY - HEAT EXCHANGER		1
- 83	NO NUMBER	.CASING - PROTECTIVE (IAW C-12-114-000/CF-331)		1
- 84	MS21919WH6	.CLAMP		2
- 85	NAS623-3-12	.SCREW		1
- 86	NAS43DD3-35	.SPACER		1
	41A-75129	.COOLER ASSY - HYDRAULIC OIL (FOR SPARES ORDER 41A-75129-800)		1
- 87	8406F	..COOLER ASSY - (V57733) (OIL)		1
- 88	ER833D0806	..REDUCER - (V96313)		2
- 89	MS9058-08	..RING		2
- 90	S1422-8	..PACKING - (V88308)		2
	AN6289D8	..NUT		2
- 91	41A-75272	.GASKET - HEAT EXCHANGER		1
- 92	AN3-6	.BOLT		2
- 93	NAS623-3-6	.SCREW		2
- 94	41A-42332	PUMP ASSY - ENGINE DRIVEN HYDRAULIC (SEE SECTION 5)		REF
	41A-75129-800	COOLER ASSY - HYDRAULIC OIL (SPARE FOR 41A-75129)		1
- 95	8406L	.COOLER - (V57733) (OIL)		1
- 96	AN893-13D	.REDUCER		2
- 97	MS28778-12	.PACKING		2
- 98	MS21926D6	.ELBOW		2
- 99	AN6289D6	.NUT		2
-100	MS9058-06	.RING		2
-101	MS28778-6	.PACKING		2
		-000-		

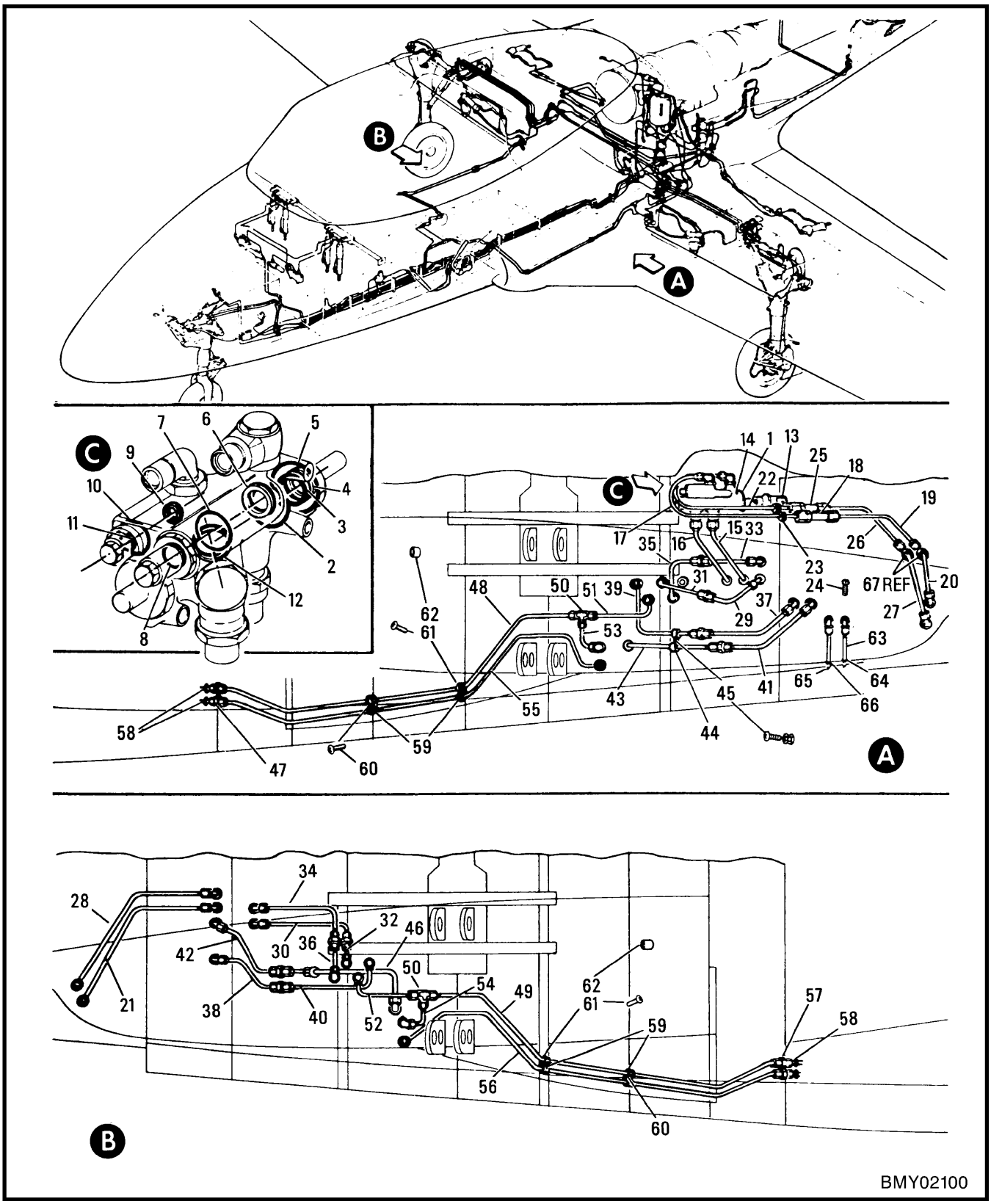

Figure 2-8-11 Wing Fillet Hydraulic System

FIGURE AND INDEX NUMBER	GROUP HYDRAULIC SYSTEM MAJOR ASSEMBLY WING FILLET HYDRAULIC SYSTEM PART NUMBER	1 2 3 4 5 6 7 NOMENCLATURE	EFFEC-TIVITY	UNITS PER ASSY
2-8-11 -	41A-90851	FOLLOW UP SYSTEM MECHANISM INSTL - FLAP (SEE SECTION 7)		REF
	41A-75103	.VALVE ASSY - FLAP SELECT		1
		OR		
- 1	3293000-1	..VALVE ASSY - (V35962) (METERING) (IAW 41A-75021) (FOR BKDN SEE C-13-503-000/MS-000)		1
- 2	MS28775-017	...PACKING		4
- 3	MS28775-111	...PACKING		2
	MS28774-111	...RETAINER		2
- 4	3293019-1	...WIPER - (V35962) (FELT)		2
- 5	MS28775-118	...PACKING		2
- 6	MS28775-111	...PACKING		1
	MS28774-111	...RETAINER		1
- 7	MS28775-018	...PACKING		1
- 8	MS28775-011	...PACKING		1
- 9	MS28775-010	...PACKING		1
	MS28774-010	...RETAINER		1
-10	MS28775-015	...PACKING		3
-11	MS28775-009	...PACKING		1
-12	MS28775-014	...PACKING		5
	MS28774-014	...RETAINER		1
-13	41A-90864	..FORK END - FLAP FOLLOW UP VALVE		1
	NAS509-6	..NUT		1
-14	NAS623-3-34	.SCREW		3
	NAS43DD3-24	.SPACER		3
	AN960PD10	.WASHER		3
	41A-42323	HYDRAULIC SYS INSTL - WING FILLET (SEE FIG. 2-8-2)		NP
-15	41A-42324-76	.LINE ASSY - FLAP SEL VALVE PRESS. (PORT)		1
-16	41A-42324-74	.LINE ASSY-FLAP SELECTOR VALVE RETURN (PORT)		1
-17	41A-42324-84	.LINE ASSY - FLAP UP SELECTOR VALVE TO UNION (PORT)		1
-18	2R2065-12	.RESTRICTOR - (V26044) (PORT)		1
	MS21902D6	.UNION - (PORT)		2
	S1422-6	.PACKING - (V88308) (PORT)		2
-19	41A-42324-70	.LINE ASSY - UNION TO TEE FLAP UP (PORT)		1
-20	41A-42324-2	.LINE ASSY - FLAP UP (PORT)		1
-21	41A-42324-32	.LINE ASSY - FLAP UP (STBD)		1
-22	41A-42324-78	.LINE ASSY - SELECTOR VALVE TO RESTRICTOR FLAP DOWN (PORT)		1
-23	MS21919WDG6	.CLAMP		2
-24	MS35207-265	.SCREW		1
	AN960PD10L	.WASHER		1
	MS21042L3	.NUT		1
-25	2R2065-14	.RESTRICTOR - (V26044) (PORT)		1
	MS21902D6	.UNION - (PORT)		2
	S1422-6	.PACKING - (V88308) (PORT)		2
-26	41A-42324-80	.LINE ASSY - RESTRICTOR TO TEE FLAP DOWN (PORT)		1
-27	41A-42324-4	.LINE ASSY - FLAP DOWN (PORT)		1
-28	41A-42324-34	.LINE ASSY - FLAP DOWN (STBD)		1
-29	41A-42324-6	.LINE ASSY - MAIN LANDING GEAR UP (PORT)		1
-30	41A-42324-38	.LINE ASSY - MAIN LANDING GEAR UP (STBD)		1
	MS21916D6-4	.REDUCER - (LDG/GR UP)		2
-31	41A-42324-66	.LINE ASSY - MAIN LANDING GEAR UP (PORT)		1
-32	41A-42324-42	.LINE ASSY - MAIN LANDING GEAR UP (STBD)		1
-33	41A-42324-8	.LINE ASSY - MAIN LANDING GEAR DOWN (PORT)		1
-34	41A-42324-36	.LINE ASSY - MAIN LANDING GEAR DOWN (STBD)		1
	MS21916D6-4	.REDUCER - (LDG/GR DOWN)		2
-35	41A-42324-64	.LINE ASSY - MAIN LANDING GEAR DOWN (PORT)		1
-36	41A-42324-40	.LINE ASSY - MAIN LANDING GEAR DOWN (STBD)		1
-37	41A-42324-18	.LINE ASSY - LANDING GEAR DOOR UP (PORT)		1
-38	41A-42324-54	.LINE ASSY - LANDING GEAR DOOR UP (STBD)		1
	MS21916D6-4	.REDUCER - (LDG/GR DOOR UP)		2
-39	41A-42324-22	.LINE ASSY - LANDING GEAR DOOR UP (PORT)		1
-40	41A-42324-58	.LINE ASSY - LANDING GEAR DOOR UP (STBD)		1

FIGURE AND INDEX NUMBER	GROUP HYDRAULIC SYSTEM MAJOR ASSEMBLY WING FILLET HYDRAULIC SYSTEM PART NUMBER	1 2 3 4 5 6 7 NOMENCLATURE	EFFEC-TIVITY	UNITS PER ASSY
2-8-11 -41	41A-42324-16	.LINE ASSY - LANDING GEAR DOOR DOWN (PORT)		1
-42	41A-42324-52	.LINE ASSY - LANDING GEAR DOOR DOWN (STBD)		1
	MS21916D6-4	.REDUCER - (LDG/GR DOOR DOWN)		2
-43	41A-42324-20	.LINE ASSY - LANDING GEAR DOOR DOWN (PORT)		1
-44	MS21919WDG4	.CLAMP		2
-45	MS35206-245	.SCREW		1
	AN960PD8L	.WASHER		1
	MS21042L08	.NUT		1
-46	41A-42324-56	.LINE ASSY - LANDING GEAR DOOR DOWN (STBD)		1
-47	MS21902D4	.UNION - (LDG/GR EMERGENCY DOWN)		2
-48	41A-42324-88	.LINE ASSY - LDG/GR EMERG ENCY DOWN (PORT)		1
-49	41A-42324-62	.LINE ASSY - LDG/GR EMERGENCY DOWN (STBD)		1
-50	MS21905D4	.TEE		2
-51	41A-42324-10	.LINE ASSY - LDG/GR EMERGENCY DOWN (PORT)		1
-52	41A-42324-60	.LINE ASSY - LDG/GR EMERGENCY DOWN (STBD)		1
-53	41A-42324-26	.LINE ASSY - LDG/GR DOOR EMERGENCY DOWN (PORT)		1
-54	41A-42324-46	.LINE ASSY - LDG/GR DOOR EMERGENCY DOWN (STBD)		1
-55	41A-42324-86	.LINE ASSY - BRAKE (PORT)		1
-56	41A-42324-44	.LINE ASSY - BRAKE (STBD)		1
-57	MS21902D4	.UNION - (BRAKE LINE)		2
-58	MS35489-8	.GROMMET - (FS 229)		4
-59	MS21919WDG4	.CLAMP - (FS 240 & 250)		8
-60	MS35206-245	.SCREW - (FS 240)		2
	AN960PD8L	.WASHER		2
	MS21042L08	.NUT		2
-61	MS35206-247	.SCREW - (FS 250)		2
-62	NAS43DD3-32	.SPACER		2
	AN960PD8L	.WASHER		2
-63	41A-42324-12	.LINE ASSY - RESERVOIR AIR VENT		1
-64	MS35489-6	.GROMMET		1
-65	41A-42324-14	.LINE ASSY - RESERVOIR OVERFLOW		1
-66	MS35489-11	.GROMMET		1
-67	MS21912D6	TEE - (FLAP UP & DOWN LINE PORT) (SEE FIG. 2-8-10)		REF

-000-

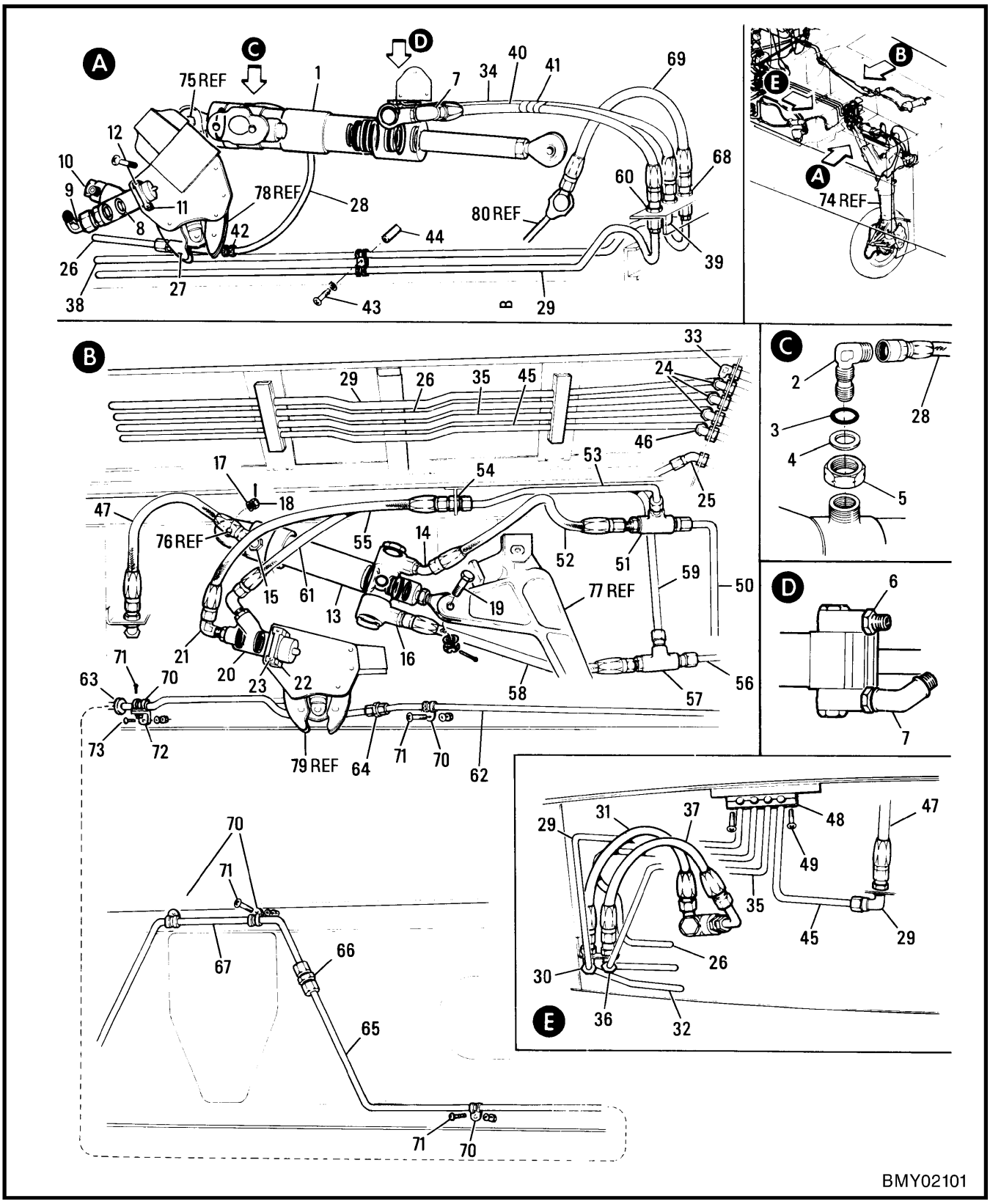

Figure 2-8-12 Main Landing Gear & Door Hydraulic System

FIGURE AND INDEX NUMBER	GROUP HYDRAULIC SYSTEM MAJOR ASSEMBLY MAIN LANDING GEAR & DOOR HYDRAULIC SYSTEM PART NUMBER		1 2 3 4 5 6 7 NOMENCLATURE	EFFEC-TIVITY	UNITS PER ASSY
2-8-12 -	41A-42301		HYDRAULIC SYS INSTL - MAIN LANDING GEAR & DOOR PORT (SEE SECTION 1)		NP
	41A-42301-1		HYDRAULIC SYS INSTL - MAIN LANDING GEAR & DOOR STBD		NP
	41A-75117-800	*	.ACTUATOR ASSY - MAIN GEAR PORT (FOR SPARES ORDER 41A-75117-806)		1
	41A-75117-806		.ACTUATOR ASSY - MAIN GEAR PORT (SPARE FOR 41A-75117-800)		
	41A-75117-801	*	.ACTUATOR ASSY - MAIN GEAR STBD (FOR SPARES ORDER 41A-75117-807)		1
	41A-75117-807		.ACTUATOR ASSY - MAIN GEAR STBD (SPARE FOR 41A-75117-801)		
- 1	3290000-9		..ACTUATOR ASSY - (V35962) (MAIN GEAR PORT) (IAW 41A-75002-806) (MOD) (FOR BKDN SEE C-13-499-000/MS-000)		1
	3290000-10		..ACTUATOR ASSY - (V35962) (MAIN GEAR STBD) (IAW 41A-75002-807) (MOD) (FOR BKDN SEE C-13-499-000/MS-000)		1
- 2	MS21926-4	**	..ELBOW		1
- 3	MS28778-04	**	..O-RING		1
- 4	MS9058-04	**	..RING		1
- 5	AN6289D4	**	..NUT		1
- 6	MS21902-4		..UNION		1
	MS28778-4		..PACKING - (V88308)		1
- 7	MS21907-4		..ELBOW		1
	AN6289D4		..NUT		1
	M83461/2-904		..PACKING - (V88308)		1
	MS28773-04		..RING		1
	AN960-716		.WASHER		1
	AN320-7		.NUT - (ACTUATOR TO STRUT RETAINING)		1
	MS24665-304		.COTTER PIN		1
	41A-75116-18		.ACTUATOR ASSY - M/LDG/GR UPLOCK PORT (FOR SPARES ORDER 41A-75116-32)		1
	41A-75116-32		.ACTUATOR ASSY - M/LDG/GR UPLOCK PORT (SPARE FOR 41A-751116-18)		
	41A-75116-19		.ACTUATOR ASSY - M/LDG/GR UPLOCK STBD (FOR SPARES ORDER 41A-75116-33)		1
	41A-75116-33		.ACTUATOR ASSY - M/LDG/GR UPLOCK STBD (SPARE FOR 41A-75116-19)		
- 8	C100994-1		..ACTUATOR ASSY - (V36123) (M/LDG/GR UPLOCK) (IAW 41A-75014-800) (MOD) (FOR BKDN SEE C-13-730-000/MS-000)		1
- 9	ER776-4		..ELBOW - (V96313)		1
	S1313-4		..BOLT - (V88308)		1
	620-042-4		..BANJ-O-SEAL - (V45681) (PLAIN)		1
	620-042-4		..BANJ-O-SEAL - (V45681) (KNURLED)		1
-10	MS21908-4		..ELBOW		1
	AN6289D4		..NUT		1
	M83461/2-904		..PACKING - (V88308)		1
	MS9058-04		..RING		1
-11	41A-42309-2		.BLOCK - UPLOCK ACTUATOR (M/LDG/GR)		2
-12	NAS623-3-21		.SCREW		2
	AN960PD10L		.WASHER		2
	MS21042L3		.NUT		2
	41A-75119	*	.ACTUATOR ASSY - M/LDG/GR DOOR PORT (FOR SPARES ORDER 41A-75119-800)		1
	41A-75119-800		.ACTUATOR ASSY - M/LDG/GR DOOR PORT (SPARE FOR 41A-75119)		
	41A-75119-1	*	.ACTUATOR ASSY - M/LDG/GR DOOR STBD (FOR SPARES ORDER 41A-75119-801)		1
	41A-75119-801		.ACTUATOR ASSY - M/LDG/GR DOOR STBD (SPARE FOR 41A-75119-1)		
		*	IAW C-12-114-000/CF-282		
		**	IAW C-12-114-000/CF-396		

FIGURE AND INDEX NUMBER	GROUP HYDRAULIC SYSTEM MAJOR ASSEMBLY MAIN LANDING GEAR & DOOR HYDRAULIC SYSTEM PART NUMBER	1 2 3 4 5 6 7 NOMENCLATURE	EFFEC-TIVITY	UNITS PER ASSY
2-8-12 -13	3289000-4	..ACTUATOR ASSY - (V35962) (M/LDG/GR DOOR PORT (IAW 41A-75020-800) (MOD) (FOR BKDN SEE C-13-502-000/MS-000)		1
	3289000-5	..ACTUATOR ASSY - (V35962) (M/LDG/GR DOOR STBD (IAW 41A-75020-801) (MOD) (FOR BKDN SEE C-13-502-000/MS-000)		1
-14	MS21907-4	..ELBOW		1
-15	MS21908-4	..ELBOW		1
	AN6289D4	..NUT		2
	M83461/2-904	..PACKING - (V88308)		2
	MS9058-04	..RING		2
-16	MS21902-4	..UNION		1
	M83461/2-904	..PACKING - (V88308)		1
-17	AN970-5	.WASHER		1
-18	AN320-5	.NUT - (ACTUATOR RETAINING)		1
	MS24665-155	.COTTER PIN		1
-19	NAS1107-17D	.BOLT		1
	AN960-716	.WASHER	001-031	1
	AN960-716	.WASHER	032-	2
	AN320-7	.NUT	001-031	1
	AN320-7	.NUT	032-	2
	MS24665-304	.COTTER PIN		1
	41A-75116-16	.ACTUATOR ASSY - M/LDG/GR DOOR UPLOCK PORT (FOR SPARES ORDER 41A-75116-30)		1
	41A-75116-30	.ACTUATOR ASSY - M/LDG/GR DOOR UPLOCK PORT (SPARE FOR 41A-75116-16)		
	41A-75116-17	.ACTUATOR ASSY - M/LDG/GR DOOR UPLOCK STBD (FOR SPARES ORDER 41A-75116-31)		1
	41A-75116-31	.ACTUATOR ASSY - M/LDG/GR DOOR UPLOCK STBD (SPARE FOR 41A-75116-17)		
-20	100994-1	..ACTUATOR ASSY - (V36123) (M/LDG/GR DOOR UPLOCK) (IAW 41A-75014-800) (FOR BKDN SEE C-13-730-000/MS-000)		1
		OR		
	6900-1	..ACTUATOR ASSY - (V36164)		
-21	MS21908-4	..ELBOW		2
	AN6289D4	..NUT		2
	M83461/2-904	..PACKING - (V88308)		2
	MS9058-04	..RING		2
-22	41A-42309-2	.BLOCK - UPLOCK ACTUATOR (DOOR)		2
-23	NAS623-3-21	.SCREW		2
	AN960PD10L	.WASHER		2
	MS21042L3	.NUT		2
	41A-42301-82	.LINE INSTL - PORT WING HYDRAULIC		NP
	41A-42301-83	.LINE INSTL - STBD WING HYDRAULIC		NP
-24	MS21908D4	..ELBOW - (WING ROOT RIB)		3
-25	MS21907D4	..ELBOW - (WING ROOT RIB)		1
	AN960PD716	..WASHER		7
	AN924-4D	..NUT		7
-26	41A-42325-14	..LINE ASSY - MAIN LANDING GEAR UP (PORT)		1
	41A-42325-16	..LINE ASSY - MAIN LANDING GEAR UP (STBD)		1
-27	462W4096	..RESTRICTOR - (V92003)		1
-28	AE6665018E0180	..HOSE ASSY - (V69705) (LDG/GR TO ACTUATOR)		1
-29	41A-42325-2	..LINE ASSY - MAIN LANDING GEAR DOWN (PORT)		1
	41A-42325-4	..LINE ASSY - MAIN LANDING GEAR DOWN (STBD)		1
-30	MS21909-4	..TEE - (LDG/GR DOWN)		1
	AN960PD716	..WASHER		1
	AN924-4D	..NUT		1
-31	AE1002256E0084	..HOSE ASSY - (V69705) (LDG/GR DOWN TO UPLOCK)		1
-32	41A-42325-6	..LINE ASSY - MAIN LANDING GEAR DOWN (PORT)		1
	41A-42325-8	..LINE ASSY - MAIN LANDING GEAR DOWN (STBD)		1
-33	MS21908D4	..ELBOW - (M/LDG/GR DOWN)		2
	AN960PD716	..WASHER		1
	AN924-4D	..NUT		1

FIGURE AND INDEX NUMBER	GROUP HYDRAULIC SYSTEM MAJOR ASSEMBLY MAIN LANDING GEAR & DOOR HYDRAULIC SYSTEM PART NUMBER		1 2 3 4 5 6 7 NOMENCLATURE	EFFEC-TIVITY	UNITS PER ASSY
2-8-12 -34	AE1002256E0135		..HOSE ASSY - (V69705) (M/LDG/GR EMERGENCY DOWN TO ACTUATOR)		1
-35	41A-42325-22		..LINE ASSY - MAIN LANDING GEAR EMERGENCY DOWN (PORT)		1
	41A-42325-24		..LINE ASSY - MAIN LANDING GEAR EMERGENCY DOWN (STBD)		1
-36	MS21909-4		..TEE - (M/LDG/GR EMERGENCY DOWN)		1
	AN960PD716		..WASHER		1
	AN924-4D		..NUT		1
-37	AE1002256E0086		..HOSE ASSY - (V69705) (MAIN LANDING GEAR EMERGENCY DOWN TO UPLOCK)		1
-38	41A-42327-8		..LINE ASSY - MAIN LANDING GEAR EMERGENCY DOWN (PORT)		1
	41A-42327-26		..LINE ASSY - MAIN LANDING GEAR EMERGENCY DOWN (STBD)		1
-39	MS21908-4		..ELBOW - (M/LDG/GR EMERGENCY DOWN)		1
	AN960PD716		..WASHER		1
	AN924-4D		..NUT		1
-40	AE1002256E0135		..HOSE ASSY - (V69705) (M/LDG/GR EMERGENCY DOWN TO ACTUATOR)		1
-41	41A-42301-92		..TAPE - PRESSURE SENSITIVE		AR
-42	MS21919WDG8	*	..CLAMP - (WS 74)		2
	AN742D4	*	..CLAMP - (WS 74)		1
-43	NAS623-3-10		..SCREW		1
-44	NAS43DD3-16		..SPACER		1
	AN936B10		..LOCK WASHER		1
-45	41A-42325-30		..LINE ASSY - M/LDG/GR DOOR UP (PORT)		1
	41A-42325-32		..LINE ASSY - M/LDG/GR DOOR UP (STBD)		1
-46	MS21908D4		..ELBOW - (M/LDG/GR DOOR UP)		1
	AN960PD716		..WASHER		1
	AN924-4D		..NUT		1
-47	AE1002256E0076		..HOSE ASSY - (V69705) (M/LDG/GR DOOR UP TO ACTUATOR)		1
-48	41-75440-2		..CLAMP - LINE SUPPORT		2
-49	NAS623-3-9		..SCREW		4
-50	41A-42325-34		..LINE ASSY - M/LDG/GR DOOR DOWN (PORT)		1
	41A-42325-36		..LINE ASSY - M/LDG/GR DOOR DOWN (STBD)		1
-51	MS21912-4		..TEE - (M/LDG/GR DOOR DOWN)		1
	AN960PD716		..WASHER		1
	AN924-4D		..NUT		1
-52	AE1002415E0104		..HOSE ASSY - (V69705) (M/LDG/GR DOOR DOWN TO ACTUATOR)		1
-53	41A-42325-38		..LINE ASSY - M/LDG/GR DOOR DOWN (PORT)		1
	41A-42325-40		..LINE ASSY - M/LDG/GR DOOR DOWN (STBD)		1
-54	MS21924-4		..UNION - (M/LDG/GR DOWN)		2
	AN960PD716		..WASHER		2
	AN924-4D		..NUT		2
-55	AE1002256E0164		..HOSE ASSY - (V69705) (M/LDG/GR DOOR DOWN TO ACTUATOR)		1
-56	41A-42325-42		..LINE ASSY - M/LDG/GR DOOR EMERGENCY DOWN (PORT)		1
	41A-42325-44		..LINE ASSY - M/LDG/GR DOOR EMERGENCY DOWN (STBD)		1
-57	MS21912-4		..TEE - (M/LDG/GR EMERGENCY DOWN)		1
	AN960PD716		..WASHER		1
	AN924-4D		..NUT		1
-58	AE1002256E0114		..HOSE ASSY - (V69705) (MAIN LANDING GEAR DOOR EMERGENCY DOWN TO ACTUATOR)		1
-59	41A-42325-46		..LINE ASSY - M/LDG/GR DOOR EMERGENCY DOWN (PORT)		1
	41A-42325-48		..LINE ASSY - M/LDG/GR DOOR EMERGENCY DOWN (STBD)		1
		*	IAW C-12-114-000/CF-396		

FIGURE AND INDEX NUMBER	GROUP HYDRAULIC SYSTEM MAJOR ASSEMBLY MAIN LANDING GEAR & DOOR HYDRAULIC SYSTEM PART NUMBER	1 2 3 4 5 6 7 NOMENCLATURE	EFFEC-TIVITY	UNITS PER ASSY
2-8-12 -60	MS21924-4	..UNION - (M/LDG/GR EMERGENCY DOWN)		1
	AN960PD716	..WASHER		1
	AN924-4D	..NUT		1
-61	AE1002256E0134	..HOSE ASSY - (V69705) (MAIN LANDING GEAR DOOR EMERGENCY DOWN TO UPLOCK)		1
-62	41A-42325-50	..LINE ASSY - BRAKE (PORT)		1
	41A-42325-52	..LINE ASSY - BRAKE (STBD)		1
-63	MS35489-6	..GROMMET		1
-64	MS21902D4	..UNION - (BRAKE)		1
-65	41A-42325-74	..LINE ASSY - BRAKE (PORT)		1
	41A-42325-76	..LINE ASSY - BRAKE (STBD)		1
-66	MS21902D4	..UNION - (BRAKE)		1
-67	41A-42325-54	..LINE ASSY - BRAKE (PORT)		1
	41A-42325-56	..LINE ASSY - BRAKE (STBD)		1
-68	MS21924-4	..UNION - (BRAKE)		1
	AN960PD716	..WASHER		1
	AN924-4D	..NUT		1
-69	AE6665018E0102	..HOSE ASSY - (V69705) (BRAKE TO SWIVEL JOINT)		1
-70	AN742D4	..CLAMP		5
-71	NAS623-3-2	..SCREW		5
	AN960PD10L	..WASHER		5
	MS21042L3	..NUT		5
	41A-10008	PANEL ASSY - SKIN LOWER PORT(SEE SECTION 1)		REF
	41A-10008-1	PANEL ASSY - SKIN LOWER STBD		REF
-72	41-75474-2	.ANGLE - BRAKE LINE SUPPORT (26076 & SUBS RIVETTED)		1
-73	NAS623-3-3	.SCREW	001-075	1
	AN960PD10L	.WASHER	001-075	1
	MS21042L3	.NUT	001-075	1
-74	41A-87503	STRUT ASSY - MAIN GEAR SHOCK (SEE SECTION 4)		REF
-75	41A-85018	BOLT - MAIN GEAR (ACTUATOR RETAINING) (SEE SECTION 4)		REF
-76	41A-87523	SPIGOT - MAIN GEAR DOOR (ACTUATOR PIVOT) (SEE SECTION 1)		REF
-77	41A-87552-10	LEVER ASSY - MAIN GEAR DOOR (SEE SECTION 4)		REF
-78	41A-87508-804	UPLOCK ASSY - MAIN GEAR (SEE SECTION 4)		REF
-79	41A-87520-804	UPLOCK ASSY - MAIN GEAR DOOR (SEE SECTION 4)		REF
-80	3297000-1	SWIVEL ASSY - (MAIN GEAR BRAKE LINE JOINT) (SEE SECTION 4)		REF

-000-

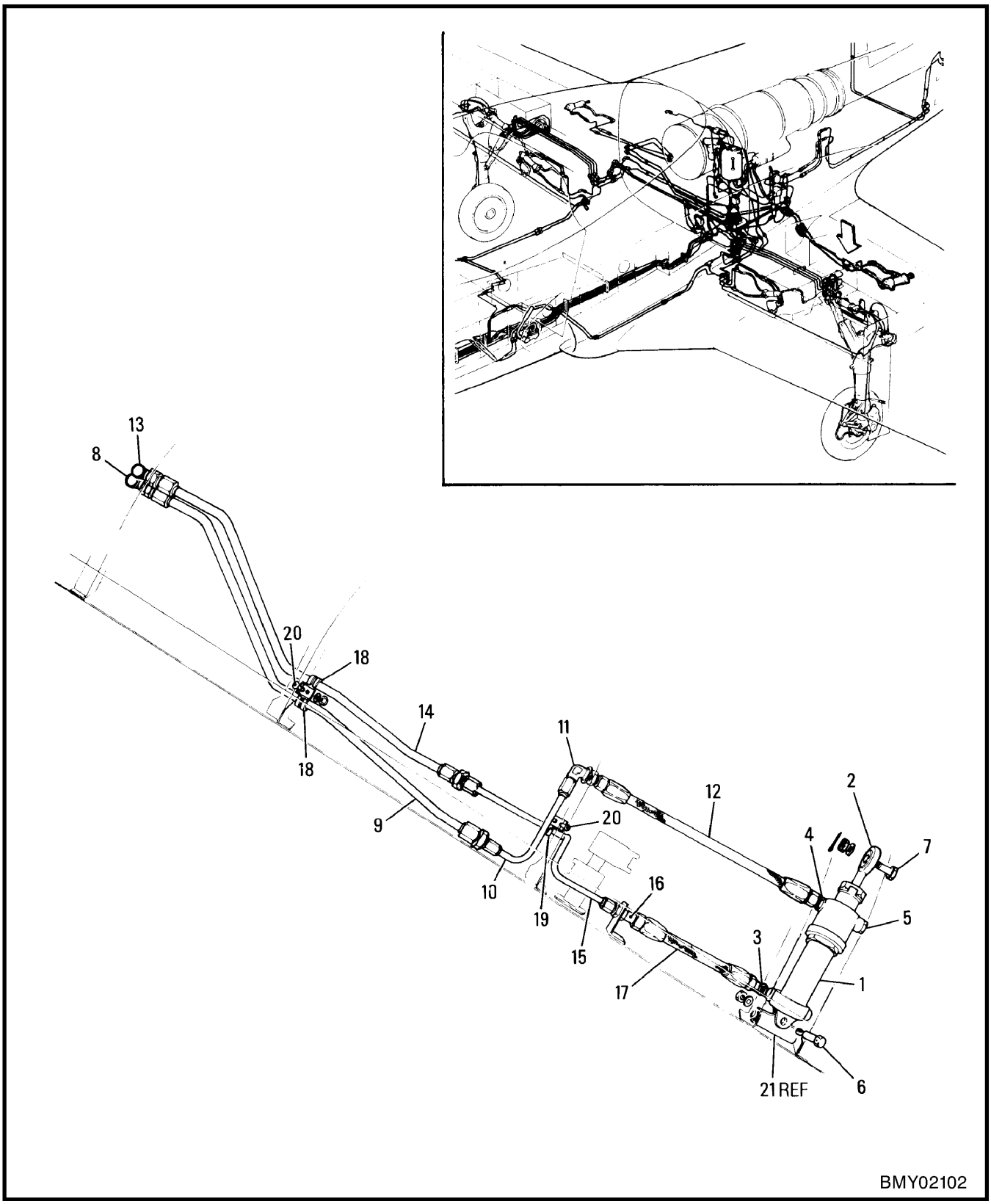

Figure 2-8-13 Flap Actuator Hydraulic System

FIGURE AND INDEX NUMBER	GROUP HYDRAULIC SYSTEM MAJOR ASSEMBLY FLAP ACTUATOR HYDRAULIC SYSTEM PART NUMBER	1 2 3 4 5 6 7 NOMENCLATURE	EFFEC-TIVITY	UNITS PER ASSY
2-8-13 -	41A-42307	HYDRAULIC SYS INSTL - FLAP ACTUATOR PORT (SEE SECTION 1)		NP
	41A-42307-1	HYDRAULIC SYS INSTL - FLAP ACTUATOR STBD		NP
	41A-75120	.ACTUATOR ASSY - FLAP PORT		1
	41A-75120-1	.ACTUATOR ASSY - FLAP STBD		1
- 1	6350-1	..ACTUATOR ASSY - (V02121) (FLAP) (IAW 41A-75015) (FOR BKDN SEE C-13-885-000/MS-000)		1
- 2	ADNE6JW	...BEARING - (SEE C-13-885-000/MS-000)		1
- 3	MS21908-4	..ELBOW		1
	AN6289D4	..NUT		1
	MS28778-4	..PACKING		1
	MS9058-04	..RING		1
- 4	MS21902-4	..UNION		1
- 5	AN814-4D	..PLUG		2
	MS28778-4	..PACKING		3
- 6	41A-42328	.BOLT - FLAP ACTUATOR SPECIAL		1
	AN960C416L	.WASHER		1
	AN320-4	.NUT		1
- 7	NAS6206-28D	.BOLT - (ACTUATOR RETAINING)		1
	AN960C616	.WASHER		1
	AN320-6	.NUT		1
	MS24665-283	.COTTER PIN		1
- 8	MS21908D6	.ELBOW - (WS 32 FLAP UP LINE)		1
	AN960PD916	.WASHER		1
	AN924-6D	.NUT		1
- 9	41A-42325-62	.LINE ASSY - FLAP UP (PORT)		1
	41A-42325-70	.LINE ASSY - FLAP UP (STBD)		1
	MS21916D6-4	.REDUCER - (FLAP UP)		1
-10	41A-42325-60	.LINE ASSY - FLAP UP (PORT)		1
	41A-42325-68	.LINE ASSY - FLAP UP (STBD)		1
-11	MS21908-4	.ELBOW - (FLAP UP)		1
	AN960PD716	.WASHER		1
	AN924-4D	.NUT		1
-12	AE1002256E0120	.HOSE ASSY - (V69705) (FLAP UP)		1
-13	MS21908D6	.ELBOW - (WS 32 FLAP DOWN LINE)		1
	AN960PD916	.WASHER		1
	AN924-6D	.NUT		1
-14	41A-42325-64	.LINE ASSY - FLAP DOWN (PORT)		1
	41A-42325-72	.LINE ASSY - FLAP DOWN (STBD)		1
	MS21916D6-4	.REDUCER		1
-15	41A-42325-58	.LINE ASSY - FLAP DOWN (PORT)		1
	41A-42325-66	.LINE ASSY - FLAP DOWN (STBD)		1
-16	MS21924-4	.UNION - (FLAP DOWN)		1
	AN960PD716	.WASHER		1
	AN924-4D	.NUT		1
-17	AE1002256E0073	.HOSE ASSY - (V69705) (FLAP DOWN)		1
-18	316-6-8	.CLIP - (V00502)		2
-19	316-4-8	.CLIP - (V00502)		1
-20	MS35207-265	.SCREW		2
	AN960C10L	.WASHER		2
	MS21042L3	.NUT		2
-21	41A-10071	TRUNNION - FLAP ACTUATOR (SEE SECTION 1)		REF
		-000-		

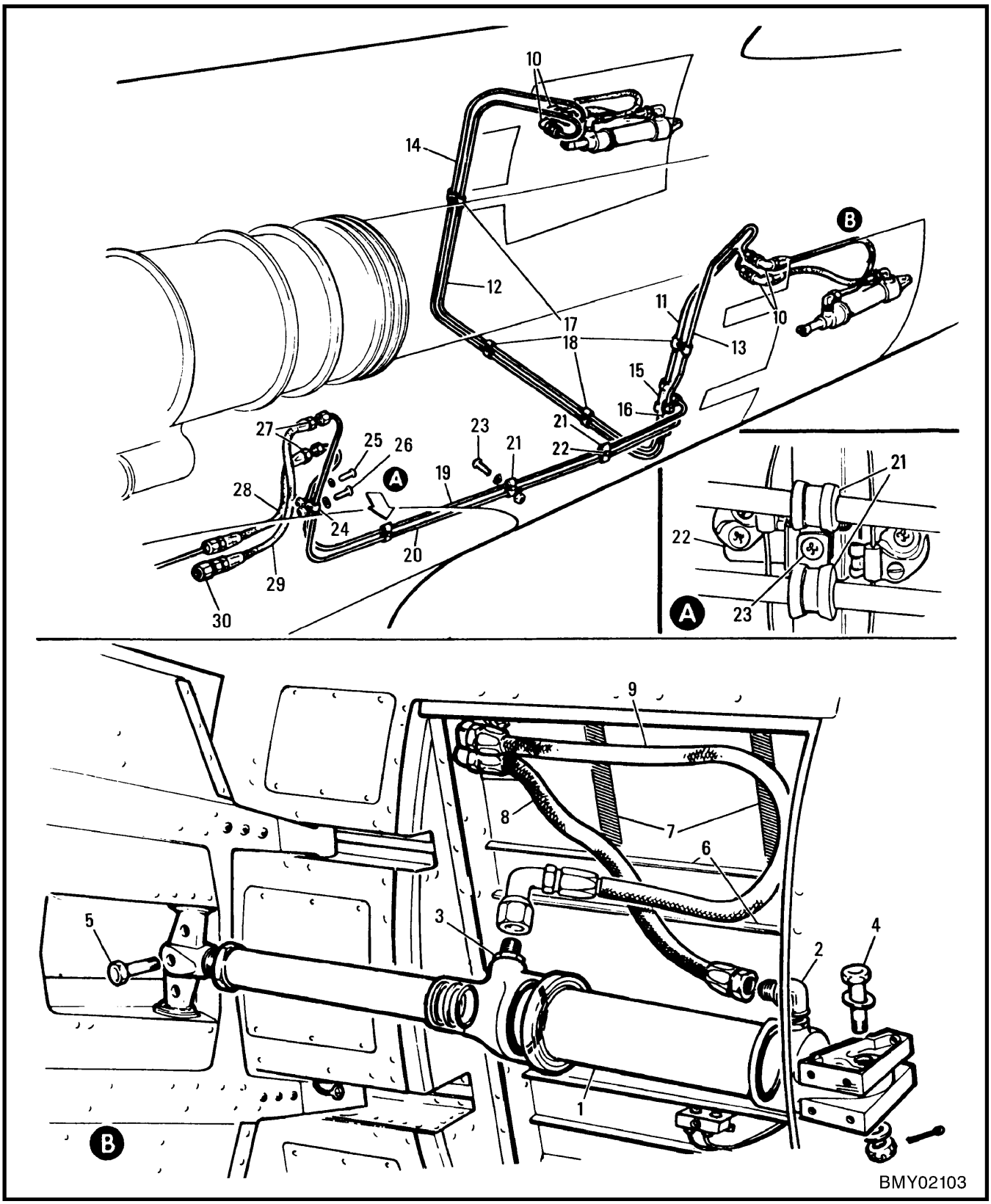

Figure 2-8-14 Speedbrake Actuator & Hydraulic Lines

FIGURE AND INDEX NUMBER	GROUP HYDRAULIC SYSTEM MAJOR ASSEMBLY SPEEDBRAKE ACTUATOR & HYDRAULIC LINES PART NUMBER		1 2 3 4 5 6 7 NOMENCLATURE	EFFEC-TIVITY	UNITS PER ASSY
2-8-14 -	41A-42306		HYDRAULIC SYS INSTL - REAR FUSELAGE (SEE SECTION 3)		NP
	41A-75113-800		.ACTUATOR ASSY - SPEEDBRAKE PORT		1
	41A-75113-801		.ACTUATOR ASSY - SPEEDBRAKE STBD		1
- 1	24-100D2		..ACTUATOR ASSY - (V36164) (SPEEDBRAKE INTERNAL LOCK TYPE PORT) (IAW 41A-75019-800) (FOR BKDN SEE C-13-721-000/MS-000)		1
	24-100D3		..ACTUATOR ASSY - (V36164) (SPEEDBRAKE INTERNAL LOCK TYPE STBD) (IAW 41A-75019-801) (FOR BKDN SEE C-13-721-000/MS-000)		1
- 2	MS21926-6D		..ELBOW		1
	AN6289D6		..NUT		1
	MS28778-6		..PACKING		2
	MS9058-06		..RING		1
- 3	462W4097		..RESTRICTOR - (V92003)		1
	MS28778-6		..PACKING		1
- 4	NAS6208-18D		.BOLT		2
	AN960PD816		.WASHER		4
	AN320-8		.NUT		2
	MS24665-285		.COTTER PIN		2
- 5	NAS6208-11D		.BOLT		2
	AN960-PD816		.WASHER		2
	AN320-8		.NUT		2
	MS24665-285		.COTTER PIN		2
- 6	S4905-020		.EXTRUSION - (V88308)		4
- 7	41A-42306-58		.TAPE - TEMPERATURE RESISTING		4
- 8	41A-42306-46		.HOSE ASSY - SPEEDBRAKE OPEN		2
	AE1002256G0172		..HOSE ASSY - (V69705)		1
	41A-42306-50		..COVER - PROTECTIVE		1
- 9	AE1002406G0224		.HOSE ASSY - (V69705)		2
-10	MS21908-6		.ELBOW - (SPEEDBRAKE OPEN)		4
	AN960PD916		.WASHER		4
	AN924-6		.NUT		4
-11	41A-42327-44	*	.LINE ASSY - SPEEDBRAKE OPEN		1
-12	41A-42327-46	*	.LINE ASSY - SPEEDBRAKE OPEN		1
-13	41A-42327-50	*	.LINE ASSY - SPEEDBRAKE CLOSE		1
-14	41A-42327-52	*	.LINE ASSY - SPEEDBRAKE CLOSE		1
	AN960PD916		.WASHER		4
-15	MS21905-6		.TEE - (SPEEDBRAKE OPEN)		1
-16	MS21905-6		.TEE - (SPEEDBRAKE CLOSE)		1
-17	755-6-2-8HT		.CLIP - (V00502)		8
-18	NAS623-3-3		.SCREW		4
	AN960PD10L		.WASHER		4
	MS21042L3		.NUT		4
-19	41A-42327-42	*	.LINE ASSY - SPEEDBRAKE OPEN		1
-20	41A-42327-48	*	.LINE ASSY - SPEEDBRAKE CLOSE		1
-21	755-6-2-8HT		.CLIP - (V00502)		6
-22	NO NUMBER		.BRACKET - OVERHEAT DETECTION WIRES STDF (IAW C-12-114-000/CF-353)		1
-23	NAS623-3-3		.SCREW		3
	AN960PD10L		.WASHER		3
	MS21042L3		.NUT		3
-24	782-1-6HT		.CLIP - (V00502)		2
-25	NAS623-3-3		.SCREW		1
-26	NAS623-3-2		.SCREW		1
	AN960PD10L		.WASHER		2
	MS21042L3		.NUT		2
-27	MS21924-6		.UNION - (FS 314 SPEEDBRAKE)		2
	AN960-916L		.WASHER		2
	AN924-6		.NUT		2
-28	AE1002256G0130		.HOSE ASSY - (V69705) (SPEEDBRAKE OPEN)		1
-29	AE1002256G0150		.HOSE ASSY - (V69705) (SPEEDBRAKE CLOSE)		1
-30	MS21915-8-6		.BUSHING		1
			-000-		
		*	IAW C-12-114-000/CF-389		

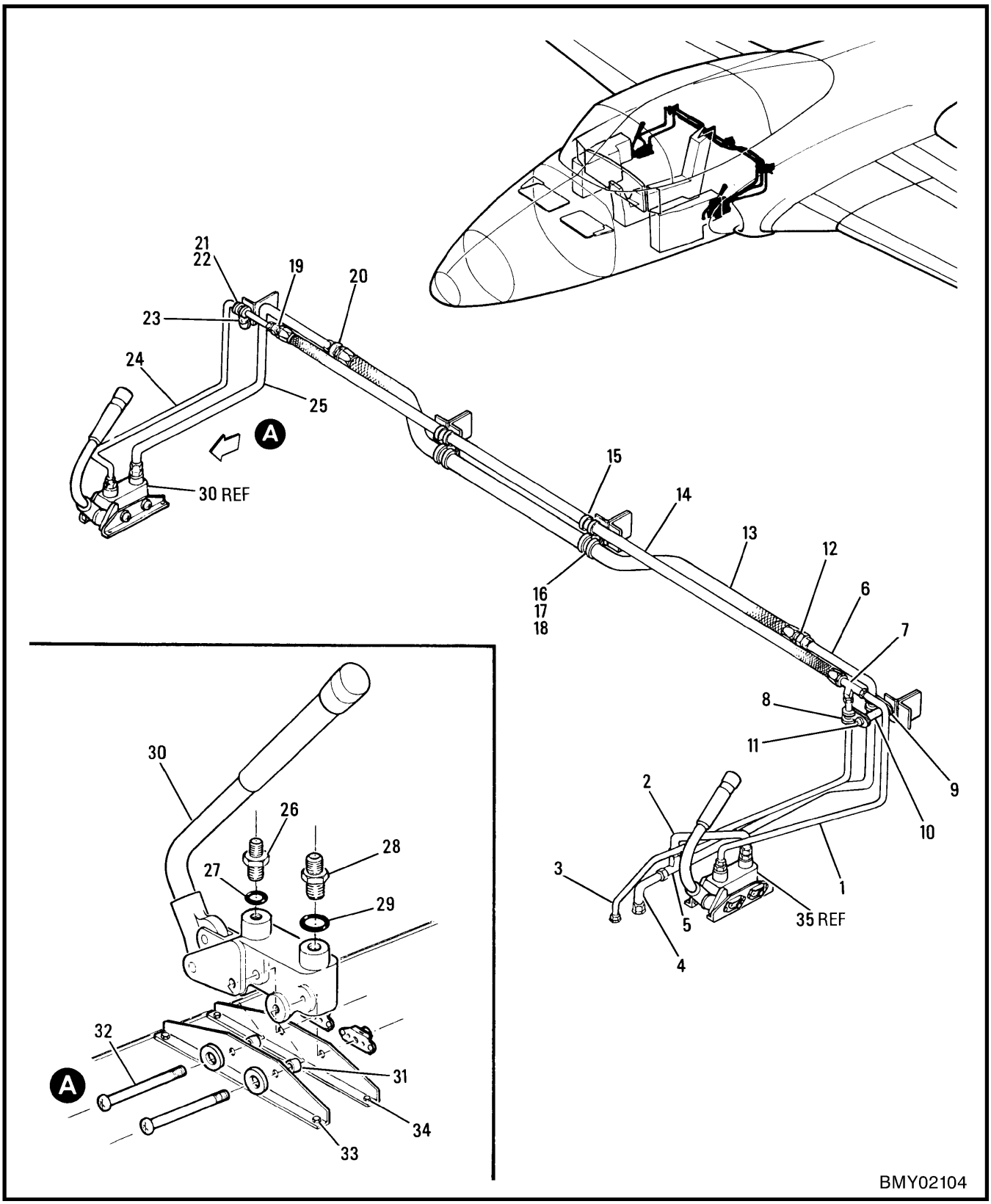

Figure 2-8-15 Cross Cockpit Hand Pump & Hydr Piping (For Snowbird Arcft Only)

FIGURE AND INDEX NUMBER	GROUP HYDRAULIC SYSTEM MAJOR ASSEMBLY CROSS COCKPIT HAND PUMP & HYDR PIPING PART NUMBER	1 2 3 4 5 6 7 NOMENCLATURE	EFFEC-TIVITY	UNITS PER ASSY
2-8-15 -	NW4513200-1	CROSS COCKPIT GENL ASSY (SEE SECTIONS 1, 7, 11, 12 & 14)	A	REF
	NW4513070-1	.PIPING INSTL - CROSS COCKPIT HYD		NP
- 1	NW4513069-1	..TUBE ASSY		1
- 2	NW4513069-4	..TUBE ASSY		1
- 3	NW4513069-2	..TUBE ASSY		1
- 4	NW4513069-5	..TUBE ASSY		1
- 5	AN824-6	..TEE		1
- 6	NW4513069-6	..TUBE ASSY		1
- 7	AN824-4	..TEE		1
- 8	MS21919WDG4	..CLAMP		1
- 9	MS21919WDG6	..CLAMP		1
-10	NAS43P38-050	..SPACER		1
-11	MS35207-267	..SCREW		1
	AN960-10L	..WASHER		1
	MS21042-3	..NUT		1
-12	AN815-6	..UNION		1
-13	MS28741-6-0400	..HOSE ASSY		1
-14	MS28741-4-0470	..HOSE ASSY		1
-15	MS21919WDG10	..CLAMP		2
-16	MS21919WDG12	..CLAMP		2
-17	NAS43P38-050	..SPACER		2
-18	MS35207-267	..SCREW		2
	AN960-10L	..WASHER		2
	MS21042-3	..NUT		2
-19	AN815-4	..UNION		1
-20	AN815-6	..UNION		1
-21	MS21919WDG4	..CLAMP		1
-22	NAS43P38-05	..SPACER		1
-23	MS35207-267	..SCREW		1
	AN960-10L	..WASHER		1
	MS21042-3	..NUT		1
-24	NW4513069-3	..TUBE ASSY		1
-25	NW4513069-7	..TUBE ASSY		1
	NW4513055-1	.PUMP INSTL - HYD (RH)		NP
-26	MS21916D8-6	..REDUCER		1
-27	S1422-8	..PACKING		1
-28	MS21916D6-4	..REDUCER		1
-29	S1422-6	..PACKING		1
-30	AN6201-1	..PUMP - (V81350) (RH)		1
-31	NAS43DD4-16	..SPACER		1
-32	NAS6204-44	..BOLT		2
	AN960-416	..WASHER		AR
	AN960-416L	..WASHER		AR
-33	NAS1669-08-4	..FASTENER		2
-34	NAS1669-08-5	..FASTENER		2
-35	AN6201-1	PUMP - LH (SEE FIG. 2-8-4)		REF
		-000-		
	A	FOR SNOWBIRD AIRCRAFT ONLY		

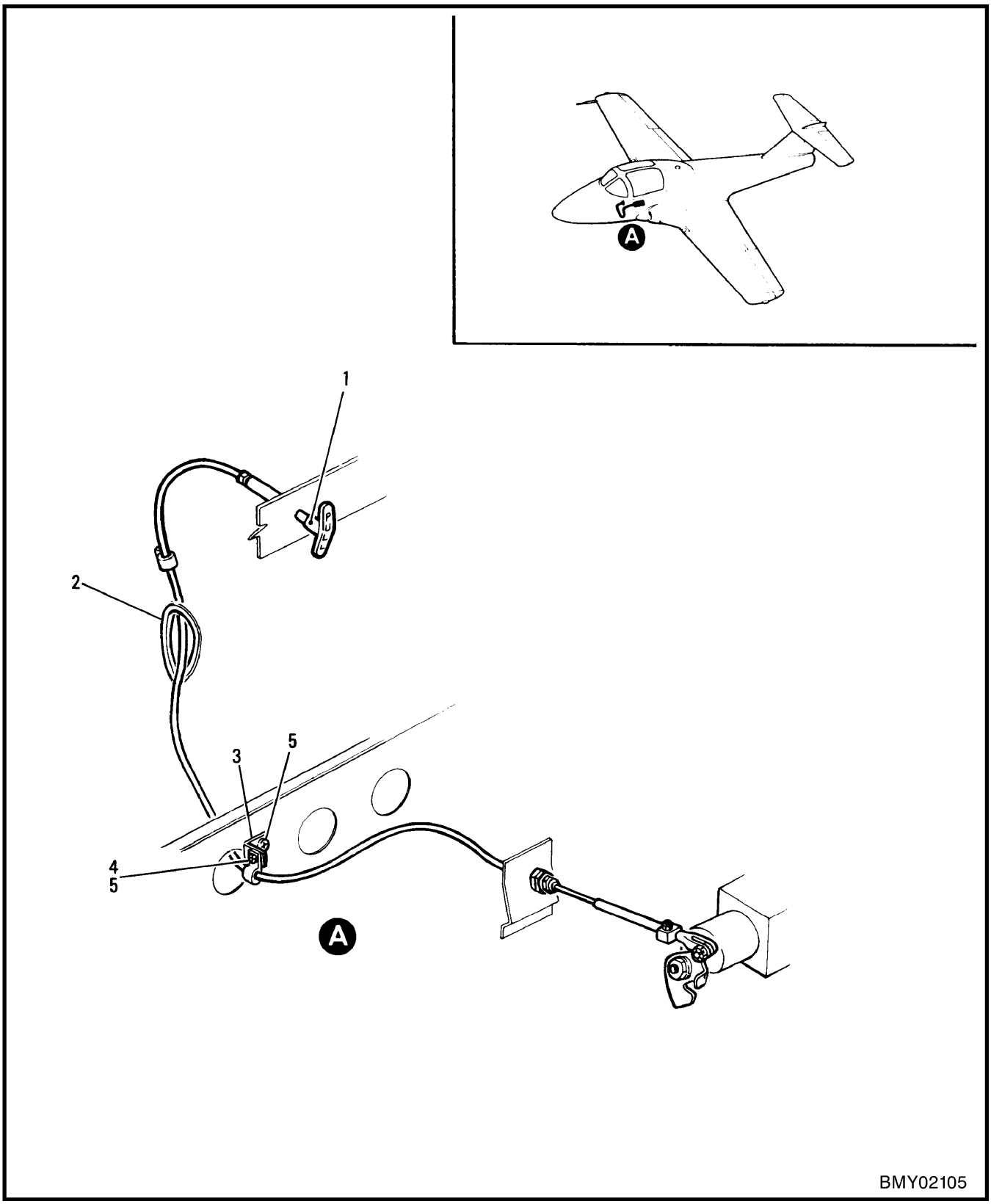

Figure 2-8-16 Cross Cockpit Ldg Gear Emer Valve Control Mod (For Snowbird Aircraft Only)

FIGURE AND INDEX NUMBER	GROUP HYDRAULIC SYSTEM MAJOR ASSEMBLY CROSS COCKPIT LDG GEAR EMER VALVE CONTROL MOD PART NUMBER	1 2 3 4 5 6 7 NOMENCLATURE	EFFEC-TIVITY	UNITS PER ASSY
2-8-16 -	NW4513200-1	CROSS COCKPIT GENL ASSY (SEE FIG. 2-8-15, SECTIONS 1, 7, 11, 12 & 14)	A	REF
	NW4513081-1	.CONTROL INSTL - LANDING GEAR EMERGENCY VALVE		NP
	NW4513084-1	..CONTROL MOD - LANDING GEAR EMERGENCY VALVE		REF
- 1	MS171526	...PIN		1
- 2	MS21266-1N	..GROMMET		AR
- 3	AN743-12	..BRACKET		1
- 4	A5506	..CLIP - (V78710)		2
- 5	MS35207-263	..SCREW		3
	AN960KD-10L	..WASHER		6
	MS21042-3	..NUT		3
		-000-		
	A	FOR SNOWBIRD ARCFT ONLY		

SECTION 9

HEAT & VENT & PRESSURIZATION SYSTEM

TABLE OF CONTENTS

Figure	Title	Page
2-9-1	Heat & Vent & Pressurization System	2-9-2
2-9-2	Complete Heat & Vent & Pressurization System	2-9-4
2-9-3	Pressure Regulator, Dump Valve & Static Lines	2-9-6
2-9-4	Windshield Rain Removal System	2-9-8
2-9-5	Cockpit Heat Distribution & Ram Air	2-9-12
2-9-6	Cockpit Canopy Seal System	2-9-16
2-9-7	Water Separator & Distribution System	2-9-20
2-9-8	Engine to Firewall Bleed Air System	2-9-24

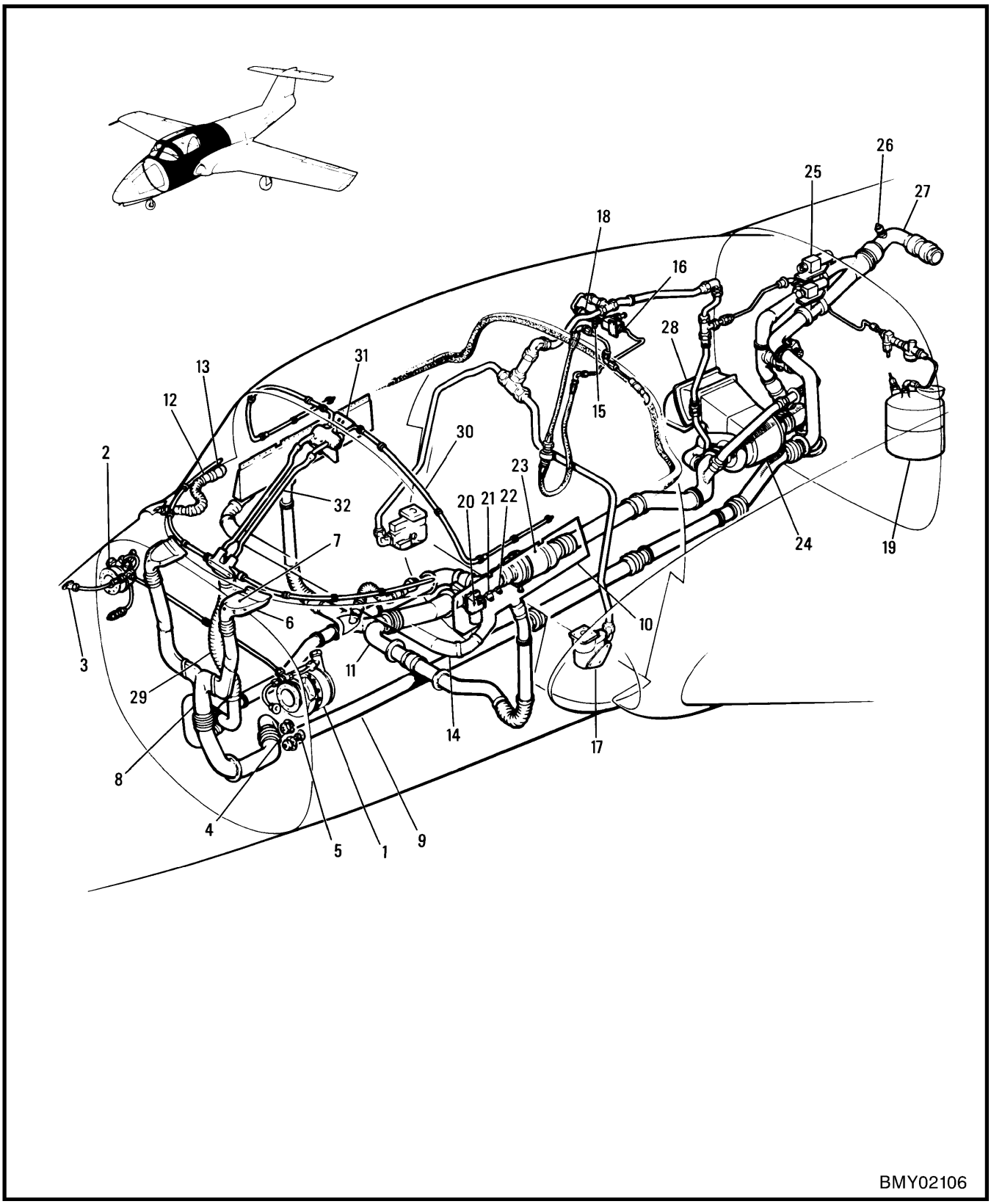

Figure 2-9-1 Heat & Vent & Pressurization System

FIGURE AND INDEX NUMBER	GROUP: HEAT & VENT & PRESSURIZATION MAJOR ASSEMBLY: HEAT & VENT & PRESSURIZATION SYSTEM PART NUMBER		1 2 3 4 5 6 7 NOMENCLATURE	EFFEC-TIVITY	UNITS PER ASSY
2-9-1 - 1	102196-2		REGULATOR ASSY - CABIN PRESSURE (SEE FIG. 2-9-3)		REF
- 2	103308-1		VALVE ASSY - SAFETY & DUMP (SEE FIG. 2-9-3)		REF
- 3	41A-97205		ADAPTER ASSY - SKIN CONNECTION SPECIAL (SEE FIG. 2-9-3)		REF
- 4	41A-97203-2		FITTING - GROUND TEST AIR SOURCE (SEE FIG. 2-9-3)		REF
- 5	41A-97206		FITTING - GROUND TEST (SEE FIG. 2-9-3)		REF
- 6	41A-80201		NOZZLE - RAIN REMOVAL (SEE FIG. 2-9-4)		REF
- 7	41A-80202-2		FAIRING ASSY - RAIN REMOVAL (SEE FIG. 2-9-4)		REF
- 8	41A-80203-800		DUCT ASSY - RAIN REMOVAL (SEE FIG. 2-9-4)		REF
- 9	41A-80204-806		DUCT ASSY - RAIN REMOVAL (SEE FIG. 2-9-4)		REF
-10	41A-95212-800		OUTLET ASSY - SHOULDER (SEE FIG. 2-9-5)		REF
-11	41A-95214		DUCT ASSY - (SEE FIG. 2-9-5)		REF
-12	F5040-16		VALVE ASSY - (CHECK) (SEE FIG. 2-9-5)		REF
-13	2110-2		VENTILATOR ASSY - (RAM AIR CABIN) (SEE FIG. 2-9-5)		REF
-14	41A-35091-2		TUBE ASSY - WELDED CROSS (SEE SECTION 3)		REF
-15	41A-97700		CAP ASSY - PRESSURE TEST CONNECTION (SEE FIG. 2-9-6)		REF
-16	1182B-CL41		REGULATOR ASSY - (SEE FIG. 2-9-6)		REF
R -17	MS24350-1	*	VALVE ASSY - (ANTI-G)		REF
-18	279A4TB		VALVE ASSY - (CHECK) (SEE FIG. 2-9-6)		REF
-19	41A-75023		RESERVOIR ASSY - MAIN HYD (SEE SECTION 8)		REF
-20	321094-3-1		VALVE ASSY - (BUTTERFLY SHUT OFF) (SEE FIG. 2-9-7)		REF
-21	26220068		SENSOR - (OVERHEAT) (SEE FIG. 2-9-7)		REF
-22	30050-15		SENSOR - (OUTLINE TEMP) (SEE FIG. 2-9-7)		REF
-23	85020-2		SEPARATOR ASSY - (WATER) (SEE FIG. 2-9-7)		REF
-24	682565-1		REFRIGERATION ASSY - (SEE FIG. 2-9-7)		REF
-25	321682-1-1		VALVE ASSY - (SHUT OFF) (SEE FIG. 2-9-8)		REF
-26	26220068		SENSOR - (OVERHEAT) (SEE FIG. 2-9-8)		REF
-27	41A-98206		DUCT ASSY - FLEXIBLE ELBOW (SEE FIG. 2-9-8)		REF
-28	41A-96202-48		DUCT ASSY - HEAT EXCHANGER COOLING AIR (SEE SECTION 3)		REF
-29	3-1664-12-86-6		HOSE - (FLEXIBLE) (SEE SECTION 10)		REF
-30	41A-42007		TUBE ASSY - DEMIST (SEE SECTION 10)		REF
-31	41A-42002		INTERCONNECT - WINDSHIELD DEMIST MALE (SEE SECTION 10)		REF
-32	41A-42004		TUBE - WINDSHIELD DEMIST VERTICAL (SEE SECTION 3)		REF
			-000-		
R		*	REMOVED IAW C-12-114-000/CF-376		

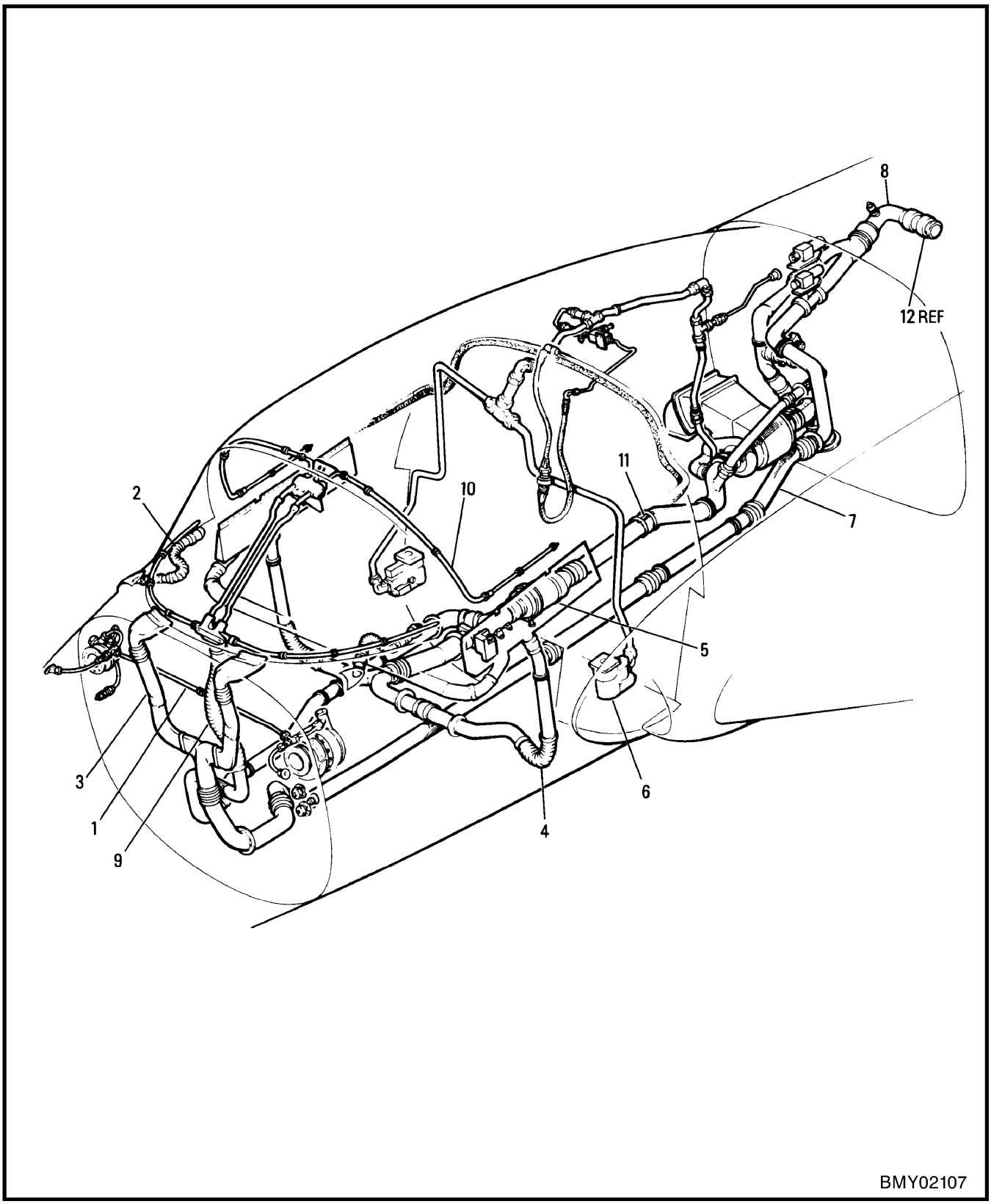

Figure 2-9-2 Complete Heat & Vent & Pressurization System

FIGURE AND INDEX NUMBER	GROUP	HEAT & VENT & PRESSURIZATION	EFFEC-TIVITY	UNITS PER ASSY
	MAJOR ASSEMBLY	COMPLETE HEAT & VENT & PRESSURIZATION SYSTEM		
	PART NUMBER	1 2 3 4 5 6 7 NOMENCLATURE		
2-9-2 -	41A-42000	AIR CONDITIONING SYS INSTL - COMPLETE (SEE SECTION 3)		NP
- 1	41A-95002	.CHECK VALVE & STATIC LINE INSTL - PRESSURE REGULATOR (SEE FIG. 2-9-3)		REF
- 2	41A-42000-1	.RAM AIR SYS INSTL - COCKPIT (SEE FIG. 2-9-5)		REF
- 3	41A-42000-9	.RAIN REMOVAL SYS INSTL - WINDSHIELD (SEE FIG. 2-9-4)		REF
- 4	41A-42000-5	.HEAT DISTRIBUTION SYS INSTL - COCKPIT (SEE FIG. 2-9-5)		REF
- 5	41A-42000-6	.SEPARATOR INSTL - WATER (SEE FIG. 2-9-7)		REF
- 6	41A-42000-10	.ANTI-G & CANOPY SEAL SYSINSTL - COCKPIT (SEE FIG. 2-9-6)		REF
- 7	41A-42000-8	.DISTRIBUTION SYS INSTL - FIREWALL TO MAIN SPAR (SEE FIG. 2-9-7)		REF
- 8	41A-42000-7	.BLEED AIR SYS INSTL - ENG TO FIREWALL (SEE FIG. 2-9-8)		REF
- 9	41A-42000-2	.DEMIST SYS INSTL - WINDSHIELD (SEE SECTION 10)		REF
-10	41A-42000-3	.DEMIST SYS INSTL - CANOPY (SEE SECTION 10)		REF
-11	S1296	.STRIP - (V88308)		AR
-12	18276-250	CLAMP - (SEE SECTION 5)		REF

-000-

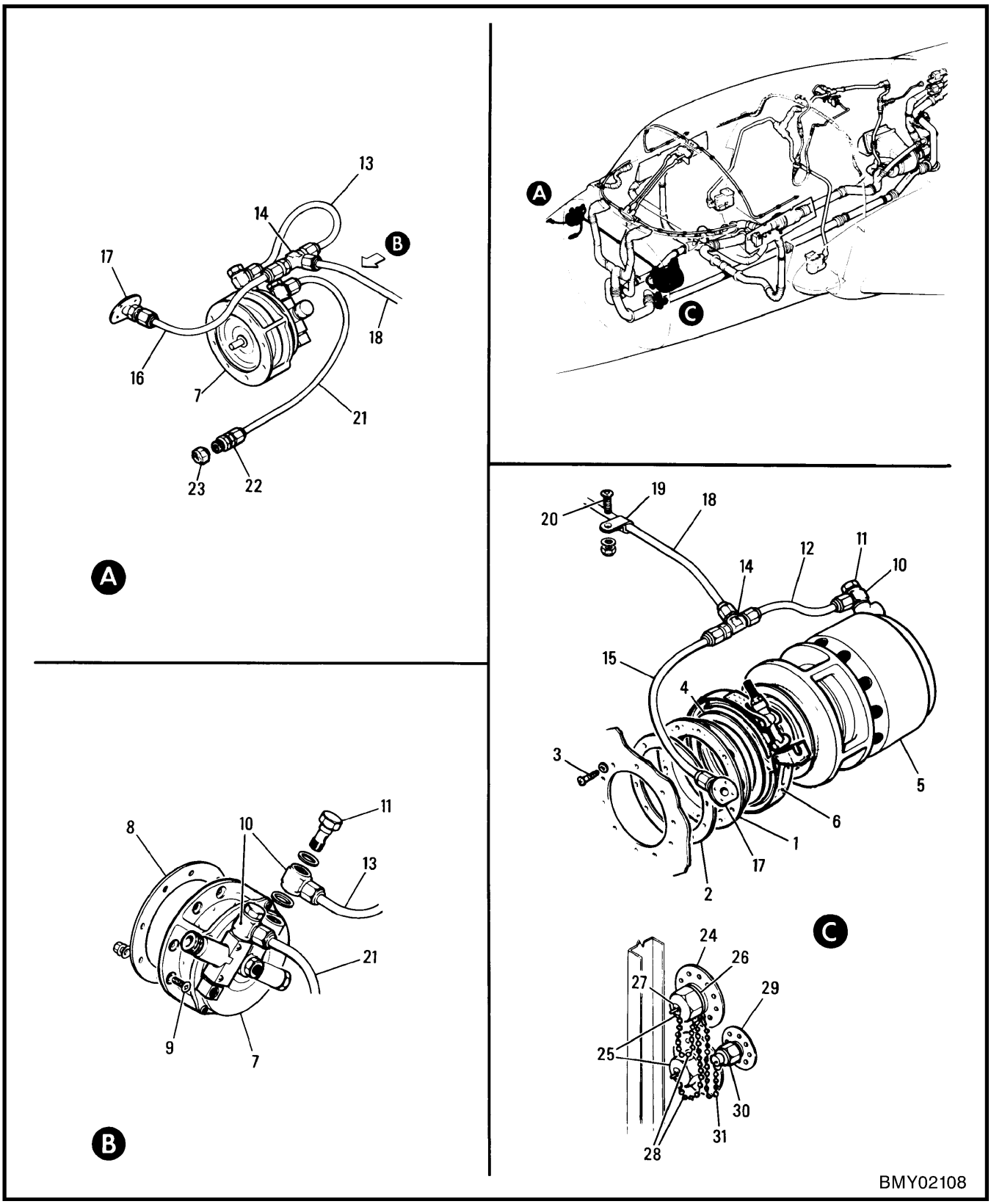

Figure 2-9-3 Pressure Regulator, Dump Valve & Static Lines

FIGURE AND INDEX NUMBER	GROUP: HEAT & VENT & PRESSURIZATION MAJOR ASSEMBLY: PRESSURE REGULATOR, DUMP VALVE & STATIC LINES PART NUMBER	1 2 3 4 5 6 7 NOMENCLATURE	EFFEC-TIVITY	UNITS PER ASSY
2-9-3 -	41A-95002	CHECK VALVE & STATIC LINE INSTL - PRESSURE REGULATOR (SEE FIG. 2-9-2)		NP
- 1	41-96809-800	.FLANGE ASSY - STUD		1
- 2	41A-97207	.SEAL - PRESSURE REGULATOR VALVE		1
- 3	MS35207-265	.SCREW		10
	AN960PD10	.WASHER		10
R - 4	41-96806	.SEAL (V48482)		1
- 5	102196-2	.REGULATOR - (V70210) (CABIN PRESSURE) (IAW 41A-97100) (FOR BRKDN SEE C-13-B19-000/MS-000)		1
	14523-2	..FILTER ASSY - (V70210)		1
	14615	..GASKET - (V70210)		1
	14625	..GASKET - (V70210)		1
	14684	..GASKET - (V70210)		1
	14990	..GASKET - (V70210)		1
	135751	..GASKET - (V70210)		1
- 6	15183-53125SH	.COUPLING - (V75829)		1
- 7	103308-1	.VALVE ASSY - (V70210) (SAFETY & DUMP) (IAW 41A-97101) (FOR BRKDN SEE C-13-B20-000/MS-000)		1
	14523-14	..FILTER ASSY - (V70210)		1
- 8	41A-97200	.SEAL		1
- 9	MS35207-264	.SCREW		8
	AN960PD10L	.WASHER		8
	MS21042L3	.NUT		8
-10	AN776-4D	.ELBOW		3
-11	AN775-4D	.BOLT		3
	AN901-4A	.GASKET		3
-12	41A-97201-6	.LINE ASSY - BULKHEAD TO REGULATOR STATIC		1
-13	41A-97201-10	.LINE ASSY - BULKHEAD TO SAFETY VALVE STATIC		1
-14	AN804D4	.TEE		2
	AN960PD716	.WASHER		2
	AN924-4D	.NUT		2
-15	41A-97201-12	.LINE ASSY - FS 142 TO BULKHEAD LH		1
-16	41A-97201-3	.LINE ASSY - FS 142 TO BULKHEAD RH		1
-17	41A-97205	.ADAPTER ASSY - SKIN CONNECTION SPECIAL		2
-18	41A-97201-4	.LINE ASSY - BULKHEAD BL-19 RH TO BL-19 LH STATIC		1
-19	AS4580/2	.CLIP - (V35076) (NYLASTIC)		3
-20	MS35207-259	.SCREW		3
	AN960PD10L	.WASHER		3
	MS21042L3	.NUT		3
-21	41A-97201-8	.LINE ASSY - SAFETY VALVE TO BULKHEAD DUMP		1
-22	AN832-4D	.UNION		1
	AN960PD716	.WASHER		1
	AN924-4D	.NUT		1
-23	AN818-4D	.NUT - (TO PREVENT USE OF PLUG)		1
-24	41A-97203-2	.FITTING - GROUND TEST AIR SOURCE		2
-25	41A-97204	.CAP - GROUND TEST AIR SOURCE FITTING		2
-26	41A-97202	.GASKET		2
-27	A1037-012-3	.NUT - (V78533)		2
-28	NAS1201B6A8A	.CHAIN		2
-29	41A-97206	.FITTING - GROUND TEST		1
-30	AN929A4	.CAP ASSY		1
-31	NAS1201B6A11A	.CHAIN		1

-000-

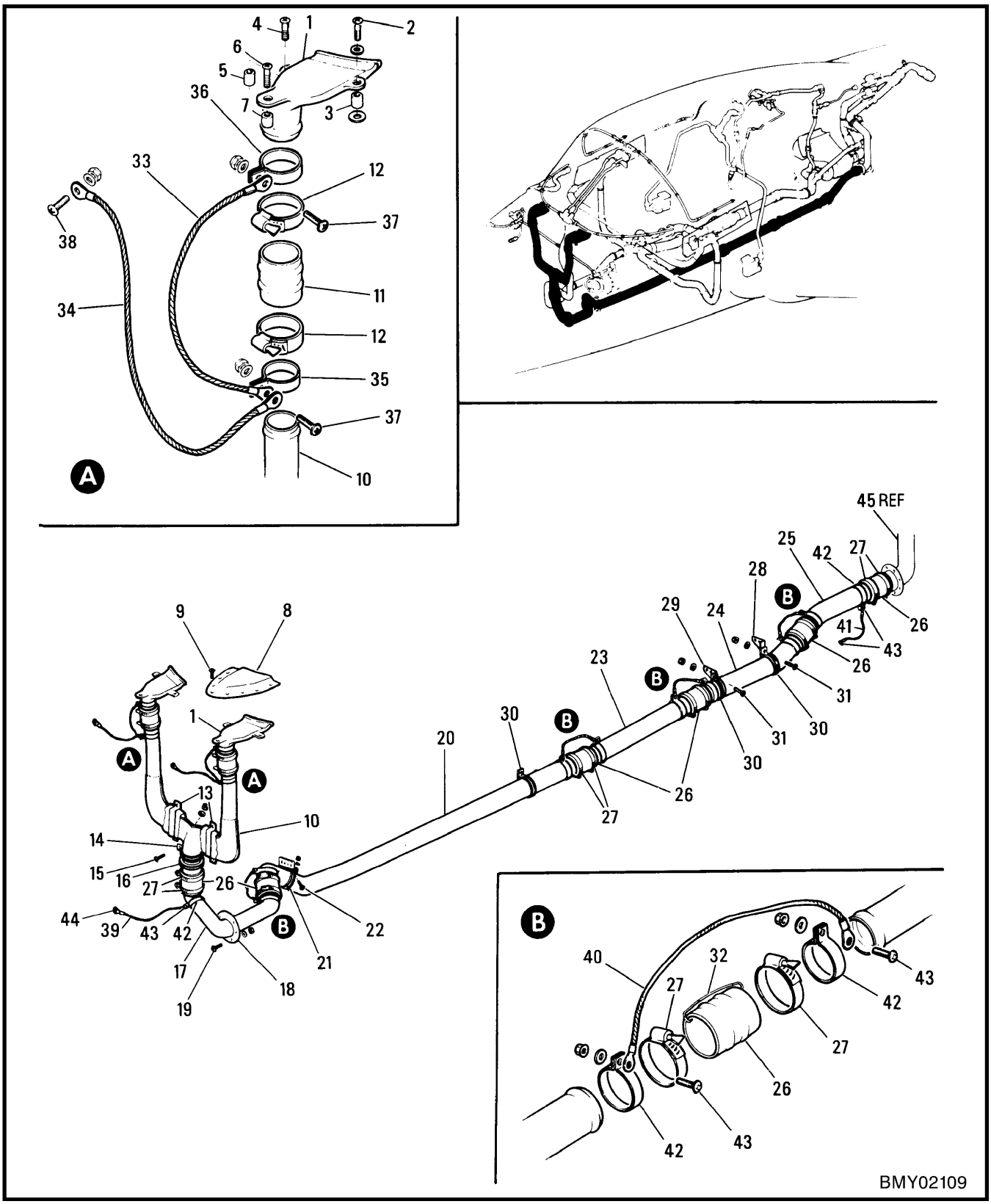

Figure 2-9-4 Windshield Rain Removal System

FIGURE AND INDEX NUMBER	GROUP: HEAT & VENT & PRESSURIZATION MAJOR ASSEMBLY: WINDSHIELD RAIN REMOVAL SYSTEM PART NUMBER		1 2 3 4 5 6 7 NOMENCLATURE	EFFEC-TIVITY	UNITS PER ASSY
2-9-4 -	41A-42000-9		RAIN REMOVAL SYS INSTL - WINDSHIELD (MODIFIED BY NW4528142-1) (SEE FIG. 2-9-2)		NP
- 1	41A-80201		.NOZZLE - RAIN REMOVAL LH		1
	41A-80201-1		.NOZZLE - RAIN REMOVAL RH		1
- 2	MS27039-1-23	*	.SCREW		2
- 3	NAS43DD3-60	*	.SPACER		2
- 4	MS27039-1-21	*	.SCREW		2
- 5	NAS43DD3-47	*	.SPACER		2
- 6	MS27039-1-19	*	.SCREW		2
- 7	NAS43DD3-39	*	.SPACER		2
	AN960PD10L	*	.WASHER		6
- 8	K41A-35008-50	*	.FAIRING ASSY - RAIN REMOVAL LH		1
	K41A-35008-51	*	.FAIRING ASSY - RAIN REMOVAL RH		1
- 9	MS27039-1-07		.SCREW		16
	AN960PD10L	*	.WASHER		16
-10	41A-80203-800		.DUCT ASSY - RAIN REMOVAL		1
-11	712329-15-14		.HOSE - (V70628)		2
-12	AN737TW56-66		.CLAMP		4
-13	41A-80203-20		.CLAMP - RAIN REMOVAL DUCT		2
R	41A-42000-38		.PACKING (V61158)		2
	41A-80203-18		.ANGLE		1
-14	MS21919WH34		.CLAMP		1
-15	MS35207-264		.SCREW		1
	AN960PD10L		.WASHER		1
	MS21042L3		.NUT		1
-16	41A-42000-203		.GROMMET - RAIN REMOVAL DUCT (MAKE FROM G51TB (V03296))		1
-17	41A-80200-800		.DUCT ASSY - RAIN REMOVAL		1
-18	41A-98212-18		.RING - AIR CONDITIONING DUCT SECURING (MAKE FROM 5330-00-599-7708)		1
-19	MS35207-264		.SCREW		6
	AN960PD10L		.WASHER		6
	MS21042L3		.NUT		6
-20	41A-80204-806		.DUCT ASSY - RAIN REMOVAL		1
	41A-80204-24		.ANGLE - SUPPORT		1
-21	751S34-8		.CLIP - (V00502)		1
-22	MS35207-264		.SCREW		2
	AN960PD10L		.WASHER		2
	MS21042L3		.NUT		2
-23	41A-80204-804		.DUCT ASSY - RAIN REMOVAL		1
-24	41A-80204-802		.DUCT ASSY - RAIN REMOVAL		1
-25	41A-98207-800		.DUCT ASSY - FS 275-277		1
-26	712329-2-14		.HOSE - (V70628)		6
-27	AN737TW74-91		.CLAMP		12
-28	41A-80204-22		.ANGLE - SUPPORT		1
-29	41A-80204-20		.ANGLE - SUPPORT		1
R -30	MS21919WCJ32		.CLAMP		3
-31	MS35207-264		.SCREW		2
	AN960PD10L		.WASHER		2
	MS21042L3		.NUT		2
-32	S1296		.STRIP - (V88308) (BONDING)		AR
	NW4528142-1		JUMPER INSTL - BONDING (MODIFYING 41A-420009-9) (SEE SECTION 12)		REF
-33	M83413/8-A04BB		.JUMPER ASSY		2
-34	M83413/8-A06BB		.JUMPER ASSY		2
-35	AN735DC24		.CLAMP		2
-36	AN735DC28		.CLAMP		2
-37	MS35207-263		.SCREW		4
	AN960-10L		.WASHER		8
	MS21042L3		.NUT		4
-38	MS35207-265		.SCREW		2
	AN960JD10L		.WASHER		4
		*	IAW C-12-114-000/CF-449		

FIGURE AND INDEX NUMBER	GROUP HEAT & VENT & PRESSURIZATION MAJOR ASSEMBLY WINDSHIELD RAIN REMOVAL SYSTEM PART NUMBER	1 2 3 4 5 6 7 NOMENCLATURE	EFFEC-TIVITY	UNITS PER ASSY
2-9-4	AN960-10L	.WASHER		2
	MS35338-43	.WASHER-LOCK		2
	MS21042L3	.NUT		2
-39	M83413/8-A08BB	.JUMPER ASSY		1
-40	M83413/8-A05BB	.JUMPER ASSY		4
-41	M83413/8-A06BB	.JUMPER ASSY		1
-42	AN735DC32	.CLAMP		10
-43	MS35207-263	.SCREW		11
-44	MS35207-265	.SCREW		1
	AN960-10L	.WASHER		22
	AN960JD10L	.WASHER		4
	MS35338-43	.WASHER-LOCK		2
	MS21042L3	.NUT		12
-45	41A-98210	DUCT ASSY - (SEE FIG. 2-9-8)		REF
		-000-		

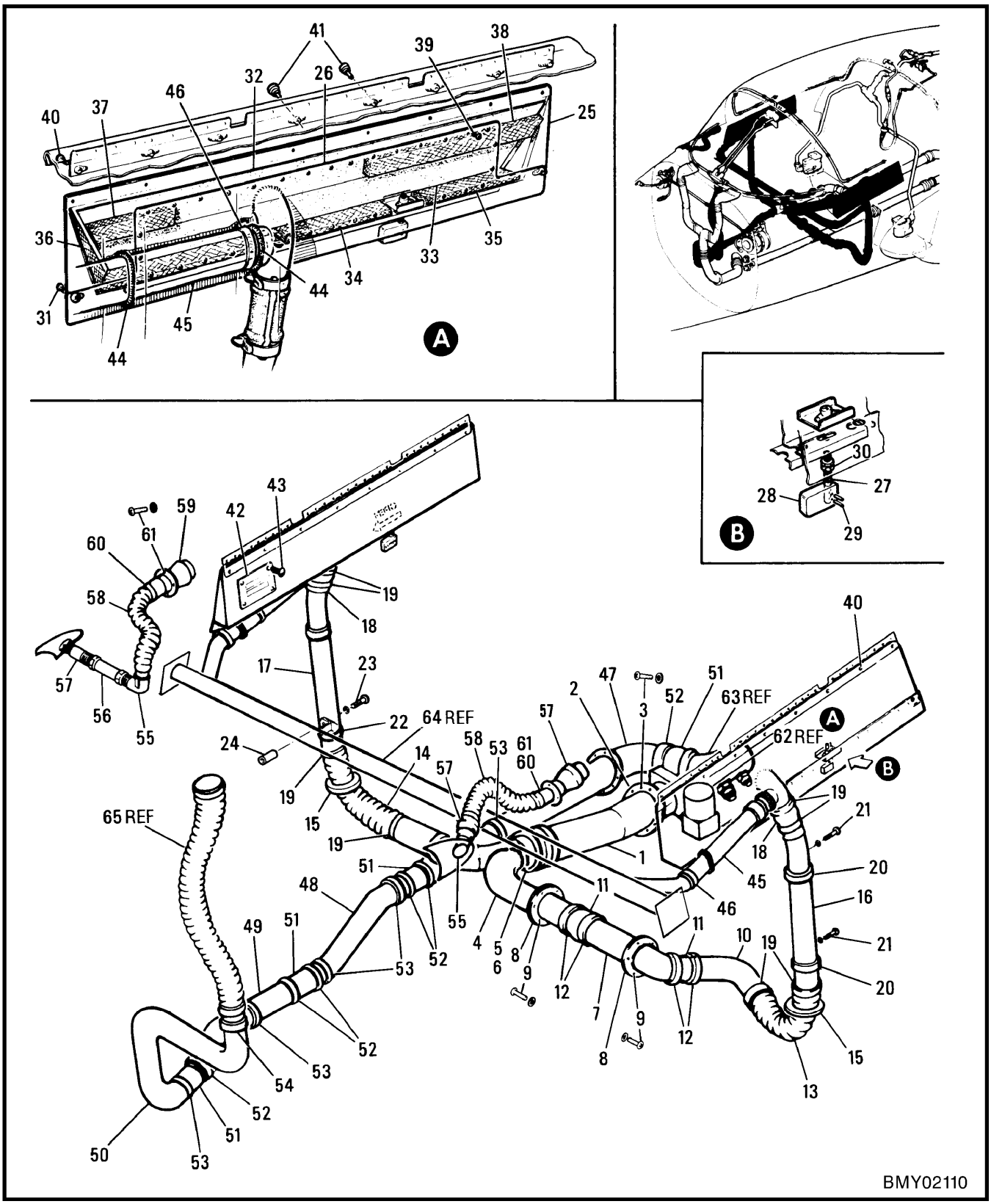

Figure 2-9-5 Cockpit Heat Distribution & Ram Air

FIGURE AND INDEX NUMBER	GROUP HEAT & VENT & PRESSURIZATION MAJOR ASSEMBLY COCKPIT HEAT DISTRIBUTION & RAM AIR PART NUMBER	1 2 3 4 5 6 7 NOMENCLATURE	EFFEC-TIVITY	UNITS PER ASSY
2-9-5 -	41A-42000-5	HEAT DISTRIBUTION SYS INSTL - COCKPIT (MODIFIED BY 41A-95000) (SEE FIG. 2-9-2)		NP
- 1	41A-95202-2	.DUCT ASSY		1
- 2	9470K61	.GASKET		1
- 3	MS35207-264	.SCREW		10
	AN960PD10L	.WASHER		10
- 4	41A-95214	.DUCT ASSY		1
- 5	501-250	.GASKET - (V75829)		1
- 6	N50-250SH	.COUPLING - (V94581)		1
- 7	41A-95208-4	.DUCT ASSY		1
- 8	9470K61	.GASKET		2
- 9	MS35207-264	.SCREW		12
	AN960PD10L	.WASHER		12
-10	41A-95211	.DUCT ASSY		1
-11	S1286-14-12	.HOSE - (V88308)		2
-12	AN737TW56-66	.CLAMP		4
-13	3-1664-14-60-6	.HOSE - (V70628) (FLEXIBLE LH)		1
-14	3-1664-14-68-6	.HOSE - (V70628) (FLEXIBLE RH)		1
-15	41A-42000-221	.SLEEVE		2
-16	41A-95208-800	.DUCT - LH		1
-17	41A-95208-801	.DUCT ASSY - RH		1
-18	S1286-14-12	.HOSE - (V88308)		2
-19	AN737TW56-66	.CLAMP		8
-20	MS21919WDG28	.CLAMP - (LH)		2
-21	MS35207-264	.SCREW		2
	AN960PD10L	.WASHER		2
	MS21042L3	.NUT		2
-22	MS21919WDG28	.CLAMP - (RH)		1
-23	AN3-13A	.BOLT - (RH)		1
-24	NAS43DD3-52	.SPACER - (RH)		1
	AN960PD10L	.WASHER - (RH)		1
	41A-95212-800	.OUTLET ASSY - SHOULDER LH		1
	41A-95212-801	.OUTLET ASSY - SHOULDER RH		1
	41A-95212-802	..OUTLET ASSY - LH		1
	41A-95212-803	..OUTLET ASSY - RH		1
-25	41A-95212-804	...BOX ASSY - LH		1
	41A-95212-805	...BOX ASSY - RH		1
-26	41A-95212-806	...BOX ASSY - LH		1
	41A-95212-807	...BOX ASSY - RH		1
	41A-95700	....HANDLE ASSY		1
-27	41A-95700-2	.....STUD		1
-28	41A-95700-4	.....HANDLE		1
-29	NAS561-2-7	.....PIN		2
-30	AN316-4R	....NUT		2
-31	MS27039-1-09	....SCREW		2
-32	41A-95212-54	...CORK		AR
-33	41A-95212-66	...CORK		AR
-34	41A-95212-56	...FELT - LH		AR
	41A-95212-57	...FELT - RH		AR
-35	41A-95212-58	...FELT		AR
-36	41A-95212-60	...FELT		AR
-37	41A-95212-62	...FELT		AR
-38	41A-95212-64	...FELT		AR
-39	MS35206-241	...SCREW		33
-40	MS27039-1-09	..SCREW - (6 ON LH & 8 ON RH)		8
-41	AN227-10-6	..STUD - (LH)		2
-42	S1389	..NAMEPLATE - (V88308) (RH)		1
-43	AN530-6R4	..SCREW - (RH)		4
-44	41A-42000-211	.GROMMET		4
-45	S1286-12-65	.HOSE - (V88308) (MAKE FROM BULK MATERIAL NAS520-12-480)		2
-46	AN737TW58	.CLAMP		4
-47	41A-95201-2	.DUCT ASSY		1

FIGURE AND INDEX NUMBER	GROUP: HEAT & VENT & PRESSURIZATION MAJOR ASSEMBLY: COCKPIT HEAT DISTRIBUTION & RAM AIR PART NUMBER		1 2 3 4 5 6 7 NOMENCLATURE	EFFEC-TIVITY	UNITS PER ASSY
2-9-5 -48	41A-95201-10		.DUCT ASSY		1
-49	41A-95200-2		.DUCT ASSY		1
-50	41A-95203		.DUCT ASSY		1
-51	S1286-12-12		.HOSE - (V88308)		4
-52	AN737TW56-66		.CLAMP		8
-53	MS21919WDG26		.CLAMP		5
	AN737TW66		.CLAMP		10
-54	MS21919WG24		.CLAMP		1
	MS35207-264		.SCREW		6
	AN960PD10L		.WASHER		6
	S1296		.STRIP - (V88308) (BONDING)		AR
	41A-42000-1	*	RAM AIR SYS INSTL - COCKPIT (SEE FIG. 2-9-2)		NP
-55	AN842-16D	*	.ELBOW - 90 DEGREES		1
-56	583-3/4D1	*	.VALVE		1
-57	C72B47274-1	*	.ADAPTER - (RH)		1
	C72B47274-2	*	.ADAPTER - (LH)		1
-58	3-1124-8-42-6		.HOSE - (V70628) (FLEXIBLE)		2
-59	2110-2		.VENTILATOR ASSY - (V83564) (RAM AIR CABIN) (IAW 41-96291)		2
-60	AN737TW34-38		.CLAMP		4
-61	MS35206-245		.SCREW		8
	AN960PD8L		.WASHER		6
	MS21042L08		.NUT		6
-62	321094-3-1		VALVE ASSY - WINDSHIELD DEMIST (SEE FIG. 2-9-7)		REF
-63	41A-95220		DUCT ASSY - (SEE FIG. 2-9-7)		REF
-64	41A-35091-2		TUBE ASSY - WELDED CROSS (SEE SECTION 3)		REF
-65	3-1664-12-86-6		HOSE - (SEE SECTION 10)		REF
	K41A-95000		KIT - IMPROVED AIR CONDITIONING COCKPIT SHOULDER OUTLETS		NP
	AN530-10R20		.SCREW		1
	NAS43DD3-50		.SPACER		1
	FX90		.GROMMET		1
			-000-		
		*	IAW C-12-114-000/CF-401		

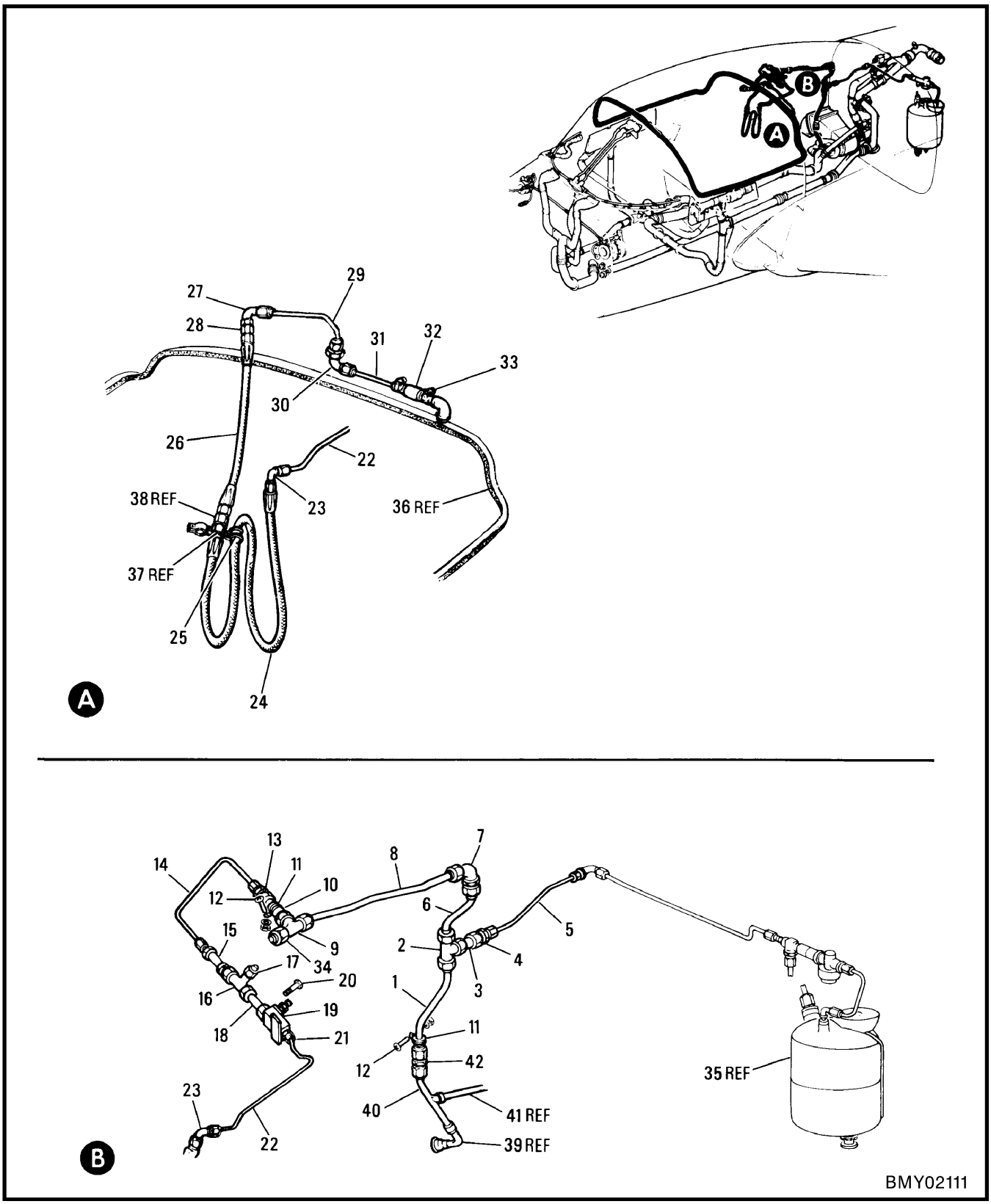

Figure 2-9-6 Cockpit Canopy Seal System

FIGURE AND INDEX NUMBER	GROUP HEAT & VENT & PRESSURIZATION MAJOR ASSEMBLY COCKPIT CANOPY SEAL SYSTEM PART NUMBER	1 2 3 4 5 6 7 NOMENCLATURE	EFFEC-TIVITY	UNITS PER ASSY
2-9-6 -	41A-42000-10	CANOPY SEAL SYSTEM INSTL - COCKPIT (MOD BY C-12-114-000/CF-376)		NP
- 1	41A-95218-36	.LINE ASSY - AIR PRESSURE		1
- 2	AN824-16D	.TEE		1
- 3	41A-95218-30	.LINE ASSY - ADAPTER PIPE		1
- 4	AN919-21D	.ADAPTER		1
- 5	41A-95218-14	.LINE ASSY - HYDRAULIC TANK		1
	S1207-18	..TAPE - (V88308)		AR
- 6	41A-95218-38	.LINE ASSY - AIR PRESSURE		1
- 7	AN833-16D	.ELBOW		1
	AN960PD2116	.WASHER		1
	AN924-16D	.NUT		1
- 8	41A-95218-26	.LINE ASSY - AIR PRESSURE		1
- 9	AN824-16D	.TEE		1
-10	41A-95218-30	.LINE ASSY - ADAPTER PIPE		1
-11	MS21919WH16	.CLAMP		2
-12	MS35207-264	.SCREW		2
	AN960PD10L	.WASHER		2
	MS21042L3	.NUT		2
-13	AN919-21D	.ADAPTER		1
-14	41A-95218-6	.LINE ASSY - FS 236 CANOPY SEAL		1
	S1214-180	..TAPE - (V88308)		AR
-15	279A4TB	.VALVE ASSY - (V91816) (CHECK)		1
-16	AN804D4	.TEE		1
	AN924-4D	.NUT		1
	AN6290-4	.PACKING		1
	41A-97700	.CAP ASSY - PRESSURE TEST CONNECTION		1
-17	AN929A4	..CAP ASSY		1
-18	41A-95218-32	.LINE ASSY - ADAPTER PIPE		1
-19	11182B-CL41	.REGULATOR ASSY - (V07797) FOR BKDN SEE C-13-C05-000/MN-000		1
-20	AN3-16	.BOLT		4
-21	AN815-4D	.UNION		2
	MS28778-4	.PACKING		2
-22	41A-95218-8	.LINE ASSY - FS 236 TO REAR BULKHEAD CANOPY SEAL		1
	S1214-180	..TAPE - (V88308)		AR
-23	AN833-4D	.ELBOW		1
	AN901-4A	.GASKET		1
	AN924-4D	.NUT		1
-24	AE1000612E0210	.HOSE - (V69705)		1
-25	MS21919WDG8	.CLAMP		1
-26	AE1000612B0090	.HOSE - (V69705)		1
-27	AN833-4D	.ELBOW		1
	AN960PD716	.WASHER		4
	AN6289-4D	.NUT		1
-28	AN894D4-3	.BUSHING		1
	MS28777-4	.RING		1
	MS28778-4	.PACKING		1
-29	41A-95218-10	.LINE ASSY - REAR BULKHEAD CANOPY SEAL		1
	S1214-180	..TAPE - (V88308)		AR
-30	AN833-4D	.ELBOW		1
	AN901-4A	.GASKET		1
	AN924-4D	.NUT		1
-31	41A-95218-12	.LINE ASSY - REAR BULKHEAD ELBOW TO HOSE CANOPY SEAL		1
	S1214-180	..TAPE - (V88308)		AR
-32	41A-42000-118	.HOSE - CANOPY SEAL		1
-33	AN737TW22	.CLAMP		2
	S1296	.STRIP - (V88308) (BONDING)		AR
-34	AN929-16	.CAP		1
-35	41A-75023-800	RESERVOIR ASSY - HYDRAULIC (SEE SECTION 8)		REF
-36	41A-30062	SEAL - PRESSURE (CANOPY) (SEE SECTION 3)		REF
-37	315078-4	COUPLING ASSY - (BREAKAWAY) (SEE SECTION 3)		REF

FIGURE AND INDEX NUMBER	GROUP HEAT & VENT & PRESSURIZATION MAJOR ASSEMBLY COCKPIT CANOPY SEAL SYSTEM PART NUMBER	1 2 3 4 5 6 7	NOMENCLATURE	EFFEC-TIVITY	UNITS PER ASSY
2-9-6 -38	AN894D4-3		BUSHING - (SEE SECTION 3)		REF
-39	41A-98207-4		DUCT ASSY - (SEE FIG. 2-9-7)		REF
	K41A-60018	*	KIT - FUEL SYSTEM INSTL AUX TANKS (SEE SECTION 6)		REF
-40	K41A-60018-16		.LINE ASSY - (WELDED)		1
-41	41A-65209-16		.LINE ASSY - SHUT OFF VALVE TO WATER SEP (SEE SECTION 6)		REF
-42	AN815-16D		.UNION		1
			-000-		
		*	IAW C-12-114-000/CD-031		

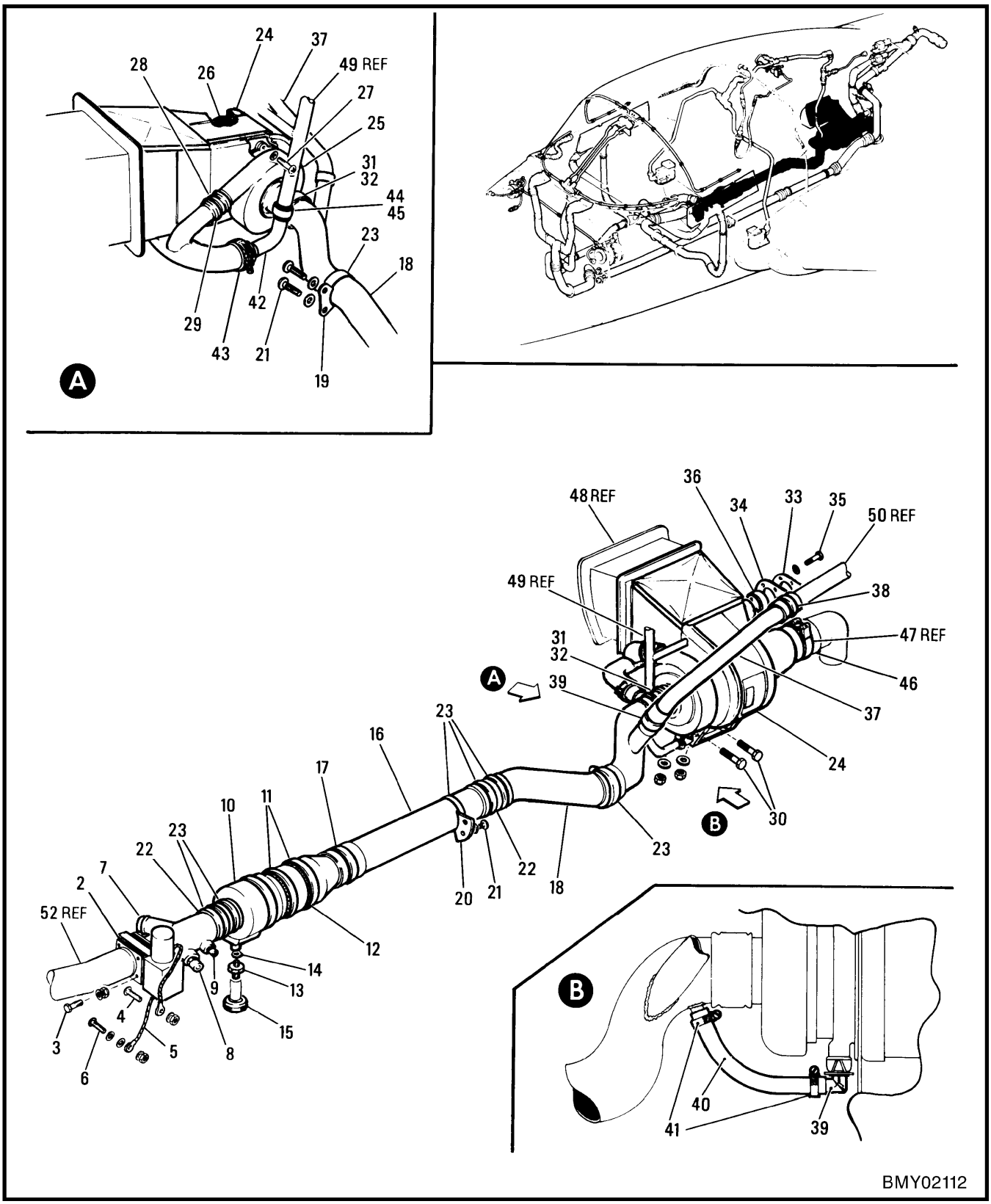

Figure 2-9-7 Water Separator & Distribution System

FIGURE AND INDEX NUMBER	GROUP HEAT & VENT & PRESSURIZATION MAJOR ASSEMBLY WATER SEPARATOR & DISTRIBUTION SYSTEM PART NUMBER	1 2 3 4 5 6 7 NOMENCLATURE	EFFEC-TIVITY	UNITS PER ASSY
2-9-7 -	41A-42000-6	SEPARATOR INSTL - WATER (SEE FIG. 2-9-2)		NP
- 1	321094-3-1	.VALVE ASSY - (V08179) (BUTTERFLY SHUT OFF) (IAW 41A-81100-2) (FOR BKDN SEE C-13-B17-000/MS-000)		1
- 2	AE1204-2-231	.PACKING - (V88308)		2
- 3	AN4-15A	.BOLT		4
	AN960-416L	.WASHER		4
	MS21042L4	.NUT		4
- 4	MS35207-264	.SCREW		1
	AN960PD10L	.WASHER		1
	MS21042L3	.NUT		1
- 5	NO NUMBER	.JUMPER ASSY		1
- 6	MS35206-247	.SCREW		1
	AN936-B8	.WASHER		1
	AN960-8L	.WASHER		2
	AN935-8L	.WASHER		2
	AN340-8	.NUT		2
- 7	41A-95220	.DUCT ASSY		1
	S1246K41-38-40	.WASHER - (V88308)		1
- 8	26220068	.SENSOR - (V80234) (OVERHEAT)		1
- 9	30050-15	.SENSOR - (V08179) (OUTLET TEMPERATURE) (IAW 41A-95106)		1
-10	85020-2	.SEPARATOR ASSY - (V07217) (WATER) (IAW 41A-95100) (FOR BKDN SEE C-13-B14-000/MS-000)		1
	AN123907	..PACKING		2
-11	366-63-462SH	.CLAMP - (V00502)		2
-12	41A-42000-83	.PACKING - (CORK)		AR
-13	41A-95222	.FITTING - DRAIN		1
-14	MS28778-4	.PACKING		1
-15	MS35489-36	.GROMMET		1
-16	41A-95200-4	.DUCT ASSY		1
R 501-250		.SLEEVE - (V75829)		1
-17	N50-250SH	.COUPLING - (V94581)		1
-18	41A-95216	.DUCT ASSY - (MODIFIED)		1
-19	41A-95217-2	.BRACKET		1
-20	41A-95217-4	.BRACKET		1
-21	MS35207-264	.SCREW		4
	AN960PD10L	.WASHER		4
-22	S1286-20-12	.HOSE - (V88308)		2
-23	AN737TW74-91	.CLAMP		6
	S1296	.STRIP - (V88308) (BONDING)		AR
	41A-42000-8	DISTRIBUTION SYS INSTL - FIREWALL TO MAIN SPAR (SEE FIG. 2-9-2)		NP
	682565-1	.REFRIGERATION ASSY - (V08179) (IAW 41A-96100)		1
-24	178052-1	..EXCHANGER ASSY - (V08179) HEAT		1
-25	203910-1	..TURBINE ASSY - (V08179) COOLING (FOR BKDN SEE C-13-B18-000/MS-000)		1
-26	S8171AD22	..PACKING - (V08179) (BETWEEN TURBINE & HEAT EXCHANGER)		1
-27	NAS1351-3H6	..SCREW - (TURBINE TO HEAT EXCHANGER RTNG)		6
	AN960-10L	..WASHER		6
-28	683204	..COUPLING - SLEEVE (V08179)		1
-29	737TW	..CLAMP		2
-30	AN4-6A	.BOLT		2
	AN960-416L	.WASHER		2
	MS21042L4	.NUT		2
-31	501-250	.SLEEVE - (V75829)		1
-32	N50-250SH	.CLAMP - (V94581)		1
-33	712359-501	.SEAL - (V70628) (FLAMEPROOFF LEXIBLE) (IAW 41A-98205-2)		1
-34	41A-98212-36	.RING ASSY - (DUCT SEALING)		1
-35	AN3-4A	.BOLT		11
	AN960-10L	.WASHER		11
-36	AN737TW98-114	.CLAMP		1
-37	41A-98207-2	.DUCT ASSY		1

FIGURE AND INDEX NUMBER	GROUP HEAT & VENT & PRESSURIZATION MAJOR ASSEMBLY WATER SEPARATOR & DISTRIBUTION SYSTEM PART NUMBER	1 2 3 4 5 6 7	NOMENCLATURE	EFFEC-TIVITY	UNITS PER ASSY
2-9-7 -38	24540-125		.COUPLING - (V75829)		2
-39	K41A-40550-2		.FITTING ASSY		1
	MS28777-6		.WASHER		1
	MS29513-112		.PACKING		1
-40	K41A-40550-10		.HOSE		1
-41	AN737TW30		.CLAMP		2
-42	41A-98207-4		.DUCT ASSY		1
	24096-150A		.GASKET - (V75829)		1
-43	18276-150		.COUPLING - (V75829)		1
-44	601-100-SH	*	.COUPLING - (V75829)		1
-45	501-100		.SLEEVE - SEAL COUPLER (V09479)		1
-46	504-350		.SLEEVE - (V75829)		1
	S1296		.STRIP - (V88308) (BONDING)		AR
-47	601-350SH		COUPLING - (SEE FIG. 2-9-8)		REF
-48	41A-96202-48		DUCT ASSY - (SEE SECTION 3)		REF
-49	K41A-60018-16	*	LINE ASSY - FS 260-264 PRESS DISTR (SEE FIG. 2-9-6)		REF
-50	41A-98208-4		DUCT ASSY - (SEE FIG. 2-9-8)		REF
-51	41A-95202-2		DUCT ASSY - (SEE FIG. 2-9-5)		REF
			-000-		
		*	IAW C-12-114-000/CD-031		

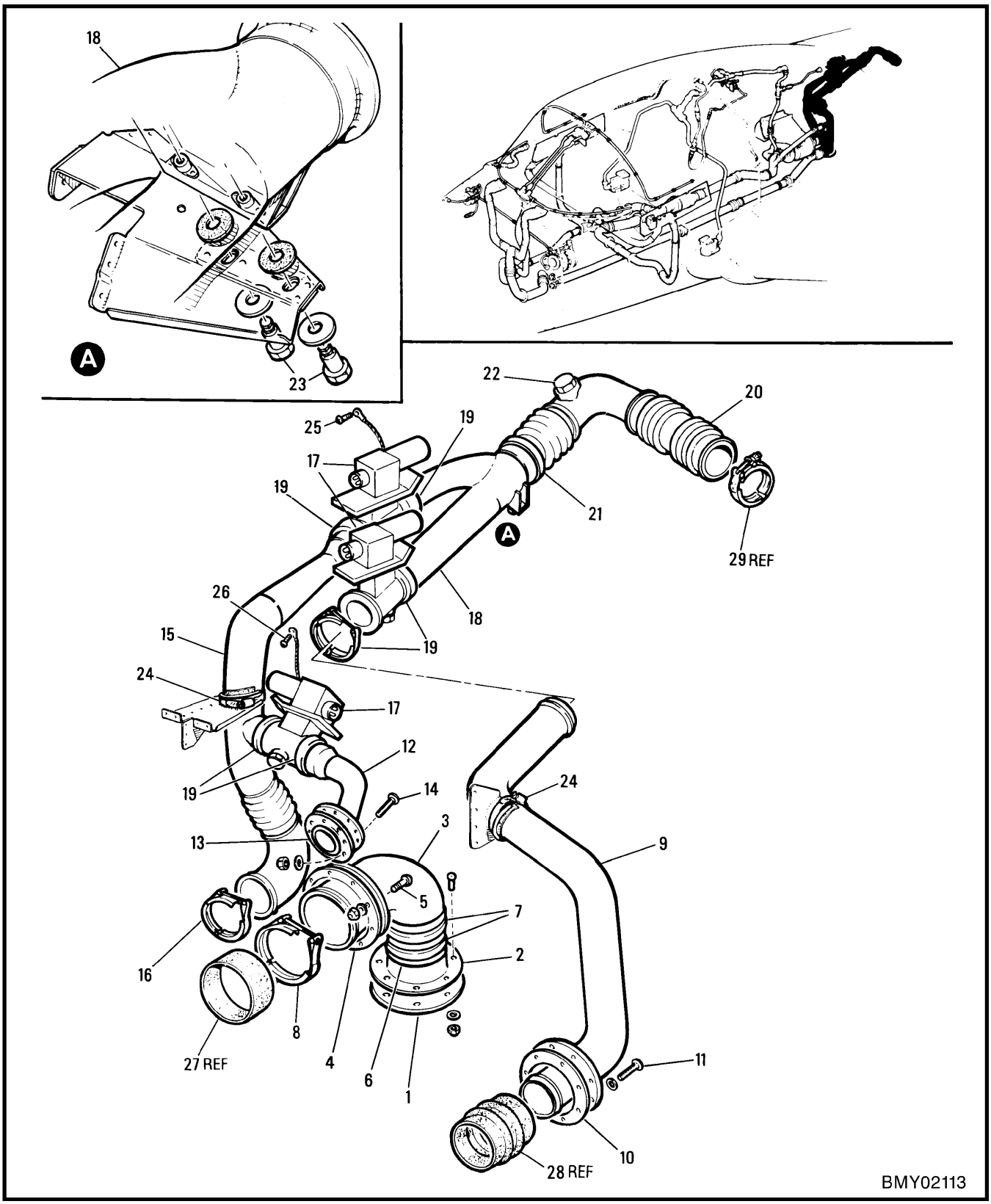

Figure 2-9-8 Engine to Firewall Bleed Air System

	FIGURE AND INDEX NUMBER	GROUP HEAT & VENT & PRESSURIZATION MAJOR ASSEMBLY ENGINE TO FIREWALL BLEED AIR SYSTEM PART NUMBER	1 2 3 4 5 6 7 NOMENCLATURE	EFFEC-TIVITY	UNITS PER ASSY
	2-9-8 -	41A-42000-7	BLEED AIR SYS INSTL - ENGINE TO FIREWALL (SEE FIG. 2-9-2)		NP
R	- 1	41A-96201-18	.RING - INSULATION (V61158)		1
	- 2	41A-96201-4	.DUCT ASSY - EXHAUST FAN (RIVETED)		1
	- 3	41A-96201-2	.DUCT ASSY - EXHAUST FAN		1
R	- 4	41A-96201-16	.GASKET (V61158)		1
	- 5	MS35207-264	.SCREW		10
		AN960-10L	.WASHER		10
		MS21042L3	.NUT		6
	- 6	710043-350-13	.SLEEVE - (V70628)		1
	- 7	823-17	.CLAMP - (V75829)		2
	- 8	601-350SH	.COUPLING - (V75829)		1
	- 9	41A-98210	.DUCT ASSY		1
	-10	11008-7240	.GASKET		1
	-11	MS35207-264	.SCREW		8
		AN960-10L	.WASHER		8
	-12	41A-98208-4	.DUCT ASSY		1
R	-13	41A-98208-20	.GASKET (V61158)		1
	-14	MS35207-264	.SCREW		8
		AN960-10L	.WASHER		8
		MS21042L3	.NUT		8
	-15	41A-98208-2	.DUCT ASSY		1
	-16	24540-200	.COUPLING - (V75829)		1
	-17	321682-1-1	.VALVE ASSY - (V08179) (SHUT OFF) (IAW 41A-95101-2)		3
		400-200C	..PACKING - (V08179)		1
	-18	41A-98209	.DUCT ASSY		1
		24096-200C	.GASKET - (V75829)		6
	-19	18276-200	.COUPLING - (V75829)		6
	-20	41A-98206	.DUCT ASSY - FLEXIBLE ELBOW		1
		24346-250C	.GASKET - (V75829)		1
R	-21	18276-250	.COUPLING - (V75829), OR		1
R		613111A-334-Z	.COUPLING		1
		S1246K41-38-40	.WASHER - (V88308)		1
	-22	41A-98213	.PLUG		1
	-23	S1384-4A4	.BOLT - (V88308)		2
		S1246-16-24-63	.WASHER - (V88308)		2
		S1246T16-24-63	.WASHER - (V88308)		2
	-24	AN737TW74-91	.CLAMP		2
R		41A-42000-201	.PACKING (V48482)		2
		NO NUMBER	.JUMPER ASSY		1
	-25	MS35206-247	.SCREW		1
		MS35335-31	.WASHER		1
		AN960-8L	.WASHER		2
		MS35338-42	.WASHER		2
		AN340-8	.NUT		2
		NO NUMBER	.JUMPER ASSY		1
	-26	MS35207-265	.SCREW		1
		MS35335-32	.LOCK WASHER		1
		AN960-10L	.WASHER		2
		MS35338-43	.WASHER		2
		AN345-10	.NUT		2
	-27	504-350	SLEEVE - (SEE FIG. 2-9-7)		REF
	-28	712329-2-14	HOSE - (SEE FIG. 2-9-4)		REF
R	-29	18276-250	CLAMP - (SEE SECTION 5), OR		REF
R		613111A-334-Z	COUPLING		REF

-000-

SECTION 10

ANTI ICING SYSTEMS

TABLE OF CONTENTS

Figure	Title	Page
2-10-1	Windshield & Canopy Demist Systems	2-10-2

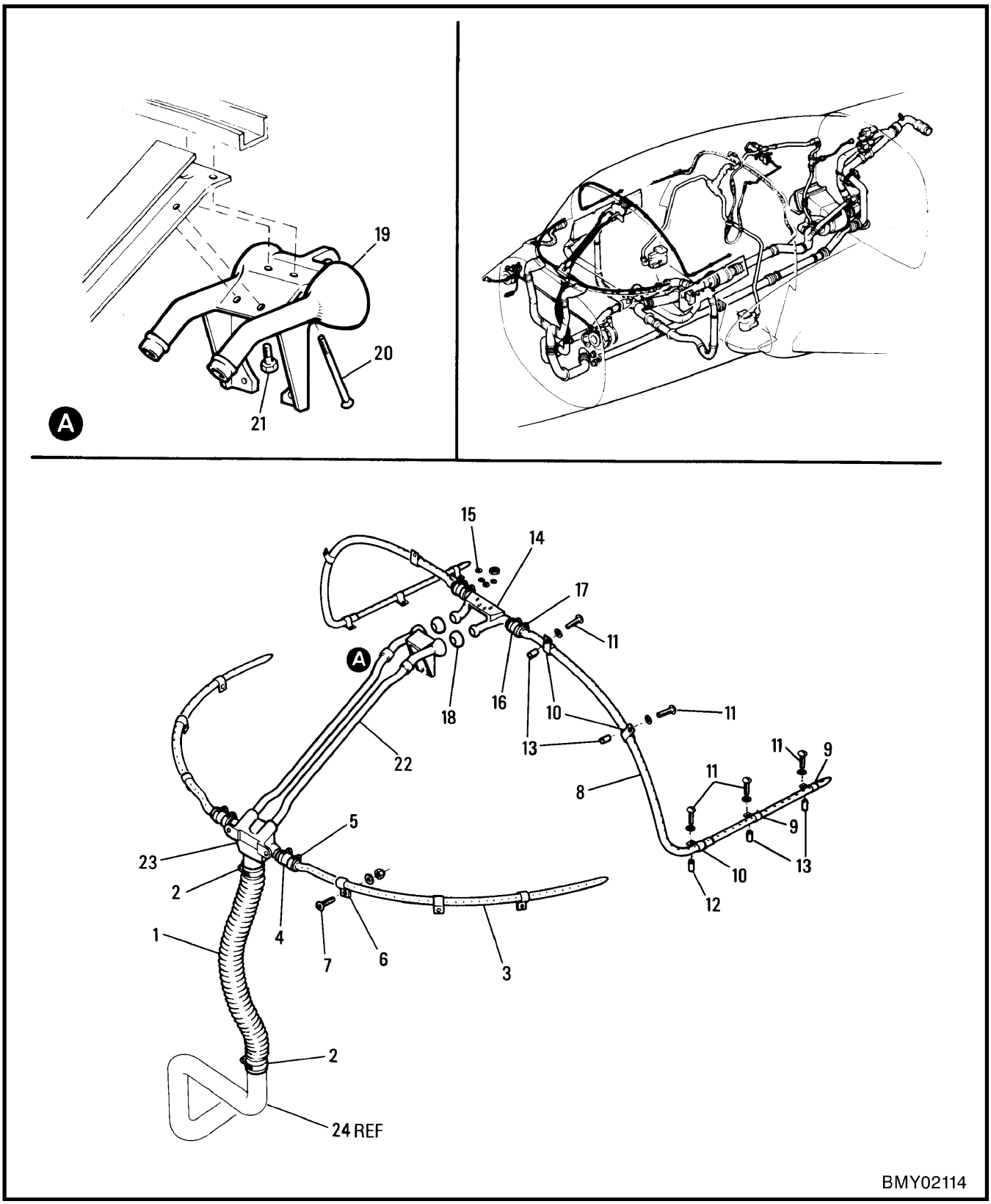

Figure 2-10-1 Windshield & Canopy Demist Systems

FIGURE AND INDEX NUMBER	GROUP: ANTI ICING SYSTEM MAJOR ASSEMBLY: WINDSHIELD & CANOPY DEMIST SYSTEMS PART NUMBER	1 2 3 4 5 6 7 NOMENCLATURE	EFFEC-TIVITY	UNITS PER ASSY
2-10-1 -	41A-42000-2	DEMIST SYS INSTL - WINDSHIELD (SEE SECTION 9)		NP
- 1	3-1664-12-86-6	.HOSE - (V70628) (FLEXIBLE)		1
- 2	AN737TW56-66	.CLAMP		2
- 3	41A-42006-800	.TUBE - WINDSHIELD DEMIST HORIZONTAL LH		1
	41A-42006-801	.TUBE - WINDSHIELD DEMIST HORIZONTAL RH		1
- 4	S1286-5-10	.HOSE - (V88308)		2
- 5	AN737TW22	.CLAMP		4
- 6	AN742D8	.CLAMP		6
- 7	MS35207-264	.SCREW		6
	AN960PD10L	.WASHER		6
	MS21042L3	.NUT		6
	7000	.TAPE - (V36790)		AR
	41A-42000-3	DEMIST SYS INSTL - CANOPY (SEE SECTION 9)		NP
- 8	41A-42007-800	.TUBE ASSY - DEMIST LH		1
	41A-42007-801	.TUBE ASSY - DEMIST RH		1
- 9	AN742D8	.CLAMP		4
-10	AN742D10	.CLAMP		6
R -11	AN520PB10R12	.SCREW, OR		10
R	MS35215-57	.SCREW		10
-12	NAS43DD3-20	..SPACER		2
-13	NAS43DD3-12	..SPACER		8
	AN960PD10L	.WASHER		10
-14	41A-42002-2	.INTERCONNECT - WINDSHIELD DEMIST MALE		1
	AN960PD10	.WASHER		2
-15	S1236-10	.WASHER - (V88308)		80
-16	S1286-6-10	.HOSE - (V88308)		2
-17	AN737TW26	.CLAMP		4
-18	41A-95207	.SEAL		2
	41A-35006	WINDSHIELD STRUCTURE - COCKPIT (SEE SECTION 3)		REF
-19	41A-42003	.INTERCONNECT - WINDSHIELD DEMIST FEMALE		1
-20	NAS560CK3P27	.SCREW		2
-21	NAS501-3-6	.BOLT		2
	AN960PD10	.WASHER		2
	MS21043-3	.NUT		2
-22	41A-42004-800	.TUBE - WINDSHIELD DEMIST VERTICAL LH		1
	41A-42004-801	.TUBE - WINDSHIELD DEMIST VERTICAL RH		1
-23	41A-42001	.MANIFOLD - WINDSHIELD DEMIST		1
-24	41A-95203	DUCT ASSY - (SEE SECTION 9)		REF
		-000-		

SECTION 11

OXYGEN SYSTEM

TABLE OF CONTENTS

Figure	Title	Page
2-11-1	Complete Oxygen System	2-11-2
2-11-2	Cross Cockpit Oxygen Pressure Line (For Snowbird Aircraft Only)	2-11-6

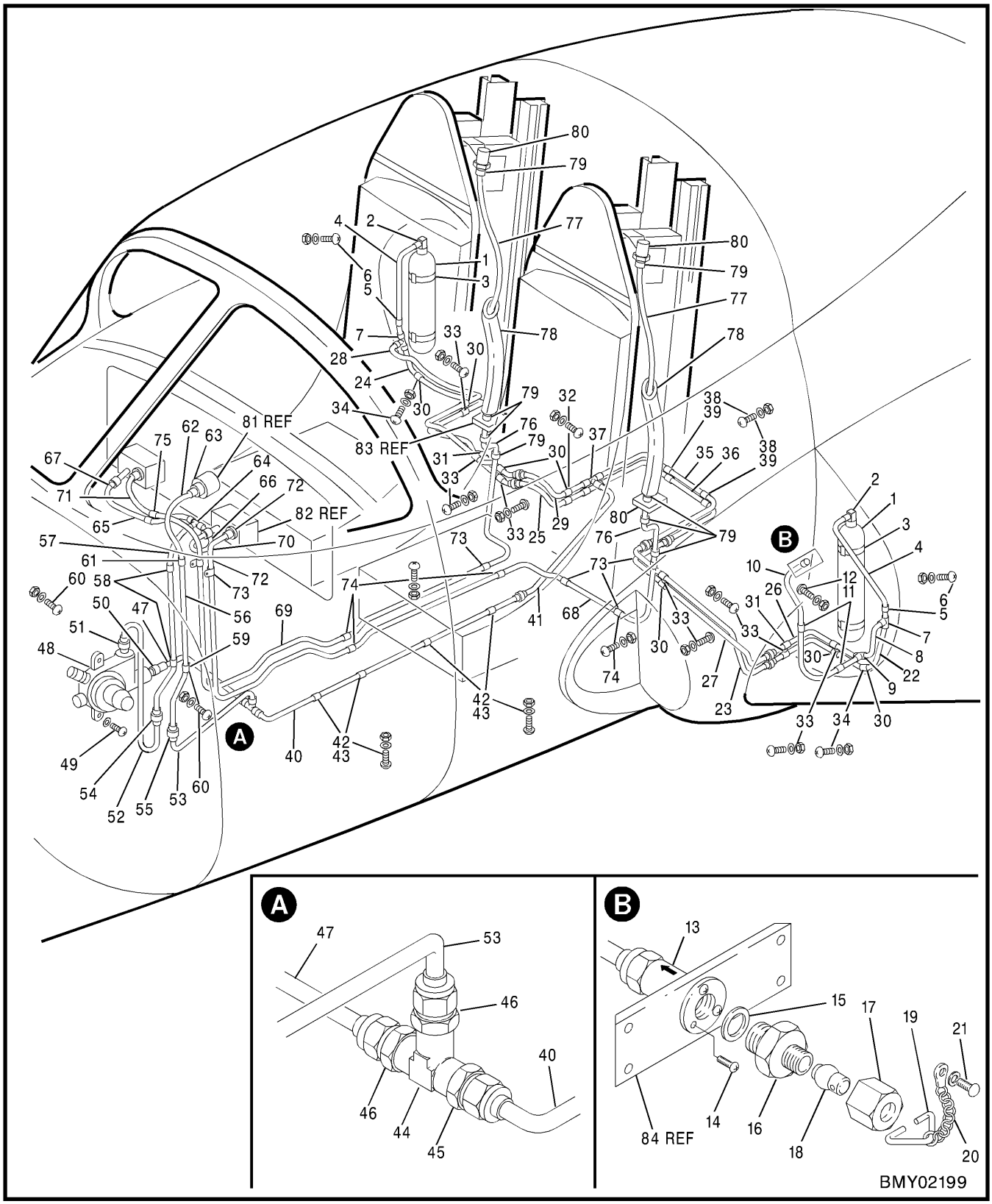

Figure 2-11-1 Complete Oxygen System

FIGURE AND INDEX NUMBER	GROUP OXYGEN SYSTEM MAJOR ASSEMBLY COMPLETE OXYGEN SYSTEM PART NUMBER		1 2 3 4 5 6 7 NOMENCLATURE	EFFEC-TIVITY	UNITS PER ASSY
2-11-1 -	41A-49051		OXYGEN SYS INSTL - (SEE SECTION 3)		NP
	41A-49054		.BOTTLE INSTL - OXYGEN LH		NP
	41A-49054-1		.BOTTLE INSTL - OXYGEN RH		NP
	41A-49054-66		..CYLINDER & VALVE ASSY - OXYGEN		1
- 1	960870		...CYLINDER - (V73168) (OXYGEN)		1
- 2	MS22012-2		...VALVE ASSY - OXYGEN		1
- 3	361-625-525S		..CLAMP - (V75829)		2
- 4	NW4525001-2		.LINE ASSY - CYLINDER TO VALVE LH		1
	MS22012-3		..FITTING		1
	AN800-3		..FITTING		1
	AN805-3		..FITTING		1
	NW4525001-3		.LINE ASSY - CYLINDER TO VALVE RH		1
	MS22012-3		..FITTING		1
	AN800-3		..FITTING		1
	AN805-3		..FITTING		1
	MS28775-008	**	.PACKING		2
- 5	MS21919WDG3	**	.CLAMP - LOOP		2
- 6	MS51957-128	**	.SCREW		2
	WWT700-6	**	.SPACER - (MADE FROM METALLIC TUBE WWT700-6)		2
- 7	AN6015-2		.VALVE ASSY - (OXYGEN CHECK)		2
- 8	NW4525001-6		.LINE ASSY - VALVE TO TEE LH		1
	AN800-3		..FITTING		2
	AN805-3		..FITTING		2
- 9	AN795-3		.TEE		1
-10	NW4525001-24		.LINE ASSY - TEE TO FILLER VALVE		1
	AN800-3		..FITTING		2
	AN805-3		..FITTING		2
	AN800-3		.CONE - (SOLDERED TO LINE)		2
	AN805-3		.NUT		2
-11	AN742-3C		.CLAMP		2
	AN960PD10		.WASHER		4
	MS21042L3		.NUT		2
-12	MS35207-263		.SCREW		2
-13	AER35866-502		.VALVE ASSY - (V07213) FILLER		1
-14	MS35207-265	*	.SCREW		3
	C66A00218		.ADAPTOR KIT - OXYGEN FILLER VALVE		1
-15	C66A00219-1		..WASHER		1
-16	C66C00232-1		..ADAPTOR		1
	C66B00238-1		.CAP ASSY - PRESSURE SEAL		1
-17	C66B00237-1		..NUT - COUPLING		1
-18	C66A00235-1		..INSERT		1
-19	C66A00236-1		..RETAINER		1
-20	41A-49051-32		.CHAIN - SAFETY (COMMERCIAL O GAUGE 4 IN.)		1
-21	MS35206-230		.SCREW		1
	AN960PD6		.WASHER		2
	MS21042L06		.NUT		1
-22	NW4525001-4		.LINE ASSY - VALVE TO KEEL LH		1
	AN800-3		..FITTING		1
	AN805-3		..FITTING		1
R	AN785-3		..COUPLING		1
-23	NW4525001-4A		.LINE ASSY - VALVE TO KEEL LH		1
	AN800-3		..FITTING		2
	AN805-3		..FITTING		2
-24	NW4525001-5		.LINE ASSY - VALVE TO KEEL RH		1
	AN800-3		..FITTING		1
	AN805-3		..FITTING		1
R	AN785-3		..COUPLING		1
-25	NW4525001-5A		.LINE ASSY - VALVE TO KEEL RH		1
	AN800-3		..FITTING		2
	AN805-3		..FITTING		2
-26	NW4525001-10		.LINE ASSY - TEE TO KEEL MEMBER LH		1
	AN800-3		..FITTING		1
	AN805-3		..FITTING		1
R	AN785-3		..COUPLING		1

	FIGURE AND INDEX NUMBER	GROUP OXYGEN SYSTEM MAJOR ASSEMBLY COMPLETE OXYGEN SYSTEM PART NUMBER	1 2 3 4 5 6 7 NOMENCLATURE	EFFEC-TIVITY	UNITS PER ASSY
R	2-11-1 -27	NW4525001-10A	.LINE ASSY - TEE TO KEEL MEMBER LH		1
		AN800-3	..FITTING		2
		AN805-3	..FITTING		2
	-28	NW4525001-8	.LINE ASSY - VALVE TO KEEL MEMBER		1
		AN800-3	..FITTING		1
		AN805-3	..FITTING		1
R		AN785-3	..COUPLING		1
R	-29	NW4525001-8A	.LINE ASSY - VALVE TO KEEL MEMBER		1
		AN800-3	..FITTING		2
		AN805-3	..FITTING		2
	-30	316-3-6	.CLIP - (V00502)		12
	-31	316-5-6	.CLIP - (V00502)		3
	-32	MS35206-248	.SCREW		1
	-33	MS35206-245	.SCREW		6
		AN960D8L	.WASHER		7
R		MS21042L08	.NUT		7
	-34	MS35206-245	.SCREW		2
		AN960D8L	.WASHER		2
		MS21042L08	.NUT		2
	-35	NW4525001-20	.LINE ASSY - LH TO RH ACROSS KEEL		1
		AN785-3	..FITTING		2
	-36	NW4525001-22	.LINE ASSY - LH TO RH ACROSS KEEL		1
		AN785-3	..FITTING		2
	-37	AN795-3	.TEE		1
	-38	316-3-6	.CLIP - (V00502)		4
	-39	MS35206-248	.SCREW		2
		AN960D8L	.WASHER		2
		MS21042L08	.NUT		2
R	-40	NW4525001-26	.LINE ASSY - TEE AT STA 217 TO COUPLING AT STA 200		1
		AN800-3	..FITTING		1
		AN805-3	..FITTING		1
		AN785-3	..FITTING		1
R	-41	NW4525001-26A	.LINE ASSY - COUPLING AT STA 200 TO TEE AT STA 166		1
		AN800-3	..FITTING		2
		AN805-3	..FITTING		2
	-42	316-3-6	.CLIP - (V00502)		4
	-43	MS35206-245	.SCREW		4
		AN960D8L	.WASHER		4
		MS21042L08	.NUT		4
	-44	AN917-1	.TEE		1
R	-45	AN780-3	.ADAPTER		1
R	-46	AN816-3B	.ADAPTER		2
	-47	NW4525001-36	.LINE ASSY - TEE AT STA 166 TO RED VALVE		1
		MS20819-3J	..FITTING		2
		AN818-3	..FITTING		2
	-48	27660-3	.VALVE ASSY - (SCO) (OXYGEN PRESSURE REDUCTION) (FOR BRKDN SEE C-22-227-000/MS-000)		1
	-49	MS35207-264	.SCREW		2
		AN960D10L	.WASHER		2
	-50	S1371-3-5C	.REDUCER - (V88308)		1
		3-5COMP77-545	.PACKING		1
	-51	AN815-5D	.UNION		1
		3-5COMP77-545	.PACKING		2
	-52	41A-49052-30	.LINE ASSY - REGULATOR TO FLOOR OXYGEN		1
R	-53	NW4525001-28	.LINE ASSY - HP SIDE OF RED VALVE TO FL		1
		MS20819-3J	..FITTING		2
R		AN818-3	..NUT, TUBE COUPLING		2
R	-54	AN832-5D	.ADAPTER		1
		AN924-5D	.NUT		1
R	-55	AN832-3	.ADAPTER		1
		AN924-3D	.NUT		1
	-56	NW4525001-32	.LINE ASSY - FLOOR TO PRESSURE GAUGE		1
		MS20819-3J	..FITTING		2

FIGURE AND INDEX NUMBER	GROUP: OXYGEN SYSTEM MAJOR ASSEMBLY: COMPLETE OXYGEN SYSTEM PART NUMBER		1 2 3 4 5 6 7 NOMENCLATURE	EFFEC-TIVITY	UNITS PER ASSY
2-11-1 -	AN818-3		..FITTING		2
-57	41A-49052-34		.LINE ASSY - FLOOR TO REGULATOR OXYGEN		1
-58	316-5-6		.CLIP - (V00502)		2
-59	316-3-6		.CLIP - (V00502)		1
-60	MS35206-246		.SCREW		3
	AN960D8L		.WASHER		3
	MS21042L08		.NUT		3
-61	S1371-3-5C		.REDUCER - (V88308)		1
-62	AE1010119E0140		.HOSE - (V69705)		1
-63	AN816-5D		.NIPPLE		1
-64	AN824-5D		.TEE		1
-65	41A-49055		.LINE, REGULATOR TO DISCONNECT LH		1
	MS22055H12	****	.LINE, REGULATOR TO DISCONNECT LH		1
	AN737TW46	****	.CLAMP		1
	A-1410-6	****	.UNION		1
-66	41A-49056-2		.LINE, REGULATOR TO DISCONNECT RH		1
-67	10011-7		.QUICK DISCONNECT ASSY - (V12282)		2
			OR		
	10011-6A		.QUICK DISCONNECT ASSY - (V12282)		
	NO NUMBER		.SLEEVE - QUICK DISC PROTECTION		2
			(IAW C-12-114-000/CF-371)		
R -68	41A-49055		.LINE - REGULATOR TO DISCONNECT LH		1
R -69	41A-49056-2		.LINE - REGULATOR TO DISCONNECT RH		1
R -70	AN6003T12A		.TUBE ASSY - (LH) INLET		1
R -71	MS22055H24	†	.TUBE ASSY - (RH) INLET		1
R -72	AN737TW46		.CLAMP		4
R -73	316-14-8		.CLIP - (V00502)		8
R -74	MS35207-263		.SCREW		3
	MS35207-265		.SCREW		5
	AN960D10L		.WASHER		5
	MS21042L3		.NUT		5
R -75	MS21919WDG8	†	.CLAMP		2
	MS21919WDG20	†	.CLAMP		1
	MS35207-264	†	.SCREW		1
	AN960PD10	†	.WASHER		1
	MS21042L3	†	.NUT		1
R -76	AN6003T12A		.TUBE ASSY		2
R -77	S1451-24		.HOSE ASSY - (V88308)		2
	MS22055B24		..HOSE ASSY		1
	MS22055H24		...HOSE		1
	MS22058-2		...CONNECTOR TYPE 2		1
R -78	S1453		..SLEEVE - (V88308)		1
R -79	AN737TW46		.CLAMP		8
R -80	AE409-5A		.PLUG - OXYGEN STOWAGE (V69705)		2
R -81	AN6011-18		GAUGE - OXYGEN PRESSURE (SEE SECTION 14)		REF
R -82	19325-3		REGULATOR - OXYGEN DILUTER DEMAND		REF
			OR		
	19325-5		REGULATOR - OXYGEN DILUITER DEMAND		REF
			(SEE SECTION 14)		
R -83	41A-40553		DISCONNECT ASSY - SEAT (SECTION 16)		REF
R -84	NO NUMBER	‡	BRACKET - OXYGEN CHARGING VALVE SUPPORT		REF
			(SEE SECTION 3)		
			-000-		
		†	IAW C-12-114-000/CD-031		
		‡	IAW C-12-114-000/CF-252		
		*	IAW C-12-114-000/CF-479		
		**	IAW C-12-114-000/CF-508		
R					
		****	IAW C-12-114-000/CF-522		

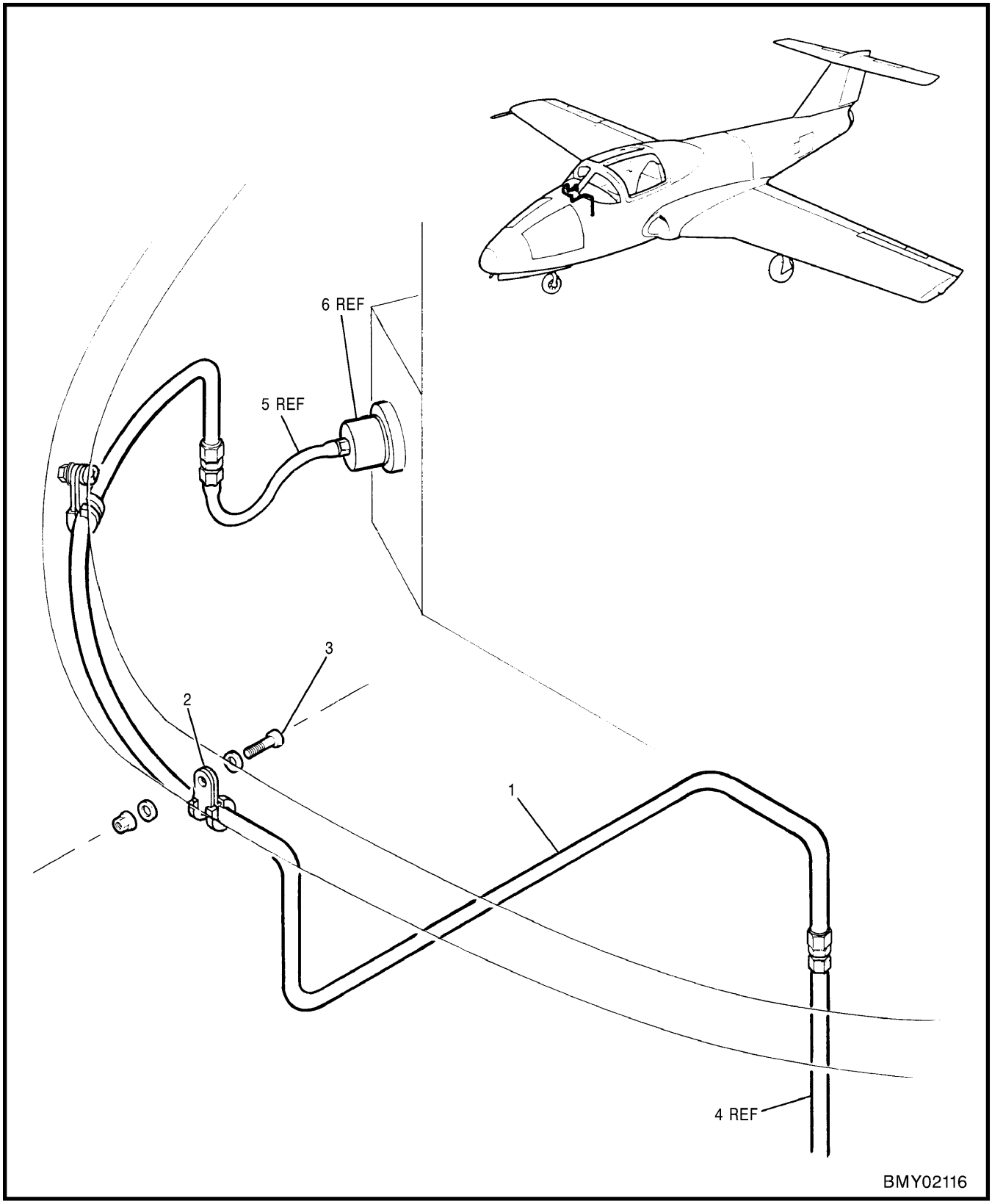

Figure 2-11-2 Cross Cockpit Oxygen Pressure Line (For Snowbird Aircraft Only)

FIGURE AND INDEX NUMBER	GROUP OXYGEN SYSTEM MAJOR ASSEMBLY CROSS COCKPIT OXYGEN PRESSURE LINE PART NUMBER	1 2 3 4 5 6 7 NOMENCLATURE	EFFEC-TIVITY	UNITS PER ASSY
2-11-2 -	NW4513200-1	CROSS COCKPIT GENL ASSY (SEE SECTION 12)	A	REF
	NW4513083-1	.LINE INSTL - OXYGEN PRESS		NP
- 1	NW4513082-1	..LINE		1
- 2	MS21919WH3	..CLAMP		2
- 3	MS35206-268	..SCREW		2
	AN960-10L	..WASHER		4
	MS21042L3	..NUT		2
- 4	41A-49052-32	LINE ASSY - FLOOR TO OXYGEN PRESS GAUGE (SEE FIG. 2-11-1)		REF
- 5	646672-2	HOSE - (V69705) (SEE FIG. 2-11-1)		REF
- 6	AN6011-1B	INDICATOR - (OXYGEN PRESS) (SEE SECTION 14)		REF
		-000-		
	A	FOR SNOWBIRD AIRCRAFT ONLY		

SECTION 12

ELECTRICAL EQUIPMENT

TABLE OF CONTENTS

Figure	Title	Page
2-12-1	Electrical System	2-12-2
2-12-2	Rewire General Assembly (Electrical)	2-12-4
2-12-3	Nose Compartment Electrical Equipment	2-12-8
2-12-4	Nose Compartment Electrical Equipment (Load Monitoring System)	2-12-16
2-12-5	Storage Batteries	2-12-18
2-12-6	Main Distribution & Relay Panels	2-12-20
2-12-7	Nose Compartment Electrical Harnesses	2-12-28
2-12-8	Fuselage Trough Harnesses & Attachments	2-12-36
2-12-9	Cockpit Electrical Equipment	2-12-42
2-12-10	Forward Cockpit Electrical Equipment	2-12-46
2-12-11	Port Console Electrical Equipment	2-12-48
2-12-12	Starboard Console Electrical Equipment	2-12-52
2-12-13	Centre Console Electrical Equipment	2-12-56
2-12-14	Centre Console Electrical Equipment	2-12-60
2-12-15	Centre Console Circuit Breaker Panel	2-12-64
2-12-16	Instrument Panel Shroud Lights	2-12-66
2-12-17	Cockpit Electrical Harnesses	2-12-68
2-12-18	Centre Fuselage Electrical Equipment	2-12-78
2-12-19	Forward Fuselage Instrument Equipment (Load Monitoring System)	2-12-82
2-12-20	Wing Fillet Electrical Harness	2-12-84
2-12-21	Wing Fillet Electrical Harness (Load Monitoring System)	2-12-90
2-12-22	Power Plant Electrical Equipment	2-12-92
2-12-23	Wing Electrical Equipment	2-12-98
2-12-24	Wing Electrical Harnesses	2-12-104
2-12-25	Rear Fuselage Electrical Equipment	2-12-110
2-12-26	Rear Fuselage Electrical Equipment (Load Monitoring System)	2-12-116
2-12-27	Smoke System Electrical (For Snowbird Aircraft Only)	2-12-118
2-12-28	Smoke System Wiring (For Snowbird Arcft Only)	2-12-122
2-12-29	Cross Cockpit Electrical Mod (For Snowbird Arcft Only)	2-12-124

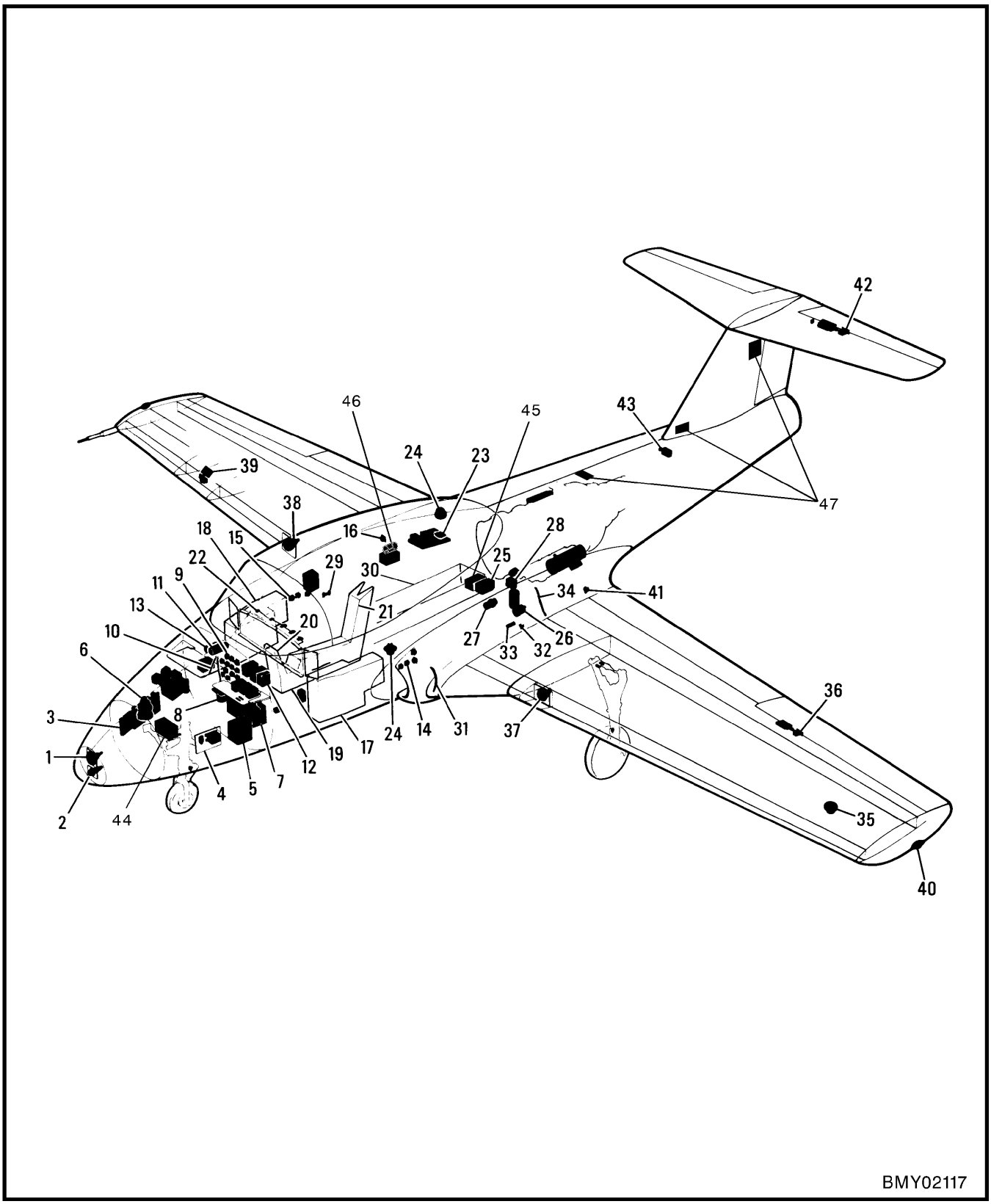

Figure 2-12-1 Electrical System

FIGURE AND INDEX NUMBER	GROUP ELECTRICAL EQUIPMENT MAJOR ASSEMBLY ELECTRICAL SYSTEM PART NUMBER	1 2 3 4 5 6 7 NOMENCLATURE	EFFEC-TIVITY	UNITS PER ASSY
2-12-1 - 1	4571	LAMP ASSY - (TAXI LIGHT) (SEE FIG. 2-12-3)		REF
- 2	MS25219-4	LIGHT ASSY - (GROUND OBSERVER) (SEE FIG. 2-12-7)		REF
- 3	NW4528215-1	PANEL INSTL - MAIN DISTRIBUTION (RH) (MOD) (SEE FIG. 2-12-6)		REF
- 4	41A-42112-82	PANEL INSTL - RELAY (LH) (SEE FIG. 2-12-6)		REF
- 5	41A-51000	BATTERY INSTL - (SEE FIG. 2-12-5)		REF
- 6	673447	GYRO - CONTROL DIRECTIONAL (SEE SECTION 14)		REF
- 7	ASH564B-6	INVERTER - STATIC (NO. 1 & NO. 2) (SEE FIG. 2-12-3)		REF
- 8	ST106N	TRANSMITTER - HYDRAULIC PRESSURE (SEE SECTION 14)		REF
- 9	SPB20-16PSW	RECEPTACLE - (V07213) (DC J10) (SEE FIG. 2-12-9)		REF
-10	41A-42123	TUBE ASSY - NOSE ELEC SHELF (SUPPORT) (SEE FIG. 2-12-3)		REF
R -11	124623-01-14	GYRO - VERTICAL TYPE MD-1 (V35351) (SEE SECTION 14), OR		REF
R	124623-01-10	GYRO - VERTICAL TYPE MD-1 (V35351) (SEE SECTION 14)		REF
-12	45958-10	CONTROL - (V08179) (AIR TEMPERATURE) (SEE FIG. 2-12-10)		REF
R -13	138474-01-01	GYRO - RATE SWITCHING TYPE MC-1 (V35351) (SEE SECTION 14)		REF
-14	SPB22-21PS003	RECEPTACLE - (V07213) (J36) (SEE FIG. 2-12-17)		REF
-15	SPB20-16PS003	RECEPTACLE - (V07213) (J44) (SEE FIG. 2-12-17)		REF
-16	SPB16-8PS003	RECEPTACLE - (V07213) (J30) (SEE FIG. 2-12-17)		REF
-17	41A-42204-2	PANEL ASSY - LH CONSOLE (I) (SEE FIG. 2-12-11)		REF
-18	41A-42204-140	PANEL ASSY - RH CONSOLE (I) (SEE FIG. 2-12-12)		REF
-19	41A-52202	CONSOLE STRUCTURE INSTL - CENTRE (SEE FIG. 2-12-13)		REF
-20	41A-51210	PANEL ASSY - ENGINE AND ELECTRICS (SEE FIG. 2-12-14)		REF
-21	41A-42201-2	PANEL - (SIDE SUPPORT LH) (SEE FIG. 2-12-15)		REF
-22	41A-52011-800	SHROUD & LIGHTING EQUIP. INSTL - INSTRUMENT PANEL (SEE FIG. 2-12-16)		REF
-23	41A-42152-32	PANEL ASSY - RELAY (SEE FIG. 2-12-18)		REF
-24	G8400A8-24	LIGHT ASSY - (V72914) (ANTI COLLISION) (SEE FIG. 2-12-18)		REF
-25	AE320-2C	SENSOR - TYPE 1 (SEE SECTION 14)		REF
-26	21SN41-105 *	SWITCH - (FUEL LOW PRESSURE) (SEE FIG. 2-12-18)		REF
-27	AJ-A4N-176	RELAY - (K2P GROUND POWER) (SEE FIG. 2-12-18)		REF
-28	AN3025-600	RELAY - (KIP GENERATOR REVERSING CURRENT) (SEE FIG. 2-12-18)		REF
-29	C75506	SIGNAL SUMMING UNIT - (V83326) (SEE FIG. 2-12-18)		REF
-30	41A-43012	TROUGH INSTL - FUSELAGE HARNESS (SEE FIG. 2-12-8)		REF
-31	NW4528200-4	WIRING INSTL - LH WING FILLET (SEE FIG. 2-12-20)		REF
-32	MS3506-1	RECEPTACLE - (28VDC EXTERNAL POWER) (SEE FIG. 2-12-22)		REF
-33	41A-42129-2	RELAY ASSY - SYSTEM SHUT OFF DEICE (SEE FIG. 2-12-22)		REF
-34	24418082	CABLE ASSY - (FIRE DETECTOR) (SEE FIG. 2-12-22)		REF
-35	664543	FLUX VALVE - TYPE C2/C (SEE SECTION 14)		REF
-36	MS24149D1	RELAY - (AILERON TRIM TAB CONTROL) (SEE FIG. 2-12-23)		REF
-37	41A-42118	HOLDER - LANDING LAMP (LE PORT) (SEE FIG. 2-12-23)		REF
-38	41A-42118-1	HOLDER - LANDING LAMP (LE STBD) (SEE FIG. 2-12-23)		REF
-39	C75507	LIFT TRANSDUCER - (V83326) (STBD) (SEE FIG. 2-12-23)		REF
-40	AN3033-14	LIGHT ASSY - (NAVIGATION) (PORT) (SEE FIG. 2-12-23)		REF
-41	C75509	TRANSMITTER - (V83326) (STALL WARNING POSN) (SEE FIG. 2-12-23)		REF
R -42	M83536/10-024M	RELAY - (ELEVATOR TAB) (SEE FIG. 2-12-25)		REF
-43	MS24456-1	SWITCH ASSY - (SEE FIG. 2-12-25)		REF
-44	B529	DATA ACQUISITION UNIT (SEE FIG. 2-12-4)		REF
-45	B530	NZ AND ROLL RATE TRANSDUCER (SEE FIG. 2-12-19)		REF
-45	B531	PRESSURE TRANSDUCER MODULE (SEE FIG. 2-12-21)		REF
-47	B532	STRAIN GAUGE SENSOR (SEE FIG. 2-12-26)		REF
		- 000 -		
	*	IAW C-12-114-000/CF-505		

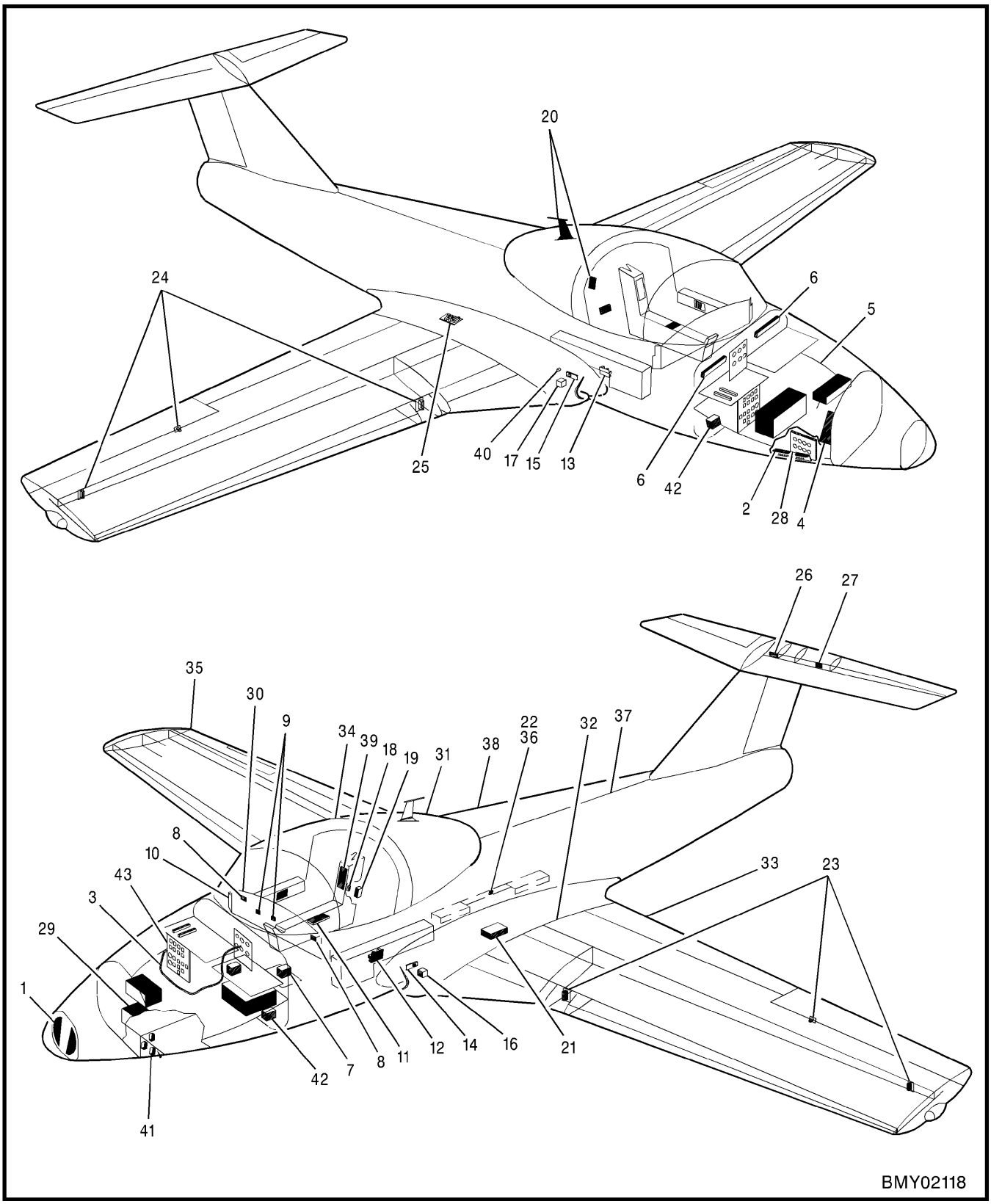

Figure 2-12-2 Rewire General Assembly (Electrical)

FIGURE AND INDEX NUMBER	GROUP ELECTRICAL EQUIPMENT MAJOR ASSEMBLY REWIRE GENERAL ASSEMBLY (ELECTRICAL) PART NUMBER	1 2 3 4 5 6 7 NOMENCLATURE	EFFEC-TIVITY	UNITS PER ASSY
2-12-2 -	NW4528201-1	REWIRE GNL ASSY (SEE SECTION 1)	A	NP
	NW4528201-2	REWIRE GNL ASSY (SEE SECTION 1)	B	NP
- 1	NW4528148-1	.FRAME INSTL - BALLAST (FS 97.30) (SEE SECTION 3)		REF
- 2	NW4528219-1	.CIRCUIT BREAKER INSTL - NOSE (SEE FIG. 2-12-6)		REF
- 3	NW4528142-1	.JUMPER INSTL - BONDING (SEE FIG. 2-12-3, 2-12-18 & 2-12-25, & SECTIONS 1, 2, 3, 4, 5, 6, 7, 9, 13 & 14)		REF
- 4	NW4528135-1	.PANEL INSTL - SEAT EJECT TEST (SEE FIG. 2-12-3)		REF
- 5	NW4528230-1	.EQUIPMENT INSTL - AVIONICS BAY (FS 110 TO 149) (SEE FIG. 2-12-3, 2-12-6 & 2-12-9 & SECTIONS 13 & 14)	A	REF
	NW4528230-2	.EQUIPMENT INSTL - AVIONICS BAY (FS 110 TO 149) (SEE FIG 2-12-3, 2-12-6 & 2-12-9 &SECTIONS 13 AND 14)	B	REF
- 6	NW4528261-1	.EQUIPMENT INSTL - BH FS 149 (COCKPIT) (SEE FIG 2-12-9)		REF
- 7	NW4528231-1	.BOX INSTL - DISCRETE COMPONENTS (COCKPIT) (SEE SECTION 13)	A	REF
	NW4528231-2	.BOX INSTL - DISCRETE COMPONENTS (COCKPIT) (SEE SECTION 13)	B	REF
- 8	41A-90962-1	.EQUIPMENT INSTL - INSTRUMENT PNL (FRONT FACE) (SEE SECTION 14)		REF
- 9	NW4528259	.EQUIPMENT INSTL - INSTRUMENT PNL (FRONT FACE) (SEE SECTION 13)		REF
-10	41A-90964-1	.EQUIPMENT INSTL - RH FACIA PANEL (SEE SECTION 14)		REF
-11	41A-90906-1	.EQUIPMENT INSTL - CENTRE CONSOLE (SEE FIG. 2-12-13, & 2-12-14)		REF
-12	NW4528218-1	.EQUIPMENT INSTL - LH CONSOLE (SEE FIG.2-12-11)		REF
-13	41A-90922-1	.EQUIPMENT INSTL - RH CONSOLE (SEE FIG. 2-12-12)		REF
-14	41A-90954-1	.RELAY INSTL - LH DUCT FAIRING (SEE FIG. 2-12-23)		REF
-15	41A-90949-1	.RELAY INSTL - RH DUCT FAIRING (SEE FIG. 2-12-18)		REF
-16	NW4528080-1	.EQUIPMENT INSTL - LH DUCT FAIRING (SEE FIG. 2-12-18)		REF
-17	NW4528080-2	.EQUIPMENT INSTL - RH DUCT FAIRING (SEE FIG. 2-12-18)		REF
-18	41A-90966-1	.EQUIPMENT INSTL - BH FS 217.5 (SEE FIG. 2-12-9)		REF
-19	41A-90965-1	.EQUIPMENT INSTL - CANOPY ACTUATOR (SEE FIG. 2-12-9)		REF
-20	41A-90971-1	.EQUIPMENT INSTL - CANOPY (SEE FIG. 2-12-9)		REF
-21	41A-90974-1	.EQUIPMENT INSTL - GROUND POWER & REVERSE CURRENT (SEE FIG. 2-12-18)		REF
-22	41A-90970-1	.TERMINAL BOARD INSTL - FUSELAGE THROUGH (SEE FIG. 2-12-18)		REF
-23	41A-90957-1	.EQUIPMENT INSTL - LH WING (SEE FIG. 2-12-23)		REF
-24	41A-90957-2	.EQUIPMENT INSTL - RH WING (SEE FIG. 2-12-23)		REF
-25	41A-90931-1	.TERMINAL BOARD & RELAY INSTL - RH WING FILLET (SEE FIG. 2-12-23)		REF
-26	41A-90967-1	.EQUIPMENT INSTL - HOR/STAB (SEE FIG. 2-12-25)		REF
-27	41A-90969-1	.EQUIPMENT INSTL - ELEVATOR TAB (SEE FIG. 2-12-25)		REF
-28	NW4528215-1	.PANEL INSTL - MAIN DISTRIBUTION (SEE FIG. 2-12-6)		REF
-29	NW4528200-1	.WIRING INSTL - NOSE (SEE FIG. 2-12-7, 2-12-8 & 2-12-20, & SECTIONS 4, 6 & 13)		REF
-30	NW4528200-2	.WIRING INSTL - COCKPIT (SEE FIG. 2-12-17 & SECTION 13)		REF
-31	NW4528200-3	.WIRING INSTL - CANOPY (SEE FIG 2-12-16 & 2-12-18)		REF
-32	NW4528200-4	.WIRING INSTL - LH WING FILLET (SEE FIG. 2-12-20 & 2-12-24 & SECTION 14)		REF
-33	NW4528200-5	.WIRING INSTL - LH WING (SEE FIG.2-12-20		REF
-34	NW4528200-6	.WIRING INSTL - RH WING FILLET (SEE FIG 2-12-20 & 2-12-24 & SECTIONS 4, 13, & 14)		REF
-35	NW4528200-7	.WIRING INSTL - RH WING (SEE FIG. 2-12-24)		REF

FIGURE AND INDEX NUMBER	GROUP ELECTRICAL EQUIPMENT MAJOR ASSEMBLY REWIRE GENERAL ASSEMBLY (ELECTRICAL) PART NUMBER	1 2 3 4 5 6 7 NOMENCLATURE	EFFEC-TIVITY	UNITS PER ASSY
2-12-2 -36	NW4528200-8	.WIRING INSTL - LOWER SECTION (SEE FIG. 2-12-8 & SECTIONS 13 & 14)		REF
-37	NW4528200-9	.WIRING INSTL - ENGINE COMPARTMENT (SEE FIG. 2-12-22)		REF
-38	NW4528200-10	.WIRING INSTL - AFT FUSELAGE (SEE FIG. 2-12-25 & SECTION 13)	C	REF
-39	NW4528236-1	.CIRCUIT BREAKER INSTL - MAIN (SEE FIG. 2-12-15)	D	REF
-40	NW4528144-1	.CONNECTOR INSTL - APX77		REF
-41	NW4528203-1	.CIRCUIT INSTL - DIMMER (SEE FIG. 2-12-3 & 2-12-7)		REF
	NW4528203-2	.CIRCUIT INSTL - DIMMER (SEE FIG. 2-12-3 & 2-12-7)		REF
-42	30242-002	.BATTERY		2
-43	NW4528211-1	.PANEL ASSY - TB & RELAY (FS 140) (SEE FIG. 2-12-6)		REF
	A	FOR ARCFT CT114102		
	B	FOR FLEET		
	C	ARCFT WITH ADF INSTALLED		
	D	ARCFT WITHOUT ADF		
		-000-		

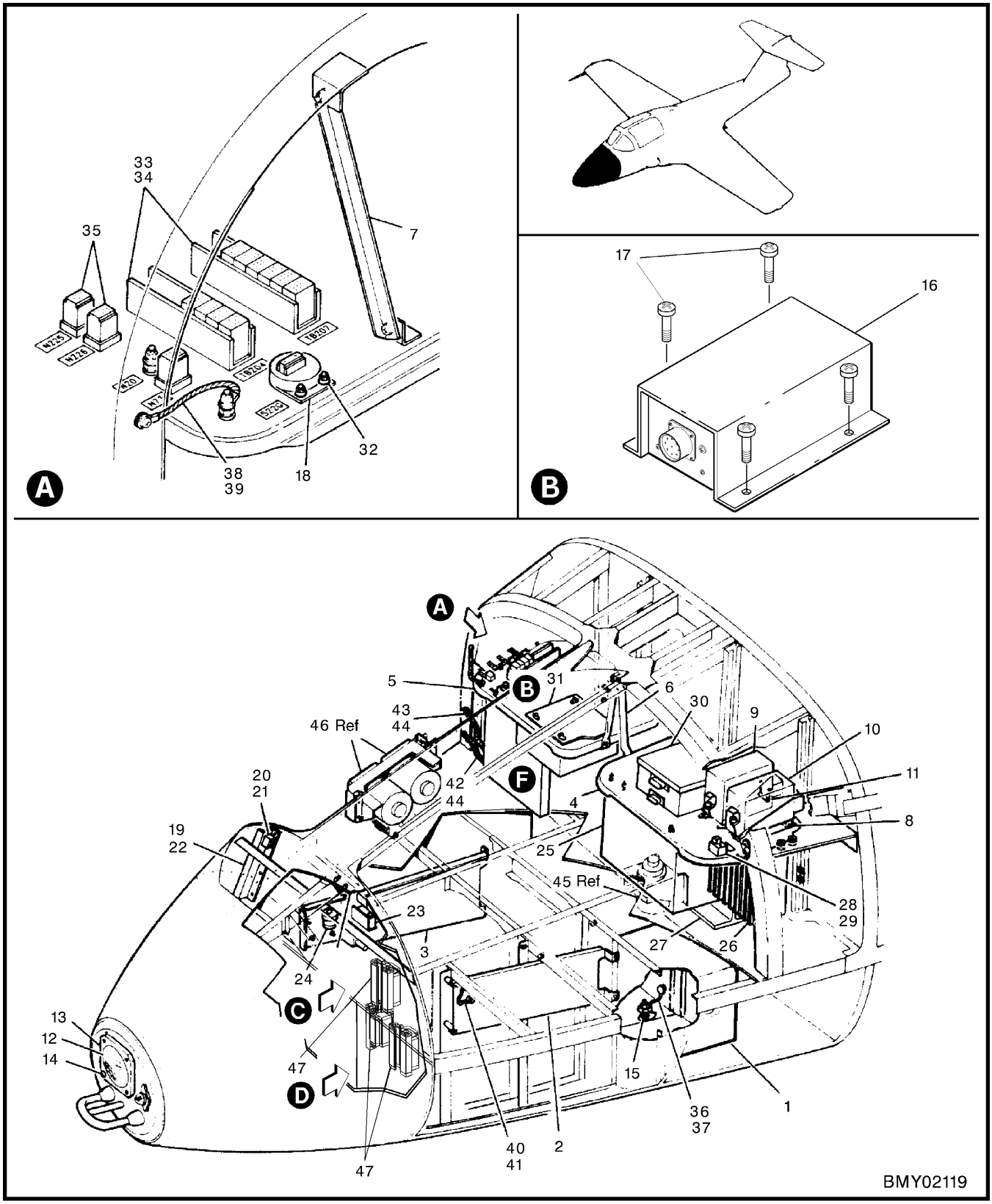

Figure 2-12-3 (Sheet 1 of 3) Nose Compartment Electrical Equipment

FIGURE AND INDEX NUMBER	GROUP ELECTRICAL EQUIPMENT MAJOR ASSEMBLY NOSE COMPARTMENT ELECTRICAL EQUIPMENT PART NUMBER		1 2 3 4 5 6 7 NOMENCLATURE	EFFEC-TIVITY	UNITS PER ASSY
2-12-3 -	41A-42100	*	ELECTRICAL & ELEK EQUIP INST - NOSE COMPT (SEE SECTION 3)		NP
- 1	41A-51000		.BATTERY INSTL - (SEE FIG.2-12-10)		REF
- 2	41A-42112-82		.PANEL INSTL - RELAY (LH) (SEE FIG. 2-12-6)		REF
- 3	NW4528215-1		PANEL INSTL - MAIN DISTRIBUTION (RH) (SEE FIG. 2-12-6)		REF
	41A-42169		PANEL INSTL - NOSE CIRCUIT BREAKER (SEE FIG. 2-12-6)		REF
	41A-42130-8		.SHELF ASSY - NOSE BAY EQUIPMENT LH		1
	41A-42120-32		..SHELF ASSY - NOSE EQUIPMENT BAY LH		1
- 4	41A-42120-34		...TRAY - (LH)		1
- 5	41A-42130-4		.SHELF ASSY - NOSE BAY EQUIPMENT RH		1
- 6	41A-42123		.TUBE ASSY - NOSE ELEC SHELF (SUPPORT)		2
	NAS623-3-3		.SCREW - (SHELF & TUBE RETAINING)		8
	NAS623-3-4		.SCREW - (TUBE UPPER RETAINING)		1
	AN960OD10L		.WASHER		9
	MS21042L3		.NUT		3
- 7	41A-51223-2		.SUPPORT - (RH SHELF)		1
	MS35207-261		.SCREW		2
	AN960D10L		.WASHER		2
	MS21042L3		.SCREW		2
	MS35207-264		..SCREW - (LH BAFFLE RETAINING)		5
	MS35207-261		..SCREW - (RH BAFFLE RETAINING)		5
	AN960D10L		..WASHER		10
	SL201-6AA		.CLIPNUT - (V97393)		2
	MS35206-243		..SCREW		8
	AN960D8L		..WASHER		8
	MS21083N08		..NUT		8
- 8	41531		.BRACKET ASSY - (V80099)		1
- 9	227-28-5A		.CONTROL ASSY - (V80099) (OVERHEAT DETECTION)		1
-10	377-28-2A		.CONTROL ASSY - (V80099) (FIRE DETECTION)		1
	MS35206-231		.SCREW		7
	AN960PD6L		.WASHER		7
-11	RS2A-500-1W		.RESISTOR - (V91637) (R3WB)		1
-12	4571		.LAMP - (TAXI)		1
	4553		.LAMP - (LANDING) (TAXI LAMP MODIFIED BY NW4515009-1)	A	1
-13	41A-42110-4		.RING - (LAMP RETAINING)		1
-14	MS35206-245		.SCREW		4
	AN960DB		.WASHER		4
	41A-42134		.GROUND STUD INSTL - NOSE		NP
-15	9385		.GROUNDING DEVICE - (V03743)		1
	NW4528324-1		.HARNESS ASSY - VOLTAGE REGULATOR		1
-16	VR-1010-24-2A		..VOLTAGE REGULATOR		1
-17	MS35207-263		.SCREW		4
	NAS1149C0316R		..WASHER		4
	MS21076L3N		..NUT PLATE		4
-18	GB300NA111		.SWITCH - (V70192) (S22G) (BAROMETRIC)		1
		*	IAW C-12-114-000/CF-315, 325, 334, 351, 354 & CD-031		
		A	FOR SNOWBIRD AIRCRAFT ONLY		

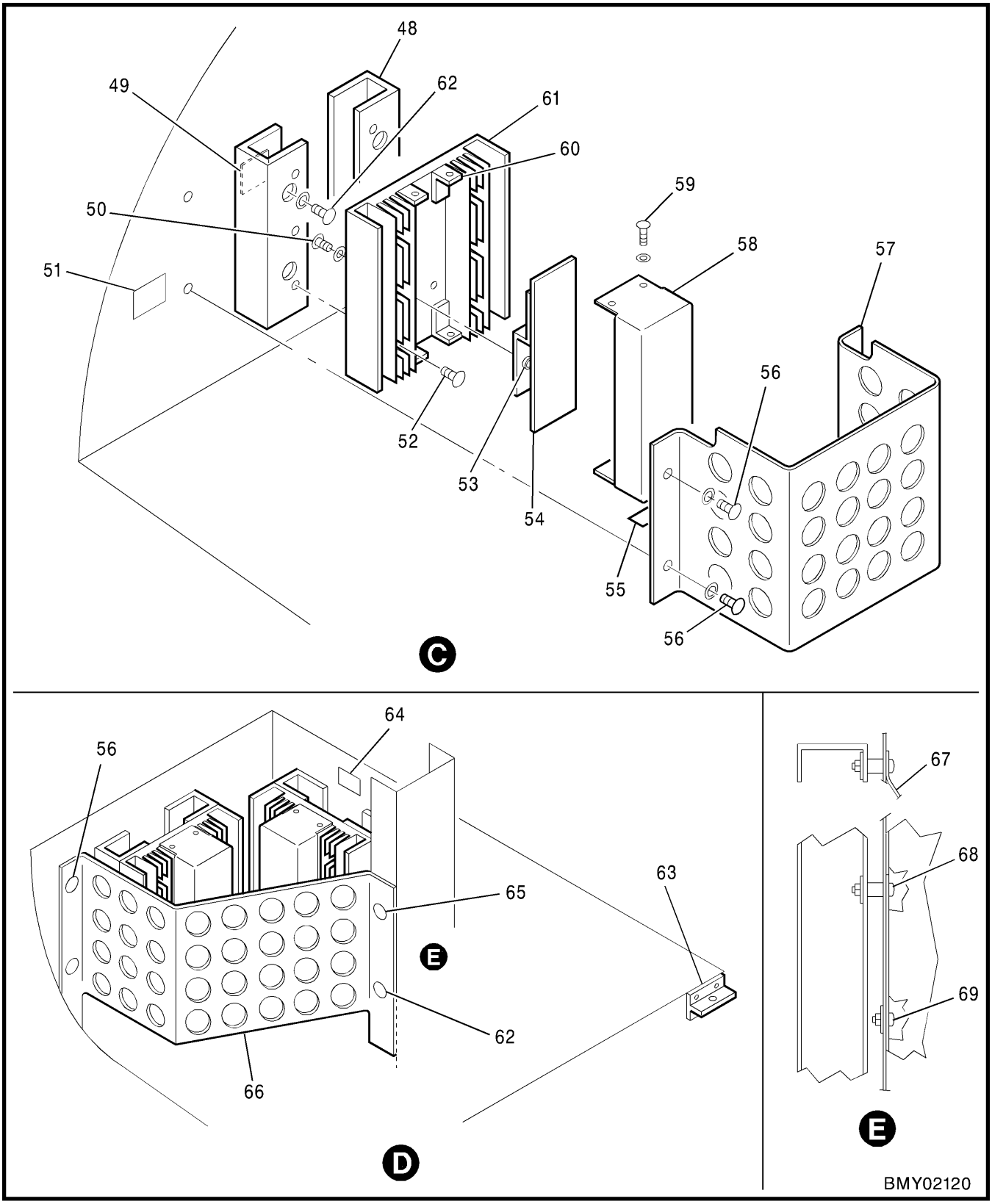

Figure 2-12-3 (Sheet 2 of 3) Nose Compartment Electrical Equipment

FIGURE AND INDEX NUMBER	GROUP ELECTRICAL EQUIPMENT MAJOR ASSEMBLY NOSE COMPARTMENT ELECTRICAL EQUIPMENT PART NUMBER	1 2 3 4 5 6 7 NOMENCLATURE	EFFEC-TIVITY	UNITS PER ASSY
2-12-3	NW4528135-1	PANEL INSTL - SEAT EJECT TEST (SEE FIG. 2-12-2)		NP
	NW4528134-1	.PANEL ASSY		1
-19	NW4528133-1	..PANEL		1
-20	MS25224-3	..GUARD		1
-21	MS35059-30	..SWITCH		1
	NW4528132-1	..LABEL - (SEAT EJECT TEST PANEL)		1
-22	MS35207-228	.SCREW		4
	AN960D6	.WASHER		4
	NW4528230-1	EQUIPMENT INSTL - AVIONICS BAY (FS 110 TO FS 149) (SEE FIG. 2-12-2 & 2-12-6)	B	NP
	NW4528230-2	EQUIPMENT INSTL - AVIONICS BAY (FS 110 TO FS 149 (SEE FIG. 2-12-2 & 2-12-6)	C	NP
-23	M81714/60-20-04	.TERMINAL BLOCK - (TB201)		1
	MS27488-20	.PLUG - END SEAL		AR
	SJT504504	.RACK ASSY - (V58982)		1
	41A-90904-132	.LABEL - (TB201)		1
-24	M81714/63-20S	.MODULE - GROUND (N224)		1
	MS27488-20	.PLUG - END SEAL		AR
	41A-90904-270	.LABEL - (N224)		1
-25	ASH564B-6	.INVERTER - STATIC (V07639) (MG1V & MG2V) (NO. 1 MAIN & NO. 2 STBY)		2
		OR		
	1B1000-1G-RR-901	.INVERTER - STATIC		2
	K41A-58038-116	.CHANNEL ASSY		2
	NAS6604-12	.BOLT		4
	NAS1149D0463K	.WASHER		4
-26	K41A-58040-4	.HEAT SINK		4
	MS35207-269	.SCREW		4
	NAS1149D0332K	WASHER		4
	MS21042L3	.NUT		4
	PHP-24	.TRANSIENT SUPPRESSOR - (V24444) (CZ1A & CZ2A)		2
	MS35206-326	.SCREW		4
	NAS1149DN432K	.WASHER		4
	MS21042-L04	.NUT		4
-27	NW4524000-1	.BRACKET - INVERTER		1
	NAS6606-6	.BOLT		4
	NAS1149D0632K	.WASHER		4
-28	SJT502504	.TERMINAL BLOCK - (V58982) (TB203)		1
	41A-90904-170	.LABEL - (TB203)		1
-29	MS35207-263	.SCREW		1
-30	NW4528458-1	.BOX ASSY - DISCRETE COMPONENTS (SEE SECTION 13)		REF
-31	K41A-58045-20	.PLATE ASSY - MOUNTING		1
	MS35207-263	.SCREW		1
	MS35207-268	.SCREW		4
	NAS43DD3-28	.SPACER		4
-32	MS35206-215	.SCREW		2
	NAS1149DH432K	.WASHER		2
	MS35338-40	.WASHER		2
	MS21042-L04	.NUT		2
	41A-90904-348	.LABEL - (S22G)		1
	B	FOR ARCFT CT114102		
	C	FOR FLEET		

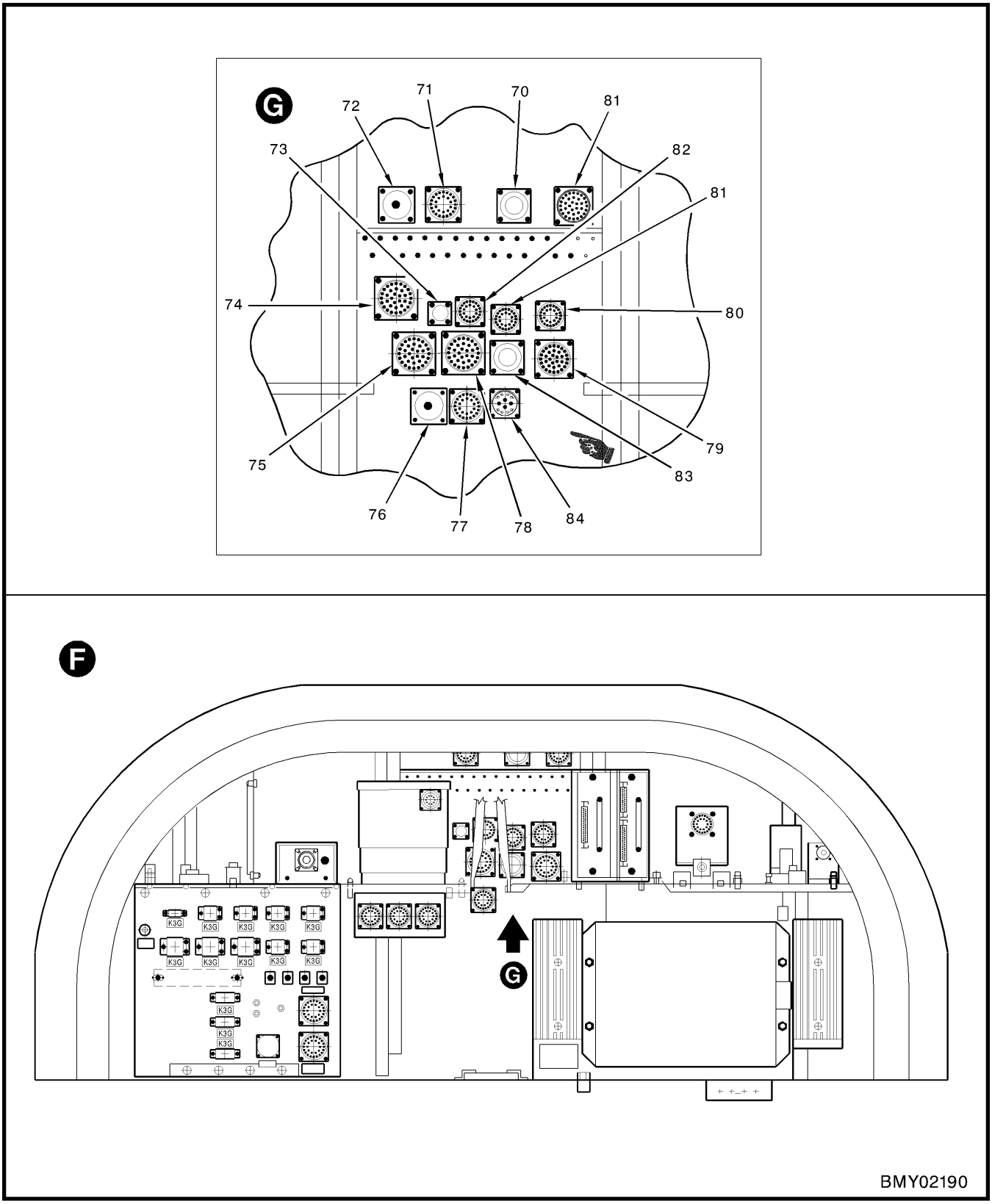

Figure 2-12-3 (Sheet 3 of 3) Nose Compartment Electrical Equipment

FIGURE AND INDEX NUMBER	GROUP ELECTRICAL EQUIPMENT MAJOR ASSEMBLY NOSE COMPARTMENT ELECTRICAL EQUIPMENT PART NUMBER	1 2 3 4 5 6 7 NOMENCLATURE	EFFEC-TIVITY	UNITS PER ASSY
2-12-3 -33	M81714/60-20-02	.TERMINAL BLOCK		1
	M81714/60-20-03	.TERMINAL BLOCK		2
	M81714/60-20-04	.TERMINAL BLOCK		4
	M81714/60-22-04	.TERMINAL BLOCK		1
	M81714/60-22-05	.TERMINAL BLOCK		2
-34	SJT508504	.RACK ASSY - (V58982) (TB204 & TB207)		2
	MS35207-263	.SCREW		2
	41A-90904-172	.LABEL - (TB204)		1
	41A-90904-174	.LABEL - (TB207)		1
-35	M81714/63-20S	.MODULE - GROUND (N73, N225 & N226)		3
	41A-90904-359	.LABEL - (N20)		1
	41A-90904-360	.LABEL - (N73)		1
	41A-90904-266	.LABEL - (N226)		1
	41A-90904-268	.LABEL - (N228)		1
	NW4528142-1	JUMPER INSTL - BONDING (SEE FIG. 2-12-2)		REF
-36	M83413/8-H06DE	.JUMPER ASSY		1
-37	NAS6204-2	.BOLT		1
	AN960JD416	.WASHER		1
	AN960-416L	.WASHER		1
	MS35338-44	.WASHER-LOCK		1
-38	M83413/8-A04BB	.JUMPER ASSY		2
-39	MS35207-265	.SCREW		4
	AN960JD10L	.WASHER		6
	AN960-10L	.WASHER		4
	MS35338-43	.WASHER-LOCK		4
	MS21042L3	.NUT		2
-40	M83413/8-A06BB	.JUMPER ASSY		1
-41	MS35207-265	.SCREW		2
	AN960JD10L	.WASHER		4
	AN960-10L	.WASHER		2
	MS35338-43	.WASHER-LOCK		2
	MS21042L3	.NUT		2
-42	M83413/8-A08BB	.JUMPER ASSY		1
-43	M83413/8-A10BB	.JUMPER ASSY		1
-44	MS35207-265	.SCREW		4
	AN960JD10L	.WASHER		8
	AN960-10L	.WASHER		4
	MS35338-41	.WASHER-LOCK		2
	MS35338-43	.WASHER-LOCK		2
	MS21042L3	.NUT		4
-45	ST106N	TRANSMITTER - HYDRAULIC PRESSURE (SEE SECTION 14)		REF
-46	AE322-3B	REGISTER - TYPE 2 ACCELEROMETER (SEE SECTION 14)		REF
-47	NW4528202-1	.DIMMER MODULE		3
	MS20426AD5-5A	..RIVET		8
	MS20426AD3-4A	..RIVET		38
	MS20470AD5-8A	..RIVET		4
	MS21075L3	..NUT		19
	PR1422G	..SEALANT		AR
	340	..JOINT COMPOUND		1
	MS20426AD5-6A	..RIVET		6
	NAS1097AD3-4A	..RIVET		4
-48	NW4528194-1	..BRACKET ASSY		6
-49	NW4528428-1	..DOUBLER		1
-50	D20418-14	..POST		6
-51	NW4528433-2	..LABEL - (LW2)		1
-52	MS35206-246	..SCREW		18
-53	MS21042-04	..NUT		6
-54	NW4528170-1	..PCB ASSY		3
-55	NW4528433-1	..LABEL - (LW1)		1
-56	MS35207-263	..SCREW		4

FIGURE AND INDEX NUMBER	GROUP ELECTRICAL EQUIPMENT MAJOR ASSEMBLY NOSE COMPARTMENT ELECTRICAL EQUIPMENT PART NUMBER	1 2 3 4 5 6 7 NOMENCLATURE	EFFEC-TIVITY	UNITS PER ASSY
2-12-3 -57	NW4528251-1	..GUARDPLATE		1
-58	NW4528107-1	..COVER		3
-59	MS35206-227	..SCREW		12
-60	NAS1033A06	..PLATE - RIGHT ANGLE		12
-61	NW4528262-1	..HEAT SINK		3
-62	MS35207-264	..SCREW		16
-63	NW4528235-1	..CLIP - GROUNDING		1
-64	NW4528433-3	..LABEL - (LW3)		1
-65	MS35207-246	..SCREW		1
-66	NW4528252-1	..GUARDPLATE		1
-67	NW4528252-3	..GUARDPLATE	D	1
-68	MS35207-250	..SCREW	D	1
-70	SPB22-41PSW	.CONNECTOR		1
-70	10-36675-18	.BULKHEAD SEAL - (E3)		2
-71	SPB20-16PSW	.CONNECTOR		1
-72	MS3181-18CA	.CONNECTOR		1
-73	MS119E12-8	.CONNECTOR		1
-74	MS119E24-61X	.CONNECTOR		1
-75	SPB24-61PSW	.CONNECTOR		1
-76	MS3181-16CA	.CONNECTOR		1
-77	SPB2-41PS	.CONNECTOR		1
-78	SPB24-61PS	.CONNECTOR		1
-79	SPB22-41PS	.CONNECTOR		1
-80	SPB20-39PS	.CONNECTOR		1
-81	MS3119E20-16	.CONNECTOR		1
-82	MS3119E20-41	.CONNECTOR		1
R -83	10-36675-18	.BULKHEAD SEAL - (E4)		1
R -84	M3472L14-12S	.CONNECTOR - (J6MR)	E	1
	D	CONFIGURATION FOR ARCFT WITHOUT ADF INSTALLED		
	E	A/C 114054, 114064 & 114116 ONLY (C-12-114-000/CD-044)		

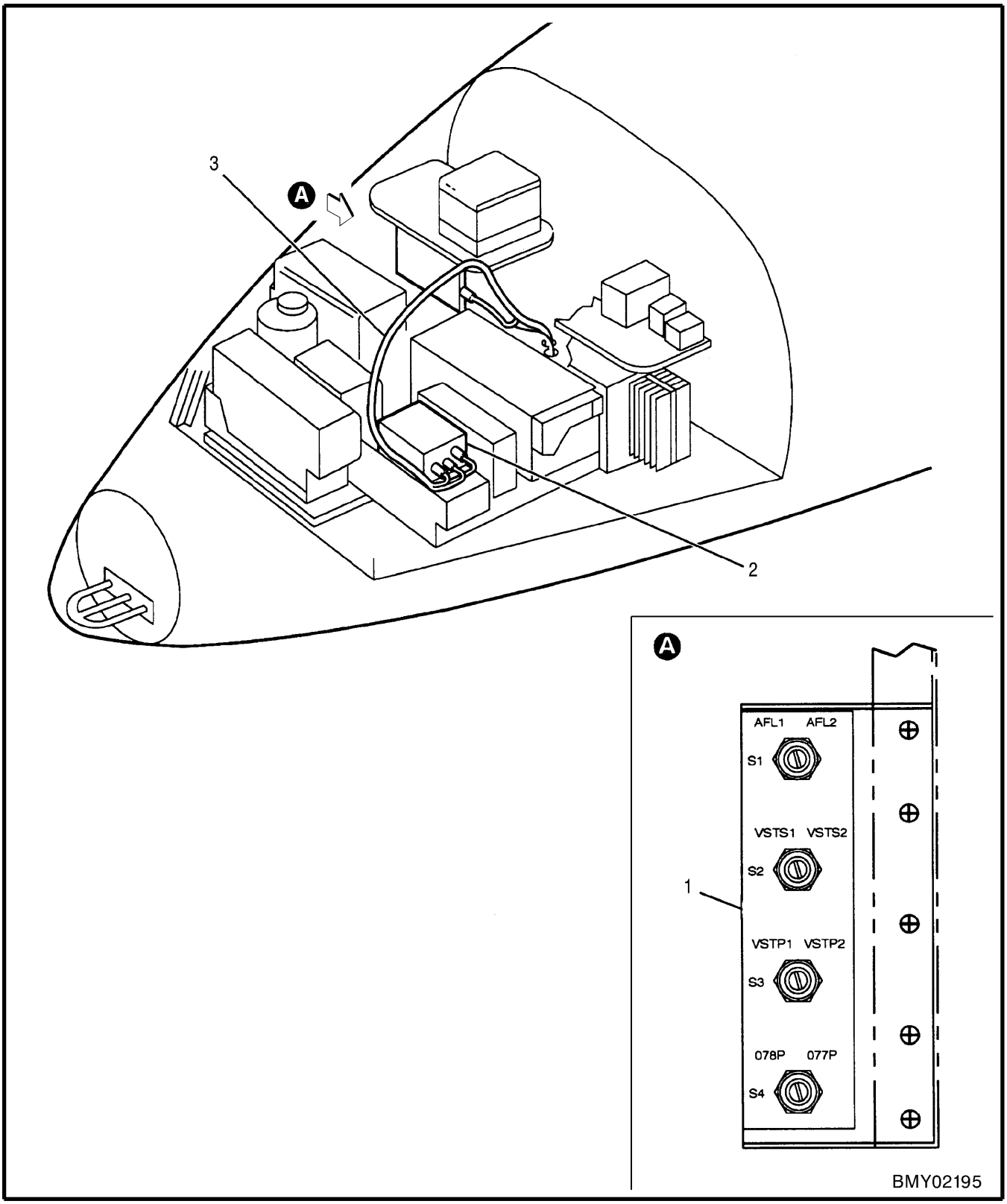

Figure 2-12-4 Nose Compartment Electrical Equipment (Load Monitoring System)

FIGURE AND INDEX NUMBER	GROUP ELECTRICAL EQUIPMENT MAJOR ASSEMBLY NOSE COMPARTMENT ELECTRICAL EQUIPMENT (LOAD MONITORING SYSTEM)		EFFEC-TIVITY	UNITS PER ASSY
	PART NUMBER	1 2 3 4 5 6 7 NOMENCLATURE		
2-12-4 -1	CAE9522094-1	SWITCH		4
	8015	.LABEL		1
-2	B529	DATA AQUISITION UNIT		1
		OR		
	C10117-1 *	DATA AQUISITION UNIT W/ENGINE MONITORING SYSTEM	A	1
-3	NW4529022-1	CABLE ASSY		1
	NW4529024-1	CABLE ASSY		1
	NW4529030-1	CABLE ASSY		1
		-000-		
	A	A/C 114054, 114064 & 114146 ONLY		
	*	C-12-114-000/CD-044 (INFO ONLY)		

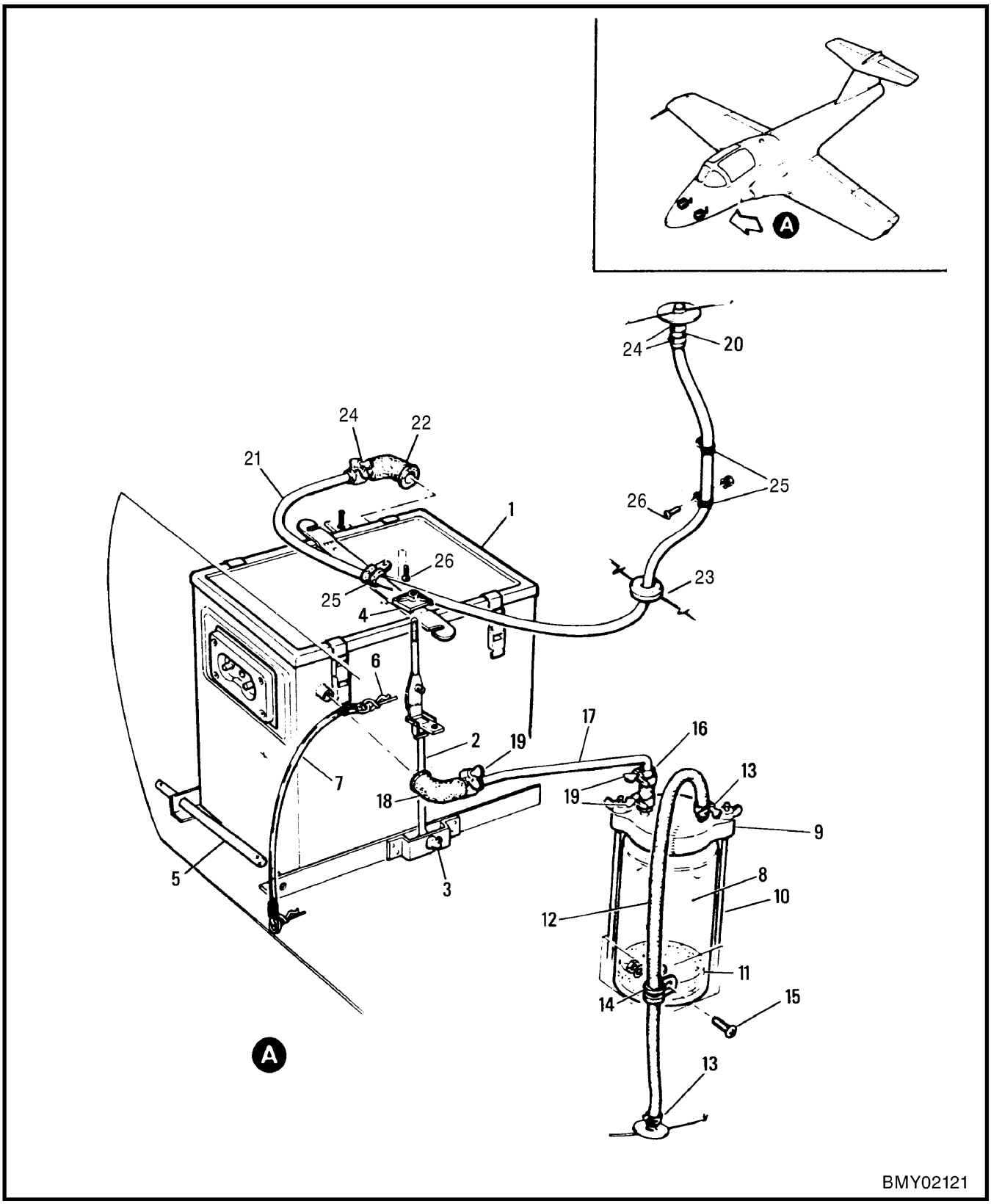

Figure 2-12-5 Storage Batteries

FIGURE AND INDEX NUMBER	GROUP ELECTRICAL EQUIPMENT MAJOR ASSEMBLY STORAGE BATTERIES PART NUMBER		1 2 3 4 5 6 7 NOMENCLATURE	EFFEC-TIVITY	UNITS PER ASSY
2-12-5 -	41A-51000		BATTERY INSTL - (SEE FIG. 2-12-3)		NP
- 1	30242-002		.BATTERY - (NICKEL CADMIUM) (COMPLETE WITH CONTAINER & COVER)		2
- 2	S1417-2	*	.ROD ASSY		4
	SCB83314-2	*	..CATCH - SUITCASE		4
- 3	MS20392-1C11		.PIN		4
	AN960D6L		.WASHER		4
	MS24665-130		.COTTER PIN		4
- 4	41A-51000-74	*	.TAB		4
- 5	41A-51000-16		.ROD - BATTERY SECURING		2
- 6	AN415-2	*	.PIN		4
- 7	NO NUMBER	*	.CABLE - (MIL-W-1511)		AR
	128-2VC	*	.SLEEVE		8
- 8	S1416		.JAR - (V88308)		2
- 9	S1413		.COVER ASSY - (V88308)		2
	S1420		..SEAL - (V88308)		1
-10	S1414-1		.BOLT ASSY - (V88308)		4
	AN960D10L		.WASHER		4
R -11	S1415		.SPONGE - (V88308), OR		2
R	249149		.SPONGE		1
-12	41A-51000-28		.HOSE - JAR TO FS 146 EXHAUST VENT (MADE FROM SYNTHETIC RUBBER 5/16 ID X 1/2 OD AMS 3207 SHORE HARD 25-35)		2
-13	AN737TW22		.CLAMP		4
-14	MS21919WDG8		.CLAMP		2
-15	MS35206-244		.SCREW		2
	AN960D8L		.WASHER		2
	MS21042L08		.NUT		2
-16	41A-51000-36		.HOSE - (BATTERY TO JAR)		2
-17	41A-51000-32		.TUBING - BATTERY DRAIN TO JAR LH (MADE FROM 5/16 OD X .028 ID MIL-T-8506 TYPE 304)		1
	41A-51000-30		.TUBING - BATTERY DRAIN TO JAR RH (MADE FROM 5/16 OD X .028 ID MIL-T-8506 TYPE 304)		1
-18	9555A		.ELBOW - (V74144)		2
-19	AN737TW22		.CLAMP		6
-20	41A-51000-36		.HOSE - (BATTERY INTAKE VENT) (MADE FROM SYNTHETIC RUBBER 5/16 ID X 3/32 OD AMS3207 SHORE HARD 25-35)		2
-21	41A-51000-76		.TUBING - BATTERY INTAKE VENT LH (MADE FROM NYLON TUBING 0.312 OD AS PER CMS 534.04)		1
	41A-51000-77		.TUBING - BATTERY INTAKE VENT RH (MADE FROM NYLON TUBING 0.312 OD AS PER CMS 534.04)		1
-22	9555A		.ELBOW - (V74144)		2
-23	MS35489-38		.GROMMET		2
-24	AN737TW22		.CLAMP		6
-25	MS21919WDG5		.CLAMP		6
-26	MS35206-244		.SCREW		6
	AN960D8L		.WASHER		6
	MS21042L08		.NUT		6
			-000-		
		*	IAW C-12-114-000/CF-382		

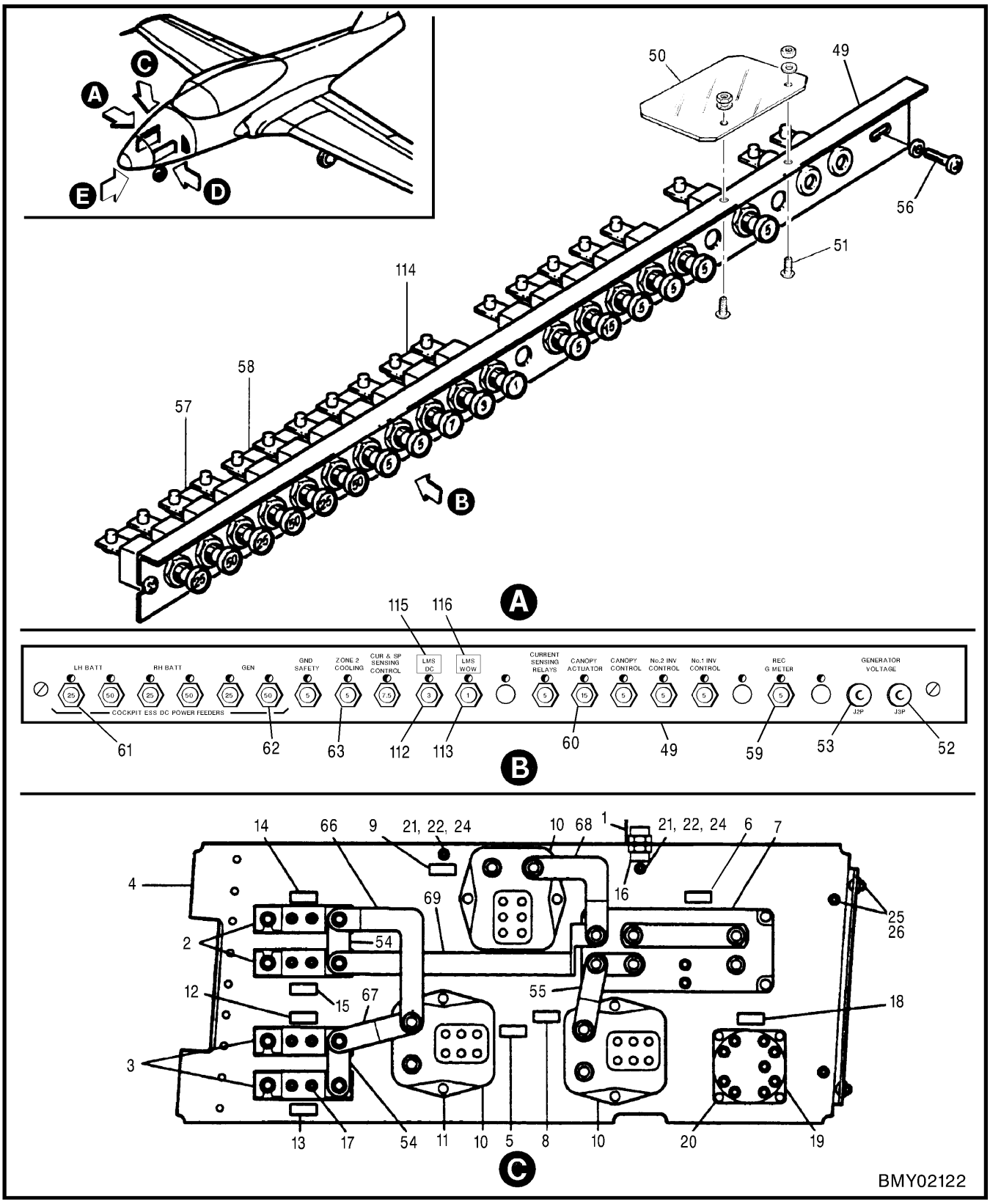

Figure 2-12-6 (Sheet 1 of 3) Main Distribution & Relay Panels

FIGURE AND INDEX NUMBER	GROUP ELECTRICAL EQUIPMENT MAJOR ASSEMBLY MAIN DISTRIBUTION & RELAY PANELS PART NUMBER	1 2 3 4 5 6 7 NOMENCLATURE	EFFEC-TIVITY	UNITS PER ASSY
2-12-6 -	NW4528215-1	PANEL INSTL - MAIN DISTRIBUTION (RH) (MOD) (SEE FIG. 2-12-3)		REF
	NW4528213-1	.PANEL ASSY - MAIN DISTRIBUTION (RH)		REF
	NW4528214-1	..PANEL ASSY - MAIN DISTRIBUTION		REF
- 1	NW4528208-1	..GROUND CLIP		1
- 2	FLLE	..LIMITER - (V07693) (F2P F3P)		2
	FSH	..MOUNTING - (V07693) (LIMITER)		2
	NW4528140-1	..INSULATOR		2
- 3	FLLA	..LIMITER - (V07693) (F1V & F2V)		2
	FSH	..MOUNTING - (V07693) (LIMITER)		2
	NW4528140-1	..INSULATOR		2
	NW4528215-1	PANEL INSTL - MAIN DISTRIBUTION (SEE FIG. 2-12-2)		NP
	NW4528214-1	.PANEL ASSY - MAIN DISTRIBUTION		1
- 4	NW4528213-1	..PANEL ASSY		1
- 5	41A-90904-248	..LABEL - (K6P)		1
- 6	NW4528193-8	..LABEL - (K10P)		1
- 7	A848KBH	..RELAY - (K10P)		1
- 8	41A-90904-246	..LABEL - (K4P)		1
- 9	41A-90904-254	..LABEL - (K3P)		1
-10	AJ-A4N-176	..CONTACTOR - (LCR) (K3P, K4P, K6P)		3
-11	MS35207-280	..SCREW		6
	AN960KD416L	..WASHER		6
-12	41A-90904-260	..LABEL - (F1V)		1
-13	41A-90904-294	..LABEL - (F2V)		1
-14	41A-90904-252	..LABEL - (F2P)		1
-15	41A-90904-262	..LABEL - (F3P)		1
-16	1N4048R	..DIODE		1
-17	MS24693-274	..SCREW		8
-18	41A-90904-258	..LABEL - (K9P)		1
-19	C600-A4N	..RELAY - (V35344) (K9P)		1
-20	MS35206-245	..SCREW		4
	AN960KD8L	..WASHER		4
-21	41A-42212-56	.TUBE		4
-22	NAS43DD4-24	.SPACER		2
-23	NAS43DD4-26	.SPACER		2
-24	MS35207-266	.SCREW		6
	AN960D10L	.WASHER		2
-25	NW4528247-1	.ANGLE		1
-26	MS35207-263	.SCREW		10
	AN960D10L	.WASHER		6
	NW4528200-1	WIRING INSTL - NOSE (SEE FIG. 2-12-2)		REF
-27	MS27212-1-6	.TERMINAL BOARD - (TB100A)		1
-28	MS18029-1L-6	.COVER ASSY		1
-29	MS35206-215	.SCREW		2
	NAS1149FN416P	.WASHER		2
	NAS1149FN616P	.WASHER		6
	MS21042-04	.NUT		2
	MS21042-06	.NUT		6
	NAS1062-1	.STRIP		2
	NAS1149FN616P	.WASHER		6
	41A-42112-82	PANEL INSTL - RELAY (LH) (SEE FIG. 2-12-3)		NP
	41A-42112-72	.PANEL ASSY - RELAY (LH)		1
-30	41A-42112-70	..PANEL - RELAY		1
-31	41A-42112-16	..ANGLE		1
-32	41A-42112-44	..ANGLE		1
-33	41A-42112-42	..ANGLE		1
-34	41A-42112-56	..TUBE		4
-35	NAS43DD4-26	..SPACER		4
-36	MS35207-266	.SCREW		4

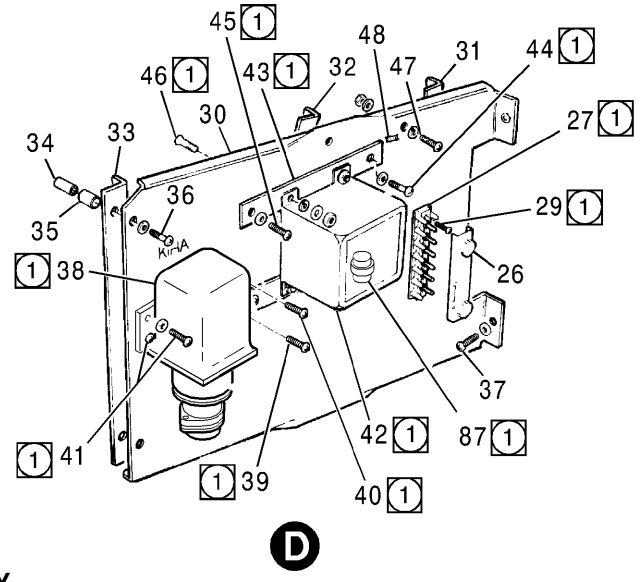

EFFECTIVITY

1 For aircraft without C-12-114-000/CD-046 embodied.

2 For aircraft with C-12-114-000/CD-046 embodied.

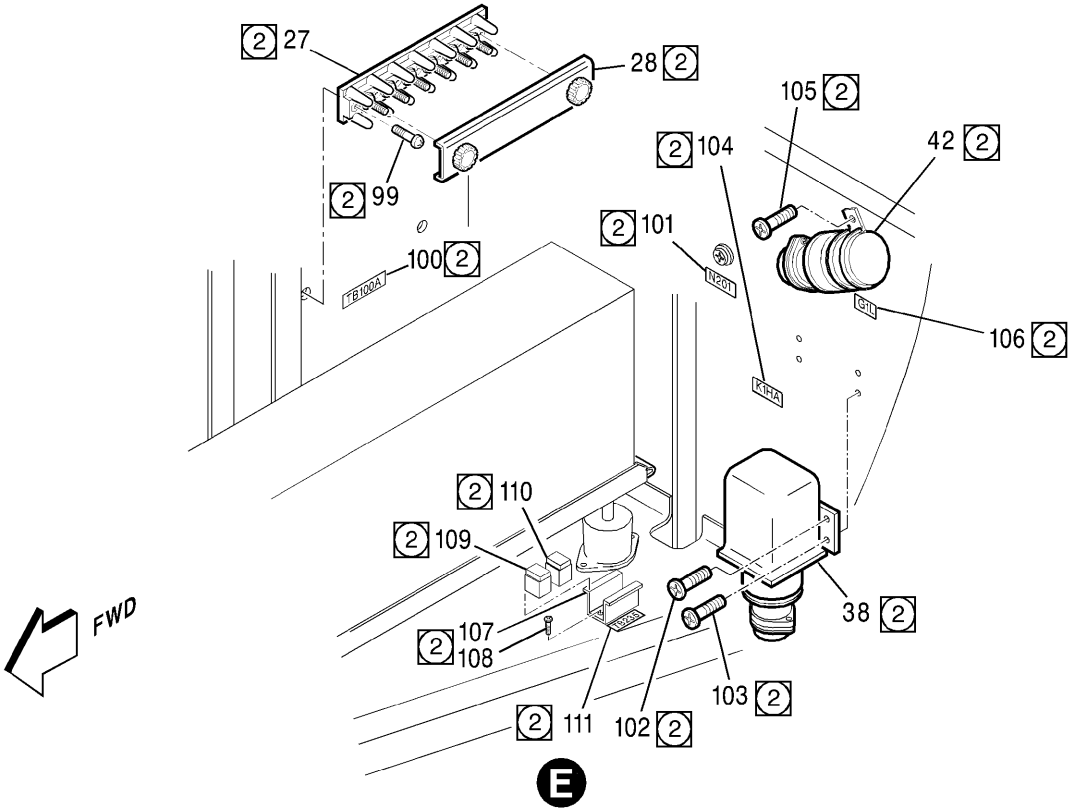

BMY02193

Figure 2-12-6 (Sheet 2 of 3) Main Distribution & Relay Panels

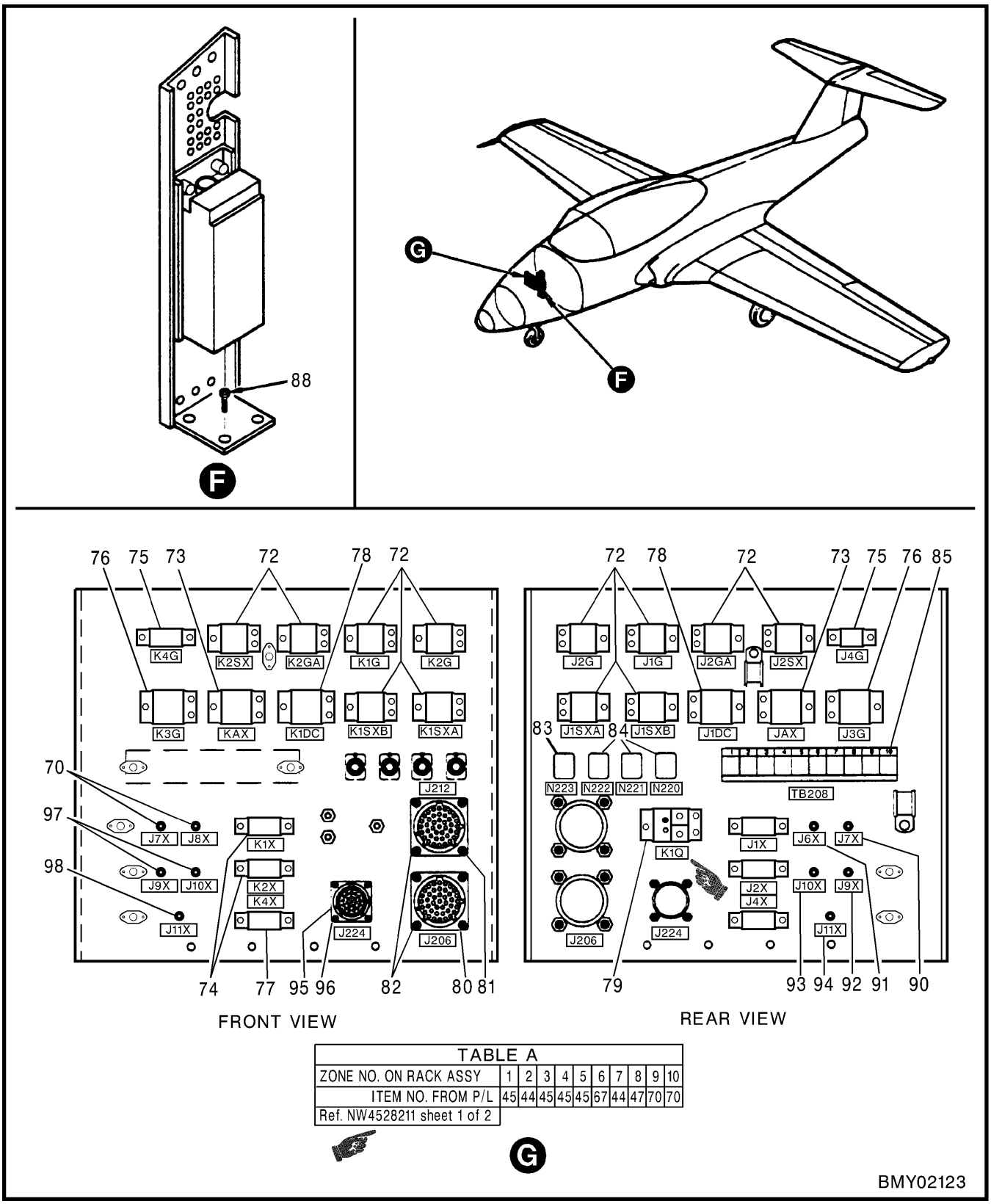

TABLE A										
ZONE NO. ON RACK ASSY	1	2	3	4	5	6	7	8	9	10
ITEM NO. FROM P/L	45	44	45	45	45	67	44	47	70	70
Ref. NW4528211 sheet 1 of 2										

Figure 2-12-6 (Sheet 3 of 3) Main Distribution & Relay Panels

FIGURE AND INDEX NUMBER	GROUP ELECTRICAL EQUIPMENT MAJOR ASSEMBLY MAIN DISTRIBUTION & RELAY PANELS PART NUMBER		1 2 3 4 5 6 7 NOMENCLATURE	EFFEC-TIVITY	UNITS PER ASSY
2-12-6 -37	MS35207-263		.SCREW		2
	AN960D10L		.WASHER		6
-38	25830071		.RELAY - (V80234) (K1HA)		1
-39	AN500A8-8		.SCREW		1
-40	MS35206-246		.SCREW		1
-41	MS35206-245		.SCREW		2
	AN960PD8L		.WASHER		4
-42	577-100	*	.FLASHER - NAV LIGHT (V96182) (G1L)		1
-43	NO NUMBER	*	.BRACKET		2
-44	AN501A10-8		.SCREW		1
-45	MS35207-263		.SCREW		3
	AN960D10L		.WASHER		4
-46	NAS1203-4	*	.SCREW		4
	AN960C10	*	.WASHER		4
	MS35338-43	*	.LOCK WASHER		4
	FN1014-1032	*	.NUT - (V56878)		4
-47	MS35207-265		.SCREW - (N86 GROUND STUD)		1
	MS35335-32		.LOCK WASHER		1
	AN960-10L		.WASHER		2
	MS35338-43		.LOCK WASHER		2
	MS35650-302		.NUT		1
-48	K41A-59005-6		.DECAL - (N86)		1
	41A-42169		PANEL INSTL - NOSE CIRCUIT BREAKER (IAW C-12-114-000/CF-337 & 354) (SEE FIG. 2-12-3)		NP
	41A-42169-810		.PANEL ASSY - NOSE CIRCUIT BREAKER		1
-49	41A-42169-38		..PANEL - CIRCUIT BREAKER		1
-50	41A-42169	**	..SHIELD		1
-51	MS35206-227	**	..SCREW		2
	AN960D6L	**	..WASHER		2
	MS21042L06	**	..NUT		2
-52	AN3249-1		..JACK - (J3P)		1
-53	AN3249-2		..JACK - (J2P)		1
-54	NW4528240-1		..BUSBAR		2
-55	NW4528245-1		..BUSBAR		1
-56	MS35207-262		.SCREW		4
	AN960D10L		.WASHER		4
	NW4528219-1		CIRCUIT BREAKER INSTL - NOSE (SEE FIG. 2-12-2)		NP
-57	NW4528152-1		.BUSBAR		4
-58	NW4528152-4		.BUSBAR		1
-59	MS25244-5		.CIRCUIT BREAKER - (5A)		7
-60	MS25244-15		.CIRCUIT BREAKER - (15A)		1
-61	MS25244-25		.CIRCUIT BREAKER - (25A)		3
-62	MS25244-50		.CIRCUIT BREAKER - (50A)		3
-63	MS25244-7		..CIRCUIT BREAKER		1
-64	NW4528246-2		LABEL		1
-65	NW4528246-1		LABEL		1
-66	NW4528241-1		..BUSBAR		1
-67	NW4528242-1		..BUSBAR		1
-68	NW4528243-1		..BUSBAR		1
-69	NW4528244-1		..BUSBAR		1
-70	105-0202-200		..TEST JACK (J7X & J8X)		2
	NW4528230-1		EQUIPMENT INSTL - AVIONICS BAY (FS 110 TO FS 149) (SEE FIG. 2-12-2)	A	REF
	NW4528230-2		.EQUIPMENT INSTL - AVIONICS BAY (FS 110 TO FS 149) (SEE FIG. 2-12-2)	B	REF
	NW4528211-1		.PANEL ASSY - TB & RELAY (FS 140) (SEE FIG. 2-12-2)		REF
-71	NW4528210-1		..PANEL ASSY		1
		*	IAW C-12-114-000/CF-451		
		**	IAW C-12-114-000/CF-458		
		A	FOR AIRCRAFT CT114102		
		B	FOR FLEET		

FIGURE AND INDEX NUMBER	GROUP ELECTRICAL EQUIPMENT MAJOR ASSEMBLY MAIN DISTRIBUTION & RELAY PANELS PART NUMBER	1 2 3 4 5 6 7 NOMENCLATURE	EFFEC-TIVITY	UNITS PER ASSY
2-12-6 -72	M83536/6-022M	..RELAY - (V35344) (K1G, K1SXA, K1SXB, K2G, K2GA, K2SX)		6
	M12883/44-01	..SOCKET - (V35344) (J1G, J1SXA, J1SXB, J2G, J2GA, & J2SX)		6
	41A-90904-190	..LABEL - (K1SXB)		1
	41A-90904-14	..LABEL - (K2G)		1
	41A-90904-52	..LABEL - (K2GA)		1
	41A-90904-2	..LABEL - (K2K)		1
	41A-90904-50	..LABEL - (K2SX)		1
	41A-90904-30	..LABEL - (J1G)		1
	41A-90904-302	..LABEL - (J1SXA)		1
	41A-90904-304	..LABEL - (J1SXB)		1
	41A-90904-26	..LABEL - (J2G)		1
	41A-90904-54	..LABEL - (J2GA)		1
	41A-90904-38	..LABEL - (J2K)		1
	41A-90904-56	..LABEL - (J2SX)		1
-73	MS27400-17	..RELAY - (K6X)		1
	M12883/40-13	..SOCKET - (V35344) (J6X)		1
	41A-90904-16	..LABEL - (K6X)		1
	41A-90904-28	..LABEL - (J6X)		1
-74	MS27401-36	..RELAY - (K1X &K2X)		2
	M12883/41-12	..SOCKET - (V35344) (J1X & J2X)		2
	41A-90904-20	..LABEL - (K1X)		1
	41A-90904-18	..LABEL - (K2X)		1
	41A-90904-44	..LABEL - (J1X)		1
	41A-90904-42	..LABEL - (J2X)		1
R -75	M83536/2-024	..RELAY - (V35344) (K4G)		1
	M12883/45-01	..SOCKET - (V35344) (J4G)		1
	41A-90904-62	..LABEL - (K4G)		1
	41A-90904-66	..LABEL - (J4G)		1
-76	M6106/51-005	..RELAY - (V35344) (K3G)		1
	M12883/40-18	..SOCKET - (V35344) (J3G)		1
	41A-90904-4	..LABEL - (K3G)		1
	41A-90904-40	..LABEL - (J3G)		1
-77	TDH-6050-3001	..RELAY - (35344) (K4X)		1
	S01055-8690	..SOCKET - (V35344) (J4X)		1
	41A-90904-60	..LABEL - (K4X)		1
	41A-90904-68	..LABEL - (J4X)		1
-78	TDH8050-1602P	..RELAY - (V35344) (K1DC)		1
	S0-1048-8308	..SOCKET - (V35344) (J1DC)		1
	41A-90904-64	..LABEL - (K1DC)		1
	41A-90904-70	..LABEL - (J1DC)		1
-79	M520-U5N-L	..RELAY - (K1Q)		1
	MS35206-227	..SCREW		3
	NAS1149DN632K	..WASHER		3
	MS21042L06	..NUT - (SELF-LOCKING)		3
-80	MS3470L24-61P	..CONNECTOR - (J205)		1
-81	MS3470L24-31P	..CONNECTOR - (J212)		1
	M85049/31-24N	..BACKSHELL - (V35344)		2
-82	MS35206-228	..SCREW		8
	AN960-6L	..WASHER		8
	MS21042-06	..NUT - SELF LOCKING		8
	41A-90904-80	..LABEL - (J205)		1
	41A-90904-296	..LABEL - (J212)		1
-83	M81714/63-16S	..MODULE - GROUND (N223)		1
	MS27488-16	..PLUG - END SEAL		AR
-84	M81714/63-20S	..MODULE - GROUND (N220, N221 & N222)		3
	MS27488-20	..PLUG - END SEAL		AR

FIGURE AND INDEX NUMBER	GROUP ELECTRICAL EQUIPMENT MAJOR ASSEMBLY MAIN DISTRIBUTION & RELAY PANELS PART NUMBER		1 2 3 4 5 6 7 NOMENCLATURE	EFFEC-TIVITY	UNITS PER ASSY
2-12-6	41A-90904-216		..LABEL - (N220)		1
	41A-90904-218		..LABEL - (N221)		1
	41A-90904-220		..LABEL - (N222)		1
	41A-90904-222		..LABEL - (N223)		1
- 85	M81714/60-16-01		..TERMINAL BLOCK		1
	M81714/60-16-02		..TERMINAL BLOCK		2
	M81714/60-20-01		..TERMINAL BLOCK		1
	M81714/60-20-03		..TERMINAL BLOCK		1
	M81714/60-20-04		..TERMINAL BLOCK		1
	SJT510504		..RACK ASSY - (V58982) (TB206)		1
	MS27488-16		..PLUG - END SEAL		AR
	MS27488-20		..PLUG - END SEAL		AR
	41A-90904-58		..LABEL - (TB206)		1
	MS35207-263		..SCREW		2
	41A-90903-1		.ANGLE ASSY		1
- 86	NW4528092-1		.ANGLE		1
- 87	MS35207-262		.SCREW		8
	NAS1149D0332K		.WASHER		8
- 88	MS35207-263		.SCREW		1
	NW4515200-1		COMMON INSTL - GENL ASSY (SEE SECTIONS 1 & 13)		NP
	NW4515004-1		.NAV LIGHT FLASHER MOD		REF
	NW4515003-1		..CONNECTOR - SHORTING		1
- 89	MS3102R16-8P		...CONNECTOR		1
- 90	NW4528193-9		..LABEL - (J7X)		2
- 91	NW4528193-10		..LABEL - (J8X)		2
- 92	NW4528193-11		..LABEL - (J9X)		2
- 93	NW4528193-12		..LABEL - (J10X)		2
- 94	NW4528193-13		..LABEL - (J11X)		2
- 95	MS3470L14-4P		..CONNECTOR - (J224)		1
- 96	MS35206-215		..SCREW		4
	NAS1149DN416K		..WASHER		4
	MS21042L04		..NUT - (SELF-LOCKING)		4
- 97	105-0206-200		..TEST JACK - (J9X & J10X)		2
- 98	105-0203-200		..TEST JACK - (J11X)		1
	4601105-1	*	RECEIVER INSTL - ADF (SEE SECTION 13)		REF
- 99	MS35206-214	*	.SCREW (ATTACHING TB100A)		2
	NAS1149FN416P	*	.WASHER (ATTACHING TB100A)		2
	MS21042L04	*	.NUT (ATTACHING TB100A)		2
-100	4601147-8	*	.LABEL (TB100A)		1
-101	4601147-1	*	.LABEL (N201)		1
-102	MS35206-243	*	.SCREW (ATTACHING K1HA)		3
-103	MS35265-43	*	.SCREW (ATTACHING K1HA)		1
	NAS1149FN832P	*	.WASHER (ATTACHING K1HA)		4
	MS21042L08	*	.NUT (ATTACHING K1HA)		4
-104	4601147-7	*	.LABEL (K1HA)		1
-105	MS35206-243	*	.SCREW (ATTACHING G1L)		1
	NAS1149FN832P	*	.WASHER (ATTACHING G1L)		1
	MS21042L08	*	.NUT (ATTACHING G1L)		1
-106	4601147-9	*	.LABEL (G1L)		1
-107	M81714/60-22-01	*	.TRACK - MODULE (TB235)		1
-108	MS35206-245	*	.SCREW		2
	NAS1149FN832P	*	.WASHER		2
-109	M81714/60-22-01	*	.MODULE		1
-110	M81714/60-25-05	*	.MODULE		1
-111	4601147-1	*	.LABEL (TB235)		1
-112	MS22073-3	**	CIRCUIT BREAKER		1
-113	MS22073-1	**	CIRCUIT BREAKER		1
-114	NW4528152-1	**	BUS BAR		1
-115	NW4529017-1	**	LABEL		1
-116	NW4529017-2	**	LABEL		1
			-000-		
		*	IAW C-12-114-000/CD-046		
		**	FOR A/C EQUIPPED WITH LMS		

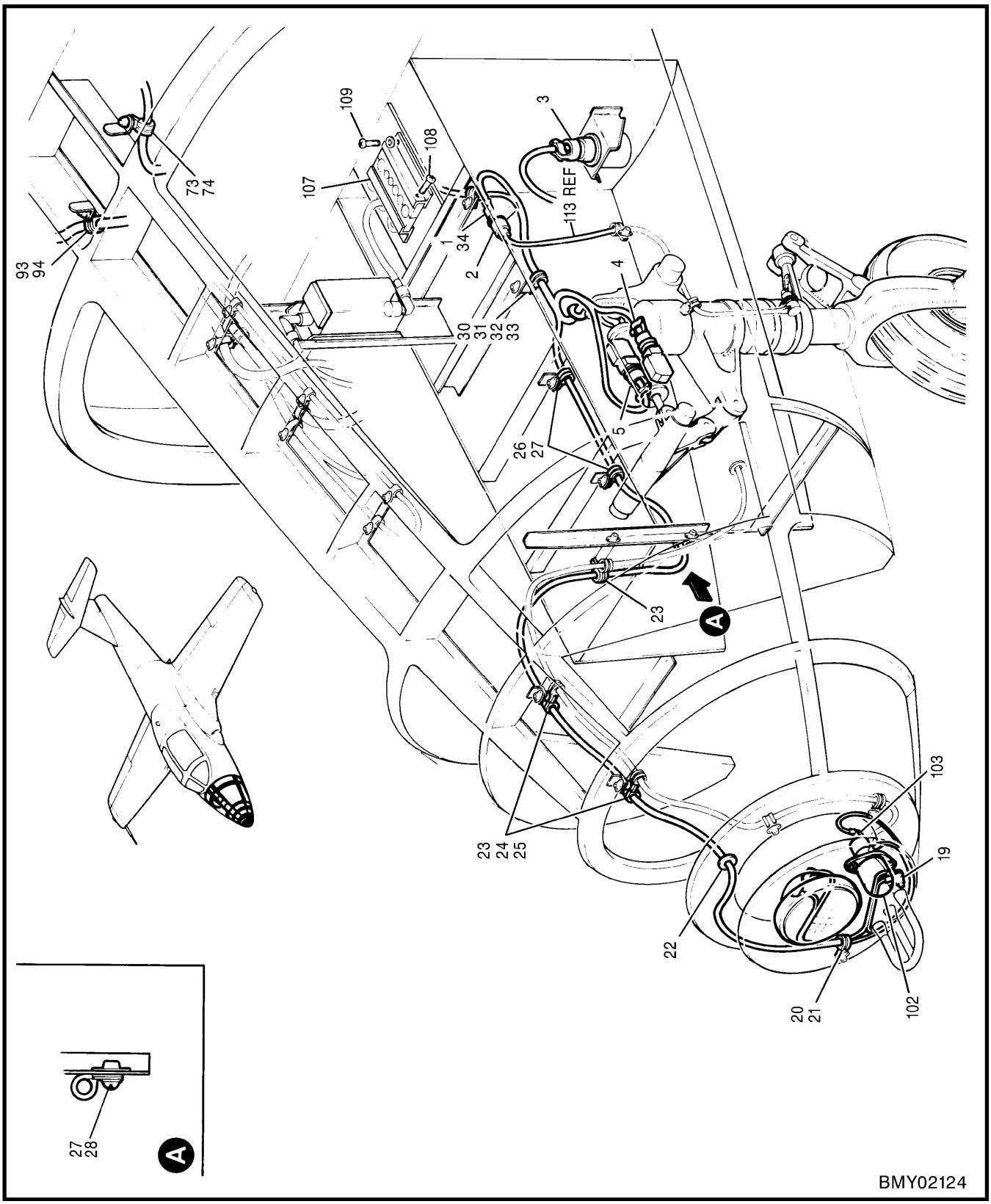

Figure 2-12-7 (Sheet 1 of 3) Nose Compartment Electrical Harnesses

FIGURE AND INDEX NUMBER	GROUP ELECTRICAL EQUIPMENT MAJOR ASSEMBLY NOSE COMPARTMENT ELECTRICAL HARNESSES PART NUMBER	1 2 3 4 5 6 7 NOMENCLATURE	EFFEC-TIVITY	UNITS PER ASSY
2-12-7 -	NW4528200-1	WIRING INSTL - NOSE (MODIFYING 41A-43013) (SEE FIG. 2-12-1)		NP
	NW4528324-1	.HARNESS ASSY - FUSELAGE/NOSE		1
- 1	MS3470L12-10S	..CONNECTOR - (J10G)		1
	M85049/52-S-12N	..BACKSHELL		1
- 2	MS3476L12-10P	..CONNECTOR - (P10G) (SEE SECTION 4)		REF
	M85049/52-S-12N	..BACKSHELL		1
- 3	MS3456L14S-2S	..CONNECTOR - (P2DB)		1
	M85049/52-S-14N	..BACKSHELL		1
- 4	MS3476L10-6S	..CONNECTOR - (P8G)		1
	M85049/52-S-10N	..BACKSHELL		1
- 5	MS3476L10-6SW	..CONNECTOR - (P9G)		1
	M85049/52-S-10N	..BACKSHELL		1
- 6	MS3456L16S-8S	..CONNECTOR - (P2L)		1
	M85049/52-S-16N	..BACKSHELL		1
- 7	MS3456L18-1S	..CONNECTOR - (P10HA)		1
	M85049/52-S-10N	..BACKSHELL		1
- 8	MS3476L20-16P	..CONNECTOR - (P14)		1
	M85049/52-S-20N	..BACKSHELL		1
- 9	MS3476L22-41PW	..CONNECTOR - (P16)		1
	M85049/52-S-22N	..BACKSHELL		1
-10	MS3476L22-41P	..CONNECTOR - (P18)		1
	M85049/52-S-22N	..BACKSHELL		1
-11	MS3476L12-10S	..CONNECTOR - (P1WB)		1
	M85049/52-S-12N	..BACKSHELL		1
	NW4528410-1	.HARNESS ASSY - NOSE (SEE SECTION 13)		1
-12	MS3476L20-16PW	..CONNECTOR - (P10)		1
	M85049/52-S-22N	..BACKSHELL		1
	NW4528034-1	.HARNESS ASSY - NOSE		1
-13	MS3456L24-11S	..CONNECTOR - (P1V & P2V)		2
	M85049/52S24N	..BACKSHELL		2
	NW4528321-1	.HARNESS ASSY		1
-14	MS3456L20-27S	..CONNECTOR - (P2FC)		1
	M85049/52-S-20N	..BACKSHELL		1
-15	MS3476L24-61P	..CONNECTOR - (P22)		1
	M85049/52-S-24N	..BACKSHELL		1
R -16	MS3456L20-29S	..CONNECTOR - (P1FC)		1
	M85049/52-S-20N	..BACKSHELL		1
-17	MS3476L20-39P	..CONNECTOR - (P12)		1
	M85049/52-S-20N	..BACKSHELL		1
-18	MS3476L20-41S	..CONNECTOR - (P3FC)		1
	M85049/52-S-20N	..BACKSHELL		1
-19	MS35207-265	.SCREW - GROUND STUD (N40)		1
	NAS1149D0363H	.WASHER		2
	MS35338-43	.WASHER		1
	NAS1149F0332P	.WASHER		2
	MS35650-302	.NUT		1
	MS21042-3	.NUT		2
-20	MS21919WDG5	.CLAMP		1
-21	MS35206-245	.SCREW		1
	NAS1149FN816P	.WASHER		1
-22	MS35489-37	.GROMMET		1
-23	MS21919WDG3	.CLAMP		3
-24	MS35206-248	.SCREW		2
-25	NAS43DD-3-24	.SPACER		2
	NAS1149FN816P	.WASHER		4
	MS21042-06	.NUT		2

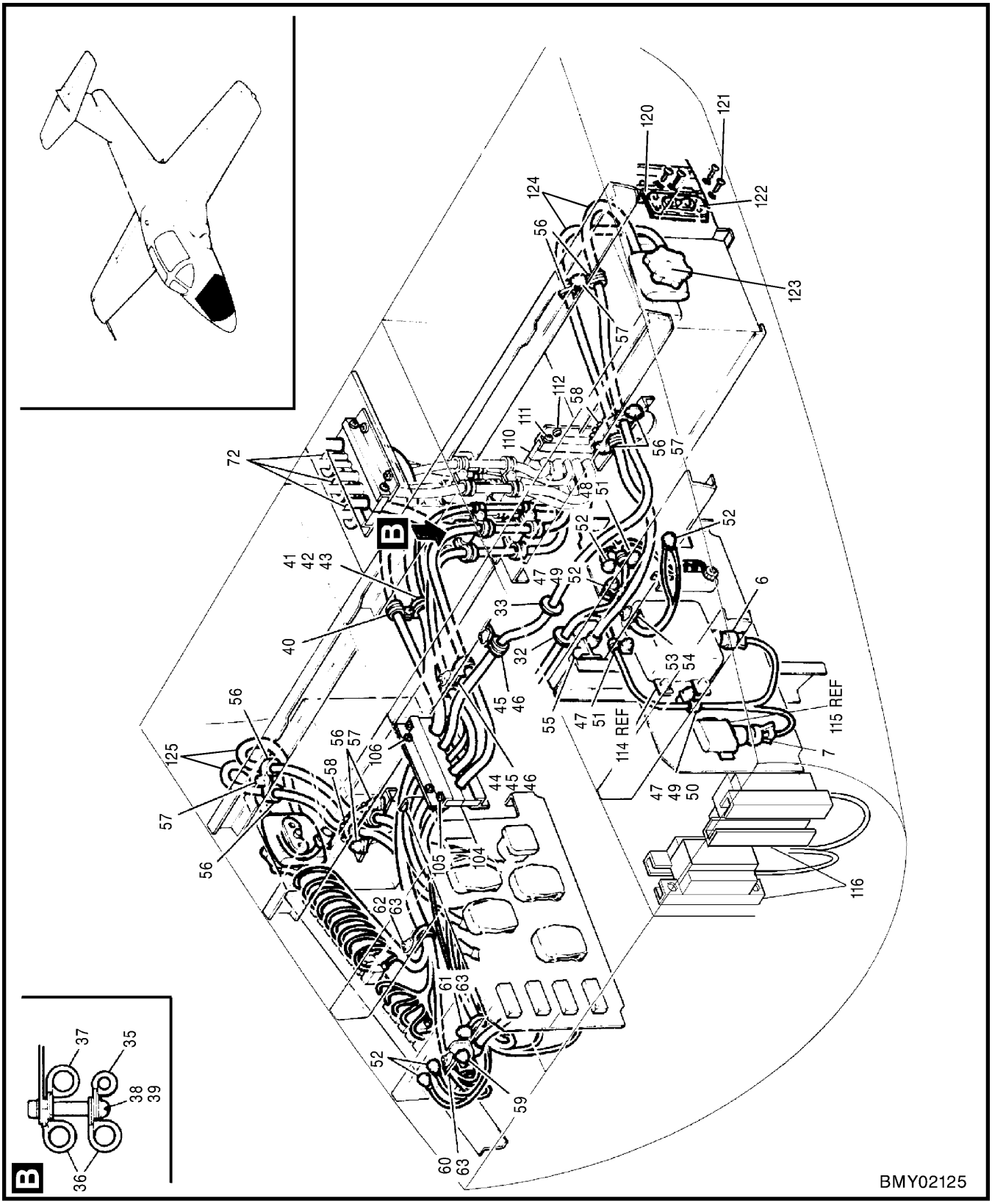

Figure 2-12-7 (Sheet 2 of 3) Nose Compartment Electrical Harnesses

FIGURE AND INDEX NUMBER	GROUP ELECTRICAL EQUIPMENT MAJOR ASSEMBLY NOSE COMPARTMENT ELECTRICAL HARNESSES PART NUMBER	1 2 3 4 5 6 7 NOMENCLATURE	EFFEC-TIVITY	UNITS PER ASSY
2-12-7 -26	MS21919WDG4	.CLAMP		3
-27	MS35206-245	.SCREW		3
	NAS1149FN816P	.WASHER		3
-28	MS21919WDG7	.CLAMP		2
-29	MS35206-230	.SCREW		1
-30	MS35206-248	.SCREW		1
-31	NAS43DD-3-24	.SPACER		1
	NAS1149FN816P	.WASHER		2
-32	MS35489-135	.GROMMET		1
-33	MS35489-20	.GROMMET		1
-34	MS35206-215	.SCREW		4
	NAS1149FN416P	.WASHER		4
	MS21042-04	.NUT		4
-35	MS21919WDG3	.CLAMP		2
-36	MS21919WDG8	.CLAMP		4
-37	MS21919WDG9	.CLAMP		2
-38	MS35206-251	.SCREW		2
-39	NAS43DD-3-48	.SPACER		2
	NAS1149FN816P	.WASHER		2
-40	MS21919WDG9	.CLAMP		1
-41	MS21919WDG10	.CLAMP		1
-42	MS35206-249	.SCREW		1
-43	NAS43DD-3-32	.SPACER		1
	NAS1149FN816P	.WASHER		1
-44	MS21919WDG7	.CLAMP		1
-45	MS21919WDG8	.CLAMP		2
-46	MS35206-246	.SCREW		2
	NAS1149FN816P	.WASHER		2
-47	MS21919WDG3	.CLAMP		3
-48	MS21919WDG5	.CLAMP		1
-49	MS35206-332	.SCREW		2
-50	NAS43DD-3-4D	.SPACER		2
-51	MS35206-245	.SCREW		2
	NAS1149FN816P	.WASHER		4
-52	MS35207-265	.SCREW - GROUND PLUG (N20, N23, N24, N27, N30, N32, N67, N83 & N218)		9
	NAS1149D0363H	.WASHER		18
	MS35338-43	.WASHER		9
	NAS1149F0332P	.WASHER		18
	MS35650-302	.NUT		9
	MS21042-3	.NUT		9
-53	MS21919WDG2	.CLAMP		1
-54	MS35206-245	.SCREW		1
	NAS1149FN816P	.WASHER		1
-55	NAS1106-6	.BOLT - GROUND STUD (N28)		1
	NAS1149D0663H	.WASHER		1
	MS21042-6	.NUT		1
-56	MS21919WDG9	.CLAMP		8
-57	MS35206-245	.SCREW		6
	NAS1149FN816P	.WASHER		10
	MS21042-08	.NUT		4
-58	MS21266-2	.GROMMET		AR
-59	44-5144-2	.STUD - GROUND (N29)		1
	NAS1149D0663H	.WASHER		2
	MS21042-6	.NUT		2
-60	MS21919WDG7	.CLAMP		1
-61	MS21919WDG11	.CLAMP		1
-62	MS21919WDG15	.CLAMP		1

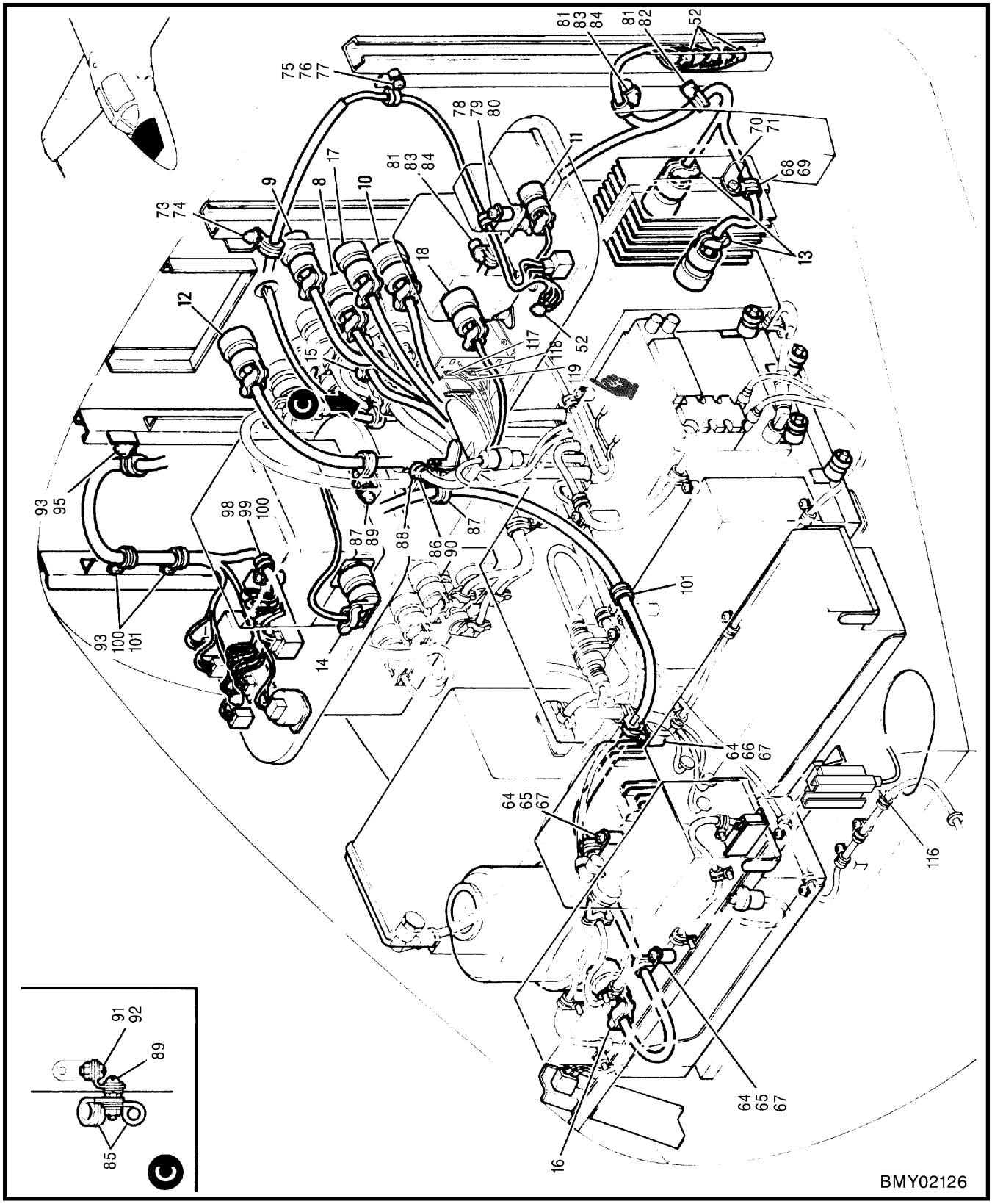

Figure 2-12-7 (Sheet 3 of 3) Nose Compartment Electrical Harnesses

FIGURE AND INDEX NUMBER	GROUP ELECTRICAL EQUIPMENT MAJOR ASSEMBLY NOSE COMPARTMENT ELECTRICAL HARNESSES PART NUMBER	1 2 3 4 5 6 7 NOMENCLATURE	EFFEC-TIVITY	UNITS PER ASSY
2-12-7 - 63	MS35206-245	.SCREW		3
	NAS1149FN816P	.WASHER		4
	MS21042-08	.NUT		2
- 64	MS21919WDG5	.CLAMP		3
- 65	MS35206-250	.SCREW		2
- 66	MS35206-251	.SCREW		1
- 67	NAS43DD-3-48	.SPACER		3
	NAS1149FN816P	.WASHER		3
- 68	MS21919WDG6	.CLAMP		1
- 69	MS35206-245	.SCREW		1
	NAS1149FN816P	.WASHER		2
	MS21042-06	.NUT		1
- 70	AN743-12	.BRACKET		1
- 71	MS35207-263	.SCREW		1
	NAS1149F0332P	.WASHER		1
	MS21042-3	.NUT		1
- 72	MS35489-149	.GROMMET		1
- 73	MS21919WDG8	.CLAMP		2
- 74	MS35206-245	.SCREW		2
	NAS1149FN816P	.WASHER		4
	MS21042-06	.NUT		2
- 75	MS21919WDG6	.CLAMP		1
- 76	MS35206-251	.SCREW		1
- 77	NAS43DD-3-64	.SPACER		1
	NAS1149FN816P	.WASHER		1
	MS21042-08	.NUT		1
- 78	MS21919WDG4	.CLAMP		1
- 79	MS35206-258	.SCREW		1
- 80	NAS43DD-3-48	.SPACER		1
	NAS1149FN816P	.WASHER		1
- 81	MS21919WDG7	.CLAMP		3
- 82	MS35206-245	.SCREW		1
- 83	MS35206-249	.SCREW		2
- 84	NAS43DD-3-32	.SPACER		3
	NAS1149FN816P	.WASHER		3
- 85	MS21919WDG5	.CLAMP		2
- 86	MS21919WDG9	.CLAMP		1
- 87	MS21919WDG11	.CLAMP		2
- 88	MS21919WDG14	.CLAMP		1
- 89	MS35206-249	.SCREW		2
- 90	MS35206-250	.SCREW		1
	NAS1149FN816P	.WASHER		9
	MS35649-282	.NUT		3
	MS21042-08	.NUT		3
- 91	AN743-12	.BRACKET		1
- 92	MS35206-245	.SCREW		1
	NAS1149FN816P	.WASHER		1
	MS21042-08	.NUT		1
- 93	MS21919WDG12	.CLAMP		4
- 94	MS35206-245	.SCREW		1
- 95	MS35206-247	.SCREW		1
- 96	MS35206-332	.SCREW		2
- 97	NAS43DD-3-4D	.SPACER		2
	NAS1149FN816P	.WASHER		8
	MS35338-42	.WASHER		1
	MS35649-282	.NUT		1
	MS21042-08	.NUT		2
- 98	MS21919WDG10	.CLAMP		1
- 99	MS35206-250	.SCREW		1
-100	NAS43DD-3-48	.SPACER		1
	NAS1149FN816P	.WASHER		1
	MS21042-08	.NUT		1

FIGURE AND INDEX NUMBER	GROUP: ELECTRICAL EQUIPMENT MAJOR ASSEMBLY: NOSE COMPARTMENT ELECTRICAL HARNESSES PART NUMBER		1 2 3 4 5 6 7 NOMENCLATURE	EFFEC-TIVITY	UNITS PER ASSY
2-12-7 -101	MS21919WDG10		.CLAMP		1
	41A-43013		HARNESS INSTL - NOSE COMPARTMENT ELECTRICAL (SEE FIG. 2-12-3)		NP
	NW4528324-1		.HARNESS ASSY - (P18 TO NOSE & TROUGH AREA) (MODIFIED BY NW4528200-1)		1
-102	30-1591-1	*	..LIGHT ASSY - (GROUND OBSERVER)		1
	A4174-24C	*	...LAMP		1
	MS23006-3		...COVER		1
	AN3111-2		..RING - (BONDING)		1
	41A-42157		..SPACER		1
	41A-42110-2		..PLATE		1
-103	MS35206-230	*	..SCREW		2
	AN960D6	*	..WASHER		2
	CFT75-36-009	*	..TERMINAL		2
-104	41A-42155		.FAIRLEAD ASSY		1
	41A-42155-2		..CHANNEL - REINFORCING		2
	41A-42155-4		..CUSHION - ADELITE		2
-105	MS35207-270		.SCREW		2
	MS21042L3		.NUT		2
-106	MS35206-245		.SCREW		4
	AN960PD8L		.WASHER		4
-107	CAE9713003-1		.FAIRLEAD ASSY		1
	CAE9713001-1		..ALUMINIUM CHANNEL		2
	CAE9713002-1		..CORK - SILICONE RUBBER BLOCK		1
-108	AN3-23A		.BOLT - MACHINE		2
	MS21042L3		.NUT		2
-109	MS35207-263		.SCREW		4
	AN960PD10L		.WASHER		4
-110	41A-42153-10		.FAIRLEAD ASSY		1
	41A-42153-2		..CHANNEL - REINFORCING		2
	41A-42153-4		..CUSHION - FAIRLEAD (MAY BE PURCHASED FROM (RIL))		1
	41A-42153-12		..CUSHION - FAIRLEAD		1
	41A-42153-12		..CUSHION - FAIRLEAD (MAY BE PURCHASED FROM (RIL))		1
	41A-42153-14		..CUSHION - FAIRLEAD		1
	41A-42153-14		..CUSHION - FAIRLEAD (MAY BE PURCHASED FROM (RIL))		1
-111	MS35207-273		.SCREW		2
	AN960PD10L		.WASHER		2
	MS21042L3		.NUT		2
-112	MS35207-263		.SCREW		4
	AN960PD10L		.WASHER		4
-113	41A-85021-29		HARNESS ASSY - NOSE GEAR SHOCK STRUT (SEE SECTION 4)		REF
-114	577-100		FLASHER - (SEE FIG. 2-12-6) (IAW C-12-114-000/CF-451)		REF
-115	25830071		RELAY - (K1HA) (SEE FIG. 2-12-6)		REF
	NW4528409-1		.WIRE HARNESS ASSY - NOSE		1
-116	M24308/2-1		..CONNECTOR (P220A, P220B & P220C)		3
-117	117RR-A15S		D-SUBMINIATURE CONNECTOR (P217) (SEE FIG. 2-13-3)		REF
-118	117RR-C37S		D-SUBMINIATURE CONNECTOR (P218) (SEE FIG. 2-13-3)		REF
-119	117RR-C37S		D-SUBMINIATURE CONNECTOR (P219) (SEE FIG. 2-13-3)		REF
R -120	NO NUMBER	**	.BRACKET		1
R	MS35207-263	**	..SCREW		3
R	AN960C10	**	..WASHER		3
R	NAS679A3	**	..NUT		3
R -121	AN509-10R10	**	..SCREW		4
R	AN960C10	**	..WASHER		4
R	NAS679A3	**	..NUT		4
R -122	BR8-1	**	.RECEPTACLE, OR		1
R	16163-3	**	.RECEPTACLE		1
R -123	MS25182-2	**	.CONNECTOR, BATTERY DISCONNECT		1
		*	IAW C-12-114-000/CF-422		
R		**	IAW C-12-114-000/CF-293		

	FIGURE AND INDEX NUMBER	GROUP ELECTRICAL EQUIPMENT MAJOR ASSEMBLY NOSE COMPARTMENT ELECTRICAL HARNESSES PART NUMBER	1 2 3 4 5 6 7 NOMENCLATURE	EFFEC-TIVITY	UNITS PER ASSY
R	2-12-7 -124	NW4528406-4	.CABLE ASSY LH		1
R		M22759/34-01-5D	..WIRE ELECTRICAL		AR
R		MS25036-133	..LUG		2
R	-125	NW4528406-5	.CABLE ASSY RH		1
R		M22759/34-01-5D	..WIRE ELECTRICAL		AR
R		MS25036-133	..LUG		2

-000-

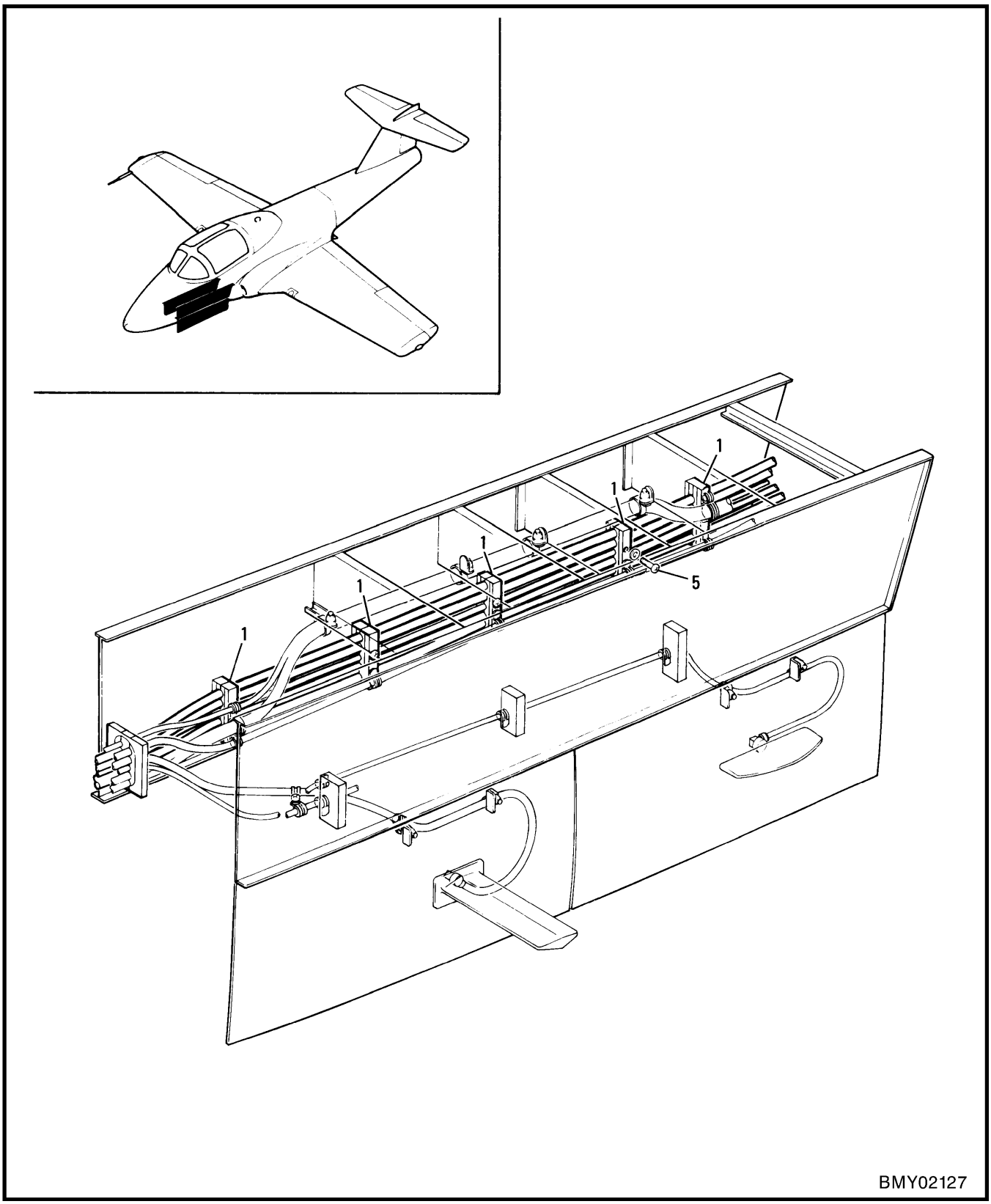

Figure 2-12-8 (Sheet 1 of 3) Fuselage Trough Harnesses & Attachments

FIGURE AND INDEX NUMBER	GROUP ELECTRICAL EQUIPMENT MAJOR ASSEMBLY FUSELAGE TROUGH HARNESSES & ATTACHMENTS PART NUMBER	1 2 3 4 5 6 7 NOMENCLATURE	EFFEC-TIVITY	UNITS PER ASSY
2-12-8 -	41A-43012	TROUGH INSTL - FUSELAGE HARNESS (MODIFIED BY NW4528200-8) (SEE FIG. 2-12-18)		NP
- 1	41A-42159-2	.FAIRLEAD ASSY - ELEC TROUGH (FS 159, 171, 183, 194, 206 & 212)		6
- 2	41A-42159-4	.FAIRLEAD ASSY - ELEC TROUGH (FS 224)		1
- 3	41A-42159-6	.FAIRLEAD ASSY - ELEC TROUGH (FS 232)		1
- 4	41A-42159-8	.FAIRLEAD ASSY - ELECTRICAL TROUGH (FS 242, 248 & 256)		3
- 5	MS35206-333	.SCREW		9
- 6	MS35206-251	.SCREW		1
	AN960PD8L	.WASHER		10
- 7	41A-90790	PLATE - POWER CONTROL MOUNTING (SEE SECTION 7)		REF
	NW4528200-1	WIRING INSTL - NOSE (SEE FIG. 2-12-1 & SECTION 13)		REF
	NW4528324-1	.HARNESS ASSY - FUSELAGE/NOSE (SEE FIG. 2-12-7 & SECTION 13)		REF
- 8	MS3476L14-5S	..CONNECTOR - (P3HB)		1
	M85049/52-S-14N	..BACKSHELL		1
- 9	MS3456L10SL-3S	..CONNECTOR - (P5HA & P7HA)		2
	M85049/52-S-10N	..BACKSHELL		2
-10	MS3476L12-3S	CONNECTOR - (P1Q)		1
	M85049/52-S-12N	..BACKSHELL		1
-11	MS3456L10SL-3S	..CONNECTOR - (P10L)		1
	M85049/52-S-10N	..BACKSHELL		1
-12	MS3451/L18-1S	..CONNECTOR - (J2AA & J3AA)		2
	M85049/52-S-18N	..BACKSHELL		1
-13	MS3456L10SL-3S	..CONNECTOR - (P1EF, P2EF & P3EF)		3
	M85049/52-S-10N	..BACKSHELL		3
-14	MS3476L12-3S	..CONNECTOR - (P2Q)		1
	M85049/52-S-12N	..BACKSHELL		1
-15	MS3456L10SL-3S	..CONNECTOR - (P1EE)		1
	M85049/52-S-10N	..BACKSHELL		1
-16	MS3459KT20-27S	..CONNECTOR - (P60)		1
	M85049/52-S-20N	..BACKSHELL		1
	NW4528400-1	HARNESS ASSY - LH WING (SEE FIG. 2-12-20)		REF
-17	20P230-4	.CONNECTOR - (V24931) (P8DC)		1
-18	33-6810-1	.CONNECTOR - (V03554) (P10DC)		1
	NW4528200-8	WIRING INSTL - LOWER FUSELAGE (SEE FIG. 2-12-1)		NP
-19	MW21919WDG13	.CLAMP		3
-20	MS21919WDG3	.CLAMP		1
-21	MS35206-250	.SCREW		3
-22	NAS43DD-3-48	.SPACER		1
-23	NAS43DD-3-40	.SPACER		1
	NAS1149FN816P	.WASHER		6
	MS21042-08	.NUT		3
-24	MS21919WDG3	.CLAMP		1
-25	MS21919WDG4	.CLAMP		1
-26	MS21919WDG6	.CLAMP		3
-27	MS35206-245	.SCREW		3
	NAS1149FN816P	.WASHER		6
	MS21042-08	.NUT		3
-28	MS35207-265	.SCREW - GROUND STUD (N15, N16, N18 & N63)		4
	NAS1149D0363H	.WASHER		8
	MS35338-43	.WASHER		4
	NAS1149F0332P	.WASHER		8
	MS35650-302	.NUT		4
	MS21042-3	.NUT		4
-29	MS21919WDG5	.CLAMP		1
-30	MS21919WDG6	.CLAMP		2

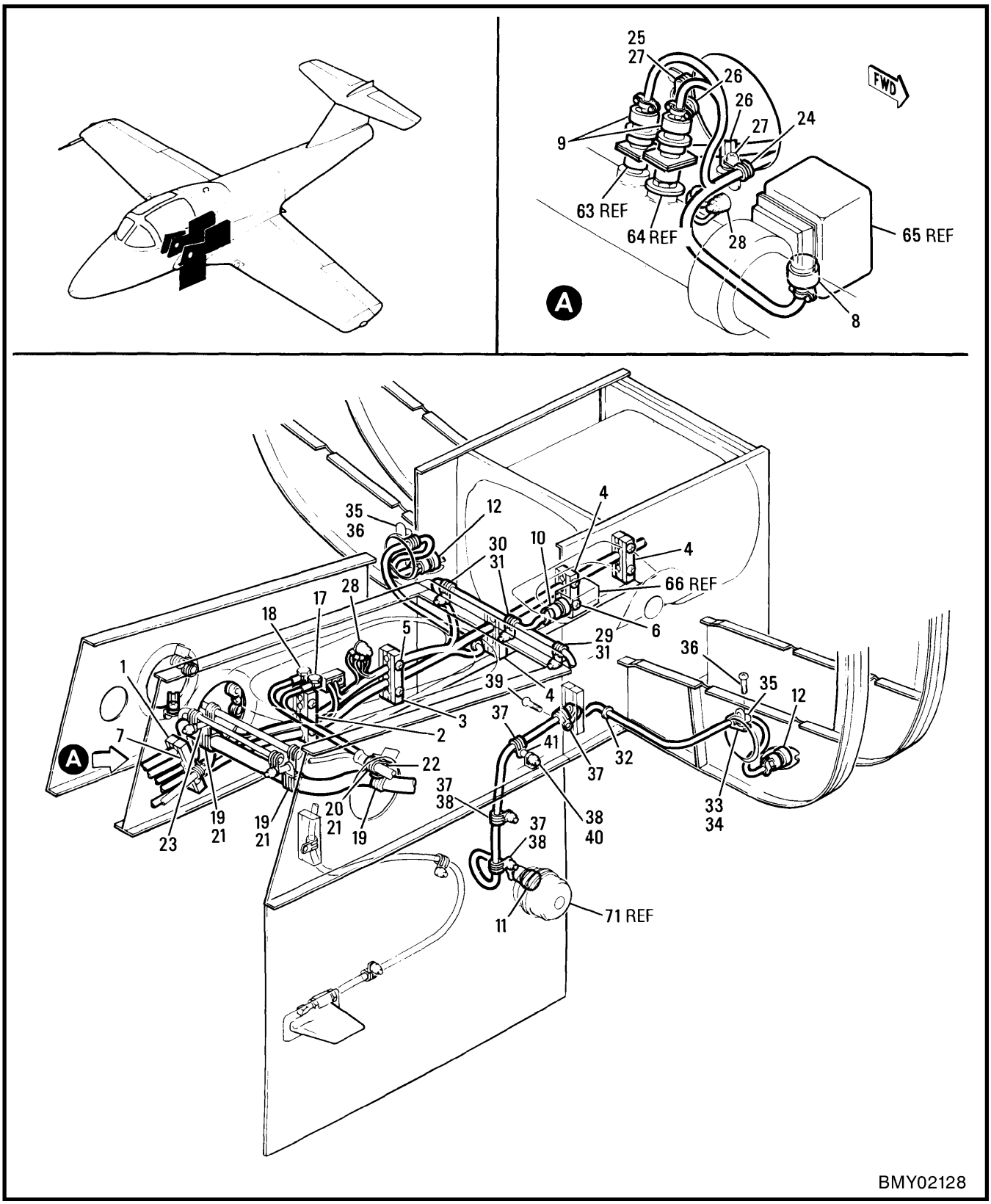

Figure 2-12-8 (Sheet 2 of 3) Fuselage Trough Harnesses & Attachments

FIGURE AND INDEX NUMBER	GROUP ELECTRICAL EQUIPMENT MAJOR ASSEMBLY FUSELAGE TROUGH HARNESSES & ATTACHMENTS PART NUMBER	1 2 3 4 5 6 7 NOMENCLATURE	EFFEC-TIVITY	UNITS PER ASSY
2-12-8 -31	MS35206-245	.SCREW		3
	NAS1149FN816P	.WASHER		6
	MS21042-08	.NUT		3
-32	MS35489-140	.GROMMET		2
-33	MS21919WDG4	.CLAMP		2
-34	MS35206-247	.SCREW		2
	NAS1149FN816P	.WASHER		6
	MS35338-42	.WASHER		2
	MS35649-282	.NUT		2
	MS21042-08	.NUT		2
-35	AN743-13	.BRACKET		2
-36	MS35206-245	.SCREW		2
	NAS1149FN816P	.WASHER		4
	MS21042-08	.NUT		2
-37	MS21919WDG3	.CLAMP		4
-38	MS35206-248	.SCREW		3
-39	MS35207-271	.SCREW		1
-40	NAS43DD-3-32	.SPACER		3
-41	NAS43DD-3-40	.SPACER		1
	NAS1149FN816P	.WASHER		6
	NAS1149FN332P	.WASHER		1
	MS21042-08	.NUT		3
-42	MS21919WDG9	.CLAMP		1
-43	MS21919WDG11	.CLAMP		1
-44	MS35206-247	.SCREW		2
	NAS1149FN816P	.WASHER		6
	MS35338-42	.WASHER		2
	MS35649-282	.NUT		2
-45	MS21919WDG6	.CLAMP		2
-46	MS21919WDG9	.CLAMP		6
-47	MS21919WDG11	.CLAMP		2
-48	MS35206-245	.SCREW		7
	NAS1149FN816P	.WASHER		14
	MS21042-08	.NUT		7
-49	MS21919WDG3	.CLAMP		1
-50	MS21919WDG8	.CLAMP		2
-51	MS21919WDG11	.CLAMP		2
-52	MS35206-245	.SCREW		6
	NAS1149FN816P	.WASHER		6
	MS21042-08	.NUT		3
-53	MS21919WDG3	.CLAMP		2
-54	MS35206-245	.SCREW		1
-55	MS35206-247	.SCREW		1
	NAS1149FN816P	.WASHER		5
	MS35338-42	.WASHER		1
	MS35649-282	.NUT		1
	MS21042-08	.NUT		2
-56	MS21919WDG3	.CLAMP		3
-57	MS35206-245	.SCREW		3
	NAS1149FN816P	.WASHER		6
	MS21042-08	.NUT		3
-58	MS21919WDG4	.CLAMP		2
-59	MS35207-264	.SCREW		2
	NAS1149F0332P	.WASHER		2
-60	NW4528412-1	.CABLE ASSY		1
-61	MS3459KT24-12S	..CONNECTOR - (P61)		1
	M85049/52-S-24N	..BACKSHELL		1
-62	MS3476L10-6S	..CONNECTOR		1
	M85049/52-S-10N	..BACKSHELL		1

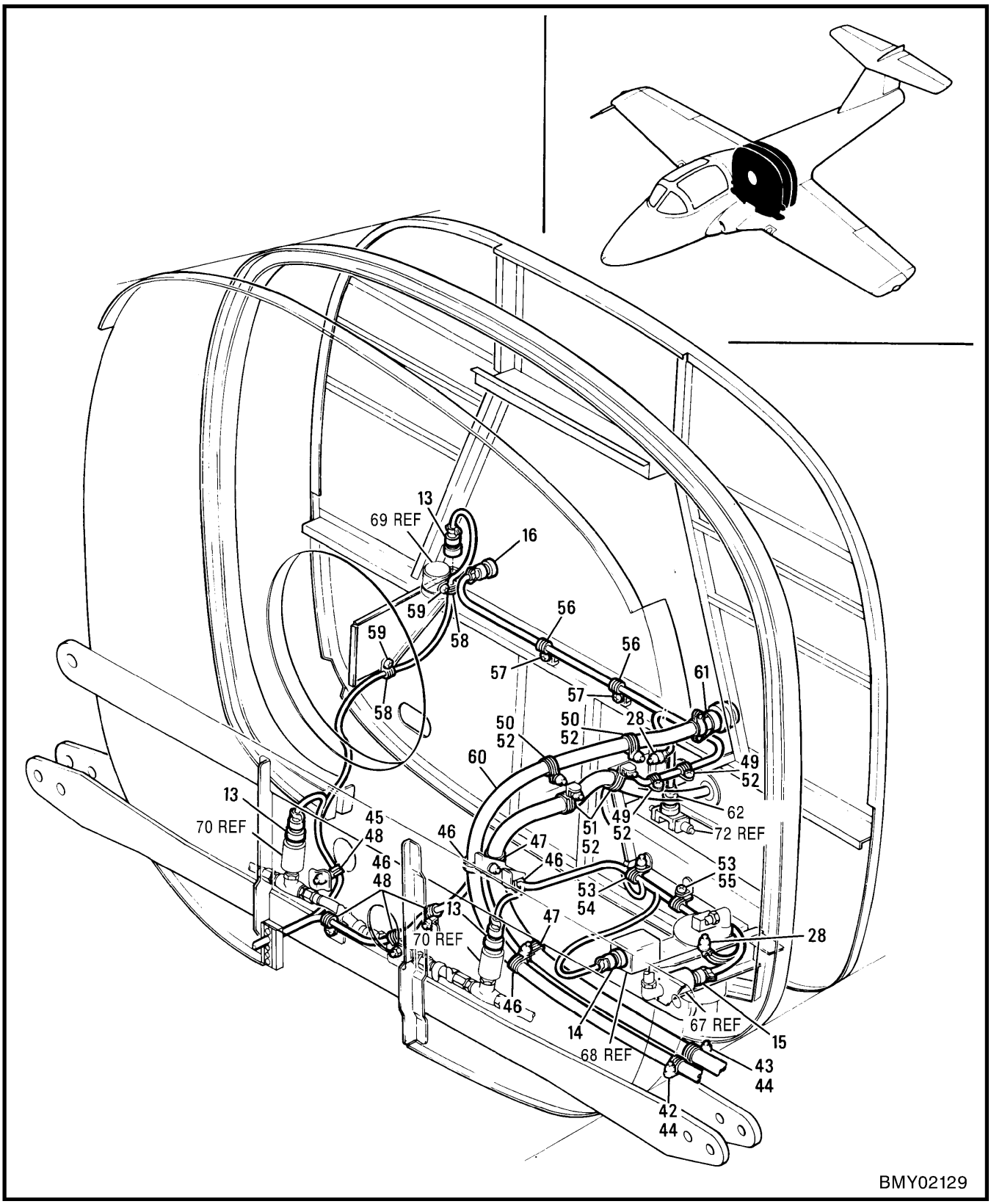

Figure 2-12-8 (Sheet 3 of 3) Fuselage Trough Harnesses & Attachments

FIGURE AND INDEX NUMBER	GROUP ELECTRICAL EQUIPMENT MAJOR ASSEMBLY FUSELAGE TROUGH HARNESSES & ATTACHMENTS PART NUMBER	1 2 3 4 5 6 7 NOMENCLATURE	EFFEC-TIVITY	UNITS PER ASSY
2-12-8 -63	26220068	SENSOR - (OVERHEAT) (S4HA) (SEE SECTION 9)		REF
-64	30050-15	SENSOR - (OUTLINE TEMP) (R2HA) (SEE SECTION 9)		REF
-65	321094-3-1	VALVE ASSY - (BUTTERFLY SHUT OFF) (P3HB) (SEE SECTION 9)		REF
-66	RR12060B	PUMP - (FUEL BOOSTER) (B1Q) (SEE SECTION 6)		REF
-67	SPDG7400	SWITCH ASSY - (S1EE) (FUEL LOW PRESS) (SEE FIG. 2-12-18)		REF
-68	AV16B1692D	VALVE ASSY - FUEL SHUT OFF (B2Q) (SEE SECTION 6)		REF
-69	AV16E1274	VALVE ASSY - AIR SHUT OFF (B1EF) (SEE SECTION 6)		REF
-70	1G349-3	SWITCH - PRESSURE (V09049) (S4EF & S5EF) (SEE SECTION 6)		REF
-71	G8400A8-24	LIGHT ASSY - ANTI COLLISION (V72914) (P10L) (SEE FIG. 2-12-18)		REF
-72	362-0377	VALVE ASSY - (HER) (L3G) (SEE SECTION 8)		REF
		-000-		

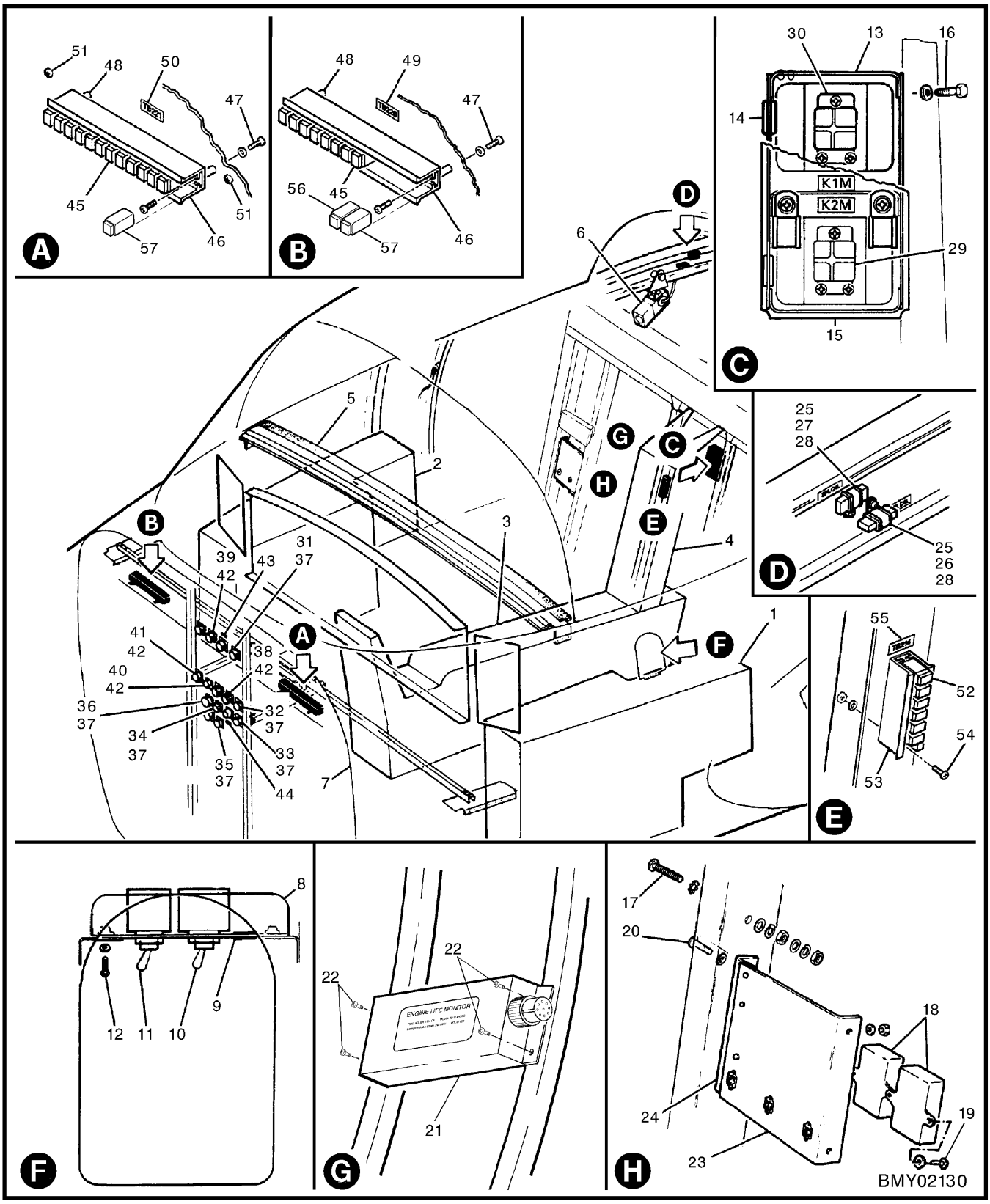

Figure 2-12-9 Cockpit Electrical Equipment

FIGURE AND INDEX NUMBER	GROUP ELECTRICAL EQUIPMENT MAJOR ASSEMBLY COCKPIT ELECTRICAL EQUIPMENT PART NUMBER		1 2 3 4 5 6 7 NOMENCLATURE	EFFEC-TIVITY	UNITS PER ASSY
2-12-9 -	41A-42200		ELECTRICAL EQUIP INSTL - COCKPIT (SEE SECTION 3)		REF
- 1	41A-52023		.ELECTRICAL EQUIP INSTL - PORT CONSOLE (MODIFIED BY NW4528218-1) (SEE FIG. 2-12-11)		REF
- 2	41A-52024		.ELECTRICAL EQUIP INSTL - STBD CONSOLE (MODIFIED BY 41A-90922-1) (SEE FIG. 2-12-12)		REF
- 3	41A-52015		.ELECTRICAL EQUIP INSTL - CENTRE CONSOLE (SEE FIG. 2-12-13)		REF
- 4	41A-42201		.PANEL INSTL - CIRCUIT BREAKER (MODIFIED BY NW4528236-1) (SEE FIG. 2-12-15)		REF
- 5	41A-52011		.SHROUD & LIGHTING EQUIP INSTL - INSTR/PNL (MODIFIED BY NW4528200-3) (SEE FIG. 2-12-16)		REF
- 6	41A-42168		.FLOODLIGHT INSTL - LET DOWN CHART (MODIFIED BY NW4528200-3) (SEE FIG. 2-12-16)		REF
- 7	41A-42203		.ELECTRICAL & ELECTRONIC EQUIP INSTL - FS 149 BULKHEAD (MODIFIED BY NW4528261-1) (SEE FIG. 2-12-10)		REF
	41-52014-802		.SWITCH INSTL - CANOPY EXTERNAL (IAW C-12-114-000/CF-337)		NP
	41A-52012		..SWITCH & BRACKET ASSY		1
- 8	41A-50011-16		...BRACKET		1
- 9	MS35489-6		...GROMMET		1
-10	MS24524-26	*	...SWITCH - (CANOPY EXT SELECTOR)		1
-11	MS24523-30	*	...SWITCH - (CANOPY EXT OPERATING)		1
-12	NAS623-3-2		..SCREW		2
	AN960PD8L		..WASHER		2
	41A-52013		.RELAY INSTL - CANOPY ACTUATOR (MODIFIED BY 41A-90965-1)		NP
	41A-52013-2		..RELAY BOX ASSY		1
-13	41A-50011-14		...RELAY BOX		1
-14	MS35489-9		...GROMMET		2
-15	41A-50011-4		...COVER		1
-16	NAS1103-2		..BOLT		3
	AN960PD10L		..WASHER		3
-17	MS35207-265		.SCREW - (GROUND STUD N41 & N76)		2
	MS35335-32		.LOCK WASHER		2
	AN960-10L		.WASHER		4
	MS35338-43		.LOCK WASHER		4
	MS35650-302		.NUT		4
-18	CP53B1EF205K1		..CAPACITOR		2
-19	MS35207-264		.SCREW		3
	AN960PD10L		.WASHER		3
-20	MS35206-245		.SCREW		4
	AN960PD8L		.WASHER		4
-21	501-1361-03	**	.ENGINE LIFE MONITOR		1
-22	MS27039-1-07	**	..SCREW		4
	41A-35037-2		WEB ASSY - AFT PRESSURE BULKHEAD LOWER (SEE SECTION 3)		REF
-23	41A-35037-202		.BRACKET - MOUNTING (TB53)		1
-24	41A-35037-200		.ANGLE - TB MOUNTING SUPPORT		1
		*	IAW C-12-114-000/CF-383		
		**	IAW C-12-114-000/CF-469		

FIGURE AND INDEX NUMBER	GROUP ELECTRICAL EQUIPMENT MAJOR ASSEMBLY COCKPIT ELECTRICAL EQUIPMENT PART NUMBER	1 2 3 4 5 6 7 NOMENCLATURE	EFFEC-TIVITY	UNITS PER ASSY
2-12-9	41A-90971-1	EQUIPMENT INSTL - CANOPY (SEE FIG. 2-12-2)		NP
-25	M81714/65-20-1	.TERMINAL BLOCK - (SPLC5L)		1
	M81714/65-20-2	.TERMINAL BLOCK - (SPLC4L)		1
	MS27488-20	.PLUG - END SEAL		1
-26	NAS1715D4S	.CLAMP		1
-27	NAS1714D24S	.CLAMP		1
-28	MS35207-262	.SCREW		2
	AN960KD10L	.WASHER		2
	MS21042L3	.NUT		2
	41A-90904-316	.LABEL - (SPLC5L)		1
	41A-90904-314	.LABEL - (SPLC4L)		1
	41A-90965-1	EQUIPMENT INSTL - CANOPY ACTUATOR (SEE FIG. 2-12-9)		NP
-29	M520-U5N-L	.RELAY - (V35344) (K1M & K2M)		2
-30	MS35206-227	.SCREW		6
	AN960KD6	.WASHER		6
	41A-90904-242	.LABEL - (K2M)		1
	41A-90904-244	.LABEL - (K1M)		1
	NW4528230-1	EQUIPMENT INSTL - AVIONICS BAY (SEE FIG. 2-12-2)	A	REF
	NW4528230-2	EQUIPMENT INSTL - AVIONICS BAY (SEE FIG. 2-12-2)	B	REF
-31	SPB22-41PSW	.RECEPTACLE - (V77820) (J16)		1
	10-150949-22	.GASKET - (V77820)		1
	41A-90904-339	.LABEL - (J16)		2
-32	SPB20-39PS	.RECEPTACLE - (J12)		1
	10-150949-20	.GASKET		1
	41A-90904-366	.LABEL - (J12)		2
-33	SPB22-41PS	.RECEPTACLE - (J18)		1
	10-150949-22	.GASKET		1
	41A-90904-3	.LABEL - (J18)		2
-34	SPB24-61PS	.RECEPTACLE - (J22)		1
	10-150949-24	.GASKET		1
	41A-90904-371	.LABEL - (J22)		2
-35	SPB20-41PS	.RECEPTACLE - (J26)		1
	10-150949-20	.GASKET		1
	41A-90904-276	.LABEL - (J26)		2
-36	SPB24-61PSW	.RECEPTACLE - (J24)		1
	10-150949-24	.GASKET		1
	41A-90904-372	.LABEL - (J24)		2
-37	MS35206-230	.SCREW		24
	NAS1149DN616K	.WASHER		24
	MS21042L3	.NUT		24
-38	MS3119E20-16	.RECEPTACLE - (J14)		1
	10-101949-20	.GASKET - (V77820)		1
	41A-90904-367	.LABEL - (J14)		2
-39	SPB20-16PSW	.RECEPTACLE - (V77820) (J10)		1
	10-150949-20	.GASKET - (V77820)		1
	41A-90904-274	.LABEL - (J10)		2
-40	MS3119E12-8	.RECEPTACLE - (J20)		1
	10-101949-12	.GASKET - (V77820)		1
	41A-90904-369	.LABEL - (J20)		2
	A	FOR AIRCRAFT CT114102		
	B	FOR FLEET		

FIGURE AND INDEX NUMBER	GROUP ELECTRICAL EQUIPMENT MAJOR ASSEMBLY COCKPIT ELECTRICAL EQUIPMENT PART NUMBER	1 2 3 4 5 6 7 NOMENCLATURE	EFFEC-TIVITY	UNITS PER ASSY
2-12-9 -41	MS3119E24-61X	.RECEPTACLE - (J28)		1
	10-101949-24	.GASKET - (V77820)		1
	41A-90904-164	.LABEL - (J28)		1
-42	MS35206-217	.SCREW		16
	NAS1149DN432K	.WASHER		16
	MS21042-L04	.NUT		16
-43	41A-90904-479	.LABEL - (E3)		2
-44	41A-90904-480	.LABEL - (E4)		2
	NW4528261-1	EQUIPMENT INSTL - BULKHEAD FS 149 (COCKPIT) (SEE FIG. 2-12-2)		NP
-45	M81714/60-20-01	.TERMINAL BLOCK		3
	M81714/60-20-02	.TERMINAL BLOCK		2
	M81714/60-20-03	.TERMINAL BLOCK		5
	M81714/60-20-04	.TERMINAL BLOCK		4
	M81714/60-22-04	.TERMINAL BLOCK		1
	M81714/60-22-05	.TERMINAL BLOCK		3
	MS27488-20	.PLUG - END SEAL		AR
	MS27488-22	.PLUG - END SEAL		AR
-46	SJT513504	.RACK ASSY - (V58982)		2
-47	MS35207-263	.SCREW		8
	AN960KD10L	.WASHER		4
-48	NAS1831AC6E14	.POST		4
-49	41A-90904-154	.LABEL - (TB220)		1
-50	41A-90904-156	.LABEL - (TB221)		1
-51	MS35206-214	.SCREW		3
	41A-90966-1	EQUIPMENT INSTL - BULKHEAD FS 217-5 (SEE FIG. 2-12-2)		NP
-52	M81714/60-20-06	.TERMINAL BLOCK		1
	M81714/60-16-02	.TERMINAL BLOCK		1
	M81714/60-16-01	.TERMINAL BLOCK		1
	M81714/60-20-04	.TERMINAL BLOCK		1
-53	SJT505504	.RACK ASSY - (V58982)		1
	MS27488-16	.PLUG - END SEAL		AR
	MS27488-20	.PLUG - END SEAL		13
-54	MS35207-263	.SCREW		2
	AN960KD10LL	.WASHER		2
	MS21042L3	.NUT		2
-55	41A-90904-114	.LABEL - (TB214)		1
	4601145-1	WIRING INSTL - ADF (DF-206A) (SEE FIG. 2-13-6)		REF
-56	M81714/60-20-03	.TERMINAL BLOCK (TB220-12)		1
-57	M81714/60-20-04	.TERMINAL BLOCK (TB220-13 & TB221-13)		2
		-000-		

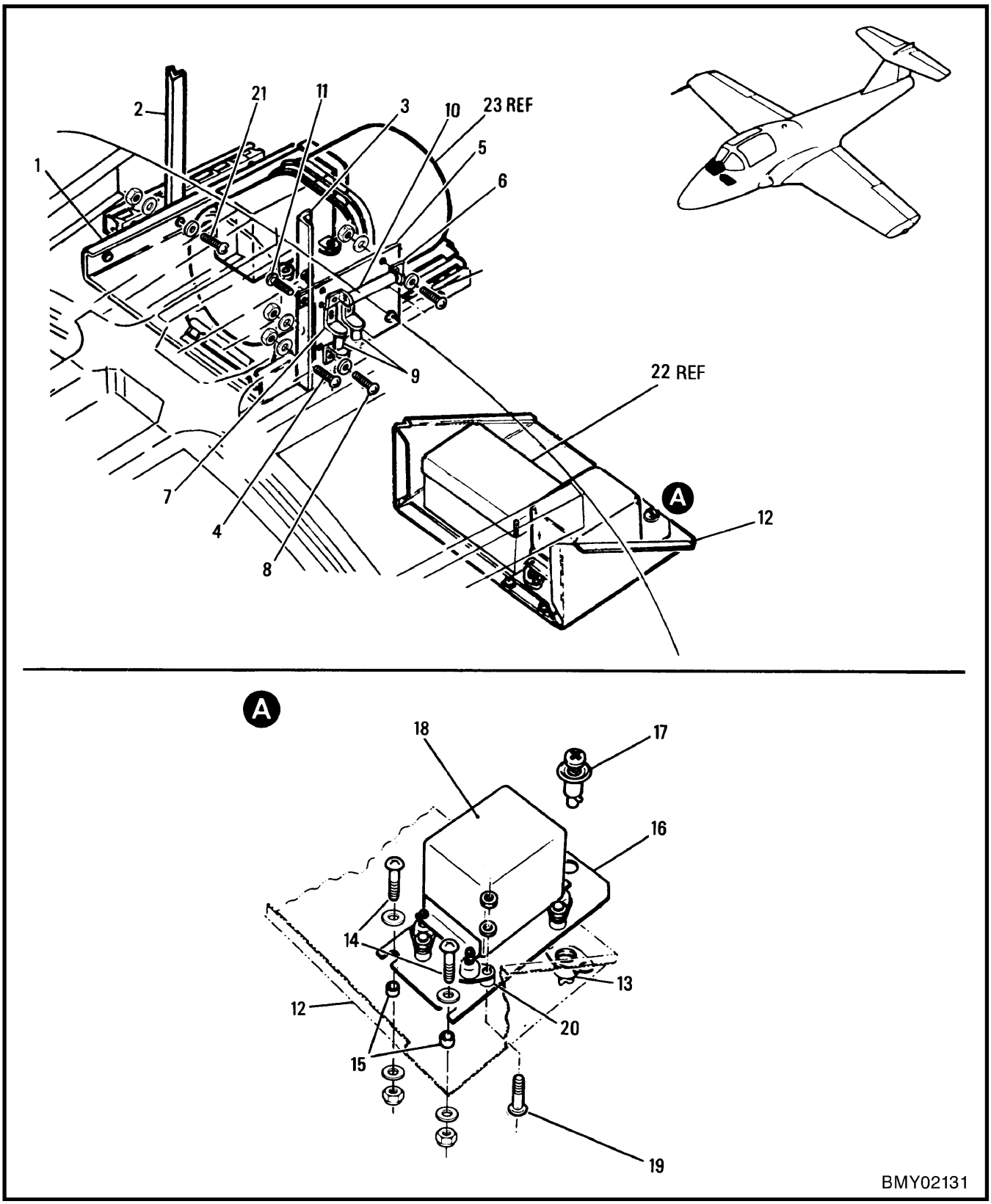

Figure 2-12-10 Forward Cockpit Electrical Equipment

FIGURE AND INDEX NUMBER	GROUP: ELECTRICAL EQUIPMENT MAJOR ASSEMBLY: FORWARD COCKPIT ELECTRICAL EQUIPMENT PART NUMBER		1 2 3 4 5 6 7 NOMENCLATURE	EFFEC-TIVITY	UNITS PER ASSY
2-12-10 -	41A-42203	*	ELECTRICAL & ELECTRONIC EQUIP INSTL - FS 149 BULKHEAD (MODIFIED) (SEE FIG. 2-12-9)		NP
- 1	41A-42205-4		.PLATE - SUPPORT		1
- 2	41A-42205-6		.ANGLE - SUPPORT		1
- 3	41A-42205-8		.ANGLE - SUPPORT		1
- 4	MS35207-262		.SCREW		6
	AN960PD10L		.WASHER		6
	MS21042L3		.NUT		6
	41A-42203-70		.PANEL ASSY - LANDING GEAR WARNING LIGHTS (MODIFIED)		1
- 5	41A-42205-30		..PANEL		1
- 6	MS75009-33		..BRACKET ASSY		1
- 7	MS75009-30		..BRACKET ASSY		2
- 8	MS35206-242		..SCREW		6
	AN960D8L		..WASHER		6
	MS21042L08		..NUT		6
	41A-57155		..HARNESS ASSY - LANDING GEAR WARNING RESISTOR PANEL		1
- 9	RW30G160		...RESISTOR - (V75042) (RIG & R3G)		2
-10	RW33G400		...RESISTOR - (V75042) (R2G)		1
-11	MS35206-242		.SCREW		1
	AN960D8L		.WASHER		1
	MS21042L08		.NUT		1
	41A-42205-28		.BRACKET ASSY - SUPPORT		1
-12	41A-42205-16		..BRACKET - SUPPORT		1
-13	212-12ND		..RECEPTACLE - (V71286)		1
-14	MS35206-245		..SCREW		2
-15	NAS43HT3-4		..SPACER		2
	S1246-11-15-63		..WASHER - (V88308)		4
	MS21042L08		..NUT		2
	41A-42203-62		.CONTROL ASSY - AIR TEMPERATURE		1
-16	41A-42205-18		..PLATE - (AIR TEMPERATURE CONTROL BASE)		1
-17	26S8-3		..STUD - (V71286)		1
-18	45958-10		..CONTROL - (V08179) (AIR TEMPERATURE) (IAW 41A-95105) FOR BRKDN SEE C-17-901-000/MS-000		1
-19	MS24693-52		..SCREW		8
-20	NAS43DD1-20		..SPACER		8
	AN960D6L		..WASHER		8
	MS21042L06		..NUT		8
-21	MS35207-265		.SCREW - (GROUND STUD N14)		1
	MS35335-32		.LOCK WASHER		4
	AN960-10L		.WASHER		8
	MS35338-43		.LOCK WASHER		8
	MS35650-302		.NUT		8
-22	NW4528462-1		BOX ASSY - DISCRETE COMPONENTS (COCKPIT) (SEE SECTION 13)		REF
R -23	124623-10-14		GYRO - VERTICAL (SEE SECTION 14), OR		REF
R	124623-01-10		GYRO - VERTICAL TYPE MD-1 (V35351) (SEE SECTION 14)		REF
			-000-		
		*	IAW C-12-114-000/CF-139		

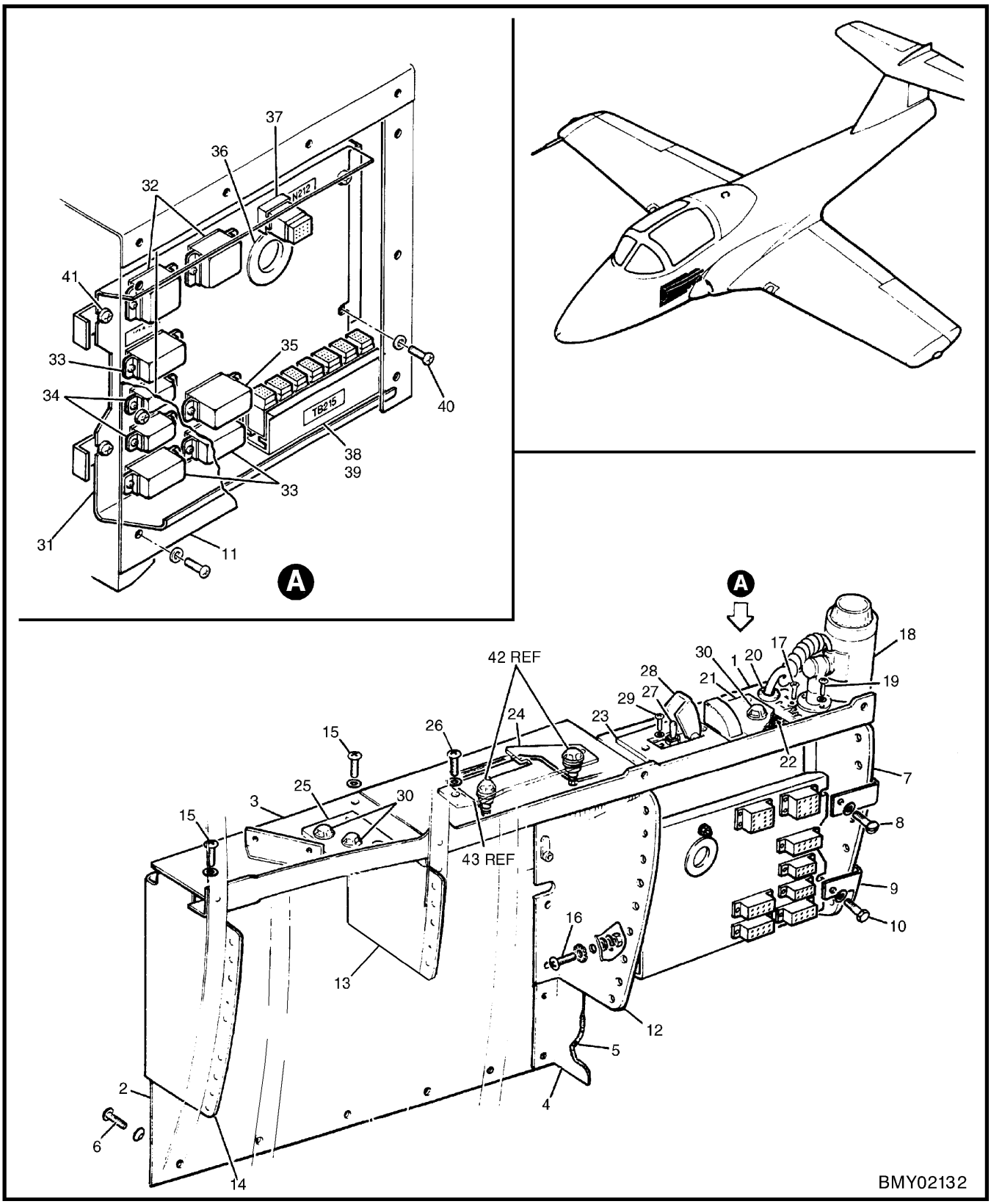

Figure 2-12-11 Port Console Electrical Equipment

FIGURE AND INDEX NUMBER	GROUP ELECTRICAL EQUIPMENT MAJOR ASSEMBLY PORT CONSOLE ELECTRICAL EQUIPMENT PART NUMBER		1 2 3 4 5 6 7 NOMENCLATURE	EFFEC-TIVITY	UNITS PER ASSY
2-12-11 -	41A-52023	*	ELECTRICAL EQUIP INSTL - LH CONSOLE (MODIFIED BY 41A-90913-1) (SEE FIG. 2-12-9)		NP
	41A-42204-804		.CONSOLE STRUCTURE INSTL - LH		NP
- 1	41A-42204-2		..PANEL ASSY - LH CONSOLE (I)		1
- 2	41A-42204-30		..PLATE - FACE (I)		1
- 3	41A-42204-4		..PANEL ASSY - (I)		1
- 4	NO NUMBER		..PANEL - FLOOR BLANKING		1
- 5	NO NUMBER		..CHANNEL - RUBBER		AR
- 6	MS24693-49		..SCREW		16
	A3135-017-24A		..WASHER - (V78533)		16
- 7	41A-42204-6		..WEB ASSY		1
- 8	MS35206-244		..SCREW		3
	AN960D8L		..WASHER		3
	SL100-08		..CLIPNUT - (V97393)		1
- 9	41A-42204-42		..ANGLE		1
-10	AN3-3A		..BOLT		1
	AN960D10L		..WASHER		1
	RM52LHA4972-6-02		..CLIPNUT - (V97393)		1
-11	41A-42204-16		..PLATE - COVER (I)		1
-12	41A-42204-8		..WEB ASSY		1
-13	41A-42204-34		..WEB		1
-14	41A-42204-14		..WEB		1
-15	MS35206-227		..SCREW		28
	AN960D6L		..WASHER		28
	SL201-4AA11		..CLIPNUT - (V97393)		24
	K41A-59023-54		.DECAL - (N87)		1
-16	MS35207-265		.SCREW - (N87 GND STUD)		1
	MS35335-32		.LOCK WASHER		1
	NAS1149F0332P		.WASHER		2
	MS21042-3		.LOCKNUT		1
	NAS1149D0363H		.WASHER		1
	MS35338-43		.LOCK WASHER		2
	MS35650-302		.NUT		2
-17	MS24693-52		.SCREW - (N53 GND STUD)		1
	AN960-6		.WASHER		2
	MS35338-41		.LOCK WASHER		2
	MS35649-262		.NUT		2
-18	MS17245-5		.LIGHT ASSY		1
	MS25231-313		.LAMP		1
-19	MS35206-230		.SCREW		2
	AN960D6L		.WASHER		2
	MS21042L06		.NUT		2
-20	MS35489-6		.GROMMET		1
-21	41-50725		.PANEL - (ELEVATOR TRIM LIGHTING)		1
-22	41A-52023-86		.GASKET - RUBBER		1
-23	41-50726		.PANEL ASSY - (AILERON TRIM LIGHTING)	001-025	1
	41-50726-10		.PANEL ASSY - (AILERON TRIM LIGHTING)	026-	1
	CM8-627		..LAMP		2
-24	41A-50728		.PANEL - (THROT & FLAP CONT LIGHTING)		1
-25	41A-50761		.PANEL - LIGHTING (STALL WARNING)		1
-26	MS35206-230		.SCREW		7
	S1426-6		.WASHER - (V88308)		7
-27	MS25128-1		.SWITCH		2
-28	8916K703		.GUARD - (V15605)		2
-29	MS35206-229		.SCREW		4
	AN960D6L		.WASHER		4
-30	A7165-1		.LIGHT ASSY - (V72914)		3
	MS25237-327		.LAMP		3
	107A		.CONNECTOR - (V04211) (J6L) (ON AILERON TRIM PNL LIGHT)		1
		*	IAW C-12-114-000/CF-033, 368 & NS-084		

FIGURE AND INDEX NUMBER	GROUP ELECTRICAL EQUIPMENT MAJOR ASSEMBLY PORT CONSOLE ELECTRICAL EQUIPMENT PART NUMBER	1 2 3 4 5 6 7 NOMENCLATURE	EFFEC-TIVITY	UNITS PER ASSY
2-12-11	NW4528218-1	EQUIPMENT INSTL - LH CONSOLE (SEE FIG. 2-12-2)		NP
	NW4528217-1	.PANEL ASSY - TB & RELAY		1
-31	NW4528216-1	..PANEL		1
-32	M6106/28-024X	..RELAY - (K1RN & K2RN)		2
	M12883/44-01	..SOCKET		2
	41A-90904-298	..LABEL - (K1RN)		1
	41A-90904-300	..LABEL - (K2RN)		1
R -33	M83536/10-024M	..RELAY - (K1AA, K1C & K2C)		3
	M12883/41-11	..SOCKET		3
R	M39029/92-533	..PIN, ELECTRICAL		8
	41A-90904-110	..LABEL - (K1AA)		1
	41A-90904-96	..LABEL - (K1C)		1
	41A-90904-98	..LABEL - (K2C)		1
R -34	M83536/2-024	..RELAY - (K3C)		1
	M12883/45-01	..SOCKET		1
	41A-90904-100	..LABEL - (K3C)		1
-35	TDH6050-1502	..RELAY - (V35344) (K7HA & K8HA)		2
	S01055-8690	..SOCKET - (V35344)		2
	41A-90904-102	..LABEL - (K7HA)		1
	41A-90904-104	..LABEL - (K8HA)		1
-36	MS35489-20	..GROMMET		1
-37	M81714/63-20S	..MODULE - GROUND (N212)		1
	41A-90904-230	..LABEL - (N212)		1
-38	M81714/60-20-03	..TERMINAL BLOCK		2
	M81714/60-20-04	..TERMINAL BLOCK		3
	M81714/60-20-06	..TERMINAL BLOCK		1
	M81714/60-22-05	..TERMINAL BLOCK		1
	SJT507504	..RACK ASSY - (V58982)		1
	MS27488-20	..PLUG - END SEAL		10
-39	MS35207-263	..SCREW		2
	AN960-10L	..WASHER		2
	41A-90904-94	..LABEL - (TB215)		1
-40	MS35207-244	.SCREW		2
	AN960D8L	.WASHER		2
-41	MS35207-262	.SCREW		2
	AN960D10L	.WASHER		2
-42	A7165-1-327	LIGHT ASSY - (SEE SECTION7)		REF
-43	41A-90752-52	GRIP ASSY - (SEE SECTION 7)		REF

-000-

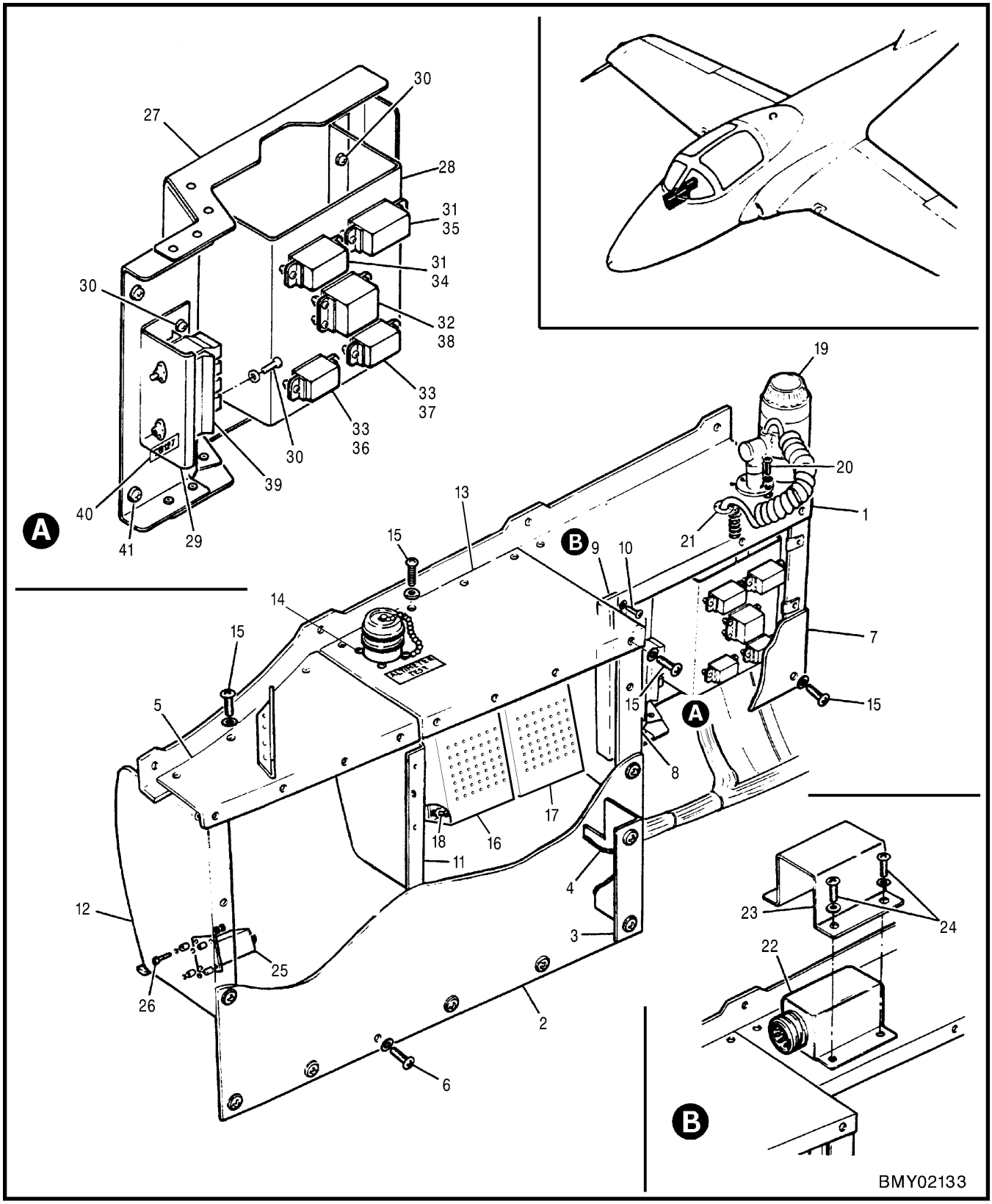

Figure 2-12-12 Starboard Console Electrical Equipment

FIGURE AND INDEX NUMBER	GROUP ELECTRICAL EQUIPMENT MAJOR ASSEMBLY STARBOARD CONSOLE ELECTRICAL EQUIPMENT PART NUMBER	1 2 3 4 5 6 7 NOMENCLATURE Q	EFFEC-TIVITY	UNITS PER ASSY
2-12-12 -	41A-52024 *	ELECTRICAL EQUIP INSTL - RH CONSOLE (MODIFIED BY 41A-90922-1) (SEE FIG. 2-12-9)		NP
	41A-42204-807	.CONSOLE STRUCTURE INSTL - RH		NP
- 1	41A-42204-140	..PANEL ASSY - RH CONSOLE (I)		1
- 2	41A-42204-48	..PLATE - FACE (I)		1
- 3	NO NUMBER	..PANEL - FLOOR BLANKING		1
- 4	NO NUMBER	..CHANNEL - RUBBER		AR
- 5	41A-42204-5	..PANEL ASSY - (I)		1
- 6	AN507-832R7	..SCREW		21
R	A3135-017-24A	..WASHER - (V78553)		21
- 7	41A-42204-17	..PLATE - COVER (I)		1
- 8	41A-42204-10	..WEB ASSY		1
- 9	41A-42204-52	..ANGLE		1
-10	MS35206-244	..SCREW		4
	AN960D8L	..WASHER		4
	SL201-5AA11	..CLIPNUT - (V97393)		4
-11	41A-42204-12	..WEB ASSY		1
-12	41A-42204-15	..WEB		1
-13	41A-42204-58	..PANEL ASSY - SERVOED ALTIMETER TEST (SEE SECTION 14)		REF
-14	MS3120E20-41S	..CONNECTOR		1
-15	MS35206-227	..SCREW		39
	AN960D6L	..WASHER		39
	SL201-4AA11	..CLIPNUT - (V97393)		39
-16	661102B	.POWER CONVERTER - (V07187) (NO.1 PHASE ADAPTER) FOR BRKDN SEE C-16-242-A00/MN-000		1
-17	661102B	.POWER CONVERTER - (V07187) (NO.2 PHASE ADAPTER) FOR BRKDN SEE C-16-242-A00/MN-000		1
-18	MS35207-263	.SCREW		8
	AN960D10L	.WASHER		8
	RM52LHA4972-8-02	.NUT - (V72962)		8
-19	MS17245-5	.LIGHT ASSY		1
	MS25231-313	.LAMP		1
-20	MS35206-230	.SCREW		2
	AN960D6L	.WASHER		2
	NAS679A06W	.NUT		2
-21	MS35489-6	.GROMMET		1
-22	MIL-S-9320	.SIGNAL - (WARNING AUDIBLE) (TYPE MA-1) OR		1
	1541	.SIGNAL - (V96238) OR		
	1543	.SIGNAL - (V96238)		
-23	NO NUMBER	.GUARD - AUDIBLE WARNING SIGNAL UNIT (IAW C-12-114-000/CF-346)		1
-24	MS35206-228	.SCREW		4
	AN960D6L	.WASHER		4
-25	28VS3C2	.RECTIFIER - (V94988) (TRANSFORMER)		1
-26	MS35206-247	.SCREW		4
	NAS43DD3-16	.SPACER		4
	AN960PD8L	.WASHER		4
	MS21042L08	.NUT		4
	41A-90922-1	EQUIPMENT INSTL - RH CONSOLE (SEE FIG. 2-12-2)		NP
	*	IAW C-12-114-000/CF-018, 033, 139, 311, 346, 357 & 368		

FIGURE AND INDEX NUMBER	GROUP ELECTRICAL EQUIPMENT MAJOR ASSEMBLY STARBOARD CONSOLE ELECTRICAL EQUIPMENT PART NUMBER	1 2 3 4 5 6 7 NOMENCLATURE	EFFEC-TIVITY	UNITS PER ASSY
2-12-12	NW4528094-1	.PANEL ASSY - TB & RELAY		1
-27	NW4528093-1	..PANEL		1
-28	NW4528090-1	..BRACKET		1
-29	NW4528091-1	..BRACKET		1
-30	MS35207-263	..SCREW		8
	AN960-10L	..WASHER		8
R -31	M83536/10-024M	..RELAY - (K1FC & K100L)		2
	M12883/41-11	..SOCKET		2
R	M39029/92-533	..PIN, ELECTRICAL		8
-32	TDH8070-2502	..RELAY - (K20J)		1
	S0-1048-8308	..SOCKET		1
R -33	M83536/2-024	..RELAY - (K1HB & K2HB)		2
	M12833/45-01	..SOCKET		2
-34	41A-90904-122	..LABEL - (K100L)		1
-35	41A-90904-124	..LABEL - (K1FC)		1
-36	41A-90904-126	..LABEL - (K1HB)		1
-37	41A-90904-128	..LABEL - (K2HB)		1
-38	41A-90904-130	..LABEL - (K20J)		1
-39	M81714/60-20-03	..TERMINAL BLOCK		1
	M81714/60-20-04	..TERMINAL BLOCK		1
	M81714/60-20-06	..TERMINAL BLOCK		1
	SJT504504	..RACK ASSY		1
	MS27488-20	..PLUG - END SEAL		8
-40	41A-90904-120	..LABEL - (TB217)		1
-41	MS35207-263	.SCREW		4
	AN960KD10L	.WASHER		4
	MS21042-3	.NUT		4
		-000-		

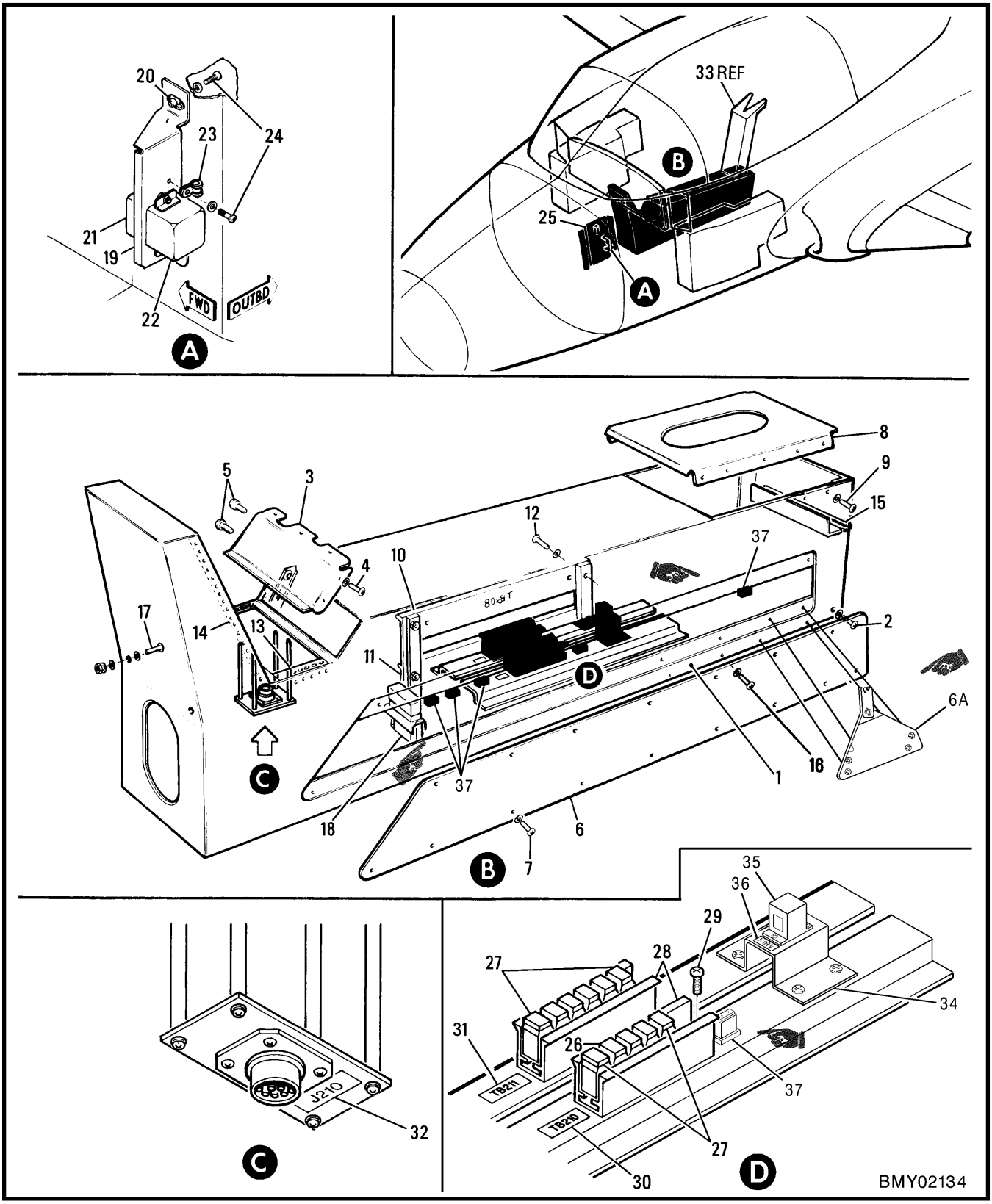

Figure 2-12-13 Centre Console Electrical Equipment

FIGURE AND INDEX NUMBER	GROUP ELECTRICAL EQUIPMENT MAJOR ASSEMBLY CENTRE CONSOLE ELECTRICAL EQUIPMENT PART NUMBER		1 2 3 4 5 6 7 NOMENCLATURE	EFFEC-TIVITY	UNITS PER ASSY
2-12-13 -	41A-52015	*	ELECTRICAL EQUIP INSTL - CTR CONSOLE (MODIFIED BY 41A-90906-1) (SEE FIG. 2-12-9)		NP
	41A-52202		.CONSOLE STRUCTURE INSTL - CENTRE		NP
	41A-52202-800		..CONSOLE STRUCTURE ASSY - CENTRE		1
- 1	41A-52202-6		...SHELF ASSY - CENTRE CONSOLE		1
- 2	MS35206-245		...SCREW		4
	AN960D8L		...WASHER		4
	41A-52202-8		...COVER ASSY		1
- 3	41A-52202-50		....COVER		1
	SX560		....WIRE FORM - (V72794)		3
	AN960D2		....WASHER		6
- 4	MS35206-245		...SCREW		2
	AN960D8L		...WASHER		2
- 5	AN227-10BM6		...STUD		2
- 6	41A-52202-12		...PANEL - ACCESS (I)		2
R -6A	0325433		...BRACKET, MOUNTING, LH SEAT ARAD INSTL (SEE FIG. 2-16-5)		REF
- 7	MS35206-245		...SCREW		34
	AN960D8L		...WASHER		34
- 8	41A-52202-20		...DIAPHRAGM ASSY		1
- 9	MS35206-245		...SCREW		14
	AN960D8L		...WASHER		14
	SL201-5AA11		...CLIPNUT - (V97393)		14
-10	41A-52202-22		...CHANNEL		1
-11	41A-52202-24		...CHANNEL		1
-12	MS35206-245		...SCREW		4
	AN960D8L		...WASHER		4
	SL201-5AA11		...CLIPNUT - (V97393)		4
	41A-52202-34		...STRIP		4
	41A-52202-52		...STRIP - RECEPTACLE		2
-13	41A-52202-54		...STRIP - RECEPTACLE		2
-14	41A-52202-56		...STRIP - RECEPTACLE		2
-15	41A-52202-94		...STRIP		1
-16	MS35206-245		..SCREW		18
	AN960D8L		..WASHER		18
-17	MS35207-265		.SCREW - (N17)		1
	NAS1149F0332P		.WASHER		2
	NAS1149D0363H		.WASHER		2
	MS21042-3		.LOCK NUT		1
	MS35338-43		.LOCK WASHER		1
	MS35650-302		.NUT		1
	41A-51212		RELAY & TERM BLOCK INSTL (MODIFIED BY 41A-90906-1)		NP
	41A-51212-2		.CHANNEL ASSY		1
	NAS43DD1-56		.SPACER		2
	MS35206-235		.SCREW		2
	AN960D6L		.WASHER		2
	SL200-4-411		.CLIPNUT - (V97393)		2
-18	MS27401-1		.RELAY - (K1RNV)		1
	MS35206-217		.SCREW		2
	AN960D4L		.WASHER		2
	41A-51212-6		.DECAL - (K1RNV)		1
-19	NO NUMBER	**	BRACKET ASSY		1
-20	MS21076-08	**	NUTPLATE		2
-21	S0-1048-8977	**	SOCKET - (V35344)		1
-22	TDH8070-2502	**	RELAY - TIME DELAY (K20J) (V35344)		1
-23	MS21919WH3	**	CLAMP		1
		*	IAW C-12-114-000/CF-351		
		**	IAW C-12-114-000/CF-467		

FIGURE AND INDEX NUMBER	GROUP ELECTRICAL EQUIPMENT MAJOR ASSEMBLY CENTRE CONSOLE ELECTRICAL EQUIPMENT PART NUMBER		1 2 3 4 5 6 7 NOMENCLATURE	EFFEC-TIVITY	UNITS PER ASSY
2-12-13 -24	MS27039-0808	*	SCREW		3
	AN960PD8	*	WASHER		3
	MS21042L08	*	NUT		3
-25	41A-42210-5	*	PANEL - (MOD) (SEE SECTION 16)		REF
	41A-90906-1		EQUIPMENT INSTL - CENTRE CONSOLE (SEE FIG. 2-12-2 & 2-12-14)		NP
-26	M81714/60-16-01		.TERMINAL BLOCK		1
-27	M81714/60-20-01		.TERMINAL BLOCK		2
	M81714/60-20-03		.TERMINAL BLOCK		3
	M81714/60-20-04		.TERMINAL BLOCK		3
	M81714/60-20-06		.TERMINAL BLOCK		2
-28	SJT507504		.RACK ASSY - (V58982)		2
	MS27488-16		.PLUG - END SEAL		2
	MS27488-20		.PLUG - END SEAL		30
-29	MS35207-261		.SCREW		4
-30	41A-90904-72		.LABEL - (TB210)		1
-31	41A-90904-74		.LABEL - (TB211)		1
-32	41A-90904-106		.LABEL - (J210)		1
-33	NW4528236-1		.CIRCUIT BREAKER INSTL - COCKPIT (SEE FIG. 2-12-15)		REF
-34	9911401001-1	**	.BRACKET, RELAY MOUNTING		1
	RM52LHA4972-6-82	**	.NUT, CLIP-ON, FLOATING - (V72962)		4
	MS35206-245	**	.SCREW, MACHINE, PAN HEAD		4
-35	M83536/6-022M	**	.RELAY, ELECTROMAGNETIC		1
	M12883/44-01	**	.SOCKET, RELAY		1
-36	9911401002-1	**	.LABEL - (K1RV)		1
R -37	M81714/63-20S		.MODULE - GROUND - (N19, N33, N34, N80, N81)		5
			-000-		
		*	IAW C-12-114-000/CF-467		
		**	IAW C-12-114-000/CF-525		

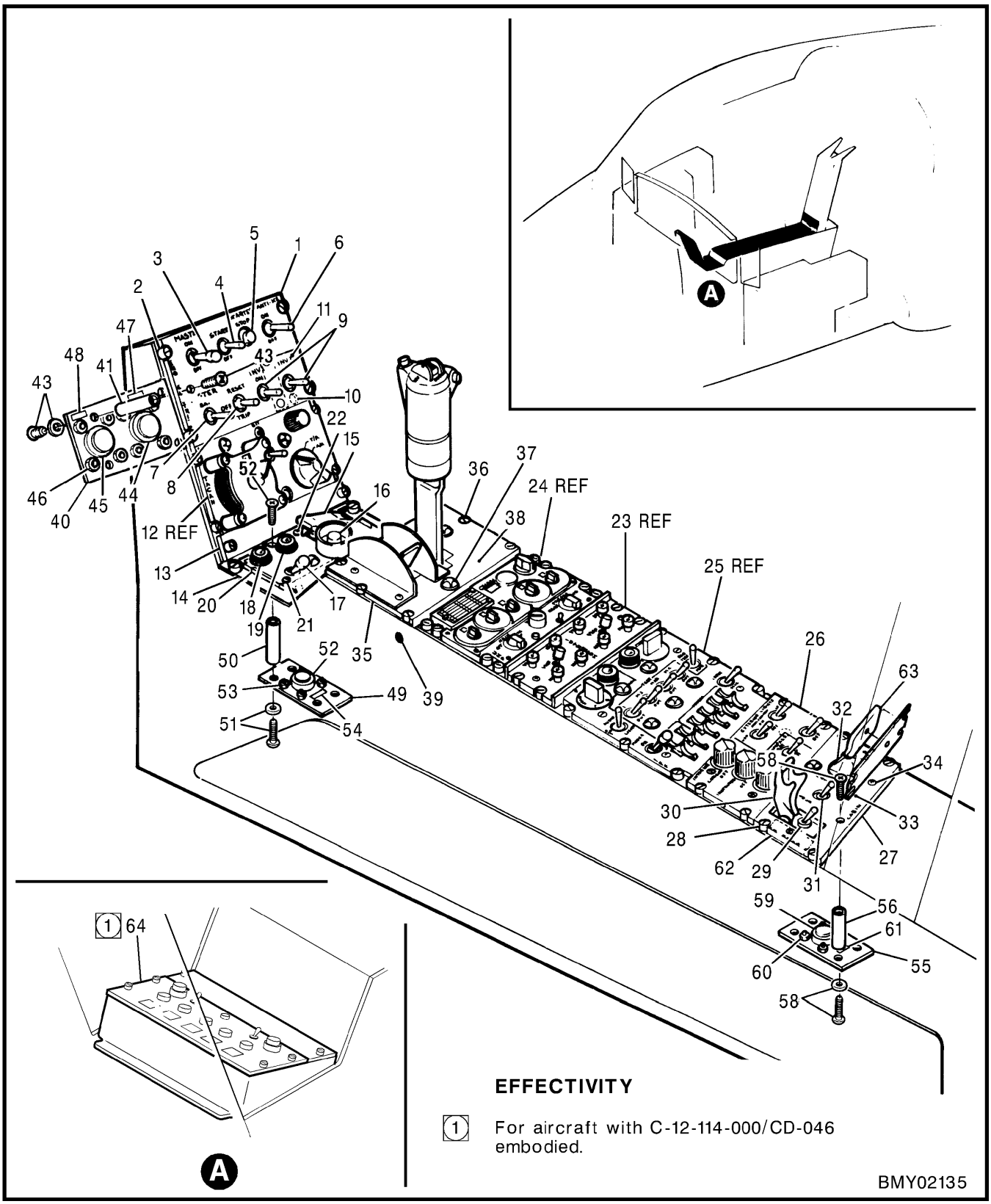

Figure 2-12-14 Centre Console Electrical Equipment

FIGURE AND INDEX NUMBER	GROUP ELECTRICAL EQUIPMENT MAJOR ASSEMBLY CENTRE CONSOLE ELECTRICAL EQUIPMENT PART NUMBER	1 2 3 4 5 6 7 NOMENCLATURE	EFFEC-TIVITY	UNITS PER ASSY
2-12-14 -	K41A-58029 *	KIT - COCKPIT RECONFIGURATION AUX FUEL		NP
	41A-51210	.PANEL ASSY - ENGINE AND ELECTRICS		1
- 1	41A-51202-6	..PANEL ASSY		1
- 2	PFSC3-1/2-38	..FASTENER - (V72794)		4
- 3	MS24660-23D	..SWITCH - (ENGINE MASTER)		1
- 4	MS35059-26	..SWITCH - (ENGINE START)		1
- 5	MS25089-3C	..SWITCH - (STARTER STOP)		1
- 6	MS35059-23	..SWITCH - (ANTI ICING CONTROL)		1
R - 7	MS25068-21	..SWITCH - (DC MASTER), OR		1
R	MS24525-21	..SWITCH - (DC MASTER)		1
- 8	MS35059-27	..SWITCH - (GENERATOR CONTROL)		1
- 9	MS35058-24	..SWITCH - (INVERTER NO. 1 & NO. 2)		2
-10	107A	..CONNECTOR - (V04211)		1
-11	41A-50734	..PANEL - (PLASTIC)		1
	CM8-627	...LAMP		1
	MS35214-27	..SCREW		4
	S1426-6	..WASHER - (V88308)		4
	MS25036-102 **	..TERMINAL LUG		1
	DND1695-7-91 **	..LABEL		1
-12	C5287/ARN504V	.CONTROL UNIT - (TACAN) (SEE SECTION 13)		REF
-13	41A-51222	.PANEL ASSY - DIMMING RELAY & RESISTORS		1
	41A-51222-10	..PANEL		1
	PFCS3-1/2-38	...FASTENER - (V72794)		2
	1947-1	..TERMINAL - (K3105)		3
	MS35338-40	..WASHER		3
	MS24693-S2	..SCREW		3
	RW69G711	..RESISTOR		1
	JAN-1N3613	..DIODE		1
	41A-51222-2	..CHANNEL		1
	MS24693S26	..SCREW		1
	MS27401-1	..RELAY		1
	AN960D4L	..WASHER		2
	MS35206-213	..SCREW		2
	41A-51222-4	..DECAL		1
	41A-51222-6	..DECAL - (CR100 R7L)		1
	41A-51222-8	..DECAL - (K100L)		1
	41A-51209	.PANEL ASSY - AUX FUEL CONTROL (Z1EF)	A	1
-14	41A-51204-4	..PANEL ASSY	A	1
	PFSC3-1/2-38	...FASTENER - (V72794)	A	4
-15	MS24523-22	..SWITCH - (S3AA)	A	1
	41A-51209-10	..GUARD	A	1
-16	MS25089-3CR	..SWITCH - (S2AA)	A	1
	A120-129	..GUARD - (V05402)	A	1
-17	MS24523-23G	..SWITCH - (S1EF)	A	1
-18	MS25041-4	..LIGHT ASSY	A	2
-19	MS25010B16A	..LIGHT ASSY	A	1
	MS25237-327	..LAMP	A	1
-20	41A-50731	..PANEL - (PLASTIC)	A	1
-21	MS35214-27	..SCREW	A	2
-22	MS35273-30	..SCREW	A	1
	S1426-6	..WASHER - (V88308)	A	3
-23	5071-1-1/AIC-504	.CONTROL - (V81574) - (DUAL INTERCOM) (SEE SECTION 13)		REF
-24	706643-802CF004/ARC164	.CONTROL UNIT - (UHF RADIO) (SEE SECTION 13)		REF
-25	C6280P/APX77	.CONTROL UNIT - (IFF) (SEE SECTION 13)		REF
	41A-51208	.PANEL ASSY - LIGHTING CONTROL		1
-26	41A-50709	..CONTROL PANEL - INTERIOR & EXTERIOR		1
	41A-50735	..PANEL - (RAU) PLASTIC		1
	MS35214-27	..SCREW		3
	S1426-6	..WASHER - (V88308)		3
	*	IAW C-12-114-000/CD-031		
	**	IAW C-12-114-000/CF-524		
	A	FOR AIRCRAFT WITHOUT C-12-114-000/CD-046 INCORPORATED		

FIGURE AND INDEX NUMBER	GROUP ELECTRICAL EQUIPMENT MAJOR ASSEMBLY CENTRE CONSOLE ELECTRICAL EQUIPMENT PART NUMBER		1 2 3 4 5 6 7 NOMENCLATURE	EFFEC-TIVITY	UNITS PER ASSY
2-12-14	41A-52015		ELECTRICAL EQUIP INSTL - CTR CONSOLE (MOD) (SEE FIG. 2-12-13)		REF
	41A-52017-800		.PANEL ASSY - AIR CONDITIONING		1
-27	41A-42206-20		..PANEL		1
-28	PFSC3-1/2-8		..FASTENER - (V72794)		4
-29	MS35059-23		..SWITCH - (SHUT-OFF & DUMP)		1
-30	MS25224-1		..GUARD		1
-31	MS25128-1		..SWITCH - (TEMP CONTROL)		1
	41A-57144		..HARNESS ASSY		1
-32	4500-14	*	...SELECTOR - (V70210) (IAW 41A-95104)		1
	RL07S113J	*	...RESISTOR		1
-33	41A-50718		..PANEL - PLASTIC		1
-34	MS35214-27		..SCREW		2
	S1426-6		..WASHER - (V88308)		2
	SL88-632-38-09		..CLIPNUT - (V97393)		2
	41A-52020		.PANEL ASSY - THROTTLE & FLAP		1
-35	41A-42206-4		..PLATE ASSY		1
-36	PFSC3-1/2-38		..FASTENER - (V72794)		7
-37	A7165-1		..LIGHT ASSY		3
	MS25337-327		..LAMP		3
	41A-57139		..HARNESS ASSY		1
-38	41A-50719		..PANEL		1
-39	MS35489-6		GROMMET - (IAW C-12-114-000/CF-379)		1
	41A-90906-1		ELECTRICAL EQUIPMENT INSTL - CENTRE CONSOLE (SEE FIG. 2-12-2 & 2-12-13)		REF
	41A-90906-2		.CONTROL PANEL ASSY - ENGINE & ELECTRONICS		1
-40	41A-91000-2		..PLATE		2
-41	NW4528153-2		..POST		8
-42	MS24693-S28		..SCREW		8
-43	MS35206-245		..SCREW		8
	MS35338-41		..WASHER		8
-44	MS3470L18-32P		..CONNECTOR - (J208)		1
-45	MS3470L18-11P		..CONNECTOR - (J209)		1
	M85049/31-18N		..BACKSHELL		2
-46	MS35206-217		..SCREW		8
	AN960KD4L		..WASHER		8
	MS21042L04		..NUT		8
-47	41A-90904-76		..LABEL - (208)		1
-48	41A-90904-78		..LABEL - (209)		1
	41A-90906-4		.CONTROL PANEL ASSY - (AUXILIARY FUEL)		1
-49	41A-91000-1		..PLATE		1
-50	NW4528153-2		..POST		1
	MS35206-245		..SCREW		4
-51	MS24693-S28		..SCREW		4
	MS35338-41		..WASHER		4
-52	MS3470L14-15P		..CONNECTOR - (J210)		1
	M85049/31-14N		..BACKSHELL		1
-53	MS35206-217		..SCREW		4
	AN960KD4L		..WASHER		4
	MS21042L04		..NUT		4
-54	41A-90904-106		..LABEL - (J210)		1
	41A-90906-3		.CONTROL PANEL ASSY - AIR CONDITIONING		1
-55	41A-91000-1		..PLATE		1
-56	NW4528153-2		..POST		4
-57	MS24693-S28		..SCREW		4
		*	IAW C-12-114-000/CF-402		

FIGURE AND INDEX NUMBER	GROUP ELECTRICAL EQUIPMENT MAJOR ASSEMBLY CENTRE CONSOLE ELECTRICAL EQUIPMENT PART NUMBER		1 2 3 4 5 6 7 NOMENCLATURE	EFFEC-TIVITY	UNITS PER ASSY
2-12-14 -58	MS35206-245		..SCREW		4
	MS35338-41		..WASHER		4
-59	MS3470L14-19P		..CONNECTOR - (J211)		1
	M85049/31-14N		..BACKSHELL		1
-60	MS35206-217		..SCREW		4
	AN960KD4L		..WASHER		4
	MS21042L04		..NUT		4
-61	41A-90904-112		..LABEL - (J211)		1
-62	NW4528161-1		..PLATE - SWITCH		1
	41A-90906-5		.CONTROL PANEL ASSY - AUXILIARY OVERRIDE (SEE SECTION 13)		REF
-63	41A-90946-1		..PANEL - BLANKING (SEE SECTION 13)		REF
-64	622-6813-001	*	CONTROLLER - ADF (V95105) (SEE SECTION 13)		REF
			-000-		
		*	IAW C-12-114-000/CD-046		

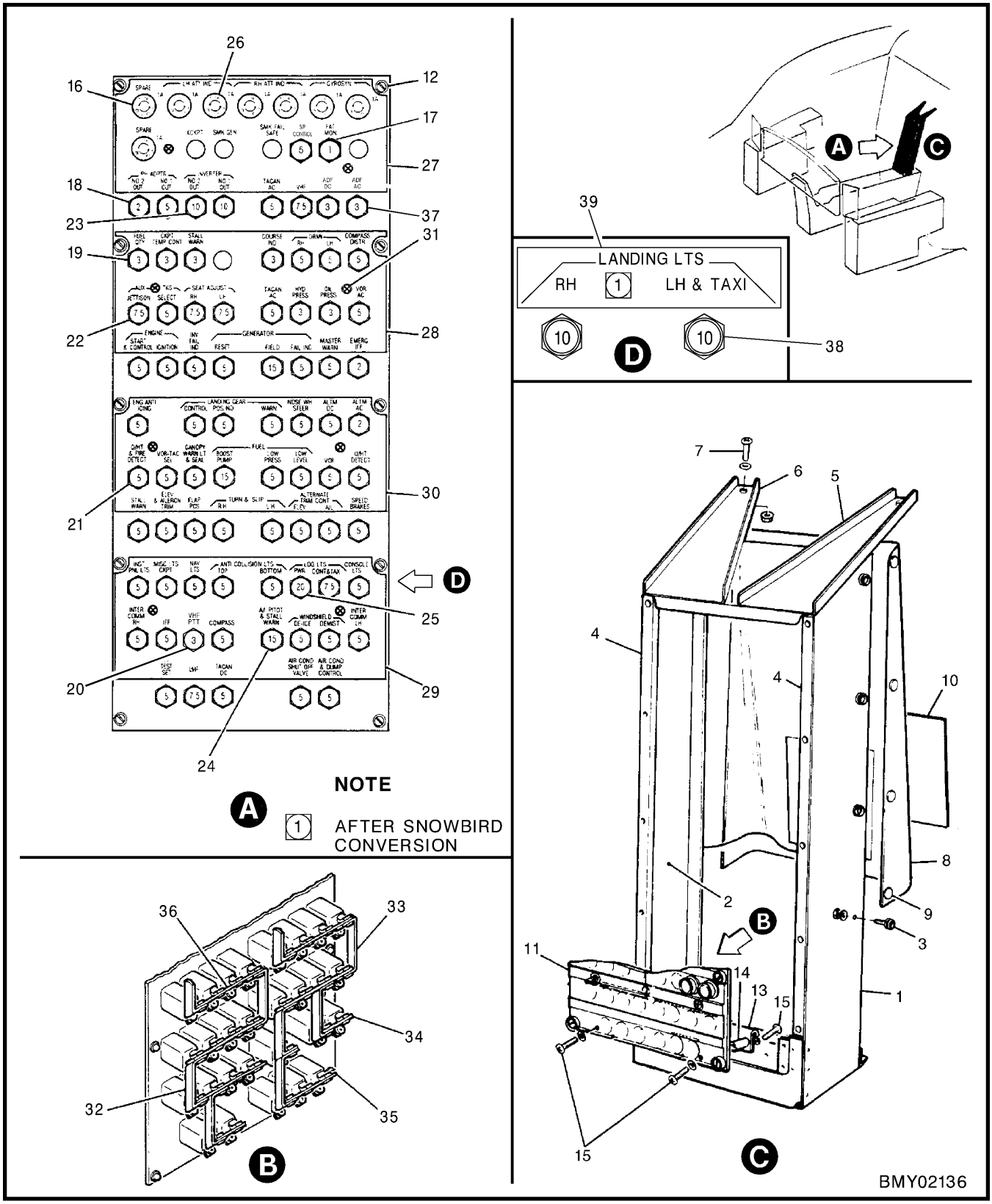

Figure 2-12-15 Centre Console Circuit Breaker Panel

FIGURE AND INDEX NUMBER	GROUP ELECTRICAL EQUIPMENT MAJOR ASSEMBLY CENTRE CONSOLE CIRCUIT BREAKER PANEL PART NUMBER		1 2 3 4 5 6 7 NOMENCLATURE	EFFEC-TIVITY	UNITS PER ASSY
2-12-15 -	41A-42201	*	PANEL INSTL - CIRCUIT BREAKER (MODIFIED BY NW4528236-1) (SEE FIG. 2-12-9)		NP
- 1	41A-42201-2		.PANEL - (SIDE SUPPORT LH)		1
- 2	41A-42201-3		.PANEL - (SIDE SUPPORT RH)		1
- 3	MS27980-13C		.STUD		11
	AN960D8L		.WASHER		11
	MS21042L08		.NUT		11
- 4	S4901-01416		.STRIP - (V88308)		2
- 5	41A-42201-4		.CHANNEL		1
- 6	41A-42201-5		.CHANNEL		1
- 7	NAS623-3-1		.SCREW		6
	AN960PD10L		.WASHER		6
	MS21042L3		.NUT		2
	41A-41566		.COVER INSTL - CIRCUIT BREAKER PANEL BACK		NP
	41A-41566-2		..COVER ASSY - CIRCUIT BREAKER PANEL BACK		1
- 8	41A-41566-4		...COVER - BACK		1
- 9	XX10129-A8-002		...BUTTON		11
-10	41A-41566-6		...PLATE		1
	41A-52018-806		.PANEL ASSY - CIRCUIT BREAKER		1
-11	41A-42202		..PANEL ASSY - CB MOUNTING		1
	107A		..CONNECTOR - (V04211)		4
	41A-57141-804		..HARNESS ASSY - CB PANEL WIRING		1
-12	PFSC3-1/2-38		..FASTENER - (V72794)		10
-13	41A-42202-4		..STRIP		1
-14	S1331E5		..POST - (V88308)		2
-15	MS35206-243		..SCREW		4
	AN960D8		..WASHER		4
-16	HKP		..HOLDER - (V71400) (FUSE)		8
	NW4528236-1		CIRCUIT BREAKER INSTL - COCKPIT (SEE FIG. 2-12-13)		NP
-17	MS22073-1		.CIRCUIT BREAKER - (1A)		1
-18	MS22073-2		.CIRCUIT BREAKER - (2A)		3
-19	MS22073-3		.CIRCUIT BREAKER - (3A)		6
-20	1500-059-3	***	.CIRCUIT BREAKER - (3A)		1
-21	MS25244-5		.CIRCUIT BREAKER - (5A)		52
-22	MS25244-7-1/2		.CIRCUIT BREAKER - (7.5A)		5
-23	MS25244-10		.CIRCUIT BREAKER - (10A)		2
-24	MS25244-15		.CIRCUIT BREAKER - (15A)		3
-25	MS25244-20		.CIRCUIT BREAKER - (20A) OR		1
	MS25244-10		.CIRCUIT BREAKER - (10A)	A	1
-26	MDL-1		.FUSE - (V71400)		8
-27	NW4528248-1		.PANEL - EDGE LIT		1
-28	NW4528083-1		.PANEL - EDGE LIT		1
-29	NW4528084-1		.PANEL - EDGE LIT		1
-30	NW4528085-1		.PANEL - EDGE LIT		1
-31	MS35214-28		.SCREW		8
-32	NW4528086-1		.BUSBAR - LH		10
-33	NW4528086-2		.BUSBAR - RH		6
-34	MS25226-4-2		.BUSBAR		3
-35	MS25226-4-3		.BUSBAR		4
-36	MS25226-4-4		.BUSBAR		12
	4601109-1	**	CIRCUIT BREAKERS INSTL - ADF (SEE SECTION 13)		REF
-37	MS3320-3	**	.CIRCUIT BREAKER - (CB501 & CB502)		2
-38	MS25244-7-1/2		.CIRCUIT BREAKER - (7.5A) OR		1
	MS25244-10		.CIRCUIT BREAKER - (10A)	A	1
-39	0225255		.DECAL	A	1
			-000-		
		*	IAW C-12-114-000/CF-357, 360, 367, 426, CD-030 & 031		
		**	IAW C-12-114-000/CD-046		
		***	IAW C-12-114-000/CF-525		
		A	AFTER SNOWBIRD CONVERSION		

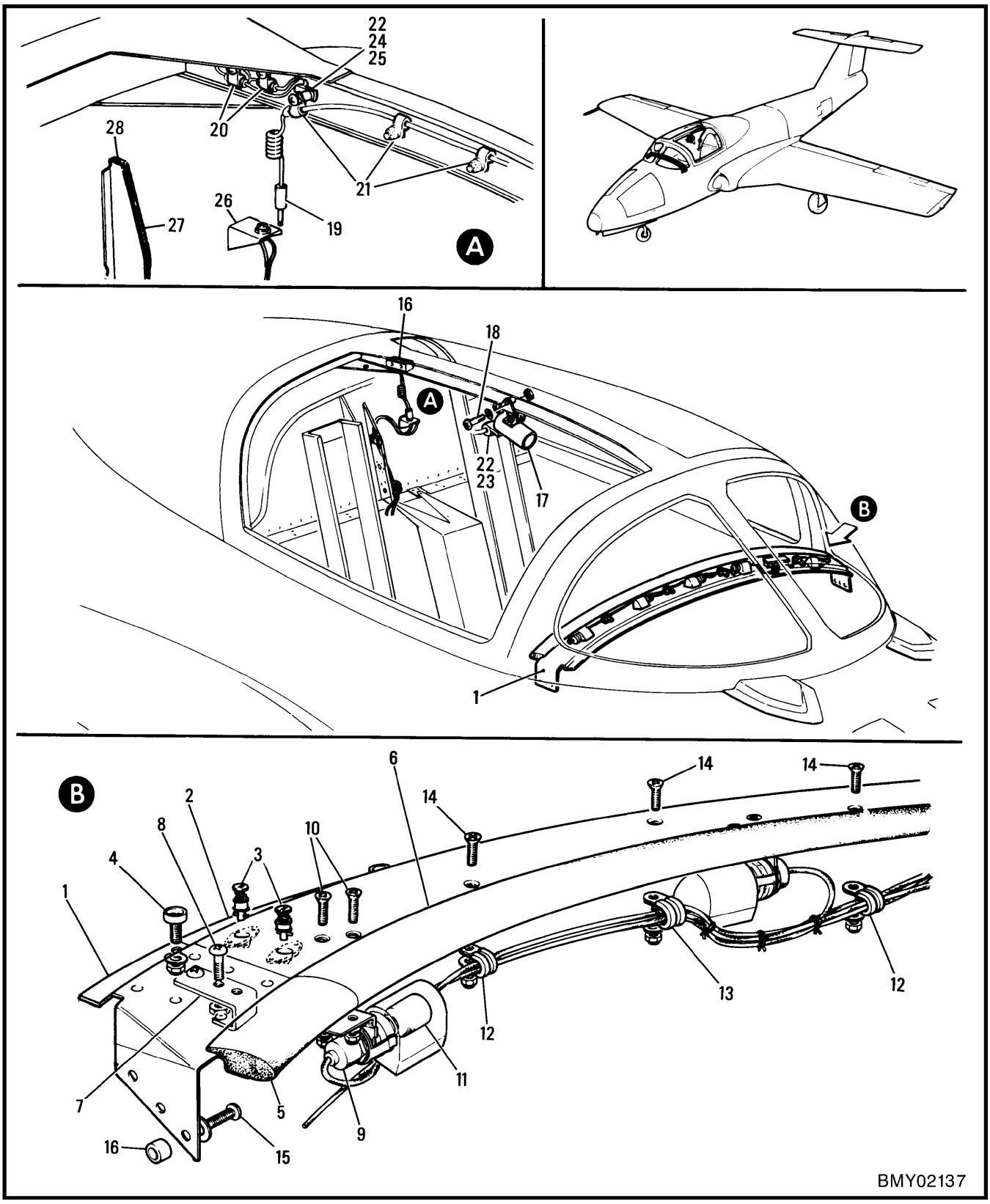

Figure 2-12-16 Instrument Panel Shroud Lights

FIGURE AND INDEX NUMBER	GROUP ELECTRICAL EQUIPMENT MAJOR ASSEMBLY INSTRUMENT PANEL SHROUD LIGHTS PART NUMBER	1 2 3 4 5 6 7 NOMENCLATURE	EFFEC-TIVITY	UNITS PER ASSY
2-12-16 -	41A-52011-800 *	SHROUD & LIGHTING EQUIPMENT INSTL - INSTRUMENT PANEL (MODIFIED BY NW4528200-3) (SEE FIG. 2-12-9)		NP
- 1	41A-52011-40	.CHANNEL - (INSTRUMENT SHROUD LH)		1
	41A-52011-41	.CHANNEL - (INSTRUMENT SHROUD RH)		1
	244-22	.RECEPTACLE - (V71286)		4
- 2	41A-52011-38	.CHANNEL - (INSTRUMENT SHROUD CENTRE)		1
	4002G	.GROMMET - (V71286)		4
	R4G	.SNAP RING - (V71286)		4
- 3	40S5-3	.STUD - (V71286)		4
- 4	MS27980-13C	.STUD		9
	AN960D8L	.WASHER		9
	MS21042L08	.NUT		9
- 5	41A-52011-44	.SPONGE - (SHROUD LH)		1
	41A-52011-45	.SPONGE - (SHROUD RH)		1
- 6	41A-52011-42	.SPONGE - (SHROUD CENTRE)		1
- 7	NO NUMBER	.BRACKET - SEAT SAFETY PIN STOWAGE (IAW C-12-114-000/CF-295)		2
- 8	MS27039-1-06	.SCREW		4
	52N1610-02	.NUT - (V72962)		4
	41A-57145-800	.HARNESS ASSY - PILOTS INSTR PANEL SHROUD		1
- 9	MS25027-2	..LIGHT ASSY		5
-10	MS24693-25	.SCREW		10
	AN960D8L	.WASHER		10
	MS21042L08	.NUT		10
-11	MS25069-1495	.LAMP		5
-12	MS21919WDG2	.CLAMP		4
-13	MS21919WDG3	.CLAMP		1
-14	MS24693-C26B	.SCREW		5
	AN960D8L	.WASHER		5
	MS21042L08	.NUT		5
-15	MS35207-264	.SCREW		10
	AN960D10	.WASHER		10
-16	NAS43DD3-8	.SPACER		6
	41A-42168	FLOODLIGHT INSTL - LET DOWN CHART (MODIFIED BY NW4528200-3) (SEE FIG. 2-12-9)		NP
-17	33645-1495	.FLOODLIGHT ASSY - (V72914) (IAW 44-50758)		1
	MS25069-1495	.LAMP - (DS233L)		1
	MS21919WDG2	.CLAMP - (IAW C-12-114-000/CF-338)		1
	B7669-3	.CLAMP - TAPPED (SWIVEL BASE)		1
	B7669-4	.CLAMP - UNTAPPED		1
-18	MS37039-1-10	.SCREW		2
	AN960-10L	.WASHER		2
	MS21042L3	.NUT		2
	NW4528200-3	WIRING INSTL - CANOPY (SEE FIG. 2-12-2)		NP
	NW4528162-1	.LEAD ASSY - CANOPY SPOTLIGHT		1
-19	MS35375-1	..CONNECTOR - (P11L)		1
-20	MS21919WDG4	.CLAMP		2
-21	MS21919WDG5	.CLAMP		3
-22	MS21919WDG8	.CLAMP		2
-23	MS35206-242	.SCREW		1
-24	MS35206-251	.SCREW		1
-25	NAS43DD-3-64	.SPACER		1
	NAS1149FN816P	.WASHER		10
	MS21042-08	.NUT		6
	41A-35037	BULKHEAD INSTL - REAR PRESSURE (SEE SECTION 3)		REF
-26	NO NUMBER	.BRACKET - (IAW C-12-114-000/CF-292)		1
	41A-35037-4	.WEB ASSY - REAR PRESSURE BULKHEAD UPPER (SEE SECTION 3)		REF
-27	41A-35037-220	..STRIP		1
-28	41A-35037-222	..STRIP		1
		-000-		
	*	IAW C-12-114-000/CF-295		

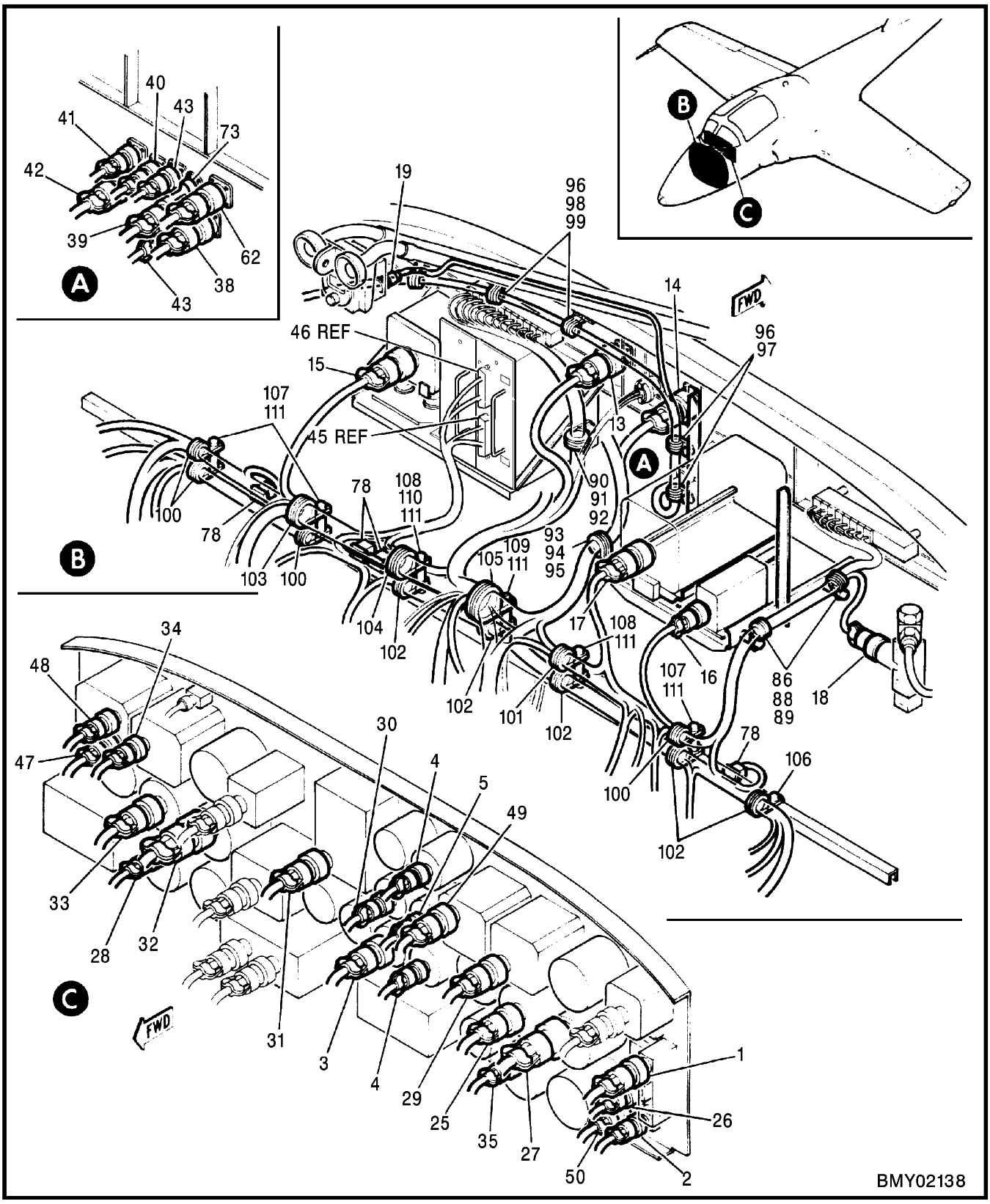

Figure 2-12-17 (Sheet 1 of 5) Cockpit Electrical Harnesses

FIGURE AND INDEX NUMBER	GROUP ELECTRICAL EQUIPMENT MAJOR ASSEMBLY COCKPIT ELECTRICAL HARNESSES PART NUMBER	1 2 3 4 5 6 7 NOMENCLATURE	EFFEC-TIVITY	UNITS PER ASSY
2-12-17 -	NW4528200-2	WIRING INSTL - COCKPIT (SEE FIG. 2-12-2)		NP
	NW4528323-1	.HARNESS ASSY - LH COCKPIT		1
	NW4528217-1	PANEL ASSY		REF
- 1	MS3476L14-19S	..CONNECTOR - (P14G) (L/G CONT UNIT)		1
	M85049/52-S-14N	..BACKSHELL		1
- 2	MS3456L10SL-3S	..CONNECTOR - (P3G) (LH MAIN L/G PIN)		1
	M85049/52-S-10N	..BACKSHELL		1
- 3	165-61-1014	..CONNECTOR - (V02660) (P1DC) (FUEL QTY INDICATOR)		1
- 4	MS3456L10SL-3S	..CONNECTOR - (P1DA & P1EA) (WING FLAP POSITION & TACH INDICATOR)		2
	M85049/52-S-10N	..BACKSHELL		2
- 5	MS3456L14S-2S	..CONNECTOR - (P1EB) (ENGINE OIL PRESS)		1
	M85049/52-S-14N	..BACKSHELL		1
- 6	MS3476L14-19S	..CONNECTOR - (P1J)		1
	M85049/52-S-14N	..BACKSHELL		1
- 7	MS3470L14-19S	..CONNECTOR - (J7)		1
	M85049/52-S-14N	..BACKSHELL		1
- 8	MS3476L22-21S	..CONNECTOR - (P36)		1
	M85049/51-S-22N	..BACKSHELL		1
- 9	MS3476L20-39S	..CONNECTOR - (P38)		1
	M85049/51-S-20N	..BACKSHELL		1
-10	MS3470L8-33S	..CONNECTOR - (J2M)		1
	M85049/52-S-8N	..BACKSHELL		1
-11	20P230-4	..CONNECTOR - (V24931) (P32)		1
-12	MS3476L12-3S	..CONNECTOR - (P2MA) (LH SEAT ACTUATOR)		1
	M85049/52-S-12N	..BACKSHELL		1
	NW4528320-1	.HARNESS ASSY - CENTRE COCKPIT		1
-13	MS3476L22-41SW	..CONNECTOR - (P17)		1
	M85049/52-S-22N	..BACKSHELL		1
-14	MS3476L20-16SW	..CONNECTOR - (P11)		1
	M85049/52-S-20N	..BACKSHELL		1
-15	MS3456L20-27S	..CONNECTOR - (P6HA) (CABIN TEMP CONTROL)		1
	M85049/52-S-20N	..BACKSHELL		1
-16	MS3456L14S-5S	..CONNECTOR - (P1FB) (RATE GYRO SU)		1
	M85049/52-S-14N	..BACKSHELL		1
-17	MS3456L24-28S	..CONNECTOR - (P2FB) (VERTICAL GYRO)		1
	M85049/52-S-24N	..BACKSHELL		1
-18	MS3456L10SL-4S	..CONNECTOR - (P2HA) (CABIN SAFETY VALVE)		1
	M85049/52-S-10N	..BACKSHELL		1
-19	AN3116-2	..CONNECTOR - (P1L) (STANDBY COMPASS)		1
-20	MS3476L18-32S	..CONNECTOR - (P208) (ENG & A/C ELEC CONT PNL)		1
	M85049/31-18N	..BACKSHELL		1
-21	MS3476L18-11S	..CONNECTOR - (P209) (ENG & A/C ELEC CONT PNL)		1
	M85049/31-18N	..BACKSHELL		1
-22	MS3476L14-15S	..CONNECTOR - (P210) (AUX FUEL CONT PNL)		1
	M85049/31-14N	..BACKSHELL		1
-23	MS3476L18-32S	..CONNECTOR - (P100L) (LTG CONT PNL)		1
	M85049/31-18N	..BACKSHELL		1
-24	MS3476L14-19S	..CONNECTOR - (P211) (AIR CONDITIONING CONT PNL)		1
	M85049/31-14N	..BACKSHELL		1
-25	MS3476L18-32S	..CONNECTOR - (P4FC) (LH DRM 1)		1
	M85049/15-S-18N	..BACKSHELL		1
-26	MS3456L10SL-3S	..CONNECTOR - (P2G) (NOSE L/G PIN)		1
	M85049/52-S-10N	..BACKSHELL		1
-27	MS3456L28-12S	..CONNECTOR - (P5FC) (COURSE INDICATOR)		1
	M85049/52-S-28N	..BACKSHELL		1

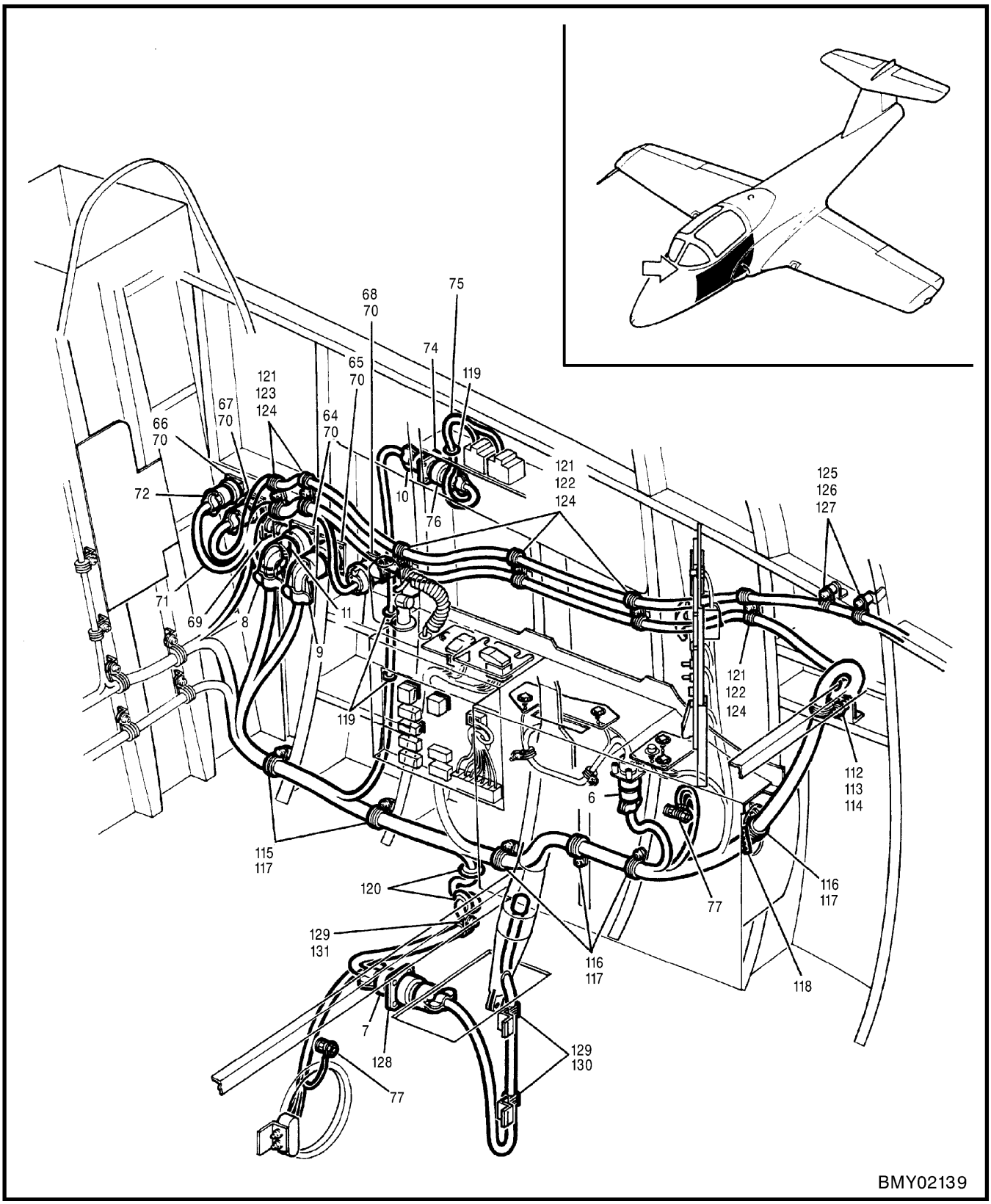

Figure 2-12-17 (Sheet 2 of 5) Cockpit Electrical Harnesses

FIGURE AND INDEX NUMBER	GROUP ELECTRICAL EQUIPMENT MAJOR ASSEMBLY COCKPIT ELECTRICAL HARNESSES PART NUMBER	1 2 3 4 5 6 7 NOMENCLATURE	EFFEC-TIVITY	UNITS PER ASSY
2-12-17 -28	MS3456L10SL-3S	..CONNECTOR - (P1FA) (RH TURN & SLIP INDICATOR)		1
	M85049/52-S-10N	..BACKSHELL		1
-29	MS3476L14-19S	..CONNECTOR - (P3FB) (LH ATTITUDE INDICATOR)		1
	M85049/52-S-14N	..BACKSHELL		1
-30	MS3456L14S-2S	..CONNECTOR - (P1DB) (HYDR PRESS INDICATOR)		1
	M85049/52-S-14N	..BACKSHELL		1
-31	MS3476L18-32S	..CONNECTOR - (P1WA) (MASTER WARNING BOX)		1
	M85049/52-S-18N	..BACKSHELL		1
-32	MS3456L28-12S	..CONNECTOR - (P7FC) (RH COURSE INDICATOR)		1
	M85049/52-S-28N	..BACKSHELL		1
-33	MS3476L18-32S	..CONNECTOR - (P6FC) (DRMI)		1
	M85049/52-S-18N	..BACKSHELL		1
-34	MS3456L10SL-3S	..CONNECTOR - (P4FB) (ATTITUDE INDICATOR)		1
	M85049/52-S-10N	..BACKSHELL		1
-35	MS3456L10SL-3S	..CONNECTOR - (P2FA) (LH TURN & SLIP INDICATOR)		1
	M85049/52-S-10N	..BACKSHELL		1
-36	MS3476L20-16S	..CONNECTOR - (P44) (RH BH DISC) (FS 217)		1
	M85049/52-S-20N	..BACKSHELL		1
-37	M641/6-1	..CONNECTOR - (J7L) (CANOPY FLOODLIGHT DISC)		1
-38	MS3476L24-61SW	..CONNECTOR - (P25)		1
	M85049/52-S-24N	..BACKSHELL		1
-39	MS3476L24-61S	..CONNECTOR - (P23)		1
	M85049/52-S-24N	..BACKSHELL		1
-40	MS3476L20-16S	..CONNECTOR - (P15)		1
	M85049/52-S-20N	..BACKSHELL		1
-41	MS3476L20-39S	..CONNECTOR - (P13)		1
	M85049/52-S-20N	..BACKSHELL		1
-42	MS3476L22-41S	..CONNECTOR - (P19)		1
	M85049/52-S-22N	..BACKSHELL		1
-43	MS3476L20-41S	..CONNECTOR - (P3RV & P27)		2
	M85049/31-20N	..BACKSHELL		2
-44	MS3476L12-3S	..CONNECTOR - (P1M) (CANOPY ACTUATOR)		1
	M85049/52-S-12N	..BACKSHELL		1
	NW4528320-1	.HARNESS ASSY - CENTRE COCKPIT		1
-45	M24308/4-4	..CONNECTOR - (P222)		REF
-46	M24308/4-5	..CONNECTOR - (P221)		REF
	NW4528322-1	.HARNESS ASSY - RH COCKPIT		1
-47	MS3476L14-12S	..CONNECTOR - (P1F) (ALTITUDE COMPUTER INDICATOR)		1
	M85049/52-S-14N	..BACKSHELL		1
-48	MS3476L14-15S	..CONNECTOR - (P2F) (ALTITUDE COMPUTER INDICATOR)		1
	M85049/52-S-14N	..BACKSHELL		1
-49	M83723/86R1624N	..CONNECTOR - (P3F) (SERVOED ALTIMETER)		1
	M85049/52-S-16N	..BACKSHELL		1
-50	MS3456L10SL-3S	..CONNECTOR - (P1G) (RH MAIN L/G PIN)		1
	M85049/52-S-10N	..BACKSHELL		1
-51	MS3476L18-32S	..CONNECTOR - (P4P) (DC REG CONT PNL)		1
	M85049/52-S-18N	..BACKSHELL		1
-52	MS3470L20-41S	..CONNECTOR - (J1F) (SERVOED ALTIMETER TEST)		1
	M85049/31-20N	..BACKSHELL		1
-53	MS3470L14-19S	..CONNECTOR - (J8) (RH CONT COLUMN DISC)		1
	M85049/52-S-14N	..BACKSHELL		1
-54	MS3476L20-39S	..CONNECTOR - (P46) (RH BH DISC) (FS 217)		1
	M85049/51-20N	..BACKSHELL		1
-55	MS3476L22-21S	..CONNECTOR - (P42)		1
	M85049/51-22N	..BACKSHELL		1

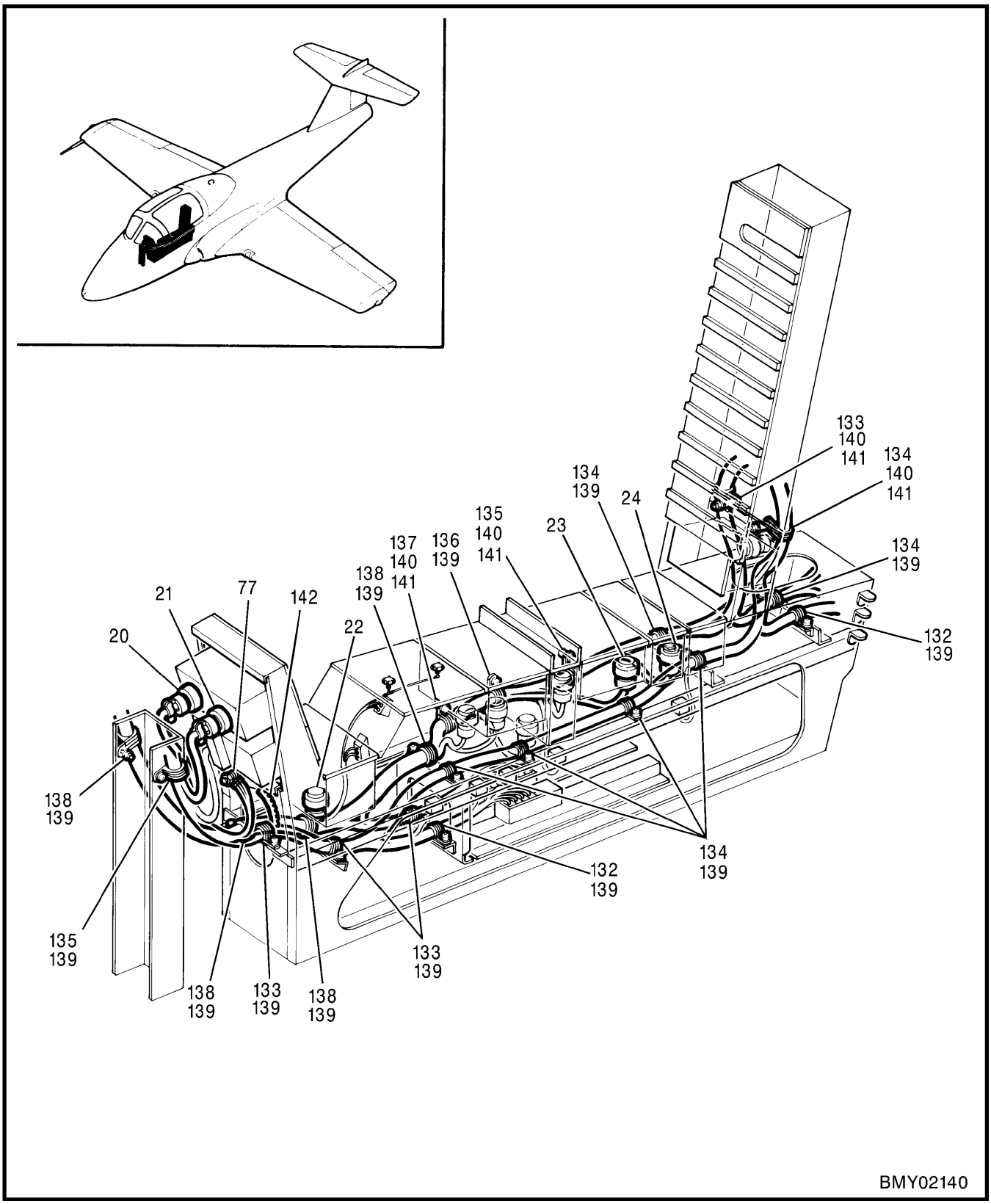

Figure 2-12-17 (Sheet 3 of 5) Cockpit Electrical Harnesses

FIGURE AND INDEX NUMBER	GROUP ELECTRICAL EQUIPMENT MAJOR ASSEMBLY COCKPIT ELECTRICAL HARNESSES PART NUMBER	1 2 3 4 5 6 7 NOMENCLATURE	EFFEC-TIVITY	UNITS PER ASSY
2-12-17 -56	MS3476L16-8S	..CONNECTOR - (P30) (CANTED BULKHEAD DISC) (FS 217)		1
	M85049/52-S-16N	..BACKSHELL		1
-57	MS3476L12-3S	..CONNECTOR - (P1MA) (RH SEAT ACTUATOR)		1
	M85049/52-S-12N	..BACKSHELL		1
-58	MS3476L14-12S	..CONNECTOR - (P2EA) (ENGINE LIFE MONITOR)		1
	M85049/52-S-14N	..BACKSHELL		1
-59	S0-1048-8308	..SOCKET - RELAY (J20J)		1
-60	M12883/45-01	..SOCKET - RELAY (J1HB & J2HB)		2
-61	M12883/41-11	..SOCKET - RELAY (J100L & J1FC)		2
R	M39029/92-533	..PIN, ELECTRICAL		8
-62	MS3476L24-61SX	..CONNECTOR - (P29)		1
	M85049/52S-24N	..BACKSHELL		1
-63	MS3456L16S1S	..CONNECTOR - (P15G) (LANDING GEAR WARNING)		1
	M85049/52-S-16N	..BACKSHELL		1
-64	SPB22-21PS(003)	.CONNECTOR - (V77820) (J36)		1
	10-150949-22	.GASKET - (V77820)		1
-65	SPB20-39PS(003)	.CONNECTOR - (V77820) (J38)		1
	10-150949-20	.GASKET - (V77820)		1
-66	SP00W10-6P(003)	.CONNECTOR - (V77820) (J40)		1
	10-150949-10	.GASKET - (V77820)		1
-67	10-37090-121	.RECEPTACLE - (V77820) (E5)		1
	10-36675-10	.GASKET - (V77820)		1
-68	10-260131-201	.RECEPTACLE - (V77820) (E6)		1
	10-36675-18	.RECEPTACLE - (V77820)		1
-69	20AS132-3	.CONNECTOR - (V24931) (J32)		1
-70	MS35206-217	.SCREW		20
	NAS1149FN416P	.WASHER		40
	MS21042-04	.NUT		20
-71	NW4528408-1	.CABLE ASSY - LH COCKPIT		1
-72	MS3476L10-6S	..CONNECTOR - (P40)		1
	M85049/52-S-10N	..BACKSHELL		1
-73	MS3476L12-8P	..CONNECTOR - (P21)		1
	M85049/52-S-12N	..BACKSHELL		1
-74	AN500C4-8	.SCREW		4
	NAS1149FN416P	.WASHER		4
	MS21042-04	.NUT		4
-75	NW4528419-1	.CABLE ASSY		1
-76	MS3476L8-33P	..CONNECTOR - (P2M)		1
	M85049/52-S-8N	..BACKSHELL		1
-77	MS35207-265	.SCREW - GROUND STUD (N4, N7, N41, N70 & N87)		5
	NAS1149D0363H	.WASHER		10
	NAS1149F0332P	.WASHER		10
	MS35338-43	.WASHER		5
	MS35650-302	.NUT		5
	MS21042-3	.NUT		5
-78	M81714/63-20S	.MODULE - GROUND (N5, N25, N26, N65, N77 & N108)		6
-79	SPB22-21PS(003)	.CONNECTOR - (V77820) (J42)		1
	10-150949-22	.GASKET - (V77820)		1
-80	SPB20-16PS(003)	.CONNECTOR - (V77820) (J44)		1
	10-150949-20	.GASKET - (V77820)		1
-81	SPB20-39PS(003)	.CONNECTOR - (V77820) (J46)		1
	10-150949-20	.GASKET - (V77820)		1
-82	MS3470L12-3S	.CONNECTOR - (J34)		1
	M85049/52-S-12N	.BACKSHELL		1
-83	MS35206-217	.SCREW		16
	NAS1149FN416P	.WASHER		32
	MS21042-04	.NUT		16

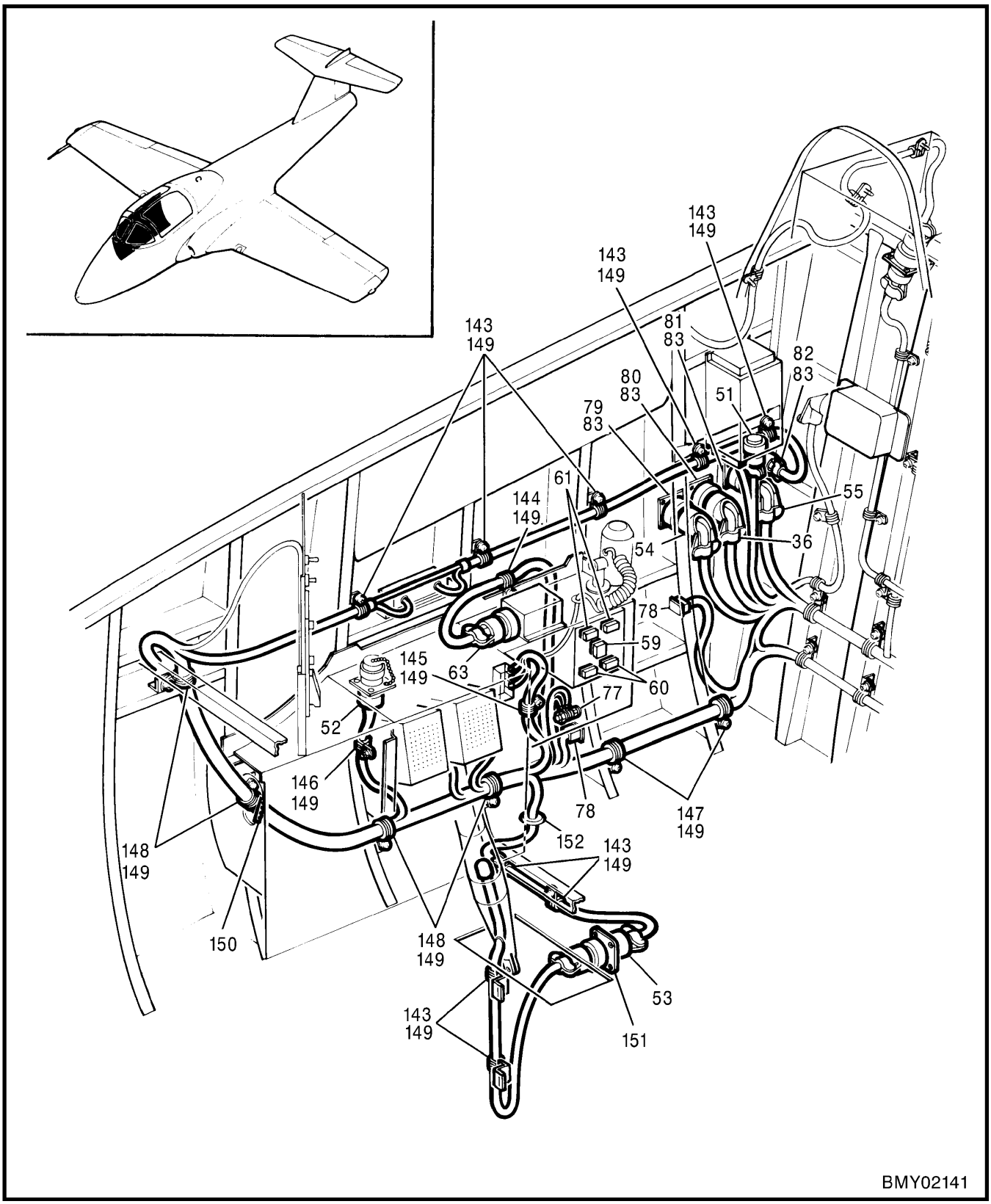

Figure 2-12-17 (Sheet 4 of 5) Cockpit Electrical Harnesses

FIGURE AND INDEX NUMBER	GROUP ELECTRICAL EQUIPMENT MAJOR ASSEMBLY COCKPIT ELECTRICAL HARNESSES PART NUMBER	1 2 3 4 5 6 7 NOMENCLATURE	EFFEC-TIVITY	UNITS PER ASSY
2-12-17 - 84	SPB16-8PS(003)	.CONNECTOR - (V77820) (J30) (CANTED BULKHEAD DISC) (FS 217)		1
	10-150949-16	.GASKET - (V77820)		1
- 85	MS35206-215	.SCREW		4
	NAS1149FN416P	.WASHER		8
	MS21042-4	.NUT		4
- 86	MS21919WDG10	.CLAMP		2
- 87	MS35206-245	.SCREW		1
	NAS1149FN816P	.WASHER		2
	MS21042-08	.NUT		1
- 88	MS35206-251	.SCREW		2
- 89	NAS43DD-3-64	.SPACER		2
	NAS1149FN816P	.WASHER		4
	MS21042-08	.NUT		2
- 90	MS21919WDG11	.CLAMP		1
- 91	MS35206-332	.SCREW		1
- 92	NAS43DD-3-40	.SPACER		1
	NAS1149FN816P	.WASHER		2
	MS21042-08	.NUT		1
- 93	MS21919WDG12	.CLAMP		1
- 94	MS35206-247	.SCREW		1
- 95	NAS43DD-3-16	.SPACER		1
	NAS1149FN816P	.WASHER		2
	MS21042-08	.NUT		1
- 96	MS21919WDG5	.CLAMP		5
- 97	MS35206-245	.SCREW		4
- 98	MS35206-249	.SCREW		1
- 99	NAS43DD-3-32	.SPACER		1
	NAS1149FN816P	.WASHER		10
	MS21042-08	.NUT		5
-100	MS21919WDG10	.CLAMP		4
-101	MS21919WDG11	.CLAMP		1
-102	MS21919WDG12	.CLAMP		5
-103	MS21919WDG15	.CLAMP		1
-104	MS21919WDG16	.CLAMP		1
-105	MS21919WDG24	.CLAMP		1
-106	MS35207-263	.SCREW		1
-107	MS35207-269	.SCREW		3
-108	MS35207-270	.SCREW		2
-109	MS35207-274	.SCREW		1
-110	NAS43DD-3-12	.SPACER		1
-111	NAS43DD-3-64	.SPACER		6
	NAS1149F0332P	.WASHER		7
	MS21042-3	.NUT		1
-112	MS21919WDG11	.CLAMP		1
-113	NAS43DD-3-16	.SPACER		1
-114	MS35206-246	.SCREW		1
	NAS1149FN816P	.WASHER		1
-115	MS21919WDG10	.CLAMP		2
-116	MS21919WDG13	.CLAMP		4
-117	MS35206-245	.SCREW		6
	NAS1149FN816P	.WASHER		12
	MS21042-08	.NUT		6
-118	MS21266-2	.GROMMET		AR
-119	MS35489-6	.GROMMET		3
-120	MS35489-15	.GROMMET		2
-121	MS21919WDG3	.CLAMP		6
-122	MS21919WDG4	.CLAMP		4
-123	MS21919WDG5	.CLAMP		2

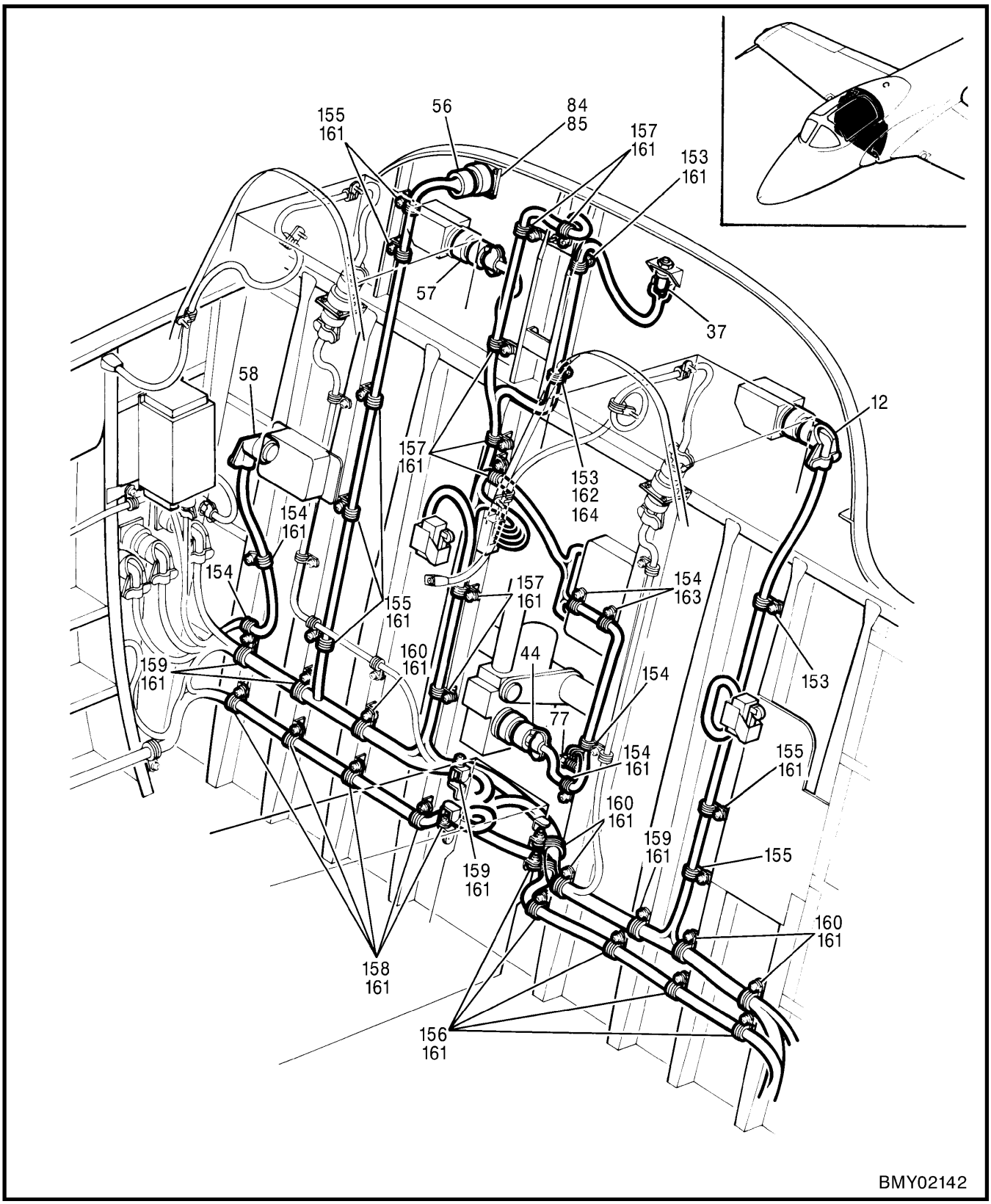

Figure 2-12-17 (Sheet 5 of 5) Cockpit Electrical Harnesses

FIGURE AND INDEX NUMBER	GROUP ELECTRICAL EQUIPMENT MAJOR ASSEMBLY COCKPIT ELECTRICAL HARNESSES PART NUMBER	1 2 3 4 5 6 7 NOMENCLATURE	EFFEC-TIVITY	UNITS PER ASSY
2-12-17 -124	MS35206-245	.SCREW		6
	NAS1149FN816P	.WASHER		12
	MS21042-08	.NUT		6
-125	MS21919WDG4	.CLAMP		2
-126	MS35206-246	.SCREW		2
-127	NAS43DD-3-24	.SPACER		2
	NAS1149FN816P	.WASHER		4
	MS21042-08	.NUT		2
-128	MS35206-215	.SCREW		4
	NAS1149FN416P	.WASHER		4
	MS21042-04	.NUT		4
-129	MS21919WDG2	.CLAMP		3
-130	MS35206-245	.SCREW		2
-131	MS35206-246	.SCREW		1
	NAS1149FN816P	.WASHER		3
	MS21042-08	.NUT		1
-132	MS21919WDG8	.CLAMP		2
-133	MS21919WDG10	.CLAMP		4
-134	MS21919WDG11	.CLAMP		7
-135	MS21919WDG12	.CLAMP		2
-136	MS21919WDG13	.CLAMP		1
-137	MS21919WDG15	.CLAMP		1
-138	MS21919WDG18	.CLAMP		4
-139	MS35206-230	.SCREW		17
-140	MS35206-248	.SCREW		4
-141	NAS43DD-3-24	.SPACER		4
	NAS1149FN816P	.WASHER		33
	MS21042-08	.NUT		13
	RM52LHA4972-6-82	.NUT - CLIP (V72962)		2
-142	MS21266-2	.GROMMET		AR
-143	MS21919WDG2	.CLAMP		9
-144	MS21919WDG3	.CLAMP		1
-145	MS21919WDG6	.CLAMP		1
-146	MS21919WDG7	.CLAMP		1
-147	MS21919WDG10	.CLAMP		2
-148	MS21919WDG11	.CLAMP		4
-149	MS35206-245	.SCREW		18
	NAS1149FN816P	.WASHER		33
	MS21042-08	.NUT		16
-150	MS21266-2	.GROMMET		AR
-151	MS35206-215	.SCREW		4
	NAS1149FN416P	.WASHER		8
	MS21042-04	.NUT		4
-152	MS35489-15	.GROMMET		1
-153	MS21919WDG2	.CLAMP		3
-154	MS21919WDG3	.CLAMP		6
-155	MS21919WDG4	.CLAMP		7
-156	MS21919WDG5	.CLAMP		5
-157	MS21919WDG6	.CLAMP		7
-158	MS21919WDG7	.CLAMP		5
-159	MS21919WDG10	.CLAMP		4
-160	MS21919WDG11	.CLAMP		5
-161	MS35206-245	.SCREW		34
-162	MS35206-248	.SCREW		1
-163	MS35207-263	.SCREW		2
-164	NAS43DD-3-16	.SPACER		1
	NAS1149FN816P	.WASHER		72
	NAS1149F0332P	.WASHER		2
	MS21042-6	.NUT		35
		-000-		

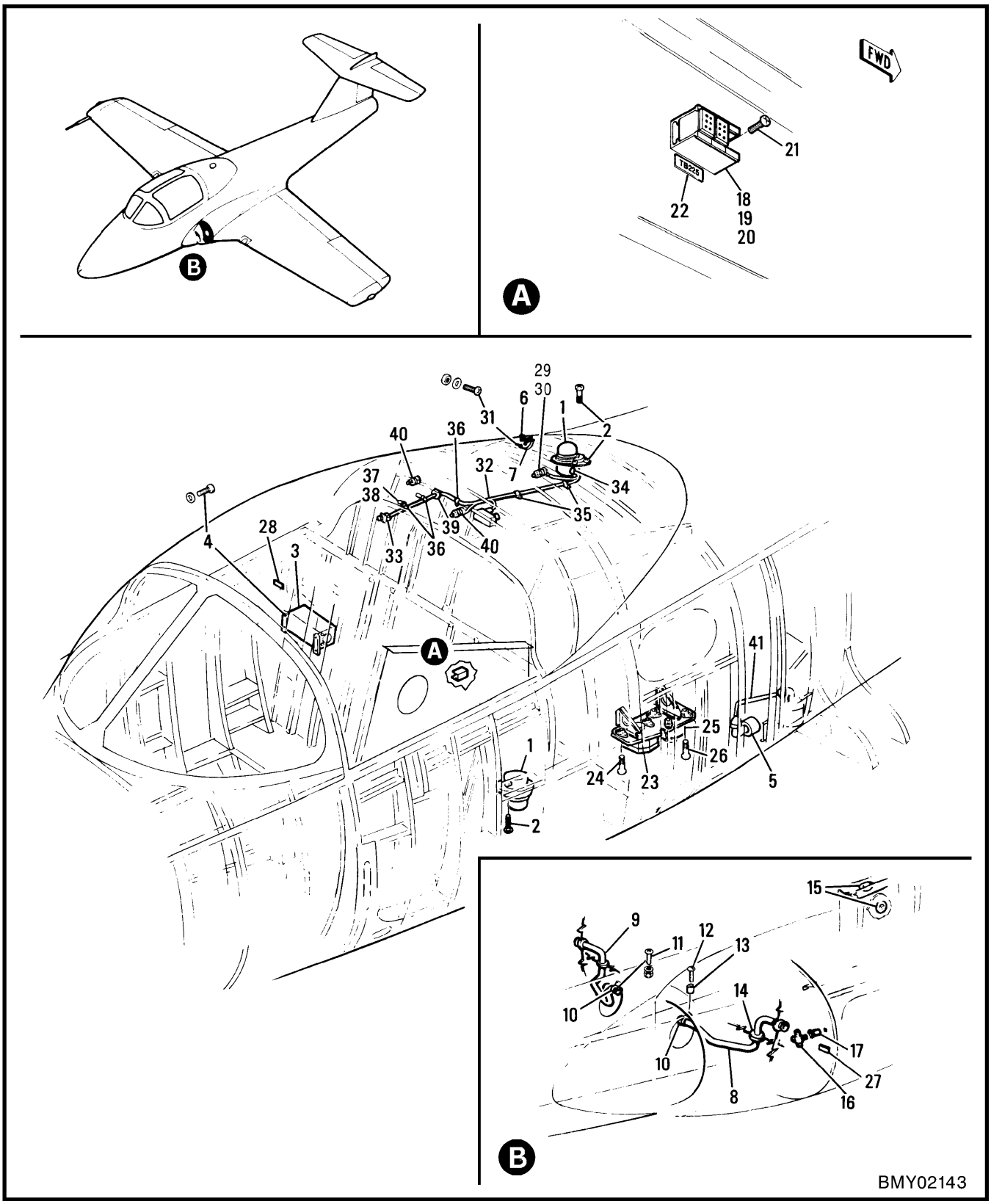

Figure 2-12-18 Centre Fuselage Electrical Equipment

FIGURE AND INDEX NUMBER	GROUP ELECTRICAL EQUIPMENT MAJOR ASSEMBLY CENTRE FUSELAGE ELECTRICAL EQUIPMENT PART NUMBER		1 2 3 4 5 6 7 NOMENCLATURE	EFFEC-TIVITY	UNITS PER ASSY
2-12-18 -	41A-42101		ELECTRICAL & ELEK EQUIP INSTL - CENTRE FUS (MOD BY C-12-114-000/CD-004) (MODIFIED BY 41A-90970-1, 41A-90974-1, NW4528080-1, NW4528200-3 & NW4528142-1) (SEE SECTION 3)		NP
	41A-43012		.TROUGH INSTL - FUS HARNESS (SEE FIG. 2-12-8)		REF
	41A-43014		.HARNESS INSTL - PORT WING FILLET (SEE FIG. 2-12-20)		REF
	41A-43015		.HARNESS INSTL - STBD WING FILLET (SEE FIG. 2-12-20)		REF
- 1	G8400A8-24		.LIGHT ASSY - (V72914) (ANTICOLLISION) FOR BRKDN SEE C-17-457-000/MS-000		2
	28-52944-2		.GASKET		2
- 2	MS35206-230		.SCREW		10
- 3	C75506		.SIGNAL SUMMING UNIT - (V83326) (Z1FD) (IAW 41A-50700-4) FOR BRKDN SEE C-17-962-003/MS-000		1
- 4	NAS1096-3-10		.SCREW		4
	AN960D10L		.WASHER		4
- 5	21SN41-105	*	.SWITCH - (V02750) (FUEL LOW PRESSURE)		1
	AN960PD10L		.WASHER		2
	MS21042L3		.NUT		2
- 6	MS90298-2		.RECEPTACLE - (FUEL NOZZLE GROUND)		1
- 7	41A-42101-33		.JUMPER		1
	MS21042L3		.NUT		1
	41A-42141		.FUEL QUANTITY SYS INSTL		NP
- 8	41A-42143		..CONDUIT - FUEL QUANTITY SYS (LH)		1
- 9	41A-42144		..CONDUIT - FUEL QUANTITY SYS (RH)		1
-10	316-12-8		..CLIP - (V00502)		2
-11	MS35207-262		..SCREW		1
-12	MS35207-268		..SCREW		1
-13	NAS43DD3-48		..SPACER		1
	AN960PD10L		..WASHER		2
	MS21042L3		..NUT		2
-14	MS35489-20		..GROMMET		4
-15	MS35489-6		..GROMMET		2
-16	5335-1	**	..TEE CONNECTOR - (V60674)		1
	MS35206-217	**	..SCREW		2
	MS15795-804	**	..WASHER		2
	MS21044N04	**	..NUT		2
-17	2602-832		..RAWLPLUG - (V35993)		1
	41A-90970-1		TERMINAL BOARD INSTL - FUSELAGE TROUGH (SEE FIG. 2-12-2)		NP
-18	M81714/60-16-03		.TERMINAL BLOCK		1
-19	M81714/60-20-04		.TERMINAL BLOCK		1
	MS27488-20		.PLUG - END SEAL		2
-20	SJT503504		.RACK ASSY - (V58982)		1
-21	MS35207-263		.SCREW		1
-22	41A-90904-182		.LABEL - (TB225)		1
	41A-90974-1		EQUIPMENT INSTL - GROUND POWER & GENERATOR REVERSING CURRENT (SEE FIG. 2-12-2)		NP
-23	AJ-A4N-176		.RELAY - (V35344) (K2P) (GROUND POWER)		1
-24	MS35207-281		.SCREW		2
	AN960KD416L		.WASHER		2
	41A-90904-194		.LABEL - (K2P)		1
R -25	AN3025-600		.RELAY - (K1P) (GENERATOR REVERSING CURRENT), OR		1
R	A702AP		.RELAY - (K1P) (GENERATOR REVERSING CURRENT)		1
-26	MS35207-282		.SCREW		4
	AN960D10L		.WASHER		4
	41A-90904-192		.LABEL - (K1P)		1
		*	IAW C-12-114-000/CF-505		
		**	IAW C-12-114-000/CF-471		

FIGURE AND INDEX NUMBER	GROUP ELECTRICAL EQUIPMENT MAJOR ASSEMBLY CENTRE FUSELAGE ELECTRICAL EQUIPMENT PART NUMBER	1 2 3 4 5 6 7 NOMENCLATURE	EFFEC-TIVITY	UNITS PER ASSY
2-12-18 -	NW4528080-1	EQUIPMENT INSTL - DUCT FAIRING (LH) (SEE FIG. 2-12-2)		NP
-27	41A-90904-166	.LABEL - (J201)		1
	NW4528080-2	EQUIPMENT INSTL - DUCT FAIRING (RH) (SEE FIG. 2-12-18)		NP
-28	41A-90904-168	.LABEL - (J202)		1
	NW4528142-1	JUMPER INSTL - BONDING (SEE FIG. 2-12-2)		REF
-29	M83413/8-A06AB	.JUMPER ASSY		1
	M23053/5-104-9	.SLEEVING - INSULATION		1
-30	MS35207-262	.SCREW		1
	AN960JD10L	.WASHER		2
	AN960-10L	.WASHER		1
	MS35338-43	.WASHER - LOCK		1
	MS21042L3	.NUT		1
-31	MS35207-265	.SCREW		1
	AN960JD10L	.WASHER		3
	MS35338-43	.WASHER		1
	MS21042L3	.NUT		1
	NW4528200-3	WIRING INSTL - CANOPY (SEE FIG. 2-12-16)		REF
-32	NW4528417-1	.CABLE ASSY - CANOPY FAIRING		1
-33	MS3476L16-8P	..CONNECTOR - (P31) (CANTED BULKHEAD) (FS 217)		1
	M85049/52-S-16N	..BACKSHELL		1
-34	MS3456L10SL-3S	..CONNECTOR - (P9L) (UPPER ANTICOLLISION LT)		1
	M85049/52-S-10N	..BACKSHELL		1
-35	MS21919WDG3	.CLAMP		2
-36	MS21919WDG4	.CLAMP		3
-37	MS35206-245	.SCREW		5
-38	NAS43DD-3-40	.SPACER		1
	NAS1149FN816P	.WASHER		9
	MS21042-08	.NUT		6
-39	MS35489-12	.GROMMET		1
-40	MS35207-265	.SCREW - GROUND PLUG (N42 & N48)		2
	NAS1149D0363H	.WASHER		4
	MS35338-43	.WASHER		2
	NAS1149F0332P	.WASHER		4
	MS35650-302	.NUT		2
	MS21042-3	.NUT		2
-41	AE7010000E0120	HOSE ASSY - (FUEL STRAINER TO LOW PRESSURE SWITCH) (SEE SECTION 6)		REF

-000-

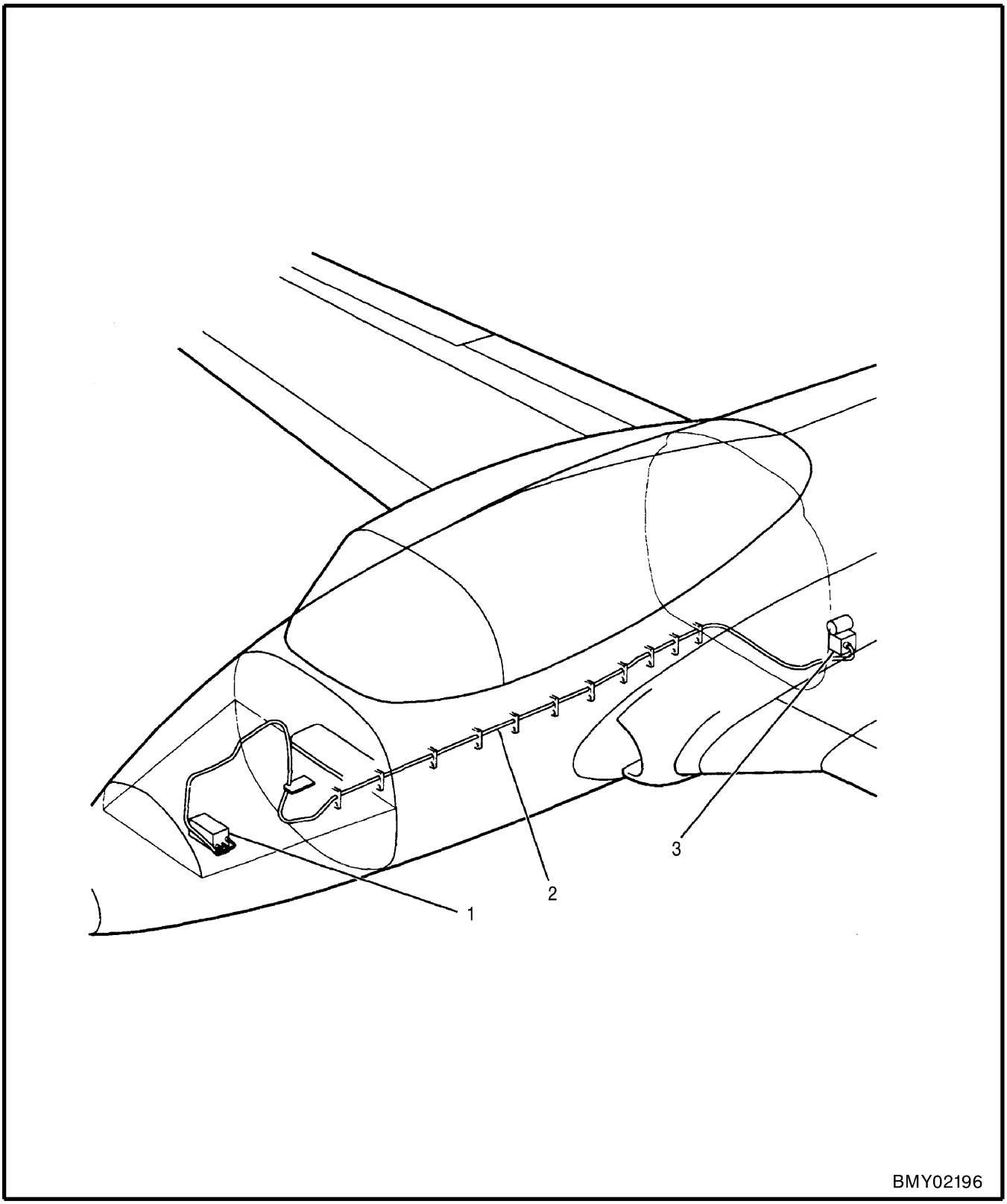

Figure 2-12-19 Forward Fuselage Instrument Equipment (Load Monitoring System)

FIGURE AND INDEX NUMBER	GROUP ELECTRICAL EQUIPMENT MAJOR ASSEMBLY FORWARD FUSELAGE INSTRUMENT EQUIPMENT (LOAD MONITORING SYSTEM)		EFFEC-TIVITY	UNITS PER ASSY
	PART NUMBER	1 2 3 4 5 6 7 NOMENCLATURE		
2-12-19 -1	B529	DATA ACQUISITION UNIT (SEE FIG. 2-12-4)		REF
R -2	CAE9522087-1	CABLE ASSY		1
-3	B530	NZ AND ROLL RATE TRANSDUCER		REF
		-000-		

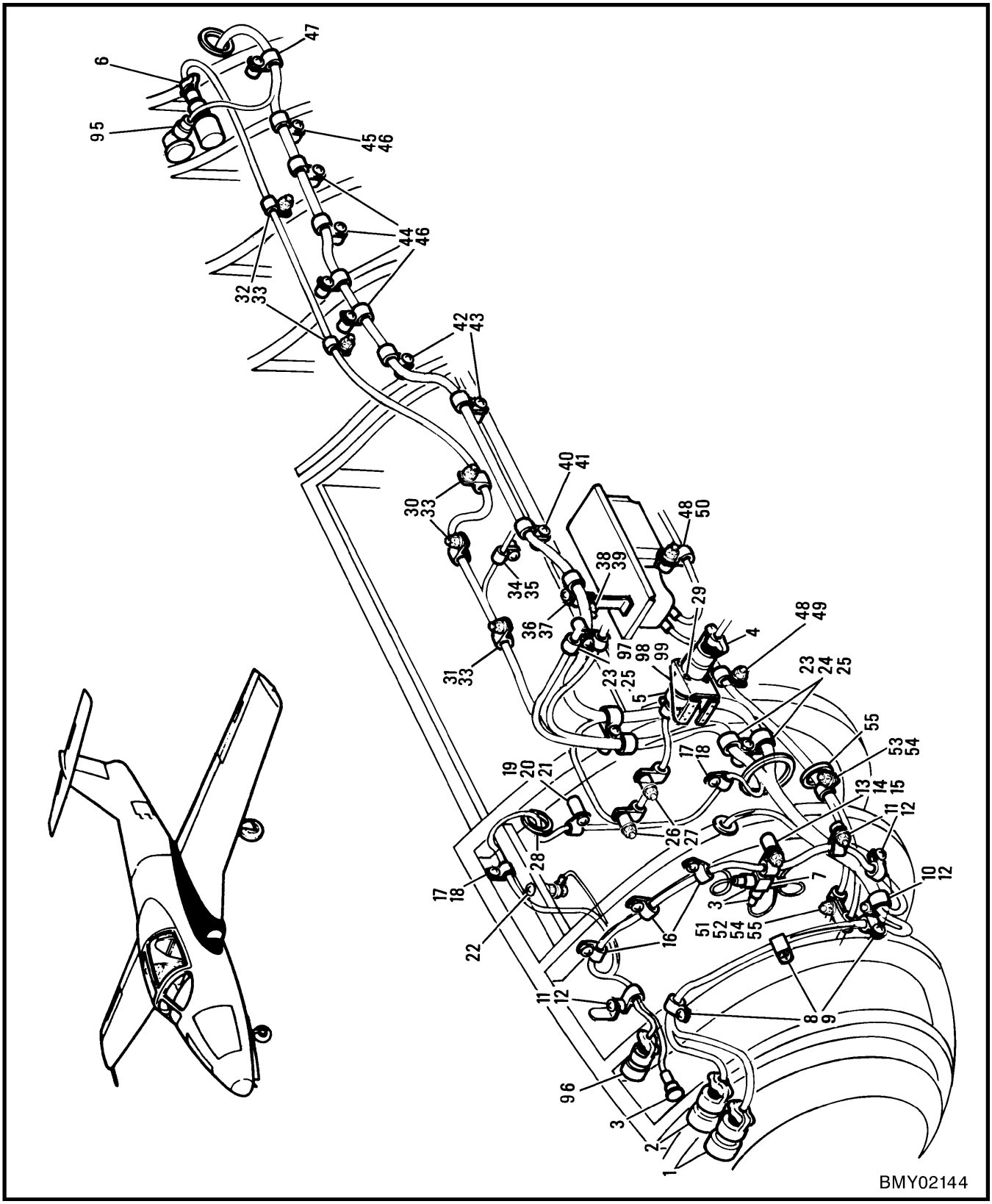

Figure 2-12-20 (Sheet 1 of 2) Wing Fillet Electrical Harness

FIGURE AND INDEX NUMBER	GROUP ELECTRICAL EQUIPMENT MAJOR ASSEMBLY WING FILLET ELECTRICAL HARNESS PART NUMBER	1 2 3 4 5 6 7 NOMENCLATURE	EFFEC-TIVITY	UNITS PER ASSY
2-12-20 -	NW4528200-4	WIRING INSTL - LH WING FILLET (SEE FIG. 2-12-2)		NP
	NW4528400-1	.HARNESS ASSY - LH WING		1
- 1	MS3476L20-39P	..CONNECTOR - (P39)		1
	M85049/52-S-20N	..BACKSHELL		1
- 2	MS3476L22-21P	..CONNECTOR - (P37)		1
	M85049/52-S-22N	..BACKSHELL		1
- 3	20P228-6	..CONNECTOR - (V24931) (P33, P4DC, P5DC & P7DC)		4
- 4	MS3476L22-21P	..CONNECTOR - (P201)		1
	M85049/52-S-22N	..BACKSHELL		1
- 5	MS3470L22-21S	..CONNECTOR - (J201)		1
	M85049/52-S-22N	..BACKSHELL		1
- 6	MS3456L14S-2S	..CONNECTOR - (P2DA)		1
	M85049/52-S-14N	..BACKSHELL		1
- 7	5335-1	.CONNECTOR - (V60674) (J2DC)		1
- 8	MS21919WDG11	.CLAMP		3
- 9	MS35206-247	.SCREW		3
	NAS1149F0332	.WASHER		7
	MS35338-42	.WASHER		3
	MS35649-282	.NUT		3
	MS21042-08	.NUT		3
-10	MS21919WDG8	.CLAMP		1
-11	MS21919WDG4	.CLAMP		3
-12	MS35206-247	.SCREW		4
	NAS1149FN816P	.WASHER		12
	MS35338-42	.WASHER		4
	MS35649-282	.NUT		4
	MS21042-06	.NUT		4
-13	MS21919WDG3	.CLAMP		1
-14	MS35206-249	.SCREW		1
-15	NAS43DD-3-24	.SPACER		1
	NAS1149FN816P	.WASHER		3
	MS35338-42	.WASHER		1
	MS35649-282	.NUT		1
	MS21042-06	.NUT		1
-16	MS21919WDG4	.CLAMP		3
	MS35206-245	.SCREW		3
	NAS1149FN816P	.WASHER		6
	MS21048-08	.NUT		3
-17	MS21919WDG2	.CLAMP		2
-18	MS35206-245	.SCREW		2
	NAS1149FN816P	.WASHER		2
	MS21042-08	.NUT		2
-19	MS21919WDG2	.CLAMP		1
-20	MS35206-250	.SCREW		1
-21	NAS43DD-3-48	.SPACER		1
	NAS1149FN816P	.WASHER		1
	MS21042-08	.NUT		1
-22	MS35207-265	.SCREW - GROUND STUD (N213)		1
	NAS1149D0363H	.WASHER		2
	MS35338-43	.WASHER		1
	NAS1149F0332P	.WASHER		2
	MS35650-302	.NUT		1
	MS21042-3	.NUT		1
-23	MS21919WDG9	.CLAMP		3
-24	MS21919WDG12	.CLAMP		1
-25	MS35206-251	.SCREW		2
	NAS43DD-3-64	.WASHER		2
	NAS1149FN816P	.WASHER		2
-26	MS21919WDG4	.CLAMP		4

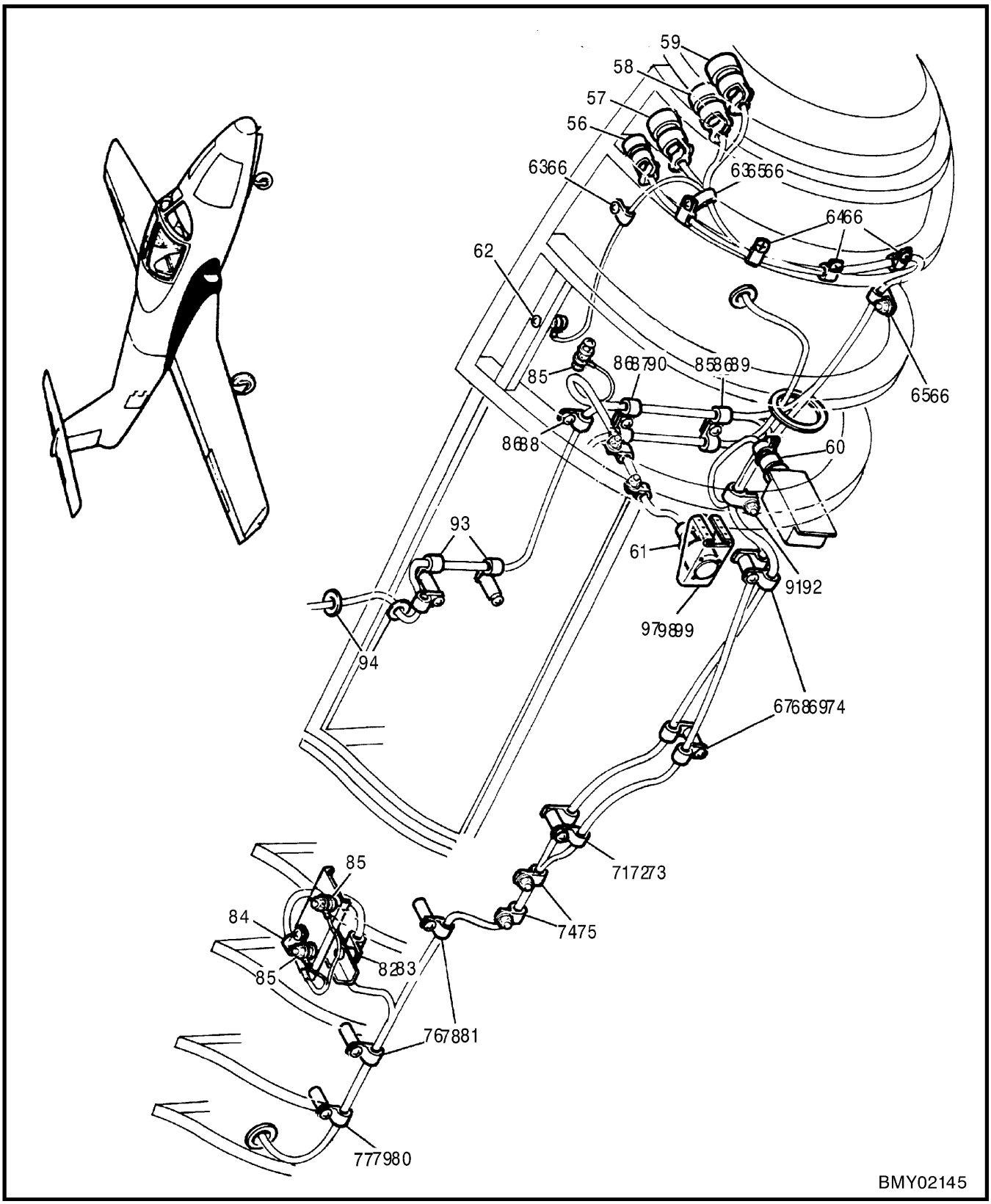

Figure 2-12-20 (Sheet 2 of 2) Wing Fillet Electrical Harness

FIGURE AND INDEX NUMBER	GROUP ELECTRICAL EQUIPMENT MAJOR ASSEMBLY WING FILLET ELECTRICAL HARNESS PART NUMBER	1 2 3 4 5 6 7 NOMENCLATURE	EFFEC-TIVITY	UNITS PER ASSY
2-12-20 -27	MS35206-249	.SCREW		3
	NAS43DD-3-32	.SPACER		3
	NAS1149FN816P	.WASHER		5
	MS21042-08	.NUT		2
-28	MS21266-2	.GROMMET		AR
-29	MS35206-215	.SCREW		4
	NAS1149FN416P	.WASHER		4
-30	MS21919WDG8	.CLAMP		2
-31	MS21919WDG9	.CLAMP		1
-32	MS21919WDG3	.CLAMP		2
-33	MS35206-245	.SCREW		5
	NAS1149FN816P	.WASHER		10
	MS21042-08	.NUT		5
-34	MS21919WDG3	.CLAMP		1
-35	MS35206-247	.SCREW		1
	NAS43DD-3-16	.SPACER		1
	NAS1149FN816P	.WASHER		2
	MS21042-08	.NUT		1
-36	MS21919WDG9	.CLAMP		1
-37	MS35206-246	.SCREW		1
	NAS1149FN816P	.WASHER		2
	MS21042-08	.NUT		1
-38	AN743-13	.BRACKET		1
-39	MS35206-245	.SCREW		1
	NAS1149FN816P	.WASHER		2
	MS21042-08	.NUT		1
-40	MS21919WDG9	.CLAMP		1
-41	MS35206-247	.SCREW		1
	NAS43DD-3-12	.SPACER		1
	NAS1149FN816P	.WASHER		1
-42	MS21919WDG9	.CLAMP		2
-43	MS35206-250	.SCREW		2
	NAS43DD-48	.SPACER		2
	NAS1149FN816P	.WASHER		2
-44	MS21919WDG9	.CLAMP		4
-45	MS21919WDG7	.CLAMP		1
-46	MS35206-245	.SCREW		5
	NAS1149FN816P	.WASHER		5
-47	MS21919WDG7	.CLAMP		1
	MS35206-249	.SCREW		1
	NAS43DD-3-32	.SPACER		1
	NAS1149FN816P	.WASHER		1
-48	MS21919WDG13	.CLAMP		2
-49	MS35206-332	.SCREW		1
-50	MS35206-231	.SCREW		1
	NAS43DD-3-16	.SPACER		1
	NAS43DD-3-48	.SPACER		1
	NAS1149FN816P	.WASHER		6
	MS35338-42	.WASHER		2
	MS35649-282	.NUT		2
	MS21042-08	.NUT		2
-51	MS21919WDG8	.CLAMP		1
-52	MS21919WDG9	.CLAMP		1
-53	MS21919WDG13	.CLAMP		1
-54	MS35206-245	.SCREW		2
	NAS1149FN816P	.WASHER		4
	MS21042-08	.NUT		2
-55	MS21266-2	.GROMMET		AR

FIGURE AND INDEX NUMBER	GROUP ELECTRICAL EQUIPMENT MAJOR ASSEMBLY WING FILLET ELECTRICAL HARNESS PART NUMBER	1 2 3 4 5 6 7 NOMENCLATURE	EFFEC-TIVITY	UNITS PER ASSY
2-12-20 -	NW4528200-6	WIRING INSTL - RH WING FILLET (SEE FIG. 2-12-2)		NP
	NW4528400-1	.HARNESS ASSY - RH WING		1
-56	MS3476L12-3P	..CONNECTOR - (P34)		1
	M85049/52-S-12N	..BACKSHELL		1
-57	MS3476L20-39P	..CONNECTOR - (P47)		1
	M85049/52-S-20N	..BACKSHELL		1
-58	MS3476L20-16P	..CONNECTOR - (P45)		1
	M85049/52-S-20N	..BACKSHELL		1
-59	MS3476L22-21P	..CONNECTOR - (P43)		1
	M85049/51-S-22N	..BACKSHELL		1
-60	MS3476L16-26S	..CONNECTOR - (P1FD)		1
	M85049/52-S-16N	..BACKSHELL		1
-61	MS3470L22-21S	..CONNECTOR - (J202)		1
	M85049/52-S-22N	..BACKSHELL		1
-62	MS35207-265	.SCREW - GROUND STUD (N214)		1
	NAS1149F0332P	.WASHER		2
	NAS1149D0363H	.WASHER		2
	MS35338-43	.WASHER		1
	MS35650-302	.NUT		1
	MS21042-3	.NUT		1
-63	MS21919WDG4	.CLAMP		4
-64	MS21919WDG10	.CLAMP		4
-65	MS21919WDG12	.CLAMP		1
-66	MS35206-247	.SCREW		5
	NAS1149FN816P	.WASHER		18
	MS35338-42	.WASHER		5
	MS35649-282	.NUT		5
	MS21042-08	.NUT		5
-67	MS21919WDG8	.CLAMP		2
-68	MS21919WDG10	.CLAMP		2
-69	NAS43DD-3-48	.SPACER		2
-70	MS35206-250	.SCREW		2
	NAS1149FN816P	.WASHER		2
-71	MS21919WDG8	.CLAMP		1
-72	MS21919WDG10	.CLAMP		1
-73	MS35206-249	.SCREW		1
	NAS43DD-3-48	.SPACER		1
	NAS1149FN816P	.WASHER		1
-74	MS21919WDG8	.CLAMP		2
-75	MS35206-245	.SCREW		2
	NAS1149FN816P	.WASHER		4
	MS21042-08	.NUT		2
-76	MS21919WDG9	.CLAMP		2
-77	MS21919WDG10	.CLAMP		1
-78	MS35206-332	.SCREW		2
-79	MS35206-249	.SCREW		1
-80	NAS43DD-3-28	.SPACER		1
-81	NAS43DD-3-48	.SPACER		2
	NAS1149FN616P	.WASHER		2
-82	MS21919WDG7	.CLAMP		1
-83	MS35206-247	.SCREW		1
	NAS1149FN816P	.WASHER		3
	MS35338-42	.WASHER		1
	MS35649-282	.NUT		1
	MS21042-08	.NUT		1

FIGURE AND INDEX NUMBER	GROUP ELECTRICAL EQUIPMENT MAJOR ASSEMBLY WING FILLET ELECTRICAL HARNESS PART NUMBER	1 2 3 4 5 6 7 NOMENCLATURE	EFFEC-TIVITY	UNITS PER ASSY
2-12-20 -84	MS21919WDG8	.CLAMP		1
-85	MS35207-265	.SCREW - GROUND STUD (N68, N69 & N78)		3
	NAS1149F0332P	.WASHER		6
	NAS1149D0363H	.WASHER		6
	MS35338-43	.WASHER		3
	MS35650-302	.NUT		3
	MS21042-3	.NUT		3
-86	MS21919WDG4	.CLAMP		3
-87	MS21919WDG8	.CLAMP		2
-88	MS35206-245	.SCREW		1
-89	MS35206-249	.SCREW		1
-90	MS35206-250	.SCREW		1
	NAS43DD-3-32	.SPACER		1
	NAS43DD-3-48	.SPACER		1
	NAS1149FN816P	.WASHER		3
-91	MS21919WDG12	.CLAMP		1
-92	MS35206-245	.SCREW		1
	NAS1149FN816P	.WASHER		1
-93	MS21919WDG4	.CLAMP		2
-94	MS35489-9	.GROMMET		2
-95	MS3126F8-3S	.CONNECTOR - (P3FD)		1
	NW4528200-5	WIRING INSTL - LH WING (SEE FIG. 2-12-2)		REF
	NW4528414-1	.CABLE ASSY - (SEE FIG. 2-12-24)		REF
-96	MS3476L10-6P	..CONNECTOR - (P41)		1
	M85049/52-S-10N	..BACKSHELL		1
	NW4528080-1	EQUIPMENT INSTL - LH DUCT FAIRING		NP
	NW4528080-2	EQUIPMENT INSTL - RH DUCT FAIRING		NP
-97	NW4528079-1	.BRACKET		1
-98	MS21075-4	..NUTPLATE		4
-99	MS20426AD3-3	..RIVET		8

-000-

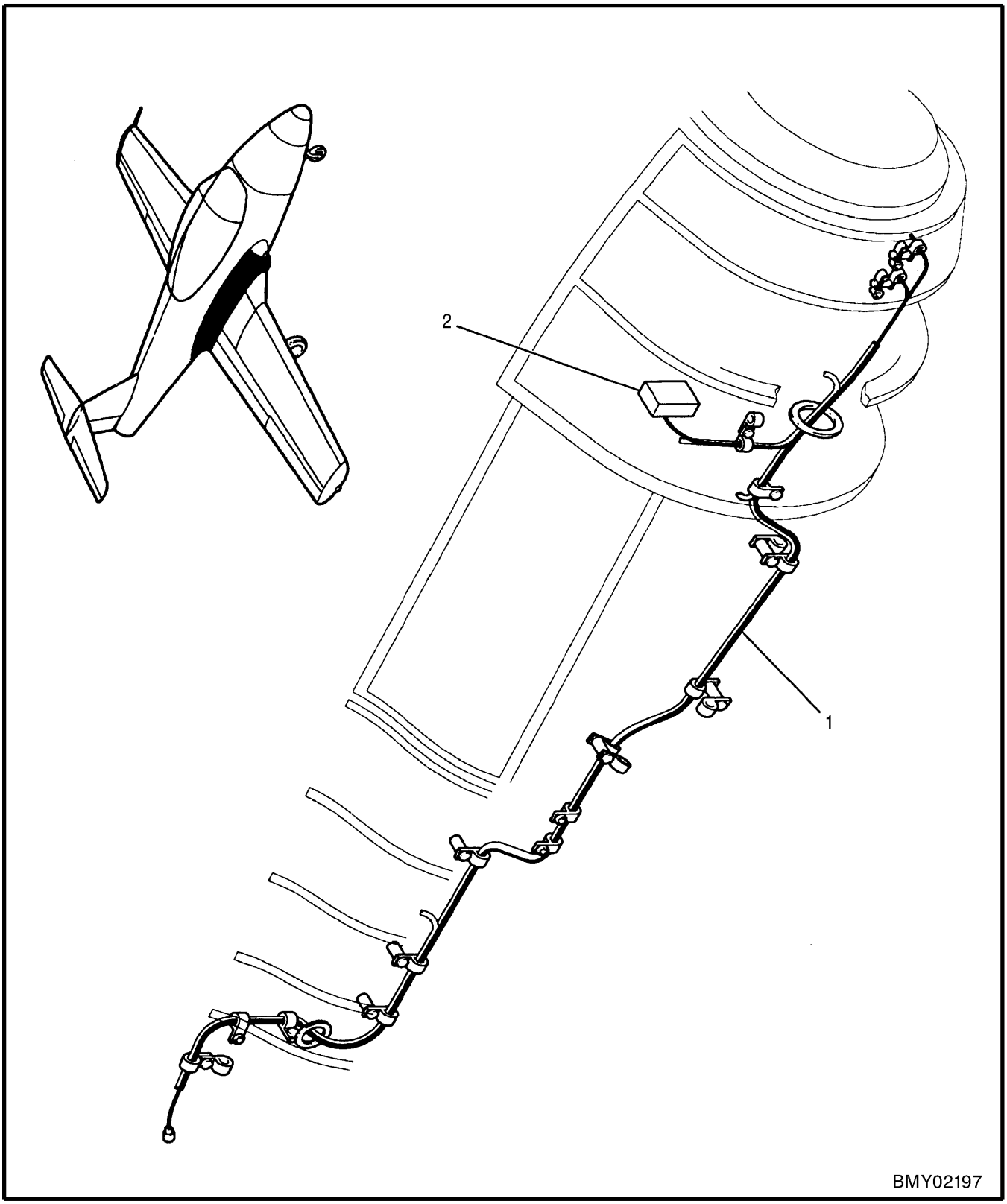

Figure 2-12-21 Wing Fillet Electrical Harness (Load Monitoring System)

FIGURE AND INDEX NUMBER	GROUP ELECTRICAL EQUIPMENT MAJOR ASSEMBLY WING FILLET ELECTRICAL HARNESS (LOAD MONITORING SYSTEM)		EFFEC-TIVITY	UNITS PER ASSY
	PART NUMBER	1 2 3 4 5 6 7 NOMENCLATURE		
2-12-21 -1	NW452902-1	CABLE ASSY		1
-2	B531	PRESSURE TRANSDUCER MODULE		1
		-000-		

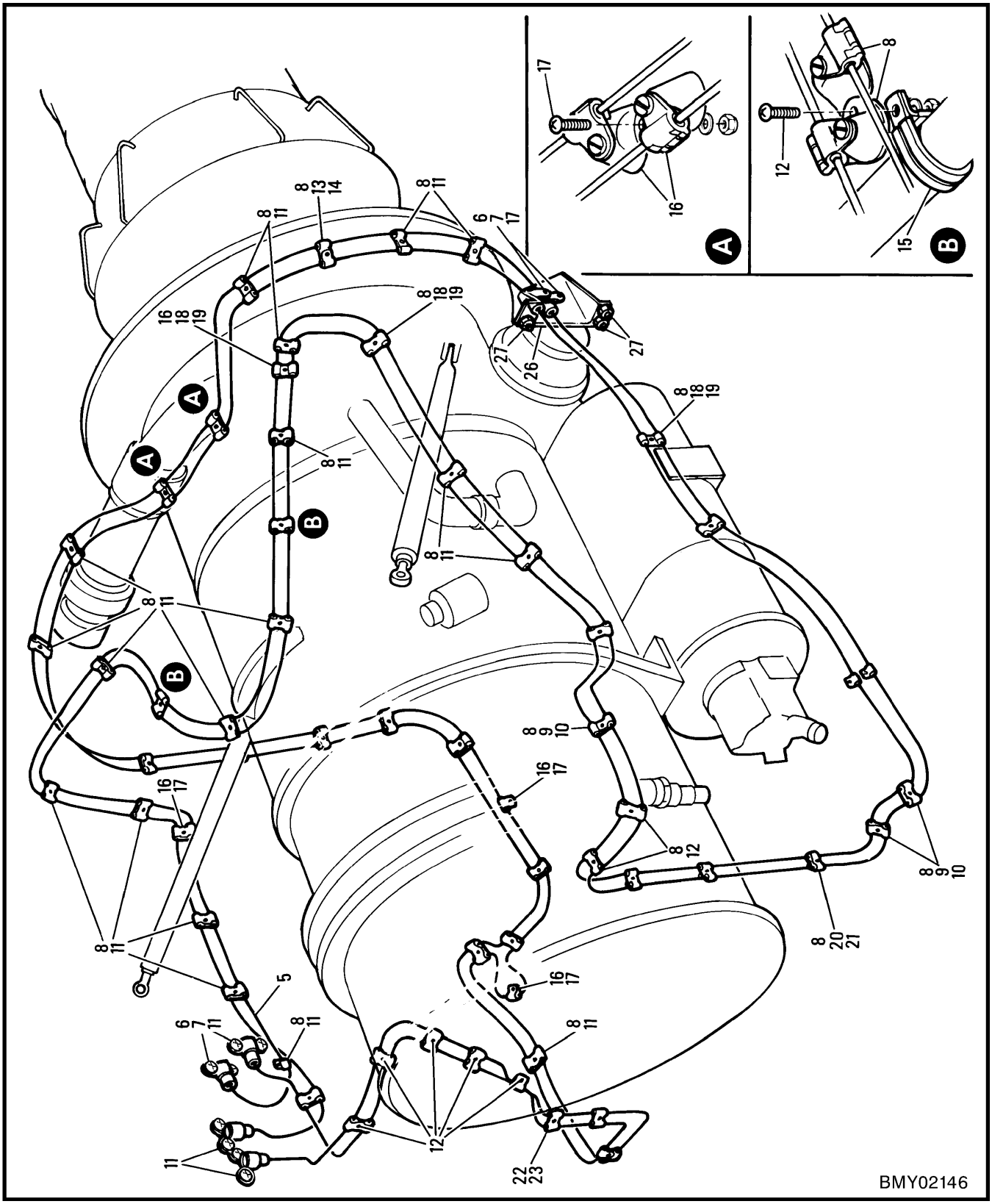

Figure 2-12-22 (Sheet 1 of 2) Power Plant Electrical Equipment

FIGURE AND INDEX NUMBER	GROUP ELECTRICAL EQUIPMENT MAJOR ASSEMBLY POWER PLANT ELECTRICAL EQUIPMENT PART NUMBER		1 2 3 4 5 6 7 NOMENCLATURE	EFFEC-TIVITY	UNITS PER ASSY
2-12-22 -	41A-42105		ELECTRICAL EQUIP. INSTL -POWER PLANT (IAW C-12-114-000/CD-004 & CD-019) (MODIFIED BY NW4528200-9, NW4528400-1 & NW4528405-1) (SEE SECTION 3)		NP
	41A-42156		.RECEPTACLE INSTL - GROUND POWER		NP
- 1	MS24693-274		..SCREW		2
	41A-42129		.RELAY INSTL - SYSTEM SHUT OFF & DEICE		NP
	41A-42129-2		..RELAY ASSY - SYSTEM SHUT OFF & DEICE (IAW C-12-114-000/CF-369)		1
- 2	8300/300		.SHUNT - (V91812) (R1P) (TYPE MSB30/1)		1
- 3	NAS623-3-6		.SCREW		2
	AN960D10		.WASHER		2
	MS21042L3		.NUT		2
- 4	41A-42160		.BUS - AMMETER SHUNT		2
	41A-42117		.FIRE DETECTOR SYS INSTL - ZONE 1		NP
- 5	24418082		..CABLE ASSY - (V80099) (FIRE DETECTOR)		4
- 6	23693		..BRACKET - (V80099)		6
	22922		..NUT - (V80099)		4
- 7	22922		..NUT - (V80099)		6
- 8	7C11-4		..CLAMP - (V71286)		99
- 9	MS35206-248		..SCREW		3
-10	NAS43DD3-24		..SPACER		4
-11	MS35206-245		..SCREW		43
	AN960-8		..WASHER		46
	MS21042L08		..NUT		39
-12	MS35207-263		..SCREW		11
	AN960-10		..WASHER		11
-13	NO NUMBER	*	..STOP - FIRE DETECTION CABLE PROTECTION		2
-14	MS35206-248	*	..SCREW		2
-15	MS21919WH16		..CLAMP		2
	MS21042L3		..NUT		2
-16	7C11-4		..CLAMP - (V71286)		10
-17	MS35206-245		..SCREW		4
-18	MS35206-248		..SCREW		4
-19	NAS43DD3-24		..SPACER		3
	AN960-10		..WASHER		3
	AN960-8		..WASHER		3
-20	MS35207-265		..SCREW		1
-21	NAS43DD3-16		..SPACER		1
-22	MS35207-268		..SCREW		1
-23	NAS43DD3-48		..SPACER		1
-24	NAS1106-6		..BOLT		2
	AN960-616		..WASHER		2
	MS21042L6		..NUT		2
	41A-35004		FUSELAGE GENL ASSY - CENTRE (SEE SECTION 3)		REF
	41A-35102-2		.SUPPORT INSTL - ENGINE MAIN ACCESS DOOR LH		NP
-25	MS25080-5		..STUD - (N37 & N38 GROUND)		2
	AN960-616L		..WASHER		6
	MS21042L6		..NUT		2
	41A-42172		.PLATE INSTL - FIRE DETECTOR MTG (FS 300-308)		NP
-26	41A-42172-2		..PLATE - FIRE DETECTOR MTG		1
-27	MS35206-242		..SCREW		4
	AN960PD8L		..WASHER		4
	MS21042L08		..NUT		4
		*	IAW C-12-114-000/CF-332		

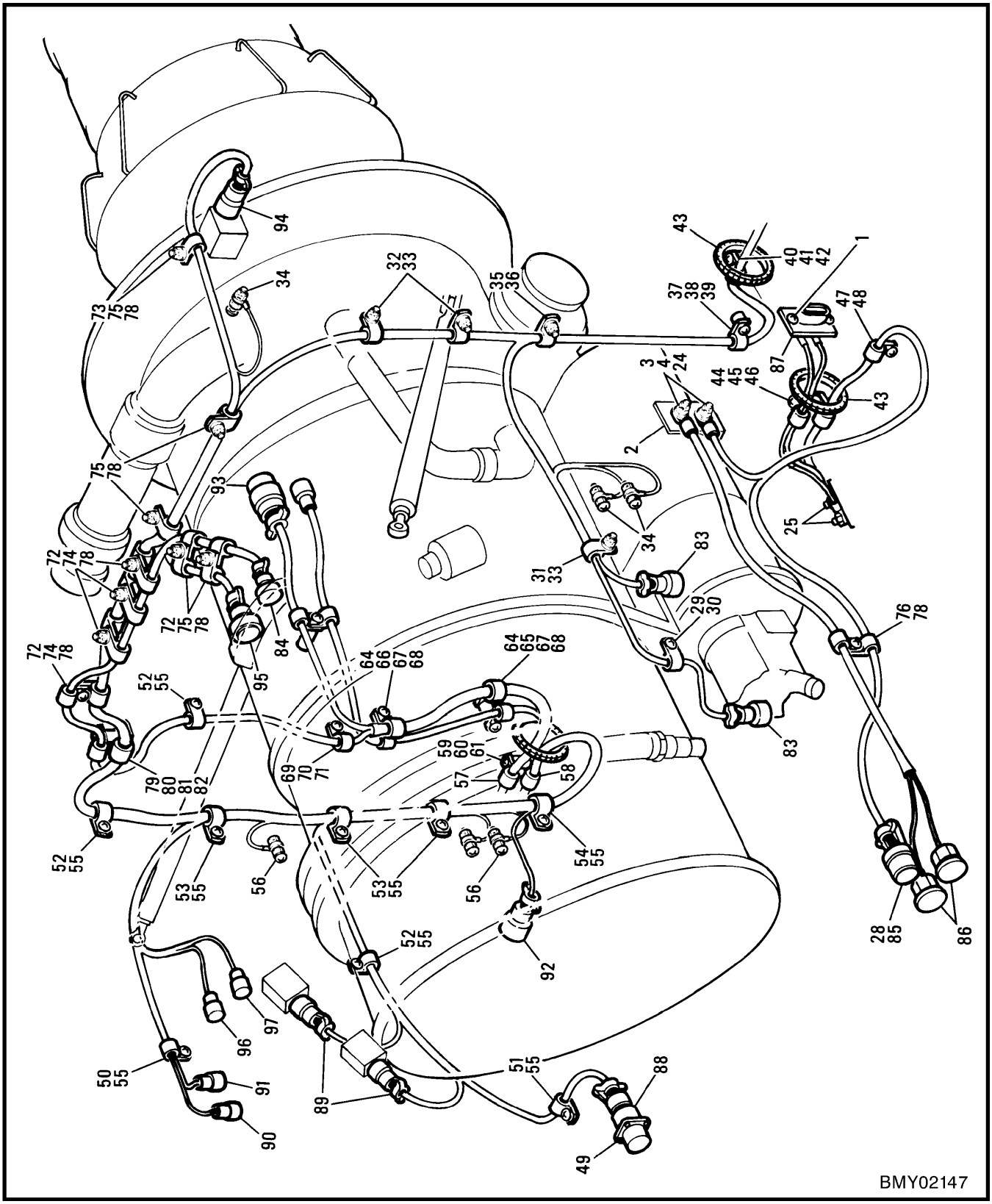

Figure 2-12-22 (Sheet 2 of 2) Power Plant Electrical Equipment

FIGURE AND INDEX NUMBER	GROUP ELECTRICAL EQUIPMENT MAJOR ASSEMBLY POWER PLANT ELECTRICAL EQUIPMENT PART NUMBER	1 2 3 4 5 6 7 NOMENCLATURE	EFFEC-TIVITY	UNITS PER ASSY
2-12-22 -	NW4528200-9	WIRING INSTL - ENGINE COMPARTMENT (SEE FIG. 2-12-2)		NP
-28	MS35206-230	.SCREW		4
	NAS1149FN616P	.WASHER		8
	MS21042-06	.NUT		4
-29	MS21919WCH2	.CLAMP		1
-30	MS35206-248	.SCREW		1
	NAS1149FN816P	.WASHER		3
	MS35338-42	.WASHER		1
	MS35649-282	.NUT		1
	MS21042-08	.NUT		1
-31	MS21919WCH3	.CLAMP		1
-32	MS21919WCH5	.CLAMP		2
-33	MS35206-245	.SCREW		3
	NAS1149FN816P	.WASHER		6
	MS21042-08	.NUT		3
-34	MS35207-265	.SCREW - GROUND STUD (N39, N56, N62 & N79)		4
	NAS1149D0363H	.WASHER		8
	MS35338-43	.WASHER		4
	NAS1149F0332P	.WASHER		8
	MS35650-302	.NUT		4
	MS21042-3	.NUT		4
	1N5551 *	.DIODE (CR7C & CR8C)		2
-35	MS21919WCH6	.CLAMP		1
-36	MS35206-250	.SCREW		1
	NAS1149FN816P	.WASHER		3
	MS35338-42	.WASHER		1
	MS35649-282	.NUT		1
	MS21042-08	.NUT		1
-37	MS21919WDG8	.CLAMP		1
-38	MS35206-250	.SCREW		1
-39	NAS43-3-32	.SPACER		1
	NAS1149FN816P	.WASHER		2
	MS21042-08	.NUT		1
-40	MS21919WCH7	.CLAMP		1
-41	MS35206-249	.SCREW		1
-42	NAS43-3-16	.SPACER		1
	NAS1149FN816P	.WASHER		2
	MS21042-08	.NUT		1
-43	MS21266-2	.GROMMET		AR
-44	MS21919WCH11	.CLAMP		2
-45	MS35206-250	.SCREW		1
-46	NAS43-3-48	.SPACER		1
	NAS1149FN816P	.WASHER		2
	MS21042-08	.NUT		1
-47	MS21919WCH12	.CLAMP		1
-48	MS35206-245	.SCREW		1
	NAS1149FN816P	.WASHER		2
	MS21042-08	.NUT		1
-49	MS35206-217	.SCREW		4
	NAS1149FN816P	.WASHER		4
	MS21042-04	.NUT		4
-50	MS21919WCH2	.CLAMP		1
-51	MS21919WCH4	.CLAMP		1
-52	MS21919WCH5	.CLAMP		3
-53	MS21919WCH6	.CLAMP		3
-54	MS21919WCH7	.CLAMP		1
	*	IAW C-12-114-00/CF-539		

FIGURE AND INDEX NUMBER	GROUP	ELECTRICAL EQUIPMENT	EFFEC-TIVITY	UNITS PER ASSY
	MAJOR ASSEMBLY	POWER PLANT ELECTRICAL EQUIPMENT		
	PART NUMBER	1 2 3 4 5 6 7 NOMENCLATURE		
2-12-22 -55	MS35206-245	.SCREW		9
	NAS1149FN816P	.WASHER		18
	MS21042-08	.NUT		9
-56	MS35207-265	.SCREW - GROUND STUD (N10, N11 & N12)		3
	NAS1149D0363H	.WASHER		6
	MS35338-43	.WASHER		3
	NAS1149F0332P	.WASHER		6
	MS35650-302	.NUT		3
	MS21042-08	.NUT		3
-57	MS21919WCH7	.CLAMP		1
-58	MS21919WCH9	.CLAMP		1
-59	MS35206-251	.SCREW		1
-60	NAS43-3-48	.SPACER		1
-61	NAS43DD-3-16	.SPACER		1
	NAS1149FN816P	.WASHER		2
	MS21042-08	.NUT		1
-62	MS21919WCH5	.CLAMP		1
-63	MS21919WCH6	.CLAMP		1
-64	MS21919WCH7	.CLAMP		2
-65	MS21919WCH9	.CLAMP		1
-66	MS21919WCH12	.CLAMP		1
-67	MS35206-250	.SCREW		3
-68	NAS43-3-48	.SPACER		3
	NAS1149FN816P	.WASHER		6
	MS21042-08	.NUT		3
-69	MS21919WCH5	.CLAMP		1
-70	MS35206-249	.SCREW		1
-71	NAS43-3-32	.SPACER		1
	NAS1149FN816P	.WASHER		1
	MS21042-08	.NUT		1
-72	MS21919WCH3	.CLAMP		7
-73	MS21919WCH4	.CLAMP		1
-74	MS21919WCH5	.CLAMP		4
-75	MS21919WCH6	.CLAMP		4
-76	MS21919WCH11	.CLAMP		1
-77	AN743-12	.BRACKET		1
-78	MS35206-245	.SCREW		11
	NAS1149FN816P	.WASHER		22
	MS21042-08	.NUT		11
-79	MS21919WCH3	.CLAMP		1
-80	MS21919WCH5	.CLAMP		1
-81	MS35206-249	.SCREW		1
-82	NAS43-3-40	.SPACER		1
	NAS1149FN816P	.WASHER		2
	MS21042-08	.NUT		1
	NW4528400-1	HARNESS ASSY - LH WING (SEE FIG. 2-12-20)		REF
-83	MS3476L10-8S	.CONNECTOR - (P12G & P3C) (MAIN L/G & SPEED BRAKE SELECT VALVE)		2
	M85049/52-S-10N	.BACKSHELL		2
-84	MS3476L22-21S	.CONNECTOR - (P1) (ENGINE DISCONNECT)		1
	M85049/52-S-22N	.BACKSHELL		1
	NW4528405-1	HARNESS ASSY - LH WING (SEE FIG. 2-12-20)		REF
-85	MS3450KT24-12P	.CONNECTOR - (J61)		1
	M85049/52-S-24N	.BACKSHELL		1
-86	CE9226-4	.CABLE CLAMP (E1 & E2)		2
-87	MS3506-1	.CONNECTOR - (J1P) (28VDC EXTERNAL POWER)		1

FIGURE AND INDEX NUMBER	GROUP ELECTRICAL EQUIPMENT MAJOR ASSEMBLY POWER PLANT ELECTRICAL EQUIPMENT PART NUMBER	1 2 3 4 5 6 7 NOMENCLATURE	EFFEC-TIVITY	UNITS PER ASSY
2-12-22 -	NW4528401-1	HARNESS ASSY - RH WING (SEE FIG. 2-12-20)		REF
-88	MS3450KT20-27P	.CONNECTOR - (J60)		1
	M85049/52-S-20N	.BACKSHELL		1
-89	MS3476L14-5S	.CONNECTOR - (P1HA & P1HB) (SYSTEM SHUT OFF & WINDSHIELD DE ICE VALVE)		2
-90	42990-00	.CONNECTOR - (J5WB)		1
-91	42991-00	.CONNECTOR - (J6WB)		1
-92	MS3476L14-15S	.CONNECTOR - (P4HA) (MODULATING VALVE)		1
	M85049/52-S-14N	.BACKSHELL		1
-93	MS3459KT20-27S	.CONNECTOR - (P70) (AFT FUSELAGE DISCONNECT)		1
	M85049/52-S-20N	.BACKSHELL		1
-94	MS3456L14S-5S	.CONNECTOR - (P11HA) (ZONE 2 COOLING VALVE)		1
	M85049/52-S-20N	.BACKSHELL		1
-95	MS3476L12-3P	.CONNECTOR - (P2) (ENGINE DISCONNECT)		1
	M85049/52-S-12N	.BACKSHELL		1
-96	42990-00	.CONNECTOR - (J1WB) (V58880)		1
-97	42991-00	.CONNECTOR - (J2WB) (V58880)		1
		-000-		

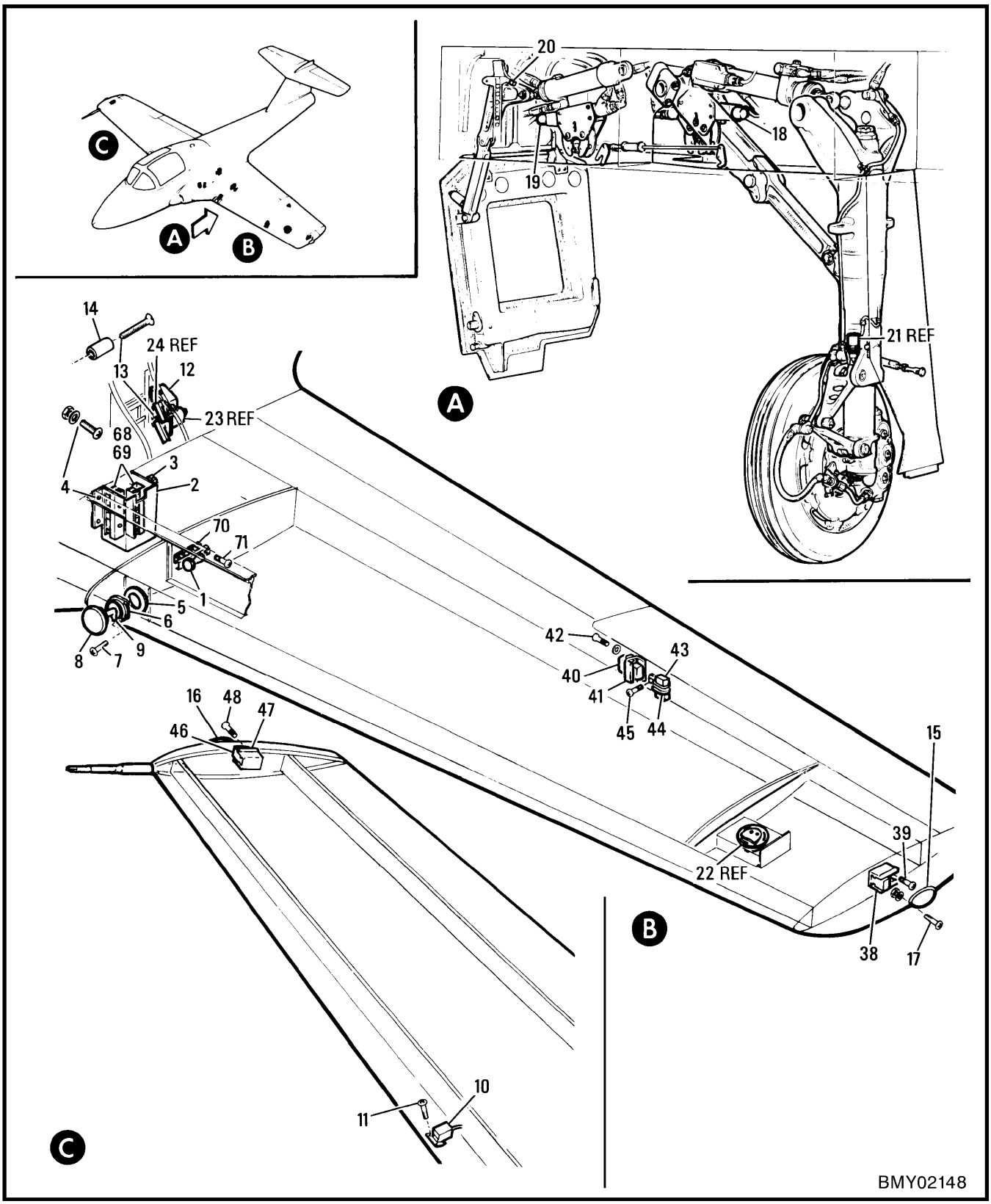

Figure 2-12-23 (Sheet 1 of 2) Wing Electrical Equipment

FIGURE AND INDEX NUMBER	GROUP ELECTRICAL EQUIPMENT MAJOR ASSEMBLY WING ELECTRICAL EQUIPMENT PART NUMBER	1 2 3 4 5 6 7 NOMENCLATURE	EFFEC-TIVITY	UNITS PER ASSY
2-12-23 -	41A-42103-60	ELECTRICAL EQUIP. INSTL - WING PORT (MODIFIED BY 41A-90909-1, 41A-90949-1, 41A-90954-1, 41A-90957-1, NW4528200-5 & -7) (SEE SECTION 1)		NP
	41A-42103-61	ELECTRICAL EQUIP. INSTL - WING STBD		NP
	41A-43000	.HARNESS INSTL - WING (SEE FIG. 2-12-24)		REF
- 1	MS35059-23	.SWITCH - (LANDING GEAR DOOR PORT)		1
	41A-42167	GUARD ASSY - WHEEL WELL TB PROTECTING PORT		1
	41A-42167-1	GUARD ASSY - WHEEL WELL TB PROTECTING STBD		1
- 2	41A-42167-2	.COVER - LH (TB IN WHEEL WELL)		1
	41A-42167-3	..COVER - RH (TB IN WHEEL WELL)		1
- 3	S1282A3	..NUT - (V88308)		2
	MS16624-1037	..RING		2
- 4	MS35206-245	.SCREW		2
	AN960-8	.WASHER		2
	MS21042L08	.NUT		2
- 5	G51H-C	.GROMMET - (V03296)		1
	41A-42103-54	ELECTRICAL EQUIP. INSTL - AILERON (PORT) (SEE SECTION 1)		NP
	41A-42103-58	ELECTRICAL EQUIP. INSTL - WING LE PORT (SEE SECTION 1)		NP
	41A-42103-59	ELECTRICAL EQUIP. INSTL - WING LE STBD		NP
- 6	41A-42118	.HOLDER - LANDING LAMP (LE PORT)		1
	41A-42118-1	.HOLDER - LANDING LAMP (LE STBD)		1
- 7	MS35207-263	.SCREW (IAW C-12-114-000/CF-473)		4
- 8	MS25241-4553	.LAMP - (DS59L & DS60L) (INCANDESCENT LANDING)		1
- 9	MS25171-1S	.NIPPLE		2
-10	C75507	.LIFT TRANSDUCER - (V83326) (STBD) (IAW 41A-50700-2) (FOR BRKDN SEE C-17-771-000/MN-000)		1
-11	MS24693-50	.SCREW - (STBD)		4
	41A-90851	FOLLOW UP SYS MECH INSTL - FLAP (SEE SECTION 7)		REF
-12	C75509	.TRANSMITTER - (V83326) (STALL WARNING POSN) (IAW 41A-50700-8)		1
	MS24693-50	.SCREW		3
-13	MS24693-278	.SCREW - (STALL WARNING TRANSMITTER STOP)		1
	AN960PD10L	.WASHER		3
-14	41A-90851-950	.SPACER - (TRANSMITTER STOP ECCENTRIC)		1
	MS21042L3	.NUT		2
	41A-11000	TIP GENL ASSY - WING (SEE SECTION 1)		REF
	41A-57402	.HARNESS ASSY - TB36 TO NAV LIGHT (PORT)		1
-15	AN3033-14	..LIGHT ASSY - (DS62L) (NAVIGATION) (PORT)		1
	MS24693-S30	...SCREW		1
	MS25309-7512	..LAMP		1
	AN3111-2	..RING		1
	41A-57502	.HARNESS ASSY - TB26 TO NAVIGATION LIGHT & PITOT HEATER (STBD WING)		REF
-16	AN3033-15	..LIGHT ASSY - (DS61L) (NAVIGATION) (STBD)		1
	MS24693-S30	...SCREW		1
	MS25309-7512	..LAMP		1
	AN3111-2	..RING		1
-17	MS24693-28	.SCREW		3
	AN960D6L	.WASHER		3
	MS21042L06	.NUT		3
	41A-87508-34	SWITCH ASSY - (MAIN GEAR UPLOCK PORT) (SEE SECTION 4)		1
	41A-87508-28	SWITCH ASSY - (MAIN GEAR UPLOCK STBD)		1
-18	21EN9-6	.SWITCH ASSY - (V91929)		1
	41A-87520-42	SWITCH ASSY - (MAIN GEAR DOORS UPLOCK) (SEE SECTION 4)		2
-19	21EN9-6	.SWITCH ASSY - (V91929)		1

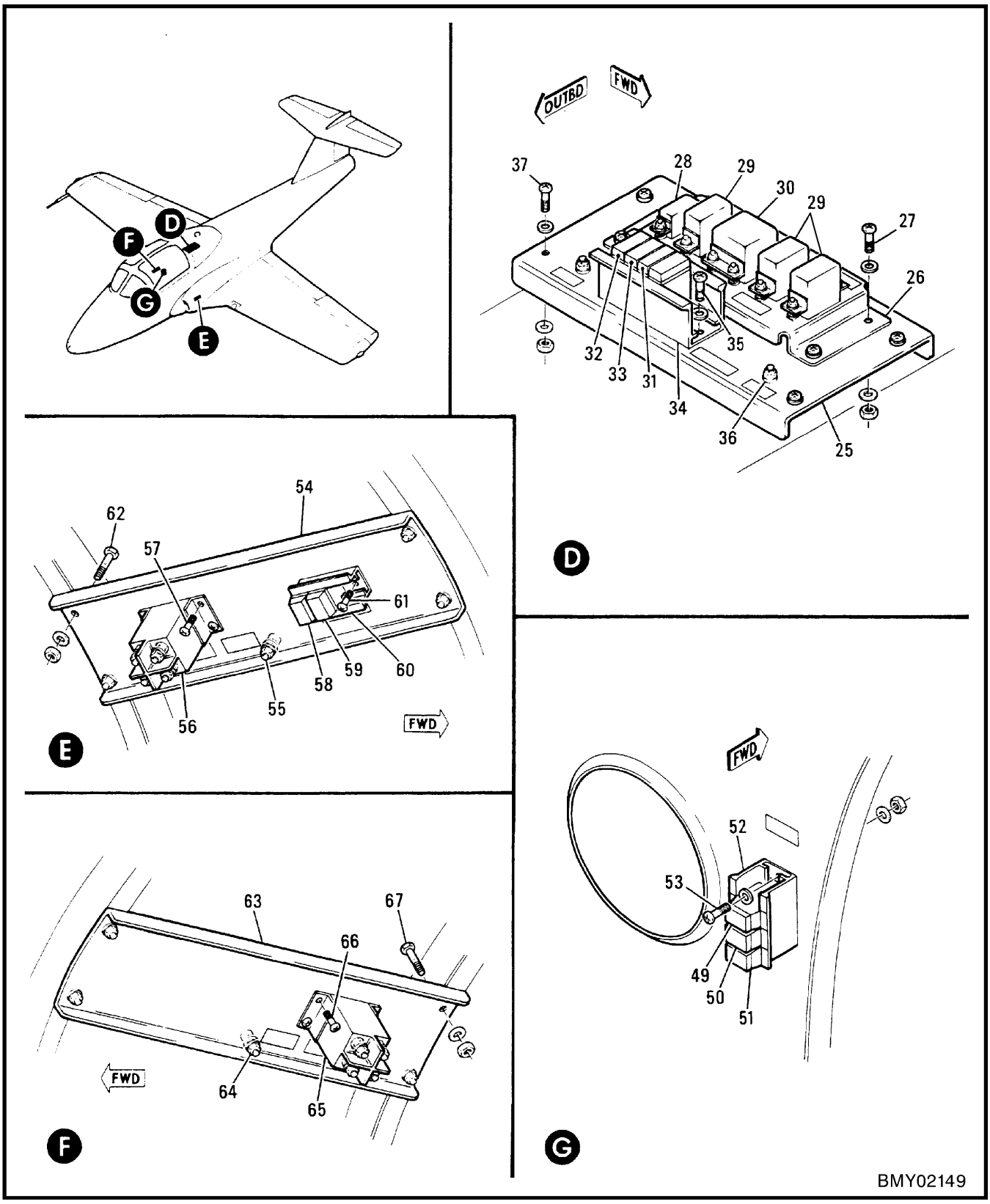

Figure 2-12-23 (Sheet 2 of 2) Wing Electrical Equipment

FIGURE AND INDEX NUMBER	GROUP: ELECTRICAL EQUIPMENT MAJOR ASSEMBLY: WING ELECTRICAL EQUIPMENT PART NUMBER	1 2 3 4 5 6 7 NOMENCLATURE	EFFEC-TIVITY	UNITS PER ASSY
2-12-23 -20	41A-87508-28	SWITCH ASSY - DOWNLOCK (MAIN GEAR DOOR MECH) (SEE SECTION 4)		1
	21EN9-6	.SWITCH ASSY - (V91929)		1
-21	21EN9-6	SWITCH ASSY - (V91929) (MLG SHOCK STRUT) (SEE SECTION 4)		REF
-22	664543	FLUX VALVE - TYPE C-2/C (SEE SECTION 14)		REF
-23	MIL-T-5583A	TRANSMITTER - FOLLOW UP (SEE SECTION 14)		REF
-24	41A-90861	LEVER - FLAP POSITION TRANSMITTER (STALL WARNING) (SEE SECTION 7)		REF
	41A-90909-1	TB & RELAY INSTL - RH WING FILLET (SEE FIG. 2-12-2)		NP
	41A-90931-1	.TB & RELAY ASSY		1
-25	41A-90910-1	..SHELF ASSY		1
-26	41A-90911-1	..PANEL - RELAY		1
-27	MS35206-262	..SCREW		4
	AN960KD10L	..WASHER		4
R -28	M83536/2-024	..RELAY - (K4HA)		1
	M12883/45-01	..SOCKET - (J4HA)		1
-29	M83536/10-024M	..RELAY - (K3GA, K3HA & K5HA)		3
	M12883/41-11	..SOCKET - (J3GA, J3HA & J5HA)		3
R	M39029/92-533	..PIN, ELECTRICAL		8
-30	MS27400-17	..RELAY - (K1GA)		1
	M12883/40-13	..SOCKET - (J1GA)		1
	41A-90904-82	..LABEL - (K1GA)		1
	41A-90904-204	..LABEL - (J1GA)		1
	41A-90904-84	..LABEL - (K3GA)		1
	41A-90904-196	..LABEL - (J3GA)		1
	41A-90904-86	..LABEL - (K3HA)		1
	41A-90904-198	..LABEL - (J3HA)		1
	41A-90904-88	..LABEL - (K4HA)		1
	41A-90904-200	..LABEL - (J4HA)		1
	41A-90904-90	..LABEL - (K5HA)		1
	41A-90904-202	..LABEL - (J5HA)		1
-31	M81714/60-16-02	..TERMINAL BLOCK		1
-32	M81714/60-20-04	..TERMINAL BLOCK		1
-33	M81714/60-20-03	..TERMINAL BLOCK		1
	MS27488-16	..PLUG - END SEAL		3
	MS27488-20	..PLUG - END SEAL		2
-34	SJT504504	..RACK ASSY - (V58982)		1
-35	MS35207-263	..SCREW		2
	41A-90904-92	..LABEL - (TB227)		1
-36	MS35207-265	..SCREW		2
	AN960JD10L	..WASHER		6
	MS35338-43	..LOCKWASHER		6
	MS35650-302	..NUT		4
	41A-90904-236	..LABEL - (N68)		1
	41A-90904-238	..LABEL - (N78)		1
-37	MS27039-1-06	.SCREW		4
	AN960KD10L	.WASHER		4
	41A-90957-1	EQUIPMENT INSTL - WING (LH) (SEE FIG. 2-12-2)		REF
-38	M81714/60-20-06	.TERMINAL BLOCK		1
	SJT503504	.RACK ASSY - (V58982)		1
	MS27488-20	.PLUG - END SEAL		AR
-39	MS35207-263	.SCREW		1
	41A-90904-306	.LABEL - (TB231)		1
R -40	M83536/10-024M	.RELAY - (K5C)		1
	M12883/41-11	.SOCKET - (J5C)		1
-41	41A-90927-1	.BRACKET		1
-42	MS35206-244	.SCREW		2
	AN960KD8L	.WASHER		2
	41A-90904-136	.LABEL - (K5C)		1
	41A-90904-284	.LABEL - (J5C)		1

FIGURE AND INDEX NUMBER	GROUP ELECTRICAL EQUIPMENT MAJOR ASSEMBLY WING ELECTRICAL EQUIPMENT PART NUMBER	1 2 3 4 5 6 7 NOMENCLATURE	EFFEC-TIVITY	UNITS PER ASSY
2-12-23 -43	M81714/60-20-2	.SPLICE		1
	MS27488-20	.PLUG - END SEAL		AR
-44	NAS1714D2-4S	.CLAMP		1
-45	MS35207-263	.SCREW		1
	AN960KD10L	.WASHER		1
	41A-90904-240	.LABEL - (SPLC1C)		1
	41A-90957-2	EQUIPMENT INSTL - WING (RH) (SEE FIG. 2-12-2)		REF
-46	M81714/60-20-06	.TERMINAL BLOCK		1
	M81714/60-16-03	.TERMINAL BLOCK		1
	MS27488-16	.PLUG - END SEAL		AR
	MS27488-20	.PLUG - END SEAL		AR
-47	SJT503504	.RACK ASSY		1
-48	MS35207-263	.SCREW		2
	41A-90904-142	.LABEL - (TB230)		1
-49	M81714/60-20-06	.TERMINAL BLOCK		1
-50	M81714/60-16-01	.TERMINAL BLOCK		1
-51	M81714/60-16-02	.TERMINAL BLOCK		1
	MS27488-16	.PLUG - END SEAL		AR
	MS27488-20	.PLUG - END SEAL		AR
-52	SJT504504	.RACK ASSY - (V58982)		1
-53	MS35207-263	.SCREW		2
	41A-90904-180	.LABEL - (TB228)		1
	41A-90954-1	RELAY INSTL - DUCT FAIRING LH (SEE FIG. 2-12-2)		NP
	41A-90987-1	.RELAY ASSY		1
-54	NW4528024-1	..SHELF ASSY		1
-55	MS35207-265	...SCREW - GROUND (N213)		1
	AN960KD10L	...WASHER		4
	MS35338-43	...LOCK WASHER		1
	MS21042L3	...NUT		1
	AN315-3R	...NUT		1
	41A-90904-214	..LABEL - (N213)		1
-56	M520-U5N-L	..RELAY - (V35344) (K2L)		1
-57	MS35206-227	..SCREW		3
	41A-90904-224	..LABEL - (K2L)		1
-58	M81714/60-20-04	..TERMINAL BLOCK		1
-59	M81714/60-20-06	..TERMINAL BLOCK		1
	MS27488-20	..PLUG - END SEAL		AR
-60	SJT503504	..RACK ASSY - (V58982)		1
-61	MS35207-264	..SCREW		2
	41A-90904-178	..LABEL - (TB232)		1
-62	AN3-3A	.BOLT		4
	AN960KD10L	.WASHER		4
	NAS679A3W	.NUT		4
	41A-90949-1	RELAY INSTL - DUCT FAIRING RH (SEE FIG. 2-12-2)		NP
	41A-90950-1	.RELAY ASSY		1
	41A-90951-1	..SHELF ASSY		1
-63	41A-90951-2	...PANEL		1
-64	MS35207-265	...SCREW		1
	AN960KD10L	...WASHER		4
	MS35338-43	...WASHER - LOCK		1
	AN315-3R	...NUT		1
	MS21042L3	...NUT - SELF LOCK		1
-65	M520-U5N-L	..RELAY - (V35344) (K1L)		1
-66	MS35206-227	..SCREW		3
	41A-90904-206	..LABEL - (K1L)		1

FIGURE AND INDEX NUMBER	GROUP ELECTRICAL EQUIPMENT MAJOR ASSEMBLY WING ELECTRICAL EQUIPMENT PART NUMBER	1 2 3 4 5 6 7 NOMENCLATURE	EFFEC-TIVITY	UNITS PER ASSY
2-12-23	41-90904-212	..LABEL - (N214)		1
-67	AN3-3A	.BOLT		4
	AN960KD10L	.WASHER		4
	NAS679A3W	.NUT		4
	NW4528200-5	WIRING INSTL - LH WING (SEE FIG. 2-12-24)		REF
	NW4528200-7	WIRING INSTL - RH WING (SEE FIG. 2-12-24)		REF
-68	MS27212-1-7	.TERMINAL BOARD - (TB20, TB28, TB51 & TB52)		2
-69	MS35206-215	.SCREW		4
	NAS1149FN416P	.WASHER		4
	NAS1149FN616P	.WASHER		14
	MS21042-04	.NUT		4
	MS21042-06	.NUT		14
	NAS1062-1	.STRIP		4
-70	MS27212-1-6	.TERMINAL BOARD - (TB19 & TB27)		1
	MS18029-1S-6	.COVER ASSY		1
-71	MS35206-215	.SCREW		2
	NAS1149FN616P	.WASHER		6
	NAS1149FN416P	.WASHER		2
	MS21042-06	.NUT		6
	MS21042-04	.NUT		2
	NAS1062-1	.STRIP		2
		-000-		

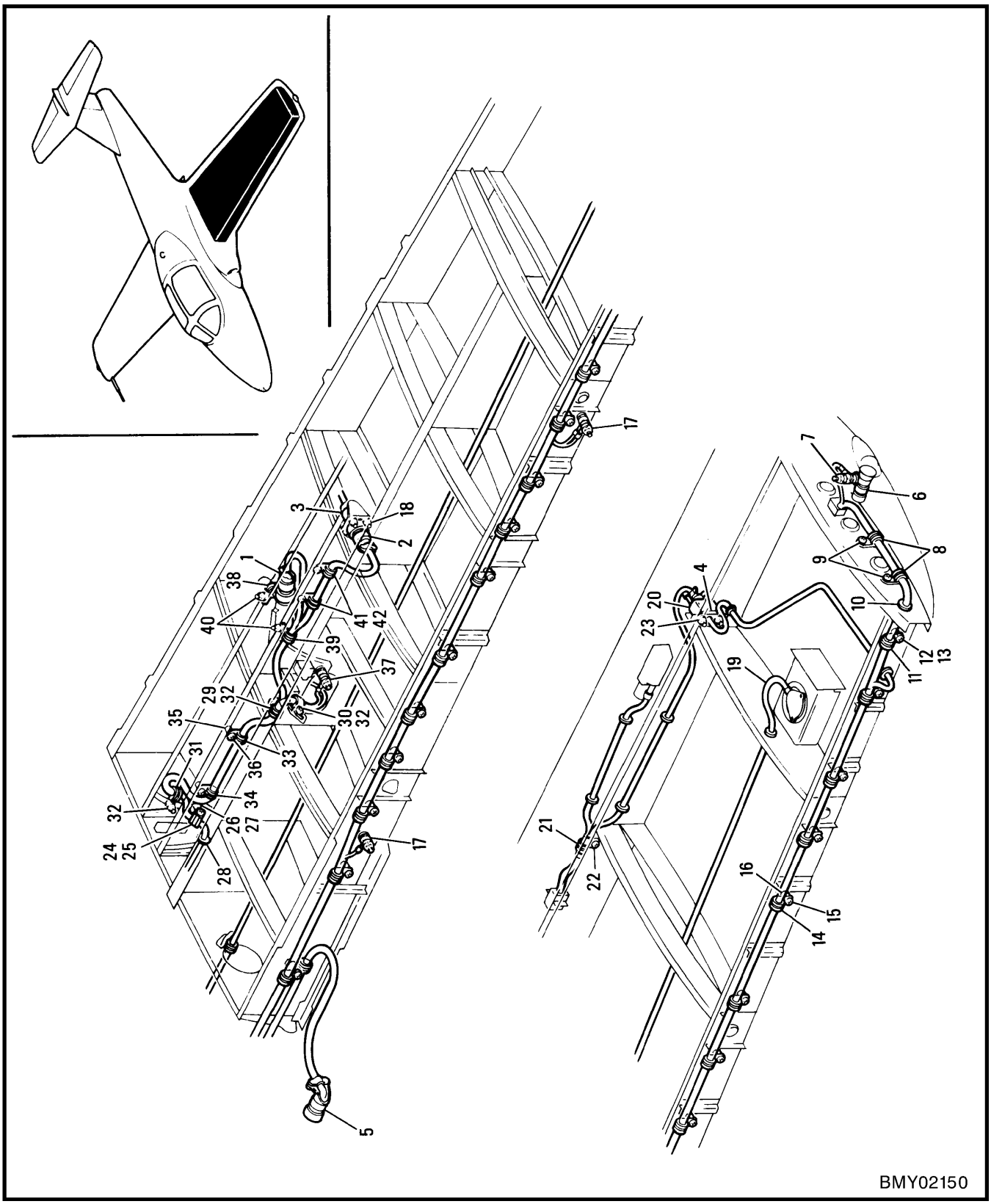

Figure 2-12-24 (Sheet 1 of 2) Wing Electrical Harnesses

FIGURE AND INDEX NUMBER	GROUP ELECTRICAL EQUIPMENT MAJOR ASSEMBLY WING ELECTRICAL HARNESSES PART NUMBER	1 2 3 4 5 6 7 NOMENCLATURE	EFFEC-TIVITY	UNITS PER ASSY
2-12-24 -	NW4528200-4	WIRING INSTL - LH WING FILLET (SEE FIG. 2-12-20)		REF
	NW4528400-1	.HARNESS ASSY - LH WING (SEE FIG. 2-12-20)		REF
- 1	MS3476L10-8S	..CONNECTOR - (P5G)		1
	M85049/52-S-10N	..BACKSHELL		1
- 2	MS3470L12-10S	..CONNECTOR - (J5G)		1
	M85049/52-S-12N	..BACKSHELL		1
- 3	MS3476L12-10P	..CONNECTOR - (P16G) (SEE SECTION 4)		REF
	M85049/52-S-12N	..BACKSHELL		1
- 4	M28748/4-C1AF1A	..CONNECTOR - (J4C)		1
- 5	MS3476L22-21P	..CONNECTOR - (P201)		1
	M85049/52-S-22N	..BACKSHELL		1
	NW4528200-5	WIRING INSTL - LH WING (SEE FIG. 2-12-2)		NP
- 6	AN735D12	.CLAMP		1
- 7	MS35206-248	.SCREW		1
	NAS1149FN816P	.WASHER		4
	MS35338-42	.WASHER		1
	MS35649-282	.NUT		1
	MS21042-08	.NUT		1
- 8	MS21919WDG3	.CLAMP		2
- 9	MS35206-245	.SCREW		2
	NAS1149FN816P	.WASHER		2
-10	MS35489-6	.GROMMET		1
-11	MS21919WDG3	.CLAMP		1
-12	MS35206-248	.SCREW		1
-13	NAS43DD-3-32	.SPACER		1
	NAS1149FN816P	.WASHER		1
-14	MS21919WDG5	.CLAMP		17
-15	MS35206-248	.SCREW		17
-16	NAS43DD-3-32	.SPACER		17
	NAS1149FN816P	.WASHER		17
-17	MS35207-265	.SCREW - GROUND STUD (N47 & N75)		2
	NAS1149D0363H	.WASHER		4
	MS35338-43	.WASHER		2
	NAS1149F0332P	.WASHER		2
	MS35650-302	.NUT		2
	MS21042-3	.NUT		2
-18	MS35206-215	.SCREW		4
	NAS1149-FN416	.WASHER		4
	MS21042-04	.NUT		4
-19	NW4528414-1	.CABLE ASSY - LH WING (SEE FIG. 2-12-20)		1
	NW4528413-1	.CABLE ASSY - LH WING		1
-20	M28748/3-C0AS1A	..CONNECTOR - (P4C)		1
-21	MS21919WDG8	.CLAMP		1
-22	MS35207-263	.SCREW		1
	NAS1149F0332P	.WASHER		1
-23	MS35206-215	.SCREW		2
	NAS1149FN416P	.WASHER		2
	MS21042-04	.NUT		2
-24	MS21919WDG5	.CLAMP		1
-25	MS35206-247	.SCREW		1
	NAS1149FN816P	.WASHER		3
	MS35338-42	.WASHER		1
	MS35649-282	.NUT		1
	MS21042-08	.NUT		1
-26	AN743-13	.BRACKET		1
-27	MS35207-263	.SCREW		1
	NAS1149F0332P	.WASHER		2
	MS21042-3	.NUT		1
-28	MS35489-17	.GROMMET		1

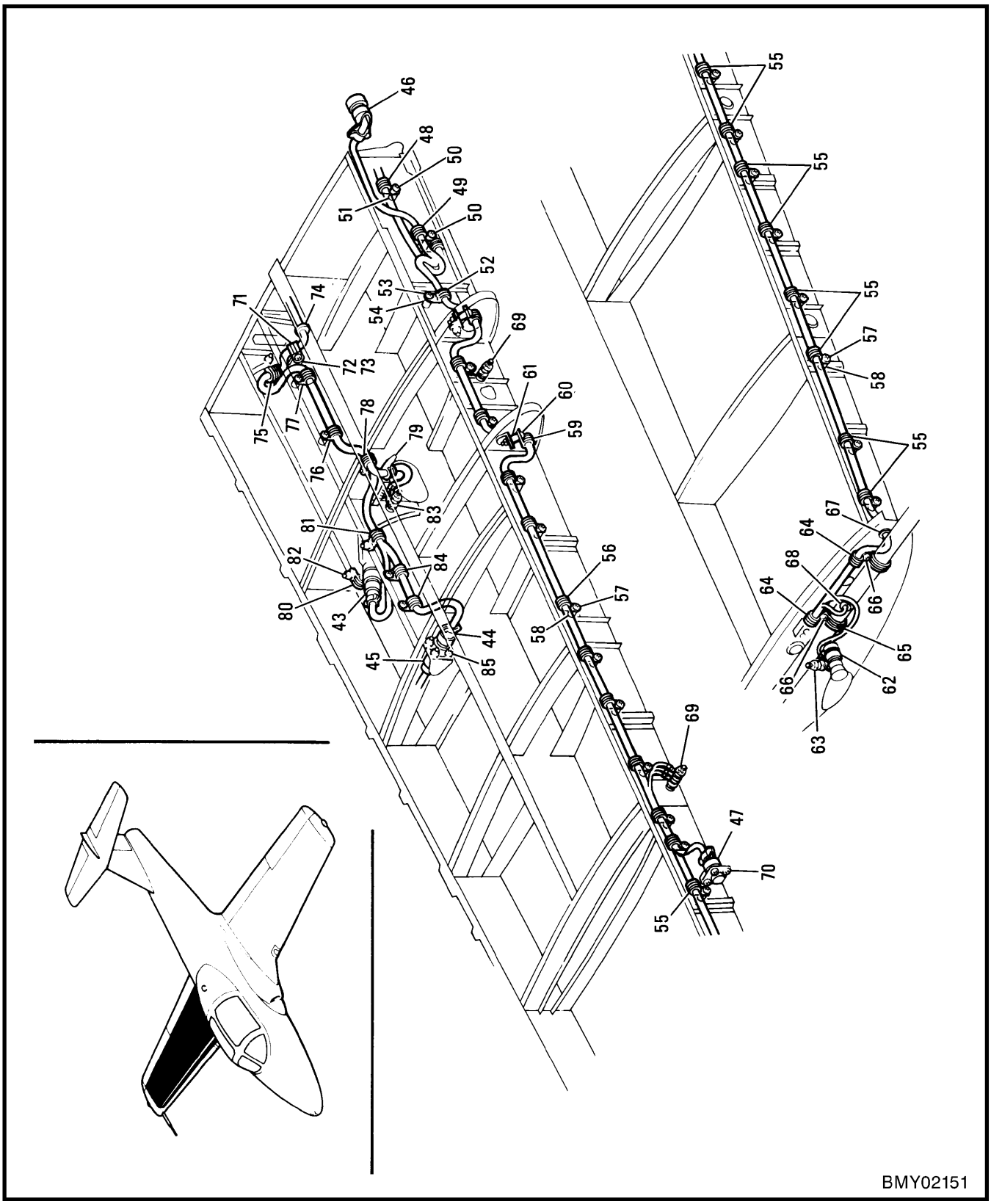

Figure 2-12-24 (Sheet 2 of 2) Wing Electrical Harnesses

FIGURE AND INDEX NUMBER	GROUP ELECTRICAL EQUIPMENT MAJOR ASSEMBLY WING ELECTRICAL HARNESSES PART NUMBER	1 2 3 4 5 6 7 NOMENCLATURE	EFFEC-TIVITY	UNITS PER ASSY
2-12-24 -29	MS21919WDG4	.CLAMP		1
-30	MS21919WDG8	.CLAMP		1
-31	MS21919WDG11	.CLAMP		1
-32	MS35206-245	.SCREW		3
	NAS1149FN816P	.WASHER		6
	MS21042-08	.NUT		3
-33	MS21919WDG4	.CLAMP		1
-34	MS21919WDG11	.CLAMP		1
-35	NAS43DD-3-16	.SPACER		2
-36	MS35206-247	.SCREW		2
	NAS1149FN816P	.WASHER		4
	MS21042-08	.NUT		2
-37	MS35207-265	.SCREW - GROUND STUD (N61)		1
	NAS1149D0363H	.WASHER		2
	NAS1149DF0332P	.WASHER		2
	MS35338-43	.WASHER		1
	MS21042-3	.NUT		1
	MS35650-302	.NUT		1
-38	MS21919WDG5	.CLAMP		1
-39	MS21919WDG8	.CLAMP		1
-40	MS35206-245	.SCREW		2
	NAS1149FN816P	.WASHER		2
	RM52LHA4972-6-82	.NUT - CLIP		2
-41	MS21919WDG4	.CLAMP		2
-42	MS35206-247	.SCREW		2
	NAS1149FN816P	.WASHER		6
	MS35338-42	.WASHER		2
	MS35649-282	.NUT		2
	MS21042-08	.NUT		2
	NW4528200-6	WIRING INSTL - RH WING FILLET (SEE FIG. 2-12-20)		REF
	NW4528401-1	.HARNESS ASSY - RH WING (SEE FIG. 2-12-20)		REF
-43	MS3476L10-6S	..CONNECTOR - (P7G)		1
	M85049/52-S-10N	..BACKSHELL		1
-44	MS3470L12-6S	..CONNECTOR - (J6G)		1
	M85049/52-S-12N	..BACKSHELL		1
-45	MS3476L12-6P	..CONNECTOR - (P6G) (SEE SECTION 4)		REF
	M85049/52-S-12N	..BACKSHELL		1
-46	MS3476L22-21P	..CONNECTOR - (P202)		1
	M85049/52-S-22N	..BACKSHELL		1
-47	MS3470L16-8S	..CONNECTOR - (J1FD)		1
	M85049/52-S-16N	..BACKSHELL		1
	NW4528200-7	WIRING INSTL - RH WING (SEE FIG. 2-12-2)		NP
-48	MS21919WDG5	.CLAMP		1
-49	MS21919WDG6	.CLAMP		1
-50	MS35206-249	.SCREW		1
-51	NAS43DD-3-32	.SPACER		1
	NAS1149FN816P	.WASHER		1
-52	MS21919WDG5	.CLAMP		1
-53	MS35206-248	.SCREW		1
-54	NAS43DD-3-32	.SPACER		1
	NAS1149FN816P	.WASHER		1
-55	MS21919WDG4	.CLAMP		9
-56	MS21919WDG5	.CLAMP		10
-57	MS35206-248	.SCREW		19
-58	NAS43DD-3-32	.SPACER		19
	NAS1149FN816P	.WASHER		19
-59	MS21919WDG5	.CLAMP		2

FIGURE AND INDEX NUMBER	GROUP ELECTRICAL EQUIPMENT MAJOR ASSEMBLY WING ELECTRICAL HARNESSES PART NUMBER	1 2 3 4 5 6 7 NOMENCLATURE	EFFEC-TIVITY	UNITS PER ASSY
2-12-24 -60	MS35206-247	.SCREW		2
-61	NAS43DD-3-5	.SPACER		2
	NAS1149FN816P	.WASHER		4
	MS21042-08	.NUT		2
-62	AN735D12	.CLAMP		1
-63	MS35206-248	.SCREW		1
	NAS1149FN816P	.WASHER		4
	MS35338-42	.WASHER		1
	MS35649-282	.NUT		1
	MS21042-08	.NUT		1
-64	MS21919WDG5	.CLAMP		2
-65	MS21919WDG24	.CLAMP		2
-66	MS35206-245	.SCREW		2
	NAS1149FN816P	.WASHER		4
	MS21042-08	.NUT		2
-67	MS35489-2	.GROMMET		1
-68	MS35489-11	.GROMMET		1
-69	MS35207-265	.SCREW - GROUND STUD (N46 & N71)		2
	NAS1149F0332P	.WASHER		4
	NAS1149D0363H	.WASHER		4
	MS35338-43	.WASHER		2
	MS35650-302	.NUT		2
	MS21042-3	.NUT		2
-70	MS35206-215	.SCREW		4
	NAS1149FN416P	.WASHER		8
	MS21042-04	.NUT		4
-71	MS21919WDG5	.CLAMP		1
	MS35206-247	.SCREW		1
	NAS1149FN816P	.WASHER		3
	MS35338-42	.WASHER		1
	MS35649-282	.NUT		1
	MS21042-08	.NUT		1
-72	AN743-13	.BRACKET		1
-73	MS35207-263	.SCREW		1
	NAS1149F0332P	.WASHER		2
	MS21042-3	.NUT		1
-74	MS35489-17	.GROMMET		1
-75	MS21919WDG11	.CLAMP		1
	MS35206-245	.SCREW		1
	NAS1149FN816P	.WASHER		1
	MS21042-08	.NUT		1
-76	MS21919WDG4	.CLAMP		1
-77	MS21919WDG11	.CLAMP		1
	NAS43DD-3-16	.SPACER		2
	MS35206-247	.SCREW		2
	NAS1149FN816P	.WASHER		4
	MS21042-08	.NUT		2
-78	MS21919WDG4	.CLAMP		1
-79	MS21919WDG8	.CLAMP		1
	MS35206-245	.SCREW		2
	NAS1149FN816P	.WASHER		2
	MS21042-08	.NUT		2
-80	MS21919WDG5	.CLAMP		1
-81	MS21919WDG8	.CLAMP		1

FIGURE AND INDEX NUMBER	GROUP ELECTRICAL EQUIPMENT MAJOR ASSEMBLY WING ELECTRICAL HARNESSES PART NUMBER	1 2 3 4 5 6 7 NOMENCLATURE	EFFEC-TIVITY	UNITS PER ASSY
2-12-24 -82	MS35206-245	.SCREW		2
	NAS1149FN816P	.WASHER		2
-83	MS35207-265	.SCREW - GROUND STUD (N59)		1
	NAS1149D0363H	.WASHER		2
	MS35338-43	.WASHER		1
	NAS1149F0332P	.WASHER		2
	MS35650-302	.NUT		1
	MS21042-3	.NUT		1
-84	MS21919WDG4	.CLAMP		2
	MS35206-247	.SCREW		2
	NAS1149FN816P	.WASHER		6
	MS35338-42	.WASHER		2
	MS35649-282	.NUT		2
	MS21042-08	.NUT		2
-85	MS35206-215	.SCREW		4
	NAS1149FN416P	.WASHER		4
	MS21042-04	.NUT		4
		-000-		

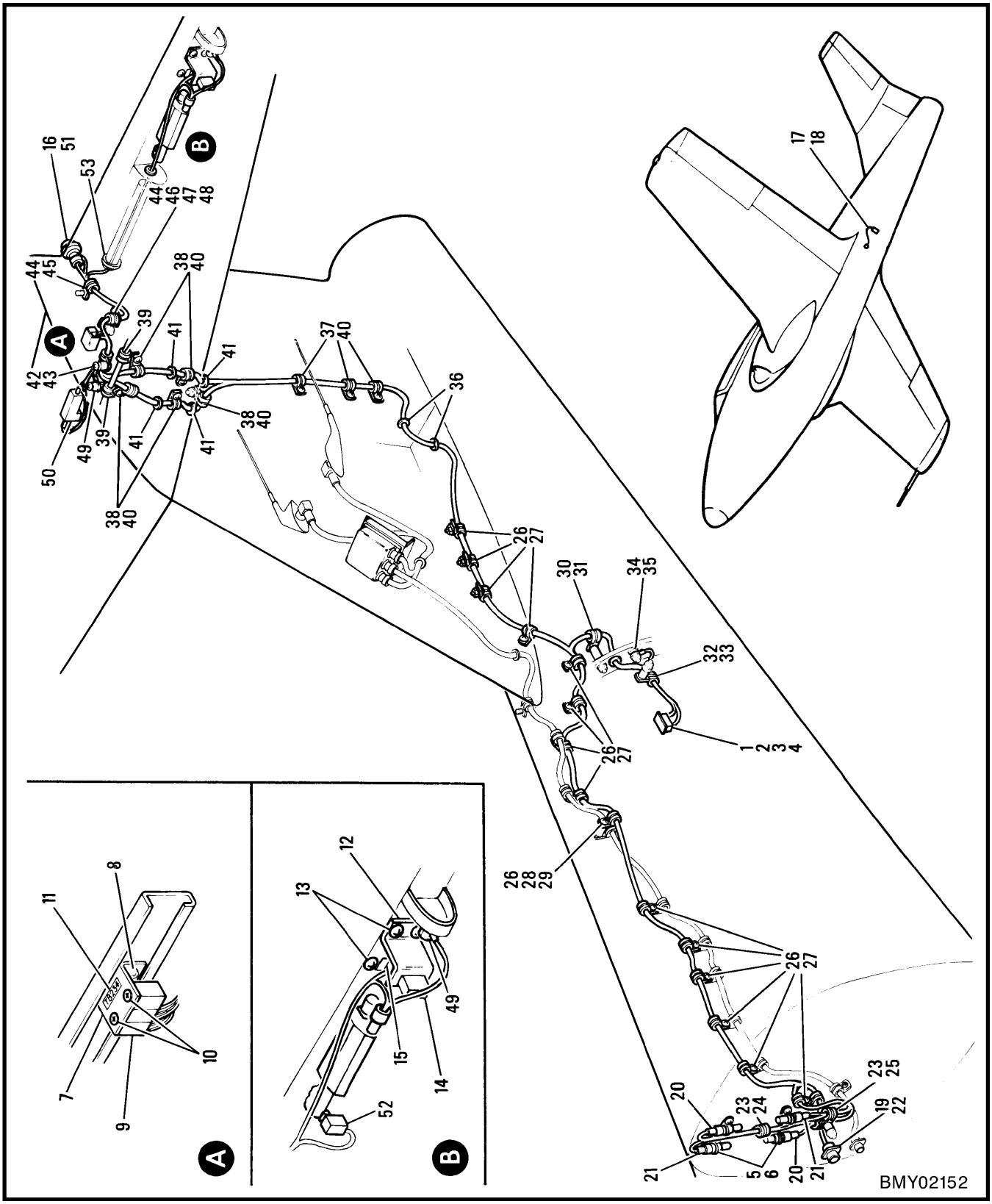

Figure 2-12-25 (Sheet 1 of 2) Rear Fuselage Electrical Equipment

FIGURE AND INDEX NUMBER	GROUP ELECTRICAL EQUIPMENT MAJOR ASSEMBLY REAR FUSELAGE ELECTRICAL EQUIPMENT PART NUMBER	1 2 3 4 5 6 7 NOMENCLATURE	EFFEC-TIVITY	UNITS PER ASSY
2-12-25 -	41A-42102	ELECTRICAL EQUIP. INSTL - REAR FUSELAGE (SEE SECTION 3) (MODIFIED BY MW45228200-10)		NP
- 1	MS24456-1	.SWITCH ASSY		1
- 2	C9614-1	.ACTUATOR ASSY - (V82647)		1
- 3	MS35206-219	.SCREW		2
	AN960-4	.WASHER		2
	MS21042L04	.NUT		2
- 4	NAS428-3-5	.BOLT		1
	AN345-10	.NUT		1
- 5	23693	.BRACKET - (V80099)		6
	22922	.NUT - (V80099)		4
- 6	MS35206-245	.SCREW		12
	AN960-10	.WASHER		12
	MS21042L08	..NUT		16
	41A-42122	.FIRE DETECTOR SYSTEM INSTL - ZONE 2		NP
	24421082	..CABLE ASSY - (V80099)		6
	41A-90967-1	EQUIPMENT INSTL - HORIZONTAL STAB (SEE FIG. 2-12-2)		NP
- 7	41A-91002-1	.BRACKET ASSY		1
- 8	MS35206-244	.SCREW		2
	AN960KD8L	.WASHER		2
	MS21042L08	.NUT		2
- 9	M81714/60-20-04	.TERMINAL BLOCK		1
	M81714/60-20-06	.TERMINAL BLOCK		1
	MS27488-20	.PLUG - END SEAL		7
	SJT503504	.RACK ASSY - (V58982)		1
-10	MS35207-263	.SCREW		2
-11	41A-90904-176	.LABEL - (TB234)		1
	41A-90969-1	EQUIPMENT INSTL - ELEVATOR TAB (SEE FIG. 2-12-2)		NP
-12	NW4528087-1	.BRACKET		1
-13	MS35206-245	.SCREW		4
	AN960KD8L	.WASHER		4
R -14	M83536/10-024M	.RELAY - (K6C)		1
	M12883/41-11	.SOCKET - (J6C)		1
R	M39029/92-533	..PIN, ELECTRICAL		8
-15	41A-90904-234	.LABEL - (K6C)		1
-16	MS25219-13	.LIGHT ASSY		1
	MS23006-2	.LENS, LIGHT		1
	MS35478-1683	.LAMP		1
	MS25036-101	.LUG		1
	NW4528142-1	JUMPER INSTL - BONDING (SEE FIG. 2-12-2)		REF
-17	M83413/8-H06DE	.JUMPER ASSY		1
-18	NAS6204-3	.BOLT		1
	AN960JD416	.WASHER		2
	AN960-416L	.WASHER		2
	MS35338-44	.WASHER		1
	MS21042L4	.NUT		1
	NW4528200-10	WIRING INSTL - AFT FUSELAGE (SEE FIG. 2-12-2) (MODIFYING 41A-42102, 41A-57802)		NP
	NW4528402-1	.HARNESS ASSY - AFT FUSELAGE		1
-19	MS3450KT20-27P	..CONNECTOR - (J70)		1
	M85049/52-S-20N	..BACKSHELL		1
-20	42991-00	..CONNECTOR ASSY - (J3WB & J7WB)		2
-21	42990-00	..CONNECTOR ASSY - (J4WB & J8WB)		2
-22	MS35206-230	.SCREW		4
	NAS1149FN616P	.WASHER		8
	MS21042-06	.NUT		4
-23	MS21919WCH3	.CLAMP		3
-24	MS35206-245	.SCREW		1

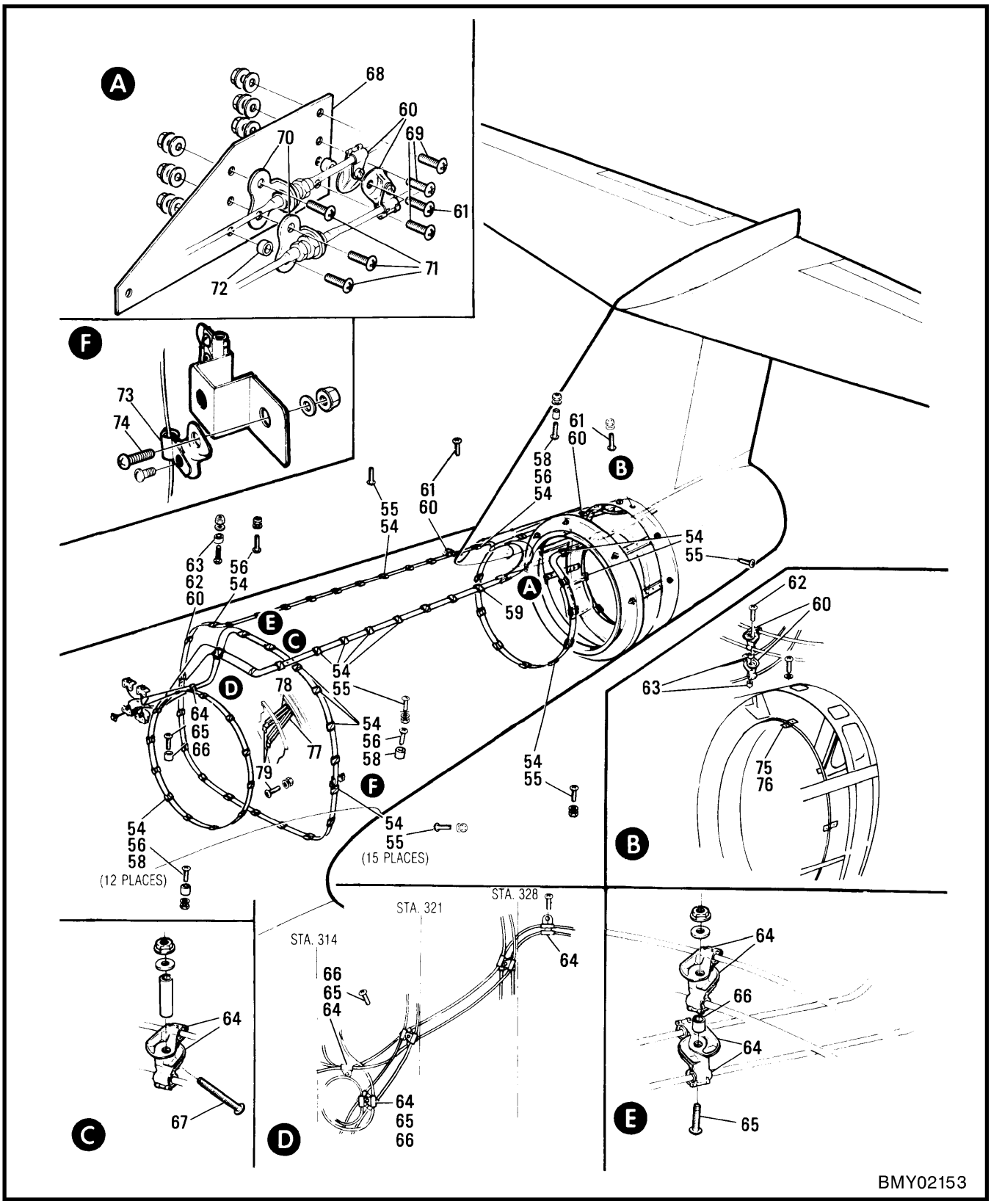

Figure 2-12-25 (Sheet 2 of 2) Rear Fuselage Electrical Equipment

FIGURE AND INDEX NUMBER	GROUP ELECTRICAL EQUIPMENT MAJOR ASSEMBLY REAR FUSELAGE ELECTRICAL EQUIPMENT PART NUMBER	1 2 3 4 5 6 7 NOMENCLATURE	EFFEC-TIVITY	UNITS PER ASSY
2-12-25 -25	MS35206-250	.SCREW		1
	NAS43-3-48	.SPACER		1
	NAS1149FN816P	.WASHER		4
	MS21042-06	.NUT		2
-26	MS21919WCH5	.CLAMP		14
-27	MS35206-245	.SCREW		14
	NAS1149FN816P	.WASHER		28
	MS21042-08	.NUT		14
-28	MS21919WCH5	.CLAMP		1
-29	MS35206-332	.SCREW		1
	NAS43-3-16	.SPACER		1
	NAS43-3-32	.SPACER		1
	NAS1149FN816P	.WASHER		2
	MS21042-08	.NUT		1
-30	MS21919WCH3	.CLAMP		1
-31	MS35206-251	.SCREW		1
	NAS43-3-40	.SPACER		1
	MS35338-42	.WASHER		1
	MS35649-282	.NUT		1
	MS21042-08	.NUT		1
-32	MS21919WCH3	.CLAMP		1
-33	MS35206-250	.SCREW		1
	NAS43-3-32	.SPACER		1
	NAS1149FN816P	.WASHER		2
	MS35338-42	.WASHER		1
	MS35649-282	.NUT		1
	MS21042-08	.NUT		1
-34	MS35207-265	.SCREW - GROUND STUD (N55)		1
	NAS1149D0363H	.WASHER		2
	NAS1149D0332P	.WASHER		2
	MS35338-43	.WASHER		1
	MS21042-3	.NUT		1
	MS35650-302	.NUT		1
-35	MS35489-6	.GROMMET		1
-36	MS35489-14	.GROMMET		2
-37	MS21919WDG4	.CLAMP		3
-38	MS21919WDG3	.CLAMP		5
-39	MS21919WDG6	.CLAMP		2
-40	MS35206-245	.SCREW		8
	NAS1149FN816P	.WASHER		14
	MS21042-08	.NUT		6
-41	MS35489-6	.GROMMET		4
-42	MS21919WDG5	.CLAMP		1
-43	MS35206-246	.SCREW		1
	MS35649-282	.SPACER		1
	NAS1149FN816P	.WASHER		3
	MS35338-42	.WASHER		1
	MS21042-08	.NUT		1
-44	MS21919WDG4	.CLAMP		2
-45	MS35206-245	.SCREW		1
	NAS1149FN816P	.WASHER		1
-46	MS35206-247	.SCREW		1
	NAS1149FN816P	.WASHER		3
	MS35338-42	.WASHER		4
	MS35649-282	.NUT		1
	MS21042-08	.NUT		1
-47	AN743-12	.BRACKET		1
-48	MS35206-245	.SCREW		1
	NAS1149FN816P	.WASHER		2

FIGURE AND INDEX NUMBER	GROUP ELECTRICAL EQUIPMENT MAJOR ASSEMBLY REAR FUSELAGE ELECTRICAL EQUIPMENT PART NUMBER		1 2 3 4 5 6 7 NOMENCLATURE	EFFEC-TIVITY	UNITS PER ASSY
2-12-25 -49	MS35207-285		.SCREW - GROUND STUD (N43 & N44)		2
	NAS1149D0363H		.WASHER		4
	NAS1149F0332P		.WASHER		4
	MS35338-43		.WASHER		2
	MS35650-302		.NUT		2
	MS21042-06		.NUT		1
	MS21042-3		.NUT		1
	NW4528403-1		.HARNESS ASSY - AFT FUSELAGE		1
-50	RER75F250R		..RESISTOR - (R1C)		1
	41A-42102-4		ELECTRICAL EQUIP. INSTL - EMPENNAGE (SEE SECTION 2)		NP
	41A-57802		.HARNESS ASSY - TB18 TO TAIL LIGHT (MODIFIED BY NW4528142-1)		REF
	AN3111-2		..RING		1
-51	MS35206-228		.SCREW		2
	41A-42102-2		ELECTRICAL EQUIP. INSTL - ELEVATOR (SEE SECTION 2)		NP
	41A-57800		.HARNESS ASSY - TB18 TO ELEVATOR (MODIFIED BY NW4528200-10)		REF
-52	MS25085-1		..SWITCH ASSY - (SEE SECTION 7)		1
	S1244B18-4		..CONDUIT - (V88308)		1
	S1244B12-42		..CONDUIT - (V88308)		1
-53	41A-42170		.STRIP - ELEVATOR HARNESS RUBBING		2
-54	7C11-4	*	..CLAMP - (V71286)		150
-55	MS35207-263		..SCREW		62
-56	MS35207-264	*	..SCREW		5
-57	MS35207-265		..SCREW		12
-58	NAS43-3-16		..SPACER		20
	AN960-10		..WASHER		80
	MS21042L3		..NUT		80
-59	7C11-4		..CLAMP - (V71286)		1
-60	7C11-4	*	..CLAMP - (V71286)		13
-61	MS35207-263	*	..SCREW		4
-62	MS35207-264	*	..SCREW		2
-63	NAS43DD3-16	*	..SPACER		2
	AN960-10	*	..WASHER		6
	MS21042L3	*	..NUT		6
-64	7C11-4	*	..CLAMP - (V71286)		14
-65	MS35207-268	***	..SCREW		3
-66	NAS43DD3-26	***	..SPACER		3
-67	MS35207-268	*	..SCREW		1
	NAS43DD3-48	*	..SPACER		1
	MS35207-263	*	..SCREW		1
	AN960-10	*	..WASHER		5
	MS21042L3	*	..NUT		5
-68	41A-42122-30	*	..PLATE		1
-69	MS35206-245	*	..SCREW		3
	AN960-10	*	..WASHER		3
	MS21042L3	*	..NUT		3
-70	23693		..BRACKET - (V80099)		2
	22922		..NUT - (V80099)		2
-71	MS35206-245	*	..SCREW		3
-72	NAS43DD3-4	*	..SPACER		1
	AN960-10	*	..WASHER		3
	MS21042L08	*	..NUT		3
-73	7C11-4	**	..CLAMP - (V71286)		2
		*	IAW C-12-114-000/CD-019		
		**	IAW C-12-114-000/CF-353		
		***	IAW C-12-114-000/CF-423		

FIGURE AND INDEX NUMBER	GROUP ELECTRICAL EQUIPMENT MAJOR ASSEMBLY REAR FUSELAGE ELECTRICAL EQUIPMENT PART NUMBER		1 2 3 4 5 6 7 NOMENCLATURE	EFFEC-TIVITY	UNITS PER ASSY
2-12-25 -74	MS35207-263	*	..SCREW		2
	AN960-10	*	..WASHER		2
	MS21042L3	*	..NUT		2
	41A-36027		FRAME INSTL - REAR FUSELAGE FIN REAR SPAR (SEE SECTION 3)		NP
	41A-36027-2		.FRAME ASSY - REAR FUSELAGE FIN REAR SPAR		1
-75	NO NUMBER	**	..BRACKET - FIRE DETECTOR WIRE CLIP		AR
-76	MS35207-263	**	..SCREW - (FS 422)		AR
	AN960-10	**	..WASHER		AR
	MS21042L3	**	..NUT		AR
	41A-42173	***	BRACKET INSTL - FIRE DETECTOR WIRE CLIP (FS 314-321) (SEE SECTION 3)		NP
-77	41A-42173-2		..BRACKET - FIRE DETECTOR CLIP		1
-78	41A-42173-4		..BRACKET - FIRE DETECTOR CLIP		1
-79	MS35207-261	***	..SCREW		4
	AN960-10L	***	..WASHER		4
	MS21042L3	***	..NUT		4
			-000-		
		*	IAW C-12-114-000/CF-353		
		**	IAW C-12-114-000/CF-344		
		***	IAW C-12-114-000/CD-019		

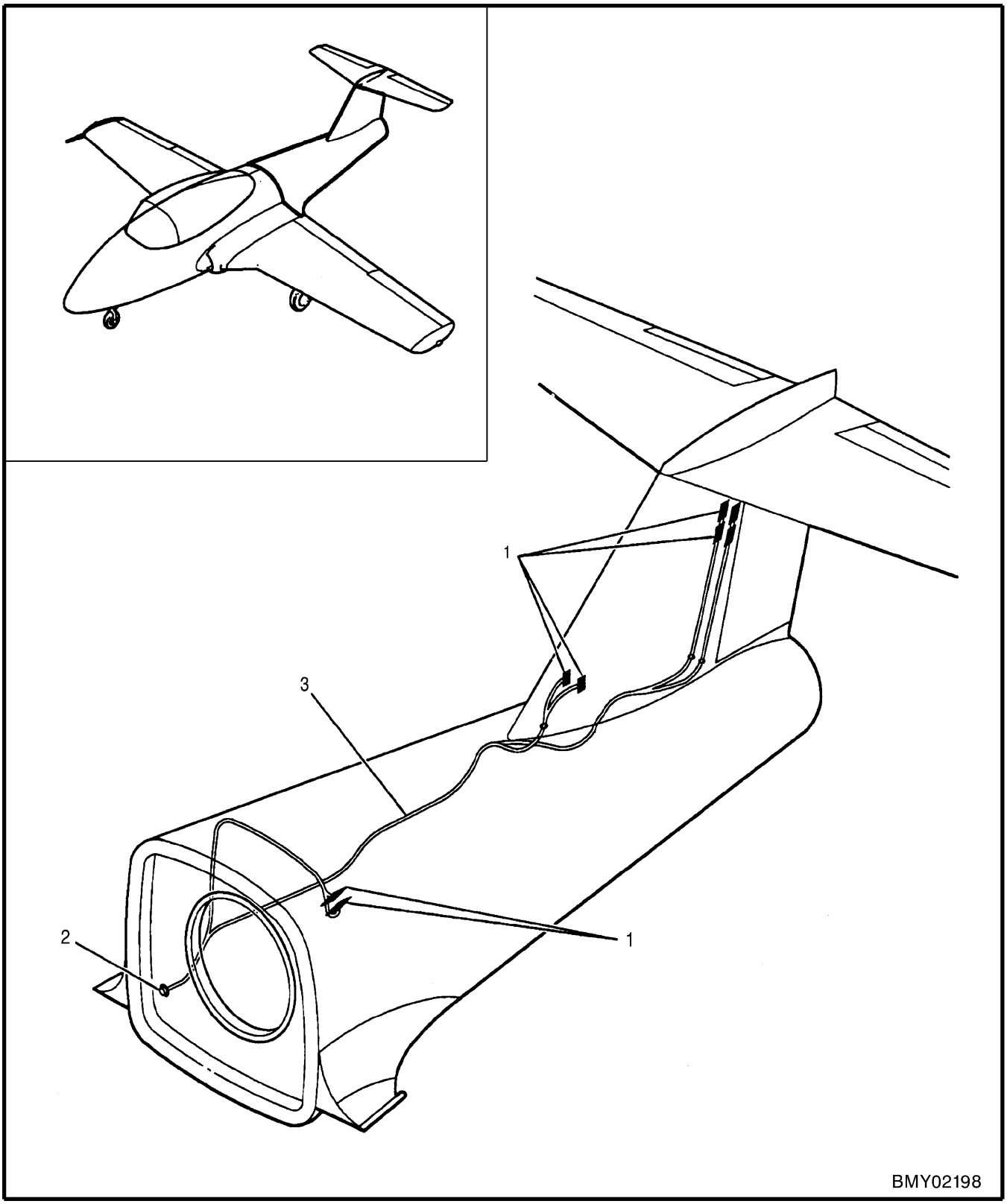

Figure 2-12-26 Rear Fuselage Electrical Equipment (Load Monitoring System)

FIGURE AND INDEX NUMBER	GROUP ELECTRICAL EQUIPMENT MAJOR ASSEMBLY REAR FUSELAGE ELECTRICAL EQUIPMENT (LOAD MONITORING SYSTEM)		EFFEC-TIVITY	UNITS PER ASSY
	PART NUMBER	1 2 3 4 5 6 7 NOMENCLATURE		
2-12-26 -1	DTD 2684-1	STRAIN GAUGE SENSOR		8
	EA956	.ADHESIVE		AR
	M-COAT J	.PROTECTIVE COATING		AR
-2	MS3470W24-61P	CONNECTOR		1
	MS21042L06	.NUT - SELF-LOCKING		4
	NAS1149DN616K	.WASHER		4
R -3	CAE9522088-1	.CABLE ASSY		1

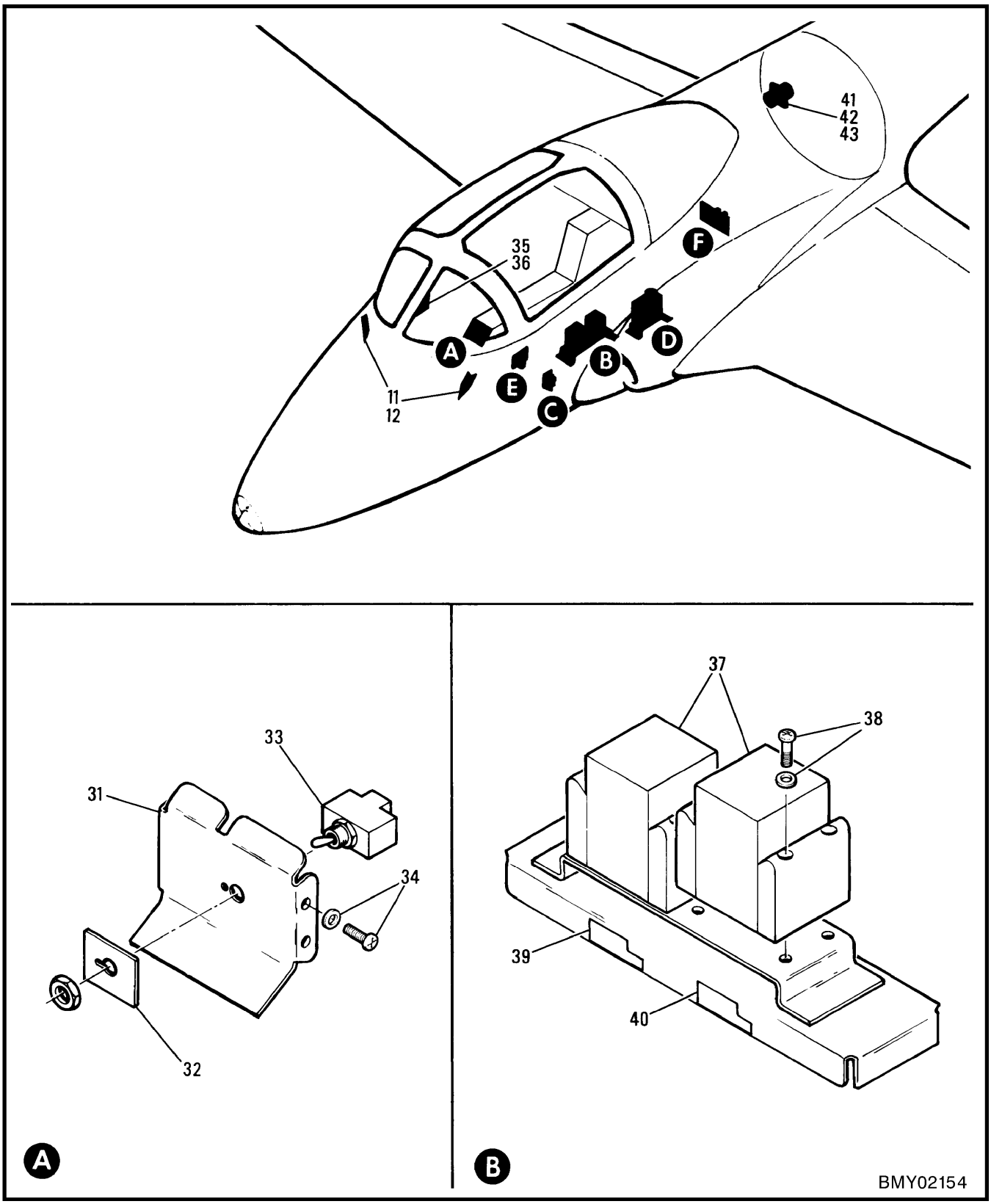

Figure 2-12-27 (Sheet 1 of 2) Smoke System Electrical (For Snowbird Aircraft Only)

FIGURE AND INDEX NUMBER	GROUP ELECTRICAL EQUIPMENT MAJOR ASSEMBLY SMOKE SYSTEM ELECTRICAL PART NUMBER	1 2 3 4 5 6 7 NOMENCLATURE	EFFEC-TIVITY	UNITS PER ASSY
2-12-27 -	NW4514200-1	SMOKE SYS GENL ASSY (SEE SECTIONS 1 & 6)	A	REF
	NW4514017-1	.SWITCH INSTL - TANK SELECTOR & SMOKE ARMING		NP
- 1	NW4514014-1	..MOUNTING PLATE		1
- 2	MS35207-263	..SCREW		6
	AN960-10L	..WASHER		6
	MS21042-3	..NUT		4
- 3	MS24523-22	..SWITCH		1
- 4	NW4514013-1	..LABEL - (SMK ARM ON OFF)		1
- 5	NW4514021-1	..PLATE		1
- 6	8916K759	..GUARD		1
- 7	NW4514016-1	..BRACKET		1
- 8	MS24523-23	..SWITCH		1
- 9	NW4514015-1	..LABEL - (TANK SEL PORT STBD)		1
-10	NW4514022-1	..PLATE		1
	NW4514025-1	.BRACKET INSTL - SMOKE ON LIGHT		NP
-11	NW4514024-1	..BRACKET - (LH)		1
	NW4514024-2	..BRACKET - (RH)		1
-12	AN3-5	..BOLT		4
	AN960-10L	..WASHER		8
	MS21044N3	..NUT		4
	NW4514203-1	.CIRCUIT BREAKER INSTL		NP
-13	MS25244-5	..CIRCUIT BREAKER - (5A)		1
-14	MS25244-7.5	..CIRCUIT BREAKER - (7.5A)		1
-15	MS25226-4-2	..BUSBAR		3
	NW4514001-1	.CONTROL UNIT INSTL - SMOKE		NP
	NW4514004-1	..CONTROL UNIT ASSY - SMOKE		1
-16	NW4514005-1	...BOX - RELAY		1
	NW4514006-1	...RELAY ASSY		1
-17	NW4514076-1	....MOUNT ASSY - RELAY		1
-18	MS3122E10-6P	....CONNECTOR		1
-19	MS3472L10-6P	....CONNECTOR		1
	M85049/31-S-10N	....BACKSHELL		1
-20	NAS600-6	....SCREW		4
	AN960-4L	....WASHER		4
	MS21042L04	....NUT		4
-21	NW4514073-5	....LABEL - (J1SG) (MADE FROM 8015 (V09581))		1
-22	9220-4249	....RELAY - (V35344) (K1SG & K4SG)		2
	S0-1000	....SOCKET - (V35344)		2
	NW4514073-1	....LABEL - (K1SG) (MADE FROM 8015 (V09581))		1
	NW4514073-4	....LABEL - (K4SG) (MADE FROM 8015 (V09581))		1
-23	9228-4424	....RELAY - (V35344) (K2SG & K3SG)		2
	S0-1019-7125	....SOCKET - (V35344)		2
	NW4514073-2	....LABEL - (K2SG) (MADE FROM 8015 (V09581))		1
	NW4514073-3	....LABEL - (K3SG) (MADE FROM 8015 (V09581))		1
-24	MS25332-1	....SCREW & WASHER ASSY		8
	MS21042-L3	....NUT		8
-25	NAS600-10	....SCREW		4
-26	NAS600-6	....SCREW		4
-27	NAS43DD-0-16	....SPACER		4
	MS35338-40	....WASHER		8
-28	MS35207-244	...SCREW		4
-29	NW4514002-1	..BRACKET		1
	MS35207-262	..SCREW		3
	AN960-10L	..WASHER		3
-30	NW4514003-1	..LABEL - (MADE FROM 8015 (V09581))		1
	A	FOR SNOWBIRD ARCFT ONLY		

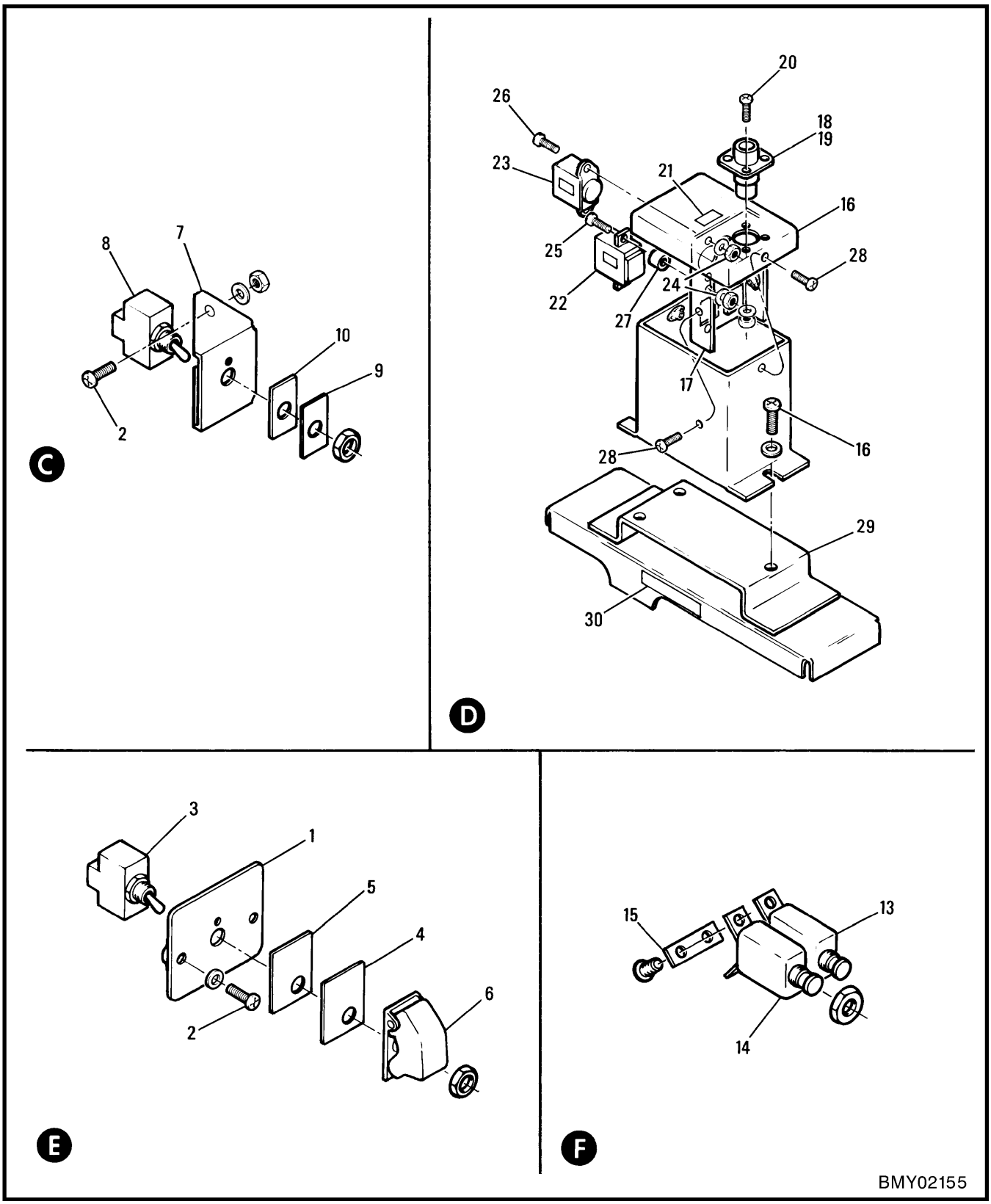

Figure 2-12-27 (Sheet 2 of 2) Smoke System Electrical (For Snowbird Arcft Only)

FIGURE AND INDEX NUMBER	GROUP ELECTRICAL EQUIPMENT MAJOR ASSEMBLY SMOKE SYSTEM ELECTRICAL PART NUMBER	1 2 3 4 5 6 7 NOMENCLATURE	EFFEC-TIVITY	UNITS PER ASSY
2-12-27 -	NW4514086-1	.SWITCH INSTL - TANK SEL		NP
-31	NW4514085-1	..PANEL		1
	MS21051L08	...NUT		1
	MS21069L08	...NUT		2
-32	NW4514084-1	..LABEL - (MADE FROM 8015)		1
-33	MS24523-23	..SWITCH		1
-34	MS35206-245	..SCREW		4
	AN960-8L	..WASHER		4
	NW4514088-1	.LIGHT INSTL - WARNING		NP
-35	MS25041-7	..LIGHT		1
-36	NW4514087-1	..LABEL - (SMK ON) (MADE FROM 8015 (V09581))		1
	NW4514020-1	.RELAY INSTL - SMOKE FAIL/SAFE		NP
-37	9330-4026	..RELAY - (V35344) (K5SG & K6SG)		2
-38	MS35206-244	..SCREW		8
	AN960-8L	..WASHER		8
	MS21055L08	..NUT		8
-39	NW4514019-1	..LABEL - (SMK FAIL SAFE 1)		1
-40	NW4514019-2	..LABEL - (SMK FAIL SAFE 2)		1
	NW4514202-1	.CONNECTOR INSTL - (J2SG)		NP
-41	MS3450L14S-5P	..CONNECTOR - (J2SG)		1
	M85049/52-S-14N	..BACKSHELL		1
-42	MS35206-217	..SCREW		4
	AN960-4L	..WASHER		4
	MS21042L04	..NUT		4
-43	NW4514063-1	..LABEL - (J2SG) (MADE FROM 8015 (V09581))		1
	NW4514201-1	.WIRING INSTL - SMOKE SYST (SEE FIG. 2-12-28)		REF
		-000-		

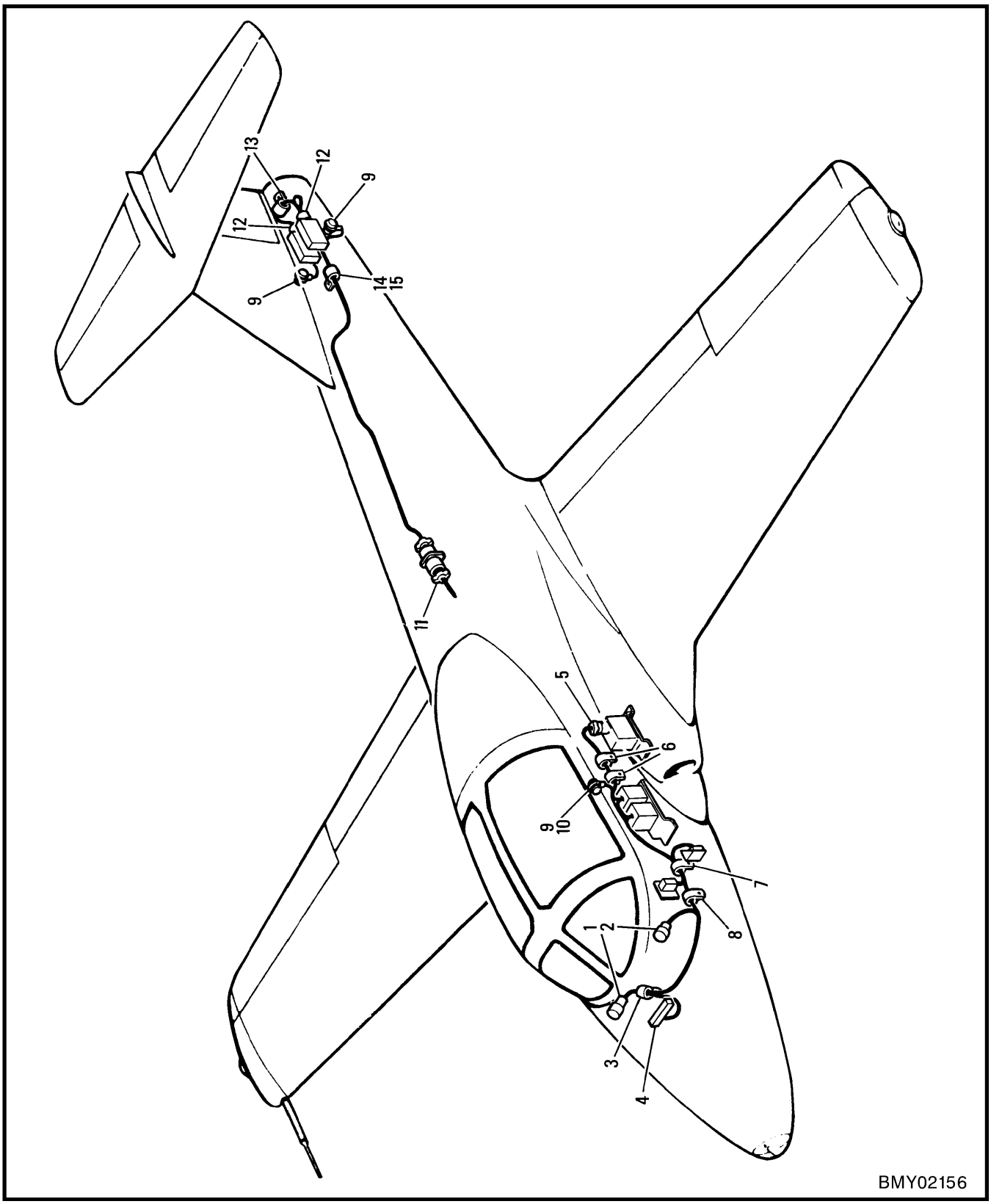

Figure 2-12-28 Smoke System Wiring (For Snowbird Arcft Only)

FIGURE AND INDEX NUMBER	GROUP ELECTRICAL EQUIPMENT MAJOR ASSEMBLY SMOKE SYSTEM WIRING PART NUMBER	1 2 3 4 5 6 7 NOMENCLATURE	EFFEC-TIVITY	UNITS PER ASSY
2-12-28 -	NW4514201-1	WIRING INSTL - SMOKE SYST (SEE FIG. 2-12-27)	A	NP
	NW4514296-1	.LEAD ASSY		REF
	NW4514296-3	.LEAD ASSY		REF
- 1	M9177/3-1	..CONNECTOR		1
- 2	MS35206-229	.SCREW		4
	NAS1149FN616P	.WASHER		4
	MS21042-06	.NUT		4
- 3	MS21919WDG5	.CLAMP		1
- 4	M81714/60-20-03	.TERMINAL BLOCK - (TB220-12)		1
	NW4514297-1	.LEAD ASSY - (SMOKE GENERATION)		REF
- 5	MS3476L10-6S	..CONNECTOR - (P1SG)		1
	M85049/52-S-10N	..BACKSHELL		1
- 6	MS21919WDG4	.CLAMP		2
- 7	MS21919WDG6	.CLAMP		1
- 8	MS21919WDG8	.CLAMP		1
- 9	MS35207-267	.SCREW - GROUND (N215, N216 & N500)		3
	NAS1149F0332P	.WASHER		6
	NAS1149FD0363H	.WASHER		6
	MS35338-43	.WASHER		3
	MS35650-302	.NUT		3
	MS21042-3	.NUT		3
-10	NW4514073-6	.LABEL - (N500)		1
-11	MS3456L14S-5S	.CONNECTOR - (P2SG)		1
	M85049/52-S-14N	.BACKSHELL		1
-12	MS3476L12-3S	.CONNECTOR - (P3SG & P4SG)		2
	M85049/52-S-12N	.BACKSHELL		2
-13	MS21919WCH4	.CLAMP		2
-14	MS21919WCH8	.CLAMP		1
-15	MS35207-264	.SCREW		1
	NAS1149F0332P	.WASHER		1
	MS21042-3	.NUT		1
		-000-		
	A	FOR SNOWBIRD ARCFT ONLY		

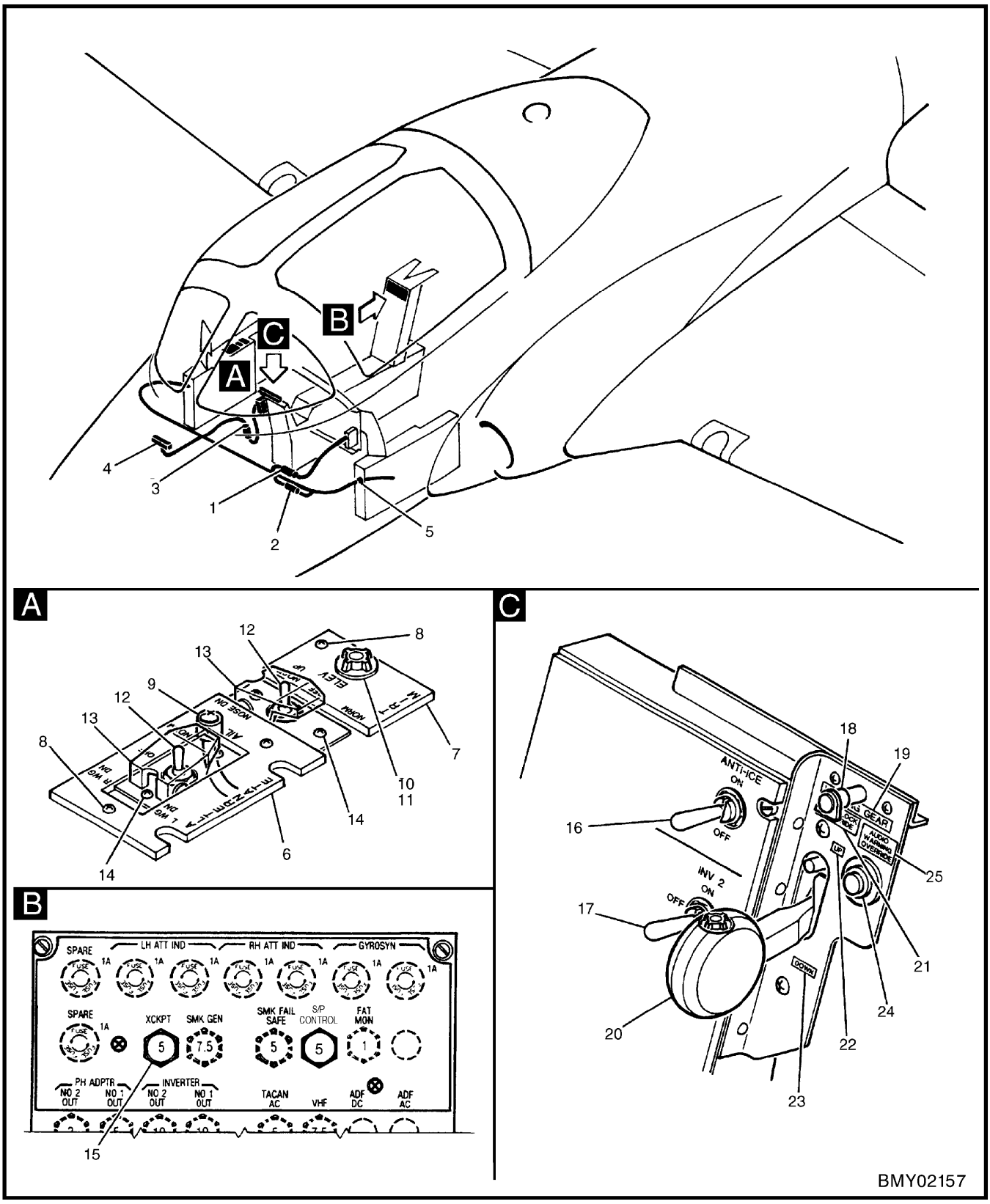

Figure 2-12-29 Cross Cockpit Electrical Mod (For Snowbird Arcft Only)

FIGURE AND INDEX NUMBER	GROUP ELECTRICAL EQUIPMENT MAJOR ASSEMBLY CROSS COCKPIT ELECTRICAL MOD PART NUMBER	1 2 3 4 5 6 7 NOMENCLATURE	EFFEC-TIVITY	UNITS PER ASSY
2-12-29 -	NW4513200-1	CROSS COCKPIT GENL ASSY (SEE SECTION 1, 7, 8, 11 & 14)	A	REF
	NW4513205-1	.WIRING INSTL - CROSS COCKPIT		NP
	NW4513296-1	..LEAD ASSY		REF
- 1	MS3476L14-19S	...CONNECTOR - (P2EX)		1
	M85049/52-S-14N	...BACKSHELL		1
	NW4513298-1	..LEAD ASSY		REF
- 2	MS3470L14-19P	...CONNECTOR - (J14EX)		1
	M85049/52-S-14N	...BACKSHELL		1
	NW4513297-1	..LEAD ASSY		REF
- 3	MS3476L14-19S	...CONNECTOR - (P1EX)		1
	M85049/52-S-14N	...BACKSHELL		1
- 4	M81714/60-20-04	..TERMINAL BLOCK - (TB220-9, -10 & -11)		3
- 5	MS21919WDG8	..CLAMP		1
	NW4513054-1	.TRIM SWITCHES INSTL - ALTERNATE AIL/ELEV		NP
- 6	41A-50726	..PANEL - EDGE LIT		1
- 7	41A-50725	..PANEL - EDGE LIT		1
- 8	MS35206-230	..SCREW		3
	S-1426-6	..WASHER - (V86061)		3
- 9	107A	..CONNECTOR - (J6EX) (V33483)		1
-10	A7165-1-327	..LIGHT ASSY - (V72914)		1
-11	MS25237-327	..LAMP		1
-12	8749K-13	..SWITCH - (S4EX & S6EX) (V81640)		2
-13	8916K703	..GUARD - (V81640)		2
-14	MS35206-229	..SCREW		4
	NW4513203-1	.CIRCUIT BREAKER INSTL - CROSS COCKPIT		NP
-15	MS25244-5	..CIRCUIT BREAKER - (CB1EX) (5A)		1
	NW4513013-1	.SWITCH INSTL - CENTRE CONSOLE & ALTERNATE LANDING GEAR SELECTOR		NP
-16	MS24659-23D	..SWITCH - (ANTI-ICE)		1
-17	MS24658-23D	..SWITCH - (INV 2)		1
-18	MS25237-327	..LAMP		1
	A6745B24	..FIXTURE - (V72914)		1
-19	NW4513009-1	..LABEL - (LANDING GEAR) (MADE FROM 8015 (V09581))		1
-20	A50M6-4	..SWITCH		1
	MS35207-261	..SCREW		2
	MS25237-328	..LAMP		2
-21	NW4513111-1	..LABEL - (DOWNLOCK OVERRIDE) (MADE FROM 8015 (09581))		1
-22	NW4513011-1	..LABEL - (UP) (MADE FROM 8015 (V09581))		1
-23	NW4513012-1	..LABEL - (DOWN) (MADE FROM 8015 (V09581))		1
-24	MS25089-4C	..SWITCH - (S1EX)		1
-25	NW4513010-1	..LABEL - (AUDIO WARNING OVERRIDE) (MADE FROM 8015 (V09581))		1
		-000-		
	A	FOR SNOWBIRD ARCFT ONLY		

SECTION 13

ELECTRONIC EQUIPMENT

TABLE OF CONTENTS

Figure	Title	Page
2-13-1	Underwater Acoustic Locator Beacon	2-13-2
2-13-2	Nose Compartment Electronics & Antennas	2-13-4
2-13-3	Nose Compartment Electronic Harnesses	2-13-14
2-13-4	Cockpit Electronic Equipment	2-13-24
2-13-5	Cockpit Electronic Harnesses	2-13-30
2-13-6	Automatic Direction Finding System – DF-206A	2-13-34

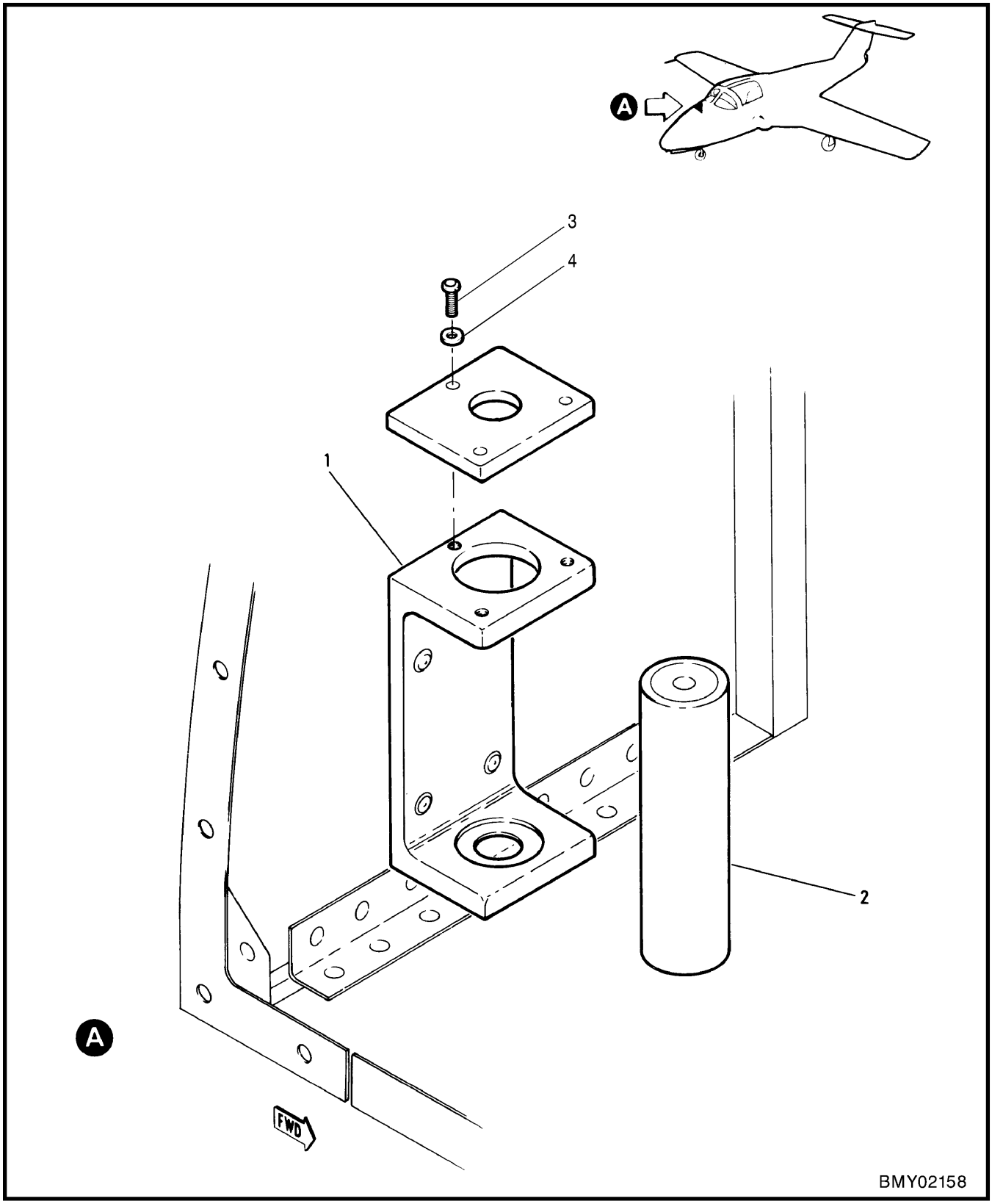

Figure 2-13-1 Underwater Acoustic Locator Beacon

FIGURE AND INDEX NUMBER	GROUP ELECTRONIC EQUIPMENT MAJOR ASSEMBLY UNDERWATER ACOUSTIC LOCATOR BEACON PART NUMBER		1 2 3 4 5 6 7 NOMENCLATURE	EFFEC-TIVITY	UNITS PER ASSY
2-13-1 -	NO NUMBER		BEACON INSTL - UNDERWATER ACOUSTIC LOCATOR (IAW C-12-114-000/CF-416)		NP
- 1	N30A26	*	.MOUNTING KIT - (V94970)		1
	MS20470AD6-10		.RIVET		4
- 2	DK100	**	.BEACON - (V94970) (UNDERWATER ACOUSTIC)		1
- 3	810-568		.SCREW - CAP - SOCKET HEAD		3
- 4	810-515		.WASHER - LOCK		3
			-000-		
		*	FOR BRKDN SEE C-57-701-000/MS-001		
		**	IAW C-12-114-000/CF-501		

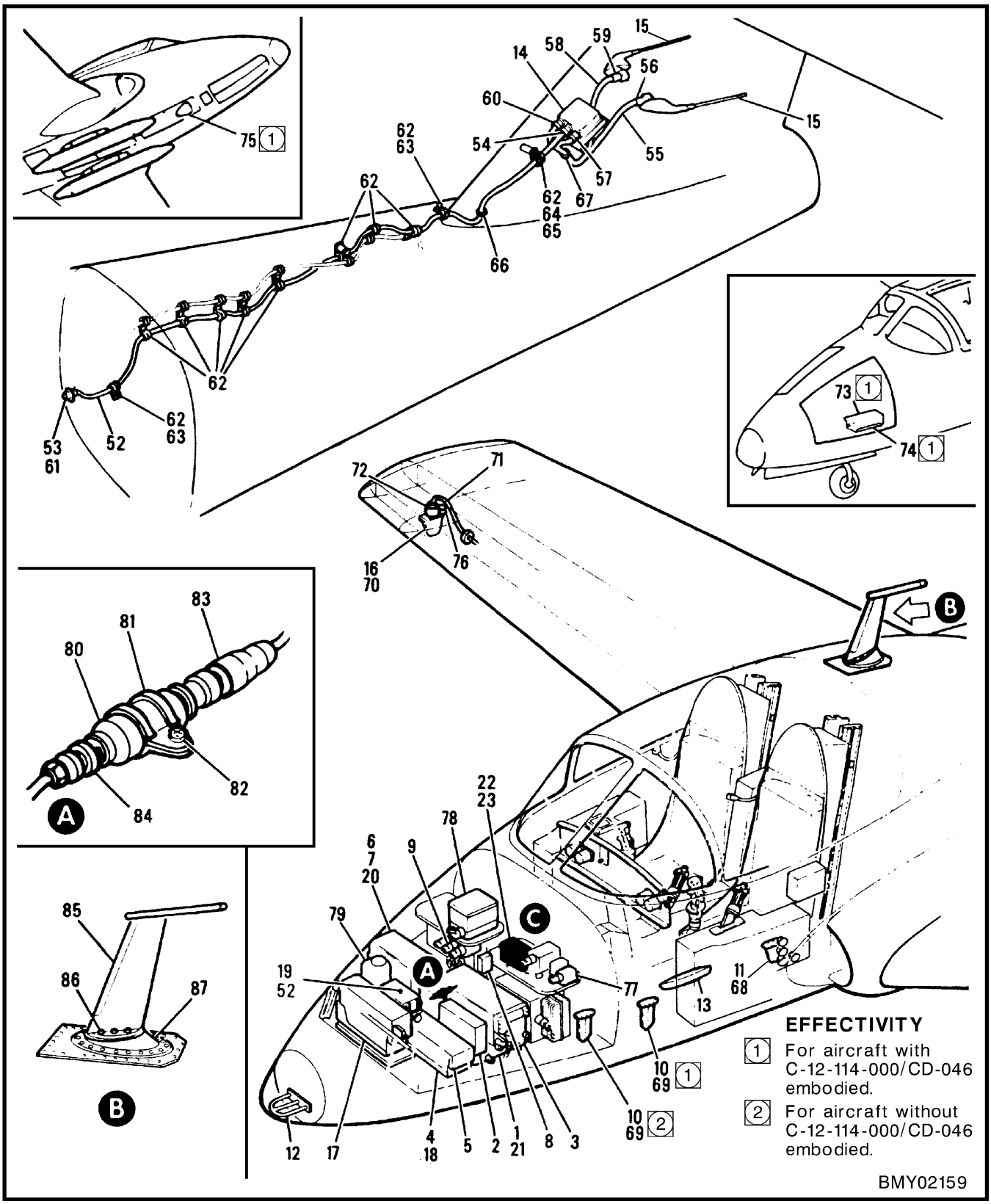

Figure 2-13-2 (Sheet 1 of 4) Nose Compartment Electronics & Antennas

FIGURE AND INDEX NUMBER	GROUP ELECTRONIC EQUIPMENT MAJOR ASSEMBLY NOSE COMPARTMENT ELECTRONICS & ANTENNAS PART NUMBER		1 2 3 4 5 6 7 NOMENCLATURE	EFFEC-TIVITY	UNITS PER ASSY
2-13-2 -	41A-42100	*	ELECTRICAL & ELECTRONIC EQUIP INSTL - NOSE (SEE SECTION 12) (MODIFIED BY NW4528230-1 & NW4528230-2)		REF
- 1	MT5154/ARN504V	**	.BASE - TACAN RCVR-XMTR MOUNTING (MODIFIED PER C-12-114-000/CF-393)		1
- 2	MX5163/ARN504V	**	.ADAPTER - TACAN NAVIGATIONAL SET		1
- 3	RT5036/ARN504V	**	.RECEIVER-TRANSMITTER - TACAN		1
- 4	MT4781/ARN		.BASE - (V07216) (TYPE 390R2- VOR/ILS MOUNTING)		1
	MS24693-51		.SCREW		4
	AN960C8L		.WASHER		4
	MS21042L08		.NUT		4
R - 5	R5069/ARN508		.RECEIVER - (V07216) (TYPE V1R31A VOR/ILS) FOR BRKDN SEE C-57-386-000/MS-000		1
- 6	C74C47075-1		.BASE - IFF/SIF RCVR-XMTR MOUNTING (MOD)		1
	MS35207-265		.SCREW		8
	AN960C10L		.WASHER		8
	MS21044N3		.NUT		8
- 7	RT862A/APX77		.RECEIVER-TRANSMITTER - (V80249) (IFF/SIF) FOR BRKDN SEE C-59-122-A00/MY-000		1
	MT3513/APX		.BASE - (V80058) (IFF TEST SET MOUNTING)		1
	MS35207-265		.SCREW		4
	AN960C10L		.WASHER		4
	MS21044N3		.NUT		4
- 8	TS1843B/APX		.TEST SET - (V07214) (TRANSPONDER SET) FOR BRKDN SEE C-59-122-000/MS-000		1
	41A-51215		.ROTARY SEL & TB BRACKET INSTL - VOR/TACAN		NP
- 9	172934-001		.ROTARY SELECTOR - (V81840) (VOR/TACAN)		1
	41A-42101		ELECTRICAL & ELEK EQUIP INSTL - CENTRE FUS (MOD BY C-12-114-000/CD-031) (SEE SECTION 12)		REF
-10	AT256A/ARC		.ANTENNA - UHF (V78702)		1
	MS24694-54		.SCREW		8
R -11	M25708/1-01	******	.ANTENNA - (V82152) (TACAN)		1
	MS24693-28	****	.SCREW		6
	4601102-1	*****	ANTENNA RELOCATION - UHF		REF
	MS24693-273	*****	.SCREW (ATTACHING UHF ANTENNA)		8
	41A-51218	***	ANTENNA INSTL - GLIDE SLOPE (NOSE)		NP
-12	AS5071/ARN		.ANTENNA - (V07216) (GLIDE SLOPE)		1
	NAS1204-3		.SCREW		6
	41A-51219	***	ANTENNA INSTL - MARKER BEACON		NP
-13	AT640A/ARN		.ANTENNA - (V07216) (MARKER BEACON)		1
	AN502-10-8		.SCREW		8
	AN960D10		.WASHER		8
	41A-51216		ANTENNA INSTL - VOR/LOC (MODIFIED BY NW4528141-10) (IAW C-12-114-000/CD-031)		NP
-14	CV5116/ARN508		.HYBRID JUNCTION - (V07216) - (HYRNV) (SUPPLIED AS PART OF 0E5008/ARN508 ANTENNA SYSTEM (TYPE 837B-1))		1
	MS35206-215		.SCREW		4
	AN960D4L		.WASHER		4
-15	AS5084/ARN508		.ANTENNA ELEMENT - (V07216) (E1RNV & E2RNV) (SUPPLIED AS PART OF 0E5008/ARN508 ANTENNA SYSTEM (TYPE 837B-1))		2
	MS24694S53		.SCREW		12
	41A-42103-61		ELECTRICAL EQUIP INSTL - STBD WING (SEE SECTION 12)		REF
R -16	M25708/1-01	******	.ANTENNA - (V82152) (IFF/SIF)		1
	MS24693-28		.SCREW		6
		*	MODIFIED BY C-12-114-000/CF-373, & CD-030 & CD-031		
		**	FOR BRKDN SEE C-57-364-000/MY-000		
		***	IAW C-12-114-000/CD-031		
		****	FOR AIRCRAFT WITHOUT C-12-114-000/CD-046 INCORPORATED		
		*****	IAW C-12-114-000/CD-046		
R		******	M25708/1-01 REPLACES AT-741B/A, AT-741A/A AND AT-741/A		

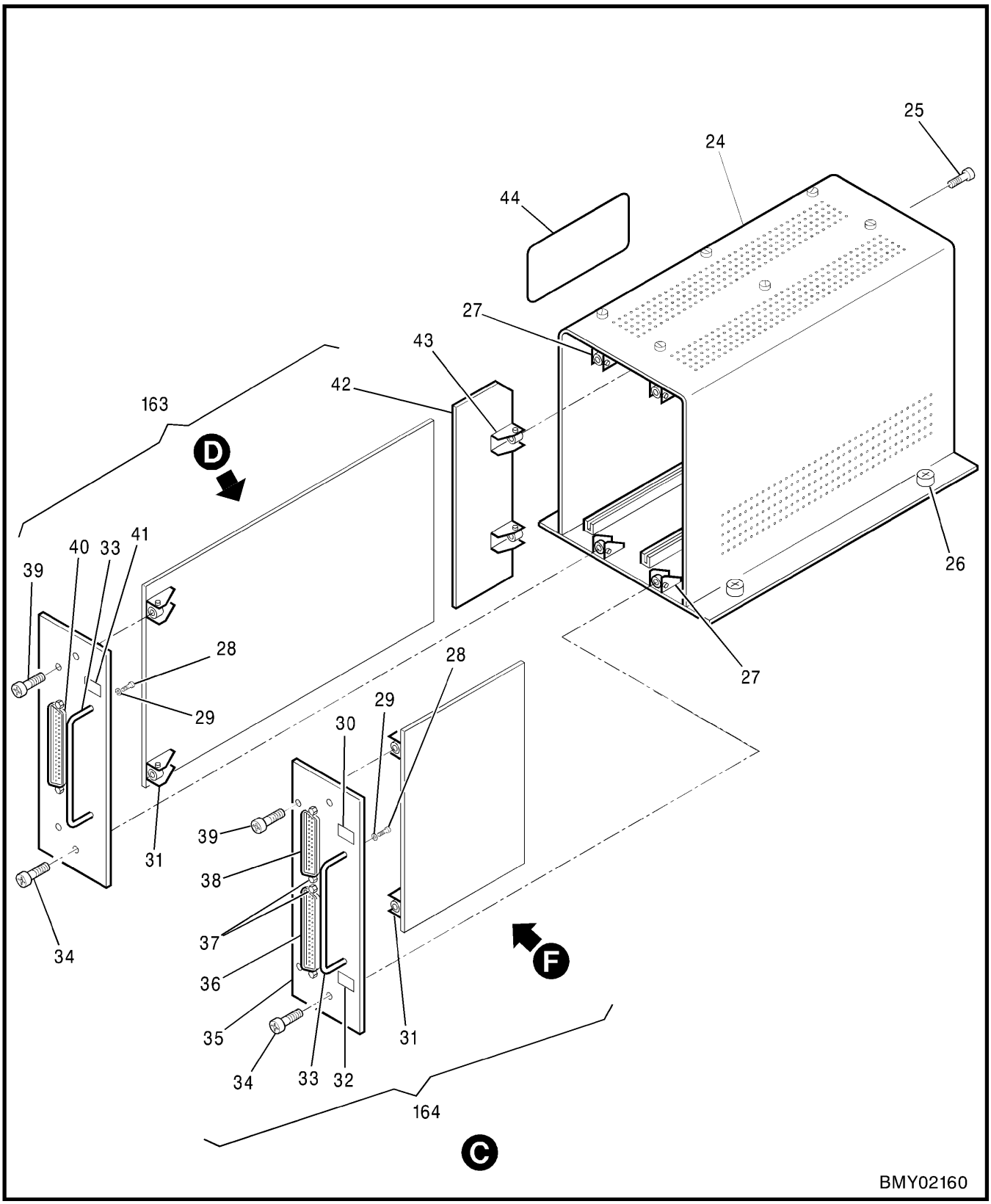

Figure 2-13-2 (Sheet 2 of 4) Nose Compartment Electronics & Antennas

	FIGURE AND INDEX NUMBER	GROUP ELECTRONIC EQUIPMENT MAJOR ASSEMBLY NOSE COMPARTMENT ELECTRONICS & ANTENNAS PART NUMBER		1 2 3 4 5 6 7 NOMENCLATURE	EFFEC-TIVITY	UNITS PER ASSY
	2-13-2 -	NW4528149-1		EQUIPMENT INSTL - AVIONICS BAY (FS 110 TO FS 149) (SEE SECTION 12)		NP
R	-17	RT-5048/ARC-511(V)		.VHF RECEIVER-TRANSMITTER RADIO (ALTERNATE P/N 622-1396-002, 622-1396-002CF-005, 622-1396-102 AND 622-1396-102CF-005)		1
R		K41A-58042-10		.BASE - VHF RCVR - XMTR MOUNTING (MADE FROM 622-1196-001) (M1RV) (V13499)		1
		MS25083-2BC5		.STRAP - BONDING		4
		41A-30030-2		.BALLAST - (REF TO C-12-114-000/CF-529)		1
		K41A-58042-12		.SPACER		2
		K41A-58043-8		.SPACER		2
		MS24693-S274		.SCREW		4
		NAS1149D0332K		.WASHER		4
		MS21042L3		.NUT - SELF-LOCKING		2
		HT1-10		.SHOCK MOUNT - (V76005)		4
		MS35276-269		.SCREW		16
		NAS1149D0332K		.WASHER		16
		MS35207-263	*	.SCREW		8
		AN960PD10L	*	.WASHER		8
	-18	K41A-58045-8		.PLATE ASSY		2
		MS24693-296		.SCREW		4
		NAS43HT4-18		.SPACER		4
		MS24693-S251		.SCREW		4
		HT1-10		.SHOCKMOUNT - (V76005)		4
		MS35207-269		.SCREW		16
		NAS1149D0332K		.WASHER		32
		MS25083-2BC5		.STRAP - BONDING		2
R	-19	RT-5078/ARC-164(V)		.UHF RECEIVER-TRANSMITTER RADIO		1
R		K41A-58043-20		.BASE - UHF TRANSCEIVER MOUNTING		REF
		MT4838ARC164		.MOUNTING BASE, ELECTRICAL EQUIPMENT		1
		MS35207-263		.SCREW		16
		NAS1149D0332K		.WASHER		16
	-20	B64-CB-10		.SHOCKMOUNT - (V81860)		4
		MS24693-S273		.SCREW		16
		NAS1149D0332K		.WASHER		16
		MS21042L3		.NUT		16
		K41A-58045-32		.PLATE		1
		K41A-58045-34		.SPACER		2
		MS24693-S274		.SCREW		6
		NAS1149D0332K		.WASHER		4
		MS21042L3		.NUT		4
		MS25083-2BC5		.STRAP - BONDING		2
	-21	B64-CB-10		.SHOCKMOUNT - (V81860)		4
		MS35207-263		.SCREW		16
		NAS1149D0332K		.WASHER		16
	-22	NW4528220-1		.BASEPLATE		1
	-23	MS35207-262		..SCREW		4
		NAS1149D0332J		..WASHER		4
	-24	NW4528458-1		.DISCRETE COMPONENT BOX (NOSE)		1
	-25	MS35206-213		..SCREW		2
	-26	PFSC35-38A		..STUD		4
	-27	NAS1033A08		..NUT		4
	-28	MS35206-228		..SCREW		4
	-29	MS35338-41		..WASHER		4
	-30	NW4528193-5		..LABEL - (J217)		1
	-31	MF-6301-04		..ANCHOR NUT		2
	-32	NW4528193-4		..LABEL - (J218)		1
	-33	MS39087-303		..HANDLE		2
	-34	MS35206-245		..SCREW		4
	-35	NW4528226-1		..FACE PLATE		1
	-36	DCU-37P		..CONNECTOR		1
			*	IAW C-12-114-000/CF-529		

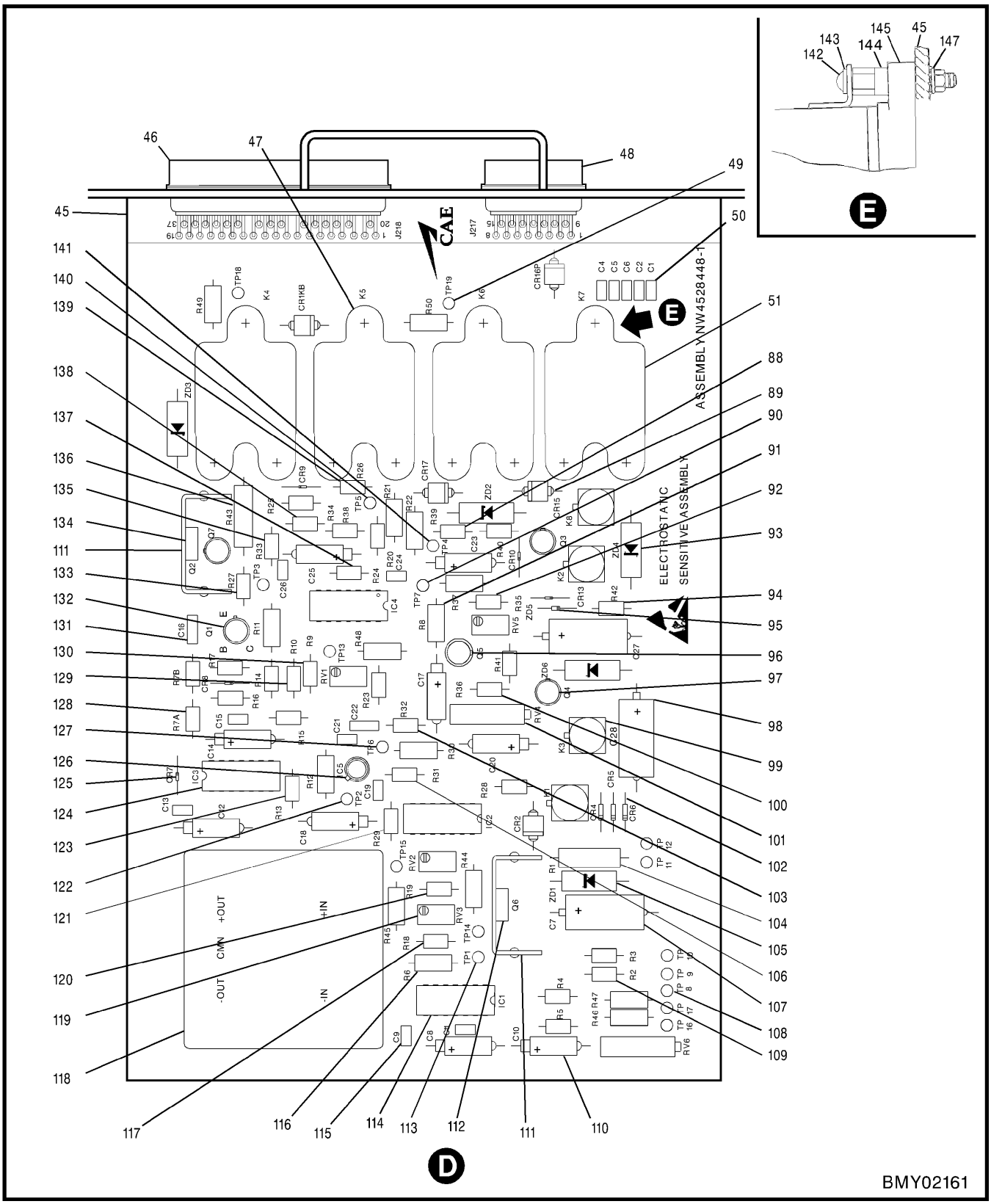

Figure 2-13-2 (Sheet 3 of 4) Nose Compartment Electronics & Antennas

FIGURE AND INDEX NUMBER	GROUP ELECTRONIC EQUIPMENT MAJOR ASSEMBLY NOSE COMPARTMENT ELECTRONICS & ANTENNAS PART NUMBER	1 2 3 4 5 6 7 NOMENCLATURE	EFFEC-TIVITY	UNITS PER ASSY
2-13-2 -37	D53018	..SLIDE LOCK		4
-38	DAU-15P	..CONNECTOR		1
-39	MS35206-215	..SCREW		4
-40	DCU-37P	..CONNECTOR		1
-41	NW4528193-3	..LABEL (J219)		1
-42	NW4528434-1	..DCB-PCB STOP		1
-43	F22A27M-22-40	..ANCHOR NUT		2
-44	NW4528205-2	..LABEL		1
-45	NW4528451-1	.PRINTED CIRCUIT BOARD		1
-46	DCU-37P	..CONNECTOR		1
	030-2086-000	...PIN		15
	030-2087-000	...PIN		19
-47	K-D4B-035	..RELAY		1
	RSN116140	...PCB SOCKET (K5PCB)		1
-48	DAU-15P	..CONNECTOR		1
	030-2086-000	...PIN		7
	030-2087-000	...PIN		8
-49	105-0856-001	..TEST JACK (TP3, TP12 & TP19)		3
-50	CK05BX102K	..CAPACITOR (C1, C2, C4, C5 & C6)		5
-51	MS27400-17	..RELAY (K4, K6 & K7)		3
	RSN116140	...PCB SOCKET (K4PCB, K6PCB & K7PCB)		3
	NW4528200-10	WIRING INSTL - AFT FUSELAGE (SEE SECTION 12)		REF
-52	NW4528026-1	.CABLE ASSY - COAXIAL		1
-53	M39012/02-0513	..CONNECTOR - (J1RNV)		1
-54	M39012/16-0503	..CONNECTOR - (P5RNV)		1
-55	NW4528026-2	.CABLE ASSY - COAXIAL		1
-56	M39012/20-0503	..CONNECTOR - (P1RNV)		1
-57	M39012/16-0503	..CONNECTOR - (P3RNV)		1
-58	NW4528026-3	.CABLE ASSY - COAXIAL		1
-59	M39012/20-0503	..CONNECTOR - (P2RNV)		1
-60	M39012/16-0503	..CONNECTOR - (P4RNV)		1
-61	MS35206-215	.SCREW		4
	NAS1149FN416P	.WASHER		8
	MS21042-04	.NUT		4
-62	MS21919WCH3	.CLAMP		11
-63	MS35206-245	.SCREW		2
	NAS1149FN816P	.WASHER		4
	MS21042-08	.NUT		2
-64	MS35206-251	.SCREW		1
-65	NAS43DD-3-64	.SPACER		1
	NAS1149FN816P	.WASHER		1
-66	MS21266-2	.GROMMET		AR
-67	MS35489-149	.GROMMET		1
	NW4528200-8	WIRING INSTL - LOWER FUSELAGE (SEE SECTION 12)		REF
-68	82-F1113	.GASKET - (V07700) TACAN ANTENNA		1
-69	82-F1115	.GASKET - (V07700) UHF ANTENNA		1
	NW4528200-7	WIRING INSTL - RH WING (SEE SECTION 12)		REF
-70	82-F1113	.GASKET - (V07700) IFF ANTENNA		1
	NW4528200-6	WIRING INSTL - RH WING FILLET (SEE SECTION 12)		REF
-71	NW4528404-4	.CABLE ASSY - COAXIAL (SEE SECTION 12)		REF
-72	UG-1213/U	..CONNECTOR - (V03554) (P101SX)		1
-73	622-6812-001 *	RECEIVER - ADF (V13499) (DF-206A)		1
		OR		
	622-6812-003 *	RECEIVER - ADF (V13499) (DF-206A)		1
	*	IAW C-12-114-000/CD-046		

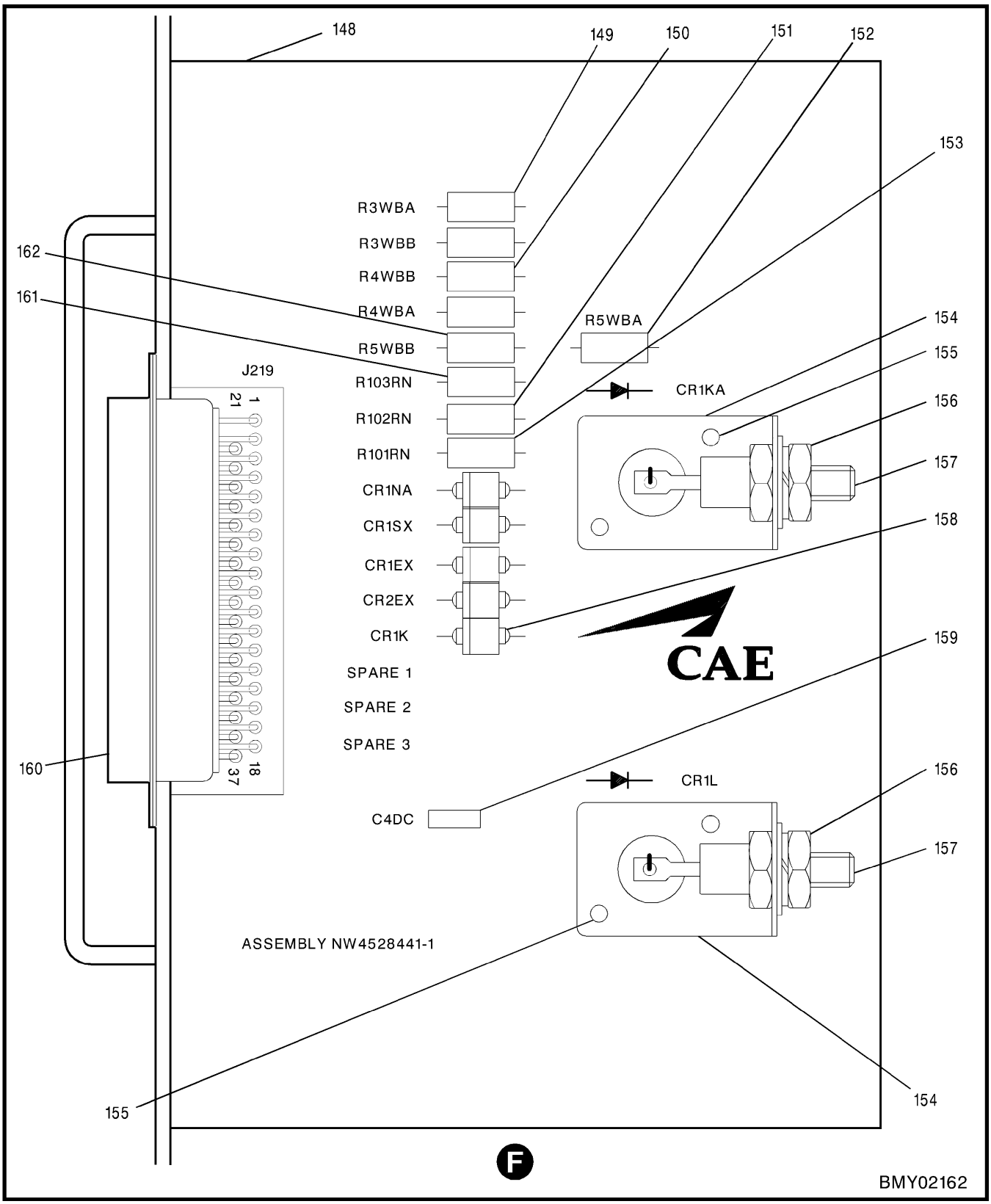

Figure 2-13-2 (Sheet 4 of 4) Nose Compartment Electronics & Antennas

FIGURE AND INDEX NUMBER	GROUP ELECTRONIC EQUIPMENT MAJOR ASSEMBLY NOSE COMPARTMENT ELECTRONICS & ANTENNAS PART NUMBER		1 2 3 4 5 6 7 NOMENCLATURE	EFFEC-TIVITY	UNITS PER ASSY
2-13-2 - 74	622-7210-002	**	BASE - ADF MOUNTING (V13499) (SEE FIG. 2-13-6)		REF
- 75	622-6820-001	**	ANTENNA - (V13499) (DFA-206A) (SEE FIG. 2-13-6)		REF
- 76	UG88D/U		PLUG - (P102SX IFF/SIF ANTENNA TEST DISC)		1
- 77	INST8-7		AMPLIFIER - COMPASS SIGNAL REPEATER (SEE SECTION 14)		REF
- 78	653278		AMPLIFIER - TYPE A-2/C (SEE SECTION 14)		REF
- 79	673447		GYRO - CONTROL DIRECTIONAL (SEE SECTION 14)		REF
- 80	SHC-P51	*	FILTER - (V38000)		1
- 81	MS21919WCH13	*	CLAMP		1
- 82	MS35207-264	*	SCREW		1
	AN960-10L	*	WASHER		1
	MS21042L3	*	NUT		1
- 83	M39012/16-0502		CONNECTOR - (P102RN) (SEE FIG. 2-13-3)		REF
- 84	M39012/17-0502		CONNECTOR - (P5103RN) (SEE FIG. 2-13-3)		REF
	41A-90971-1		EQUIPMENT INSTL - CANOPY (SEE SECTION 12)		REF
- 85	16-21B		.ANTENNA - (VHF)		1
	6930A/16-21B		.GASKET		1
- 86	MS35207-266		.SCREW		6
- 87	8927831-1		.FAIRING		1
- 88	RN55D1104F		..RESISTOR - (R15, R25 & R39)		3
- 89	1N5625		..DIODE - (CR1KB, CR2, CR17, CR15 & CR16P)		5
- 90	105-0862-001		..TEST JACK - (TP7 & TP15)		2
- 91	RN60D3900F		..RESISTOR - (R8)		1
- 92	RN55D7151F		..RESISTOR - (R35)		1
- 93	1N5364B		..ZENER DIODE - (ZD2, ZD3, ZD4 & ZD6)		4
	939-100		...SPACER		8
- 94	RN55D9091F		..RESISTOR - (R42)		1
- 95	1N758A		..ZENER DIODE - (ZD5)		1
- 96	2N3823		..TRANSISTOR - JFET		1
	112-040		...COMPONENT CARRIER		1
- 97	2N2222A		..TRANSISTOR - (Q3, Q4 & Q7)		3
	112-040		...COMPONENT CARRIER		1
- 98	CRS13E107K-L		..CAPACITOR - (C27 & C28)		2
- 99	M39016/15-081P		..RELAY - (K1, K2, K3 & K8)		4
	808-187		...SPREADER PAD		4
-100	FN55D7501F		..RESISTOR - (R36)		1
-101	3006P-1-104		..TRIM POTENTIOMETER - (RV4 & RV6)		2
-102	1N3613		..DIODE - (CR4, CR5 & CR6)		3
-103	RN55D3003F		..RESISTOR - (R32)		1
-104	RS-2B-270 OHM		..RESISTOR - (R1)		1
	939-100		...SPACER		2
-105	1N5361B		..ZENER DIODE - (ZD1)		1
	939-100		...SPACER		2
-106	RN55D1002F		..RESISTOR - (R31 & R40)		2
-107	CRS13G226K-L		..CAPACITOR - (C7)		1
-108	105-2203-205		..TEST JACK - (TP8)		1
-109	RN55D1103F		..RESISTOR - (R2, R3, R4 & R5)		4
-110	CRS13F565K-L		..CAPACITOR - (C8, C10, C12, C14, C17, C18, C20, C23 & C25)		9
-111	NW4528453-1		..HEATSINK ASSY - (Q2 & Q6)		2
	120		...THERMAL JOINT COMP		AR
	NAS1149DN416K		...WASHER		2
	MS35206-215		...SCREW		2
-112	MJE340		..TRANSISTOR - (Q6)		1
-113	105-0858-001		..TEST JACK - (TP1 & TP14)		2
-114	AD521SD		..INTEGRATED CIRCUIT - (1C1 & 1C2)		2
-115	CK05BX104K		..CAPACITOR - (C9, C11, C13, C15, C19, C21, C24 & C26)		8
-116	RN60D1001F		..RESISTOR - (R6, R11, R12, R21, R22, R30, R37, R44, R45, R46, R47, R48, R49 & R50)		14
		*	IAW C-12-114-000/CD-031		
		**	IAW C-12-114-000/CD-046		

FIGURE AND INDEX NUMBER	GROUP ELECTRONIC EQUIPMENT		EFFEC-TIVITY	UNITS PER ASSY
	MAJOR ASSEMBLY NOSE COMPARTMENT ELECTRONICS & ANTENNAS			
	PART NUMBER	1 2 3 4 5 6 7 NOMENCLATURE		
2-13-2 -117	RN55D1782F	..RESISTOR - (R18)		1
-118	24D15.200	..CONVERTER - (R18)		1
-119	3296W-1-102	..POTENTIOMETER -TRIM (RV1, RV2, RV3 & RV5)		4
-120	RN55D6041F	..RESISTOR - (R19)		1
-121	RN55D1003F	..RESISTOR - (R29)		1
-122	105-2202-205	..TEST JACK - (TP2 & TP13)		2
-123	RN55D2001F	..RESISTOR (R13 & R23)		2
-124	LM124J	..INTEGRATED CIRCUIT - (1C3 & 1C4)		2
-125	1N4148	..DIODE - (CR7, CR8, CR9, CR10 & CR13)		5
-126	LM113H	..VOLTAGE REGULATOR - (1C5)		1
	112-040	...COMPONENT CARRIER - (Q3CC, Q4CC, Q5CC, Q7CC & 1C5)		5
-127	105-2210-205	..TEST JACK - (TP5, TP9 & TP16)		3
-128	SFR25HJ-1M2	..RESISTOR - (R7A & R7B)		2
-129	RN55D8202F	..RESISTOR - (R10 & R20)		2
-130	RN55D1542F	..RESISTOR - (R9)		1
-131	CK06BX105K	..CAPACITOR - (C16 & C22)		2
-132	2N4238	..TRANSISTOR - (Q1)		1
	511-038	...COMPONENT CARRIER - (Q1CC)		1
-133	RN55D4992F	..RESISTOR - (R17, R27 & R41)		3
-134	MJE182	..TRANSISTOR - (Q2)		1
-135	RN55D3481F	..RESISTOR - (R33)		1
-136	RS-2B-4 OHM	..RESISTOR - (R43)		1
	939-100	...SPACER		2
-137	RN55D1000F	..RESISTOR - (R14, R24 & R38)		3
-138	RN55D5102F	..RESISTOR - (R34)		1
-139	RN55D4751F	..RESISTOR - (R16 & R26)		2
-140	105-2204-205	..TEST JACK - (TP5, TP10 & TP17)		3
-141	105-2207-205	..TEST JACK - (TP4, TP11 & TP18)		3
-142	MS35206-213	..SCREW		12
-143	AN935-04	..WASHER		12
-144	905-125	..SPACER		12
-145	RSN1165140	..SOCKET - PCB		4
-146	DELETED			
-147	NAS1149DN616K	..WASHER		12
-148	NW4528436-1	.CIRCUIT BOARD - PRINTED		1
-149	RN60D1001F	..RESISTOR - (R3WBA & R3WBB)		2
-150	RN60D1000F	..RESISTOR - (R4WBA & R4WBB)		2
-151	RN60D6810F	..RESISTOR - (R102RN)		1
-152	RN60D1100F	..RESISTOR - (R5WBA)		1
-153	RN60D2211F	..RESISTOR - (R101RN)		1
-154	NW4528438-1	..BRACKET		2
-155	MS20470AD3-4	..RIVET - SOLID		4
-156	MS21042-3	..NUT		2
	46-196	...LUG		2
	AN935-10	...WASHER		2
-157	1N1614	..DIODE - (CR1L & CR1KA)		2
-158	1N5625	..DIODE - (CR1NA, CR1EX, CR2EX, CR1K & CR1SX)		5
-159	CK06BX105K	..CAPACITOR - (C4DC)		2
-160	DCU-37P	...CONNECTOR - (J219)		1
	030-2086-000	...PIN		18
	030-2087-000	...PIN		17
-161	RN60D5600F	..RESISTOR - (R103RN)		1
-162	RN60D1651F	..RESISTOR - (R5WBB)		1
-163	NW4528441-1	PCB ASSY - INTERFACE NOSE		1
-164	NW4528448-1	PCB ASSY - SENSOR NETWORK		1
		-000-		

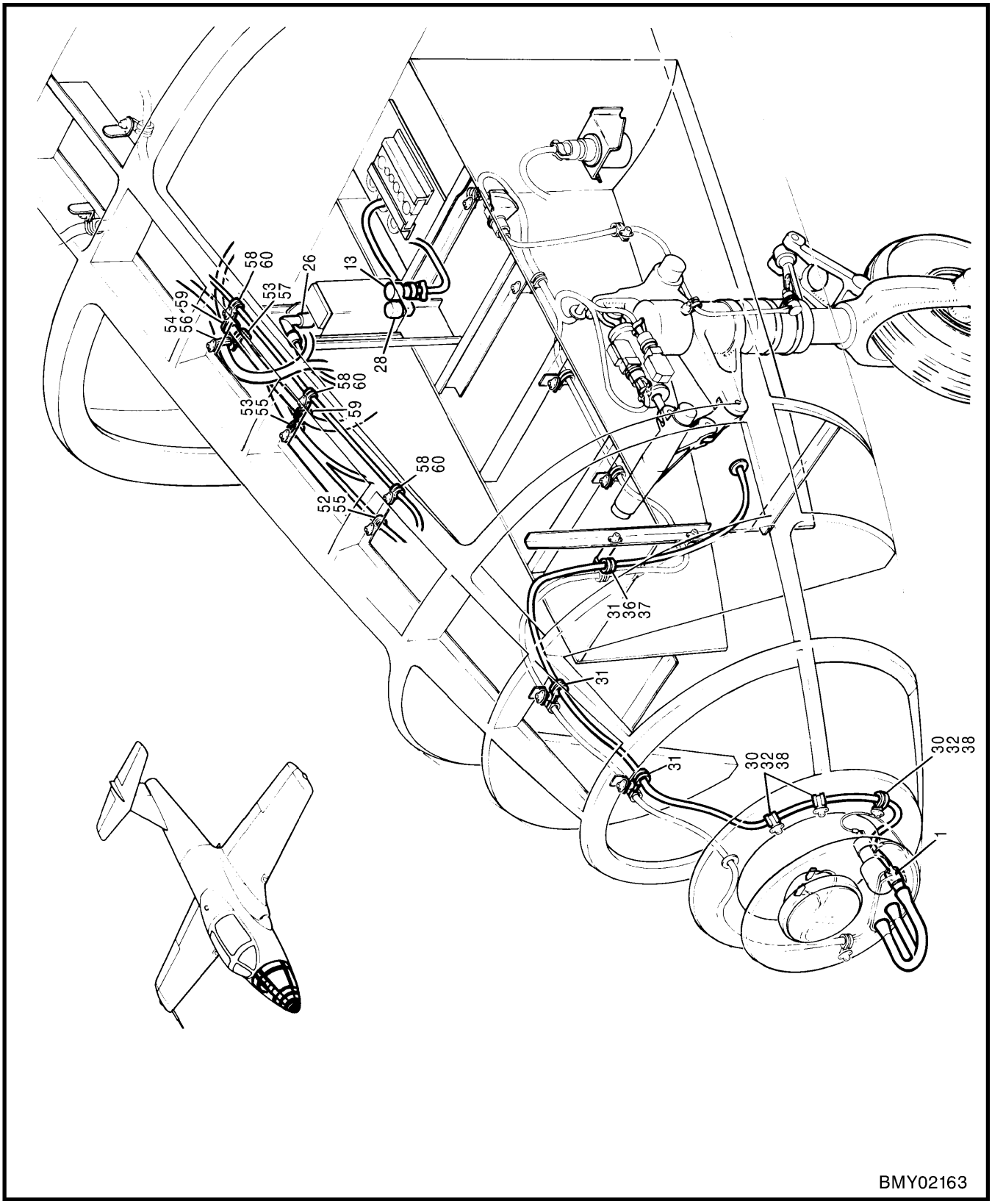

Figure 2-13-3 (Sheet 1 of 5) Nose Compartment Electronic Harnesses

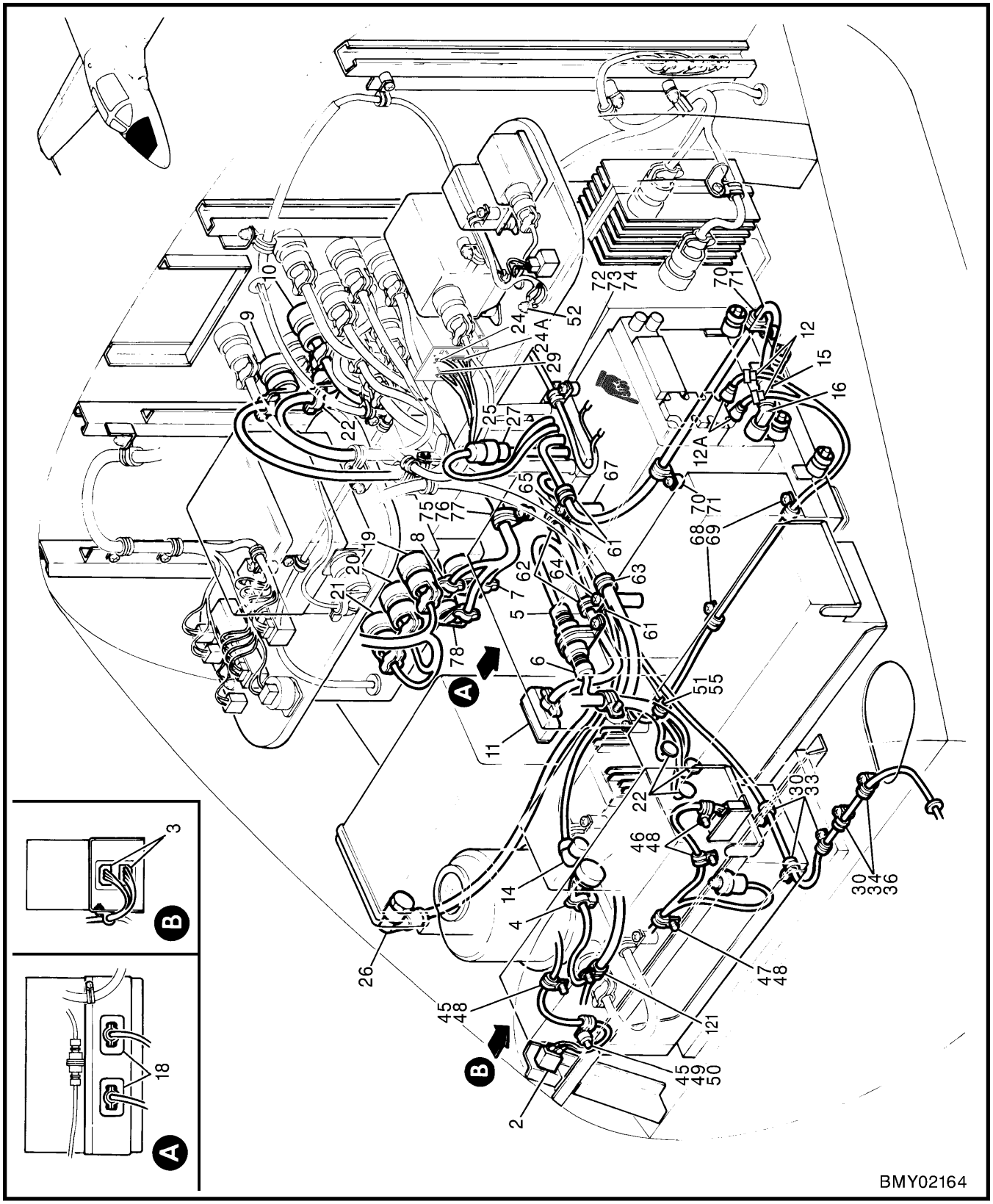

Figure 2-13-3 (Sheet 2 of 5) Nose Compartment Electronic Harnesses

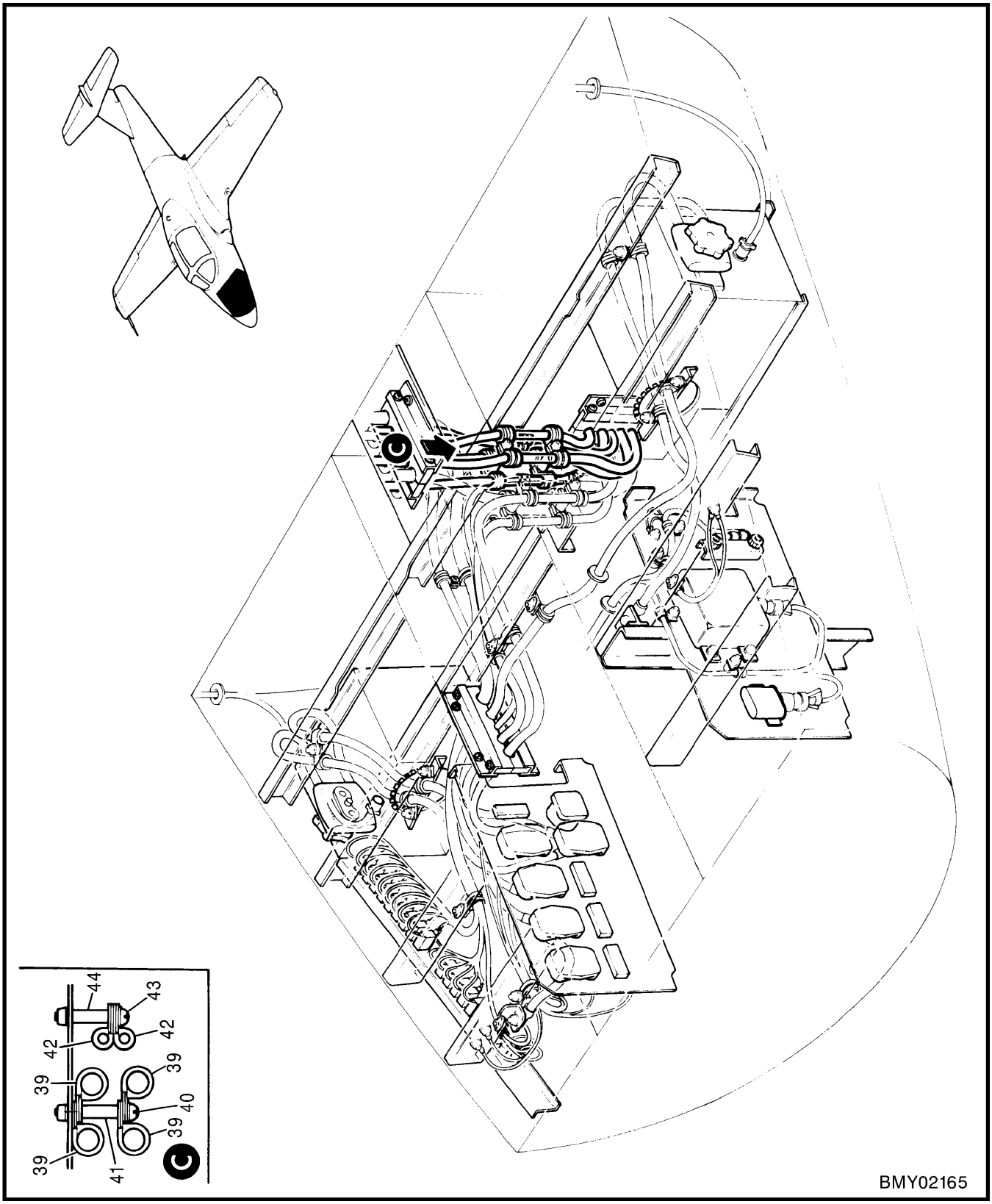

Figure 2-13-3 (Sheet 3 of 5) Nose Compartment Electronic Harnesses

FIGURE AND INDEX NUMBER	GROUP ELECTRONIC EQUIPMENT MAJOR ASSEMBLY NOSE COMPARTMENT ELECTRONIC HARNESSES PART NUMBER	1 2 3 4 5 6 7 NOMENCLATURE	EFFEC-TIVITY	UNITS PER ASSY
2-13-3 -	NW4528200-1	WIRING INSTL - NOSE (SEE SECTION 12)		REF
	NW4528404-1	.CABLE ASSY - COAXIAL		REF
	NW4528409-1	.HARNESS ASSY - NOSE		NP
	NW4528321-1	.HARNESS ASSY - NOSE		NP
	NW4528410-1	.HARNESS ASSY - NOSE		NP
	NW4528324-1	.HARNESS ASSY - NOSE, FUSELAGE		NP
- 1	M39012/01-0504	..CONNECTOR - (P13RNV)		1
	NW4528409-1	.HARNESS ASSY - NOSE		1
- 2	MS35059-30	..SWITCH - SEAT EJECTION TEST (S2RU)		1
- 3	DPX2ME-A40W1SA40W1S-33B	..CONNECTOR - (V71468) (P1ARV & P2ARV) (COMPLETE PART NUMBER: DPX2ME-A40W1SA40W1S-33B-0203)		2
- 4	MS27473T18F-32S	..CONNECTOR - (P7RU)		1
	M85049/49-2-18N	..BACKSHELL		1
- 5	M39012/16-0502	..CONNECTOR - (P102RN)		1
- 6	M39012/17-0502	..CONNECTOR - (P5103RN)		1
- 7	MS3476L24-61S	..CONNECTOR - (P205)		1
	M85049/51-S-24N	..BACKSHELL		1
- 8	MS3476L24-31S	..CONNECTOR - (P212)		1
	M85049/31-S-24N	..BACKSHELL		1
- 9	MS3476L24-61PX	..CONNECTOR - (P28)		1
	M85049/51-24N	..BACKSHELL		1
- 10	MS3476L20-41P	..CONNECTOR - (P2RV & P26)		2
	M85049/52-S-20N	..BACKSHELL		2
- 11	DPJM59C10-34A	..CONNECTOR - (V71468) (P4SX)		1
- 12	M39012/16-0502	..CONNECTOR - (P103RN & P5102RN)		2
R -12A	M55339/14-00306 *	..CONNECTOR - 90° BNC (P104RN & P5101RN)		2
- 13	M83723/75R1212N	..CONNECTOR - (P8SX)		1
	M85049/52-S-12N	..BACKSHELL		1
	NW4528026-8	.CABLE ASSY - CO-AXIAL		1
- 14	M39012/05-0501	..CONNECTOR - (P109RU)		1
	NW4528026-9	.CABLE ASSY - CO-AXIAL		1
- 15	UG-59B/U	..CONNECTOR - (V03554) (P101RN)		1
- 16	UG212C/U	..RIGHT-ANGLE CONNECTOR - (P107RN)		1
- 17	82-856	..RIGHT-ANGLE CONNECTOR - (V74868) (P105RN)		1
	NW4528321-1	.HARNESS ASSY - NOSE (SEE SECTION 12)		REF
- 18	DPAME-32-33S	..CONNECTOR - (V71468) (P3RN & P4RN)		2
- 19	MS3476L20-41S	..CONNECTOR - (P1RNA)		1
- 20	MS3476L20-41W	..CONNECTOR - (P2RNA)		1
	M85049/52-S-20N	..BACKSHELL		1
- 21	MS3476L20-41SX	..CONNECTOR - (P3RNA)		1
	M85049/52-S-20N	..BACKSHELL		3
- 22	634-4193-004	..CONNECTOR - (V13499) (P10RNV, P11RNV & P12RNV)		3
- 23	MS3476L24-61PW	..CONNECTOR - (P24)		1
	M85049/51-24N	..BACKSHELL		1
- 24	117RR-A15S	.D-SUBMINIATURE CONNECTOR (03554) (P217) NW4528321-10		1
	DA-51220-1	..LOCKING DEVICE (03554) NW4528321-3		1
	NW4528456-2	..BOOT ASSEMBLY (35598) NW4528321-19		1
	GTS-10-00-1-25	..SEAL (06090) NW4528321-32		1
-24A	117RR-C37S	.D-SUBMINIATURE CONNECTOR (03554) (P218) NW4528321-15		1
	DC-51222-1	..LOCKING DEVICE (03554) NW4528321-12		1
	NW4528456-4	..BOOT ASSEMBLY (35598) NW4528321-29		1
	GTS-10-00-1-25	..SEAL (06090) NW4528321-32		1
	D110278	..LOCKING DEVICE MIL-C-85049/48-2-4 NW4528321-27		1
- 25	M39012/02-0503	..CONNECTOR - (J2RNV)		1
	NW4528321-22	.HARNESS ASSY - NOSE		NP
- 26	AVL45-040	..CONNECTOR - (V04073) (P5SX & P6SX)		2
	NW4528404-11	.CABLE ASSY - CO-AXIAL		1
- 27	M39012/01-0501	..CONNECTOR - (P9RNV)		1
	NW4528403-1	.CABLE ASSY - CO-AXIAL		1
- 28	M39012/05-0501	..CONNECTOR - (P7SX)		1
	NW4528404-4	.CABLE ASSY - CO-AXIAL		REF
	*	IAW C-12-114-000/CF-553		

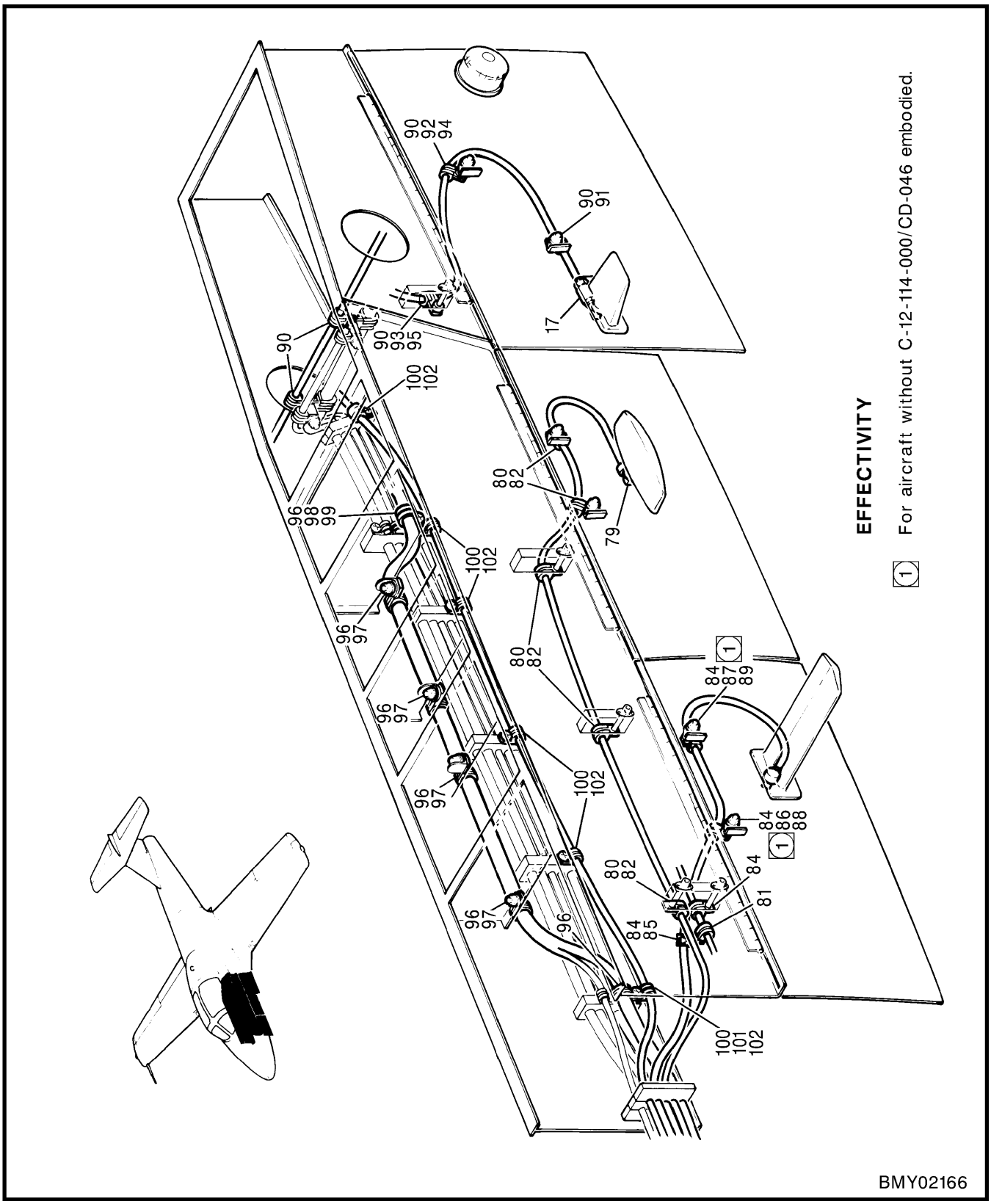

Figure 2-13-3 (Sheet 4 of 5) Nose Compartment Electronic Harnesses

	FIGURE AND INDEX NUMBER	GROUP ELECTRONIC EQUIPMENT MAJOR ASSEMBLY NOSE COMPARTMENT ELECTRONIC HARNESSES PART NUMBER	1 2 3 4 5 6 7 NOMENCLATURE	EFFEC-TIVITY	UNITS PER ASSY
R	2-13-3 -29	117RR-C37S	.D-SUBMINIATURE CONNECTOR (03554) (P219) NW4528321-15		1
R		DC-51222-1	..LOCKING DEVICE (03554) NW4528321-12		1
R		NW4528456-4	..BOOT ASSEMBLY (35598) NW4528321-29		1
R		GTS-10-00-1-25	..SEAL (06090) NW4528321-32		1
R		D110278	..LOCKING DEVICE MIL-C-85049/48-2-4 NW4528321-27		1
	-30	MS21919WDG3	.CLAMP		8
	-31	MS21919WDG4	.CLAMP		3
	-32	MS35206-245	.SCREW		2
	-33	MS35206-249	.SCREW		1
	-34	MS35206-250	.SCREW		2
	-35	MS35206-251	.SCREW		1
	-36	NAS43DD-3-48	.SPACER		2
	-37	NAS43DD-3-64	.SPACER		1
	-38	NAS1149FN816P	.WASHER		9
		MS21042-08	.NUT		3
	-39	MS21919WDG7	.CLAMP		4
	-40	MS35206-251	.SCREW		1
	-41	NAS43DD-3-48	.SPACER		1
		NAS1149FN816P	.WASHER		1
	-42	MS21919WDG2	.CLAMP		2
	-43	MS35206-250	.SCREW		1
	-44	NAS43DD-3-48	.SPACER		1
		NAS1149FN816P	.WASHER		1
	-45	MS21919WDG2	.CLAMP		2
	-46	MS21919WDG3	.CLAMP		2
	-47	MS21919WDG5	.CLAMP		1
	-48	MS35206-245	.SCREW		4
	-49	MS35206-250	.SCREW		1
	-50	NAS43DD-3-48	.SPACER		1
		NAS1149FN816P	.WASHER		5
	-51	MS21919WDG4	.CLAMP		1
	-52	MS21919WDG6	.CLAMP		1
	-53	MS21919WDG9	.CLAMP		2
	-54	MS21919WDG11	.CLAMP		2
	-55	MS35206-245	.SCREW		4
	-56	MS35206-251	.SCREW		1
	-57	NAS43DD-3-64	.SPACER		1
		NAS1149FN816P	.WASHER		5
		MS21042-08	.NUT		1
	-58	MS21919WDG7	.CLAMP		3
	-59	MS21919WDG9	.CLAMP		2
	-60	MS35206-245	.SCREW		3
		NAS1149FN816P	.WASHER		3
	-61	MS21919WDG6	.CLAMP		3
	-62	MS21919WDG8	.CLAMP		2
	-63	MS21919WDG10	.CLAMP		1
	-64	MS35206-250	.SCREW		1
	-65	MS35206-251	.SCREW		1
	-66	NAS43DD-3-32	.SPACER		1
	-67	NAS43DD-3-48	.SPACER		1
		NAS1149FN816P	.WASHER		2
	-68	MS21919WDG4	.CLAMP		2
	-69	MS35206-245	.SCREW		2
		NAS1149FN816P	.WASHER		2
	-70	MS21919WDG8	.CLAMP		2
	-71	MS35206-247	.SCREW		2
		NAS43DD-3-16	.SPACER		2
		NAS1149FN816P	.WASHER		2
	-72	MS21919WDG3	.CLAMP		1
	-73	MS35206-245	.SCREW		1
	-74	NAS43DD-3-48	.SPACER		1
		NAS1149FN816P	.WASHER		1
	-75	MS21919WDG11	.CLAMP		1

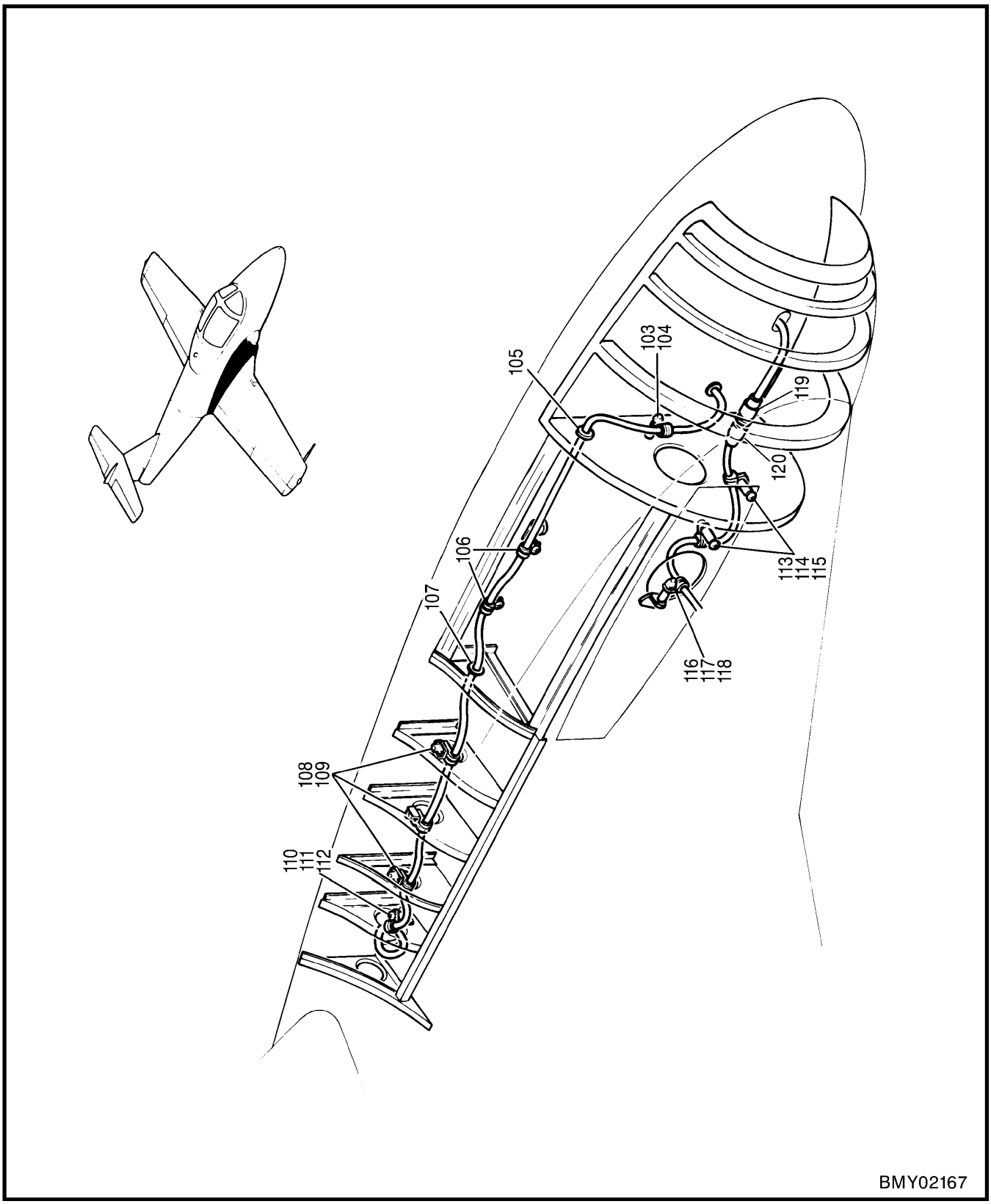

Figure 2-13-3 (Sheet 5 of 5) Nose Compartment Electronic Harnesses

FIGURE AND INDEX NUMBER	GROUP ELECTRONIC EQUIPMENT MAJOR ASSEMBLY NOSE COMPARTMENT ELECTRONIC HARNESSES PART NUMBER	1 2 3 4 5 6 7 NOMENCLATURE	EFFEC-TIVITY	UNITS PER ASSY
2-13-3 - 76	MS35206-249	.SCREW		1
- 77	NAS43DD-3-32	.SPACER		1
	NAS1149F0332P	.WASHER		1
	T50F	.WRAP - SPIRAL (V06383)		AR
	NW4528200-2	WIRING INSTL - COCKPIT (SEE SECTION 12)		REF
	NW4528321-1	.HARNESS ASSY - CENTRE COCKPIT (SEE SECTION 12)		REF
- 78	DCU-37P	..CONNECTOR - (P218)		1
-	NW4528200-8	WIRING INSTL - LOWER FUSELAGE (SEE SECTION 12)		REF
	NW4528404-1	.CABLE ASSY - COAXIAL		1
- 79	KD-59-67	..CONNECTOR - (V91836) (P7RNV)		1
- 80	MS21919WDG4	.CLAMP		5
- 81	MS21919WDG6	.CLAMP		1
- 82	MS35207-269	.SCREW		3
- 83	MS35206-245	.SCREW		2
	NAS1149F0332P	.WASHER		3
	NAS1149FN816P	.WASHER		4
	MS21042-08	.NUT		2
- 84	MS21919WDG7	.CLAMP		3
- 85	MS35206-245	.SCREW		1
- 86	MS35206-251	.SCREW		1
- 87	MS35206-249	.SCREW		1
- 88	NAS43DD-3-64	.SPACER		1
- 89	NAS43DD-3-40	.SPACER		1
	NAS1149FN816P	.WASHER		6
	MS21042-08	.NUT		3
- 90	MS21919WDG7	.CLAMP		5
- 91	MS35206-245	.SCREW		1
- 92	MS35206-248	.SCREW		1
- 93	MS35207-270	.SCREW		1
- 94	NAS43DD-3-28	.SPACER		1
- 95	NAS43DD-3-36	.SPACER		1
	NAS1149FN816P	.WASHER		4
	MS21042-08	.NUT		2
- 96	MS21919WDG11	.CLAMP		6
- 97	MS35206-245	.SCREW		4
- 98	MS35206-252	.SCREW		1
- 99	NAS43DD-3-16	.SPACER		1
	NAS1149FN816P	.WASHER		9
	MS21042-08	.NUT		4
-100	MS21919WDG7	.CLAMP		6
-101	MS21919WDG4	.CLAMP		1
-102	MS35206-251	.SCREW		7
	NAS1149FN816P	.WASHER		7
	NW4528200-6	WIRING INSTL - RH WING FILLET (SEE SECTION 12)		REF
-103	MS21919WDG7	.CLAMP		2
-104	MS35206-251	.SCREW		1
	NAS43DD-3-56	.SPACER		1
	NAS1149FN816P	.WASHER		3
	MS35338-42	.WASHER		1
	MS35649-282	.NUT		1
	MS21042-06	.NUT		1
-105	MS35489-11	.GROMMET		1
-106	MS21919WDG7	.CLAMP		2
-107	MS35489-12	.GROMMET		1
-108	MS21919WDG7	.CLAMP		3
-109	MS35206-245	.SCREW		3
	NAS1149FN816P	.WASHER		3
-110	MS21919WDG7	.CLAMP		1
-111	MS35206-249	.SCREW		1
-112	NAS43DD-3-32	.SPACER		1
	NAS1149FN816P	.WASHER		1
-113	MS21919WDG6	.CLAMP		2
-114	MS35206-250	.SCREW		2

FIGURE AND INDEX NUMBER	GROUP ELECTRONIC EQUIPMENT MAJOR ASSEMBLY NOSE COMPARTMENT ELECTRONIC HARNESSES PART NUMBER		1 2 3 4 5 6 7 NOMENCLATURE	EFFEC-TIVITY	UNITS PER ASSY
2-13-3 -115	NAS43DD-3-48		.SPACER		2
	NAS1149FN816P		.WASHER		6
	MS35338-42		.WASHER		2
	MS35649-282		.NUT		2
	MS21042-08		.NUT		2
-116	MS21919WDG7		.CLAMP		1
-117	MS35206-332		.SCREW		1
-118	NAS43DD-3-24		.SPACER		1
	NAS1149FN816P		.WASHER		3
	MS35338-42		.WASHER		1
	MS35649-282		.NUT		1
	MS21042-08		.NUT		1
	NW4528200-1		WIRING INSTL - NOSE (SEE SECTION 12)		REF
	NW4528404-6		.CABLE ASSY - COAXIAL		REF
-119	M39012/01-0501		..CONNECTOR - (P112SX) (SEE SECTION 12)		1
	NW4528200-6		.WIRING INSTL - RH WING FILLET (SEE SECTION 12)		REF
	NW4528404-4		.CABLE ASSY - COAXIAL (SEE SECTION 12)		1
-120	M39012/01-0501		..CONNECTOR - (P111SX)		1
-121	MS21919WDG5	*	.CLAMP		1
	AN960-8	*	.WASHER		1
	MS21919WDG8	*	.CLAMP		1
			-000-		
		*	IAW C-12-114-000/CF-529		

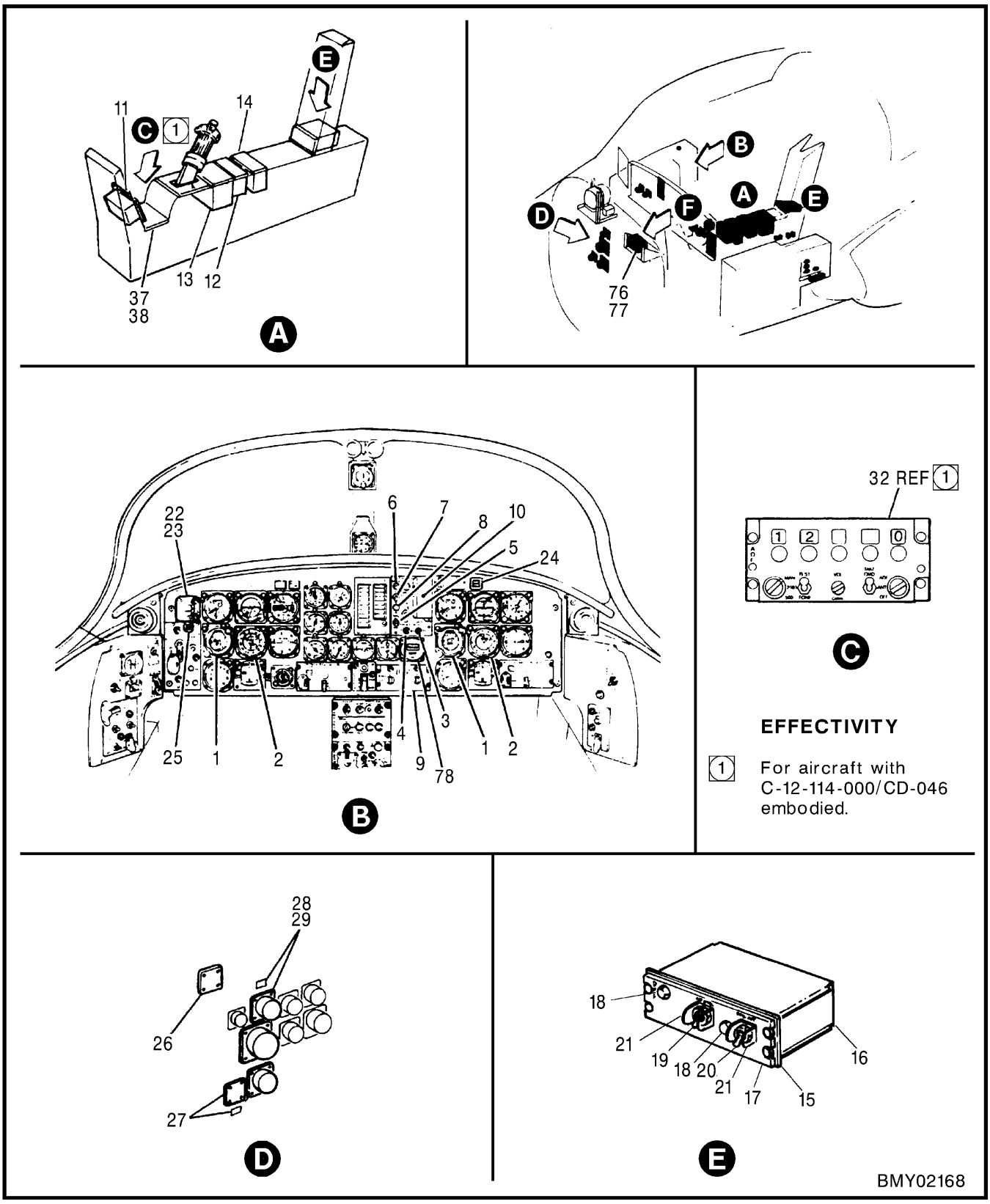

Figure 2-13-4 (Sheet 1 of 3) Cockpit Electronic Equipment

FIGURE AND INDEX NUMBER	GROUP ELECTRONIC EQUIPMENT MAJOR ASSEMBLY COCKPIT ELECTRONIC EQUIPMENT PART NUMBER	1 2 3 4 5 6 7 NOMENCLATURE	EFFEC-TIVITY	UNITS PER ASSY
2-13-4 -	C72D47119-1	PANEL ASSY - PILOT INSTRUMENT (MODIFIED BY 41A-90962-1) (SEE SECTION 14)		REF
R - 1	MN97HA4WL	.INDICATOR - (V05257) (TACAN COURSE)		2
	S1445	.FIXTURE - (V88308) (LIGHTING)		2
	MS25237-327	.LAMP		2
	MS24693-33	.SCREW		2
	MS35214-31	.SCREW		2
	AN960D8L	.WASHER		4
	NAS487-15	.NUT		4
- 2	ID5040C/ARN	.INDICATOR - (V07213) (TACAN DRM)		2
		OR		
	ID5040D/ARN	.INDICATOR - (TACAN DRMI)		
	20-0084-1C	.FIXTURE - (V72914) (LIGHTING) (TOP LH MTG HOLE)		2
	20-0084-2C	.FIXTURE - (V72914) (LIGHTING) (TOP RH MTG HOLE)		2
	MS25237-327	.LAMP		4
	MS24693-32	.SCREW		4
	MS35214-31	.SCREW		4
	AN960D8L	.WASHER		8
	NAS487-15	.NUT		8
- 3	MS24523-23	.SWITCH - (VOR/ILS - TACAN SELECTOR)		1
- 4	MS35058-22	.SWITCH - (TACAN COURSE SELECTOR)		1
- 5	MS25201-7	.SWITCH - (MARKER SENS)		1
- 6	MS25041-1	.LIGHT ASSY - (MKR/BCN INDICATOR AIRWAYS)		1
- 7	MS25041-10	.LIGHT ASSY - (MKR/BCN INDICATOR OUTER)		1
- 8	MS25041-4	.LIGHT ASSY - (MKR/BCN INDICATOR MIDDLE)		1
	MS25237-328	.LAMP		3
- 9	522-2447-552	.PANEL - (V07216) (VOR/ILS CONTROL) (C5318 A/R)		1
	41A-42200	ELECTRICAL EQUIP INSTL - COCKPIT (SEE SECTION 12)		REF
-10	NO NUMBER *	.HOLDER - FREQUENCY CARD	A	1
	NO NUMBER *	.CARD - UHF COMMUNICATION FREQUENCIES	A	1
	41A-52015	.ELECTRICAL EQUIP INSTL - CTR CONSOLE (MOD BY C-12-114-000/CF-373 & CD-030) (SEE SECTION 12)		REF
-11	C5287/ARN504V	..CONTROL - TACAN (TACAN) FOR BRKDN SEE C-57-364-000/MY-000		1
-12	5071-1-1/AIC-504	..CONTROL - (V81574) (INTERCOM DUAL) (IAW K41A-58041-2) FOR BRKDN SEE C-50-323-000/MS-001		1
-13	706643-802CF004/ARC164	..CONTROL - (V07216) (UHF RADIO) (IAW 41A-90906) FOR BRKDN SEE C-50-254-000/MS-001		1
		OR		
	706643-802CF-018	..CONTROL - (UHF RADIO)		1
-14	C6280P/APX	..CONTROL - (V80249) (IFF/SIF) FOR BRKDN SEE C-59-107-000/MS-000		1
	41A-90906-9	..PANEL ASSY - AUXILIARY OVERRIDE		1
	41A-72070	...PANEL & COVER ASSY		1
-15	41A-72070-2	....PANEL ASSY - MOUNTING		1
	PFSC3-1/2-38	....FASTENER - (V72794)		4
-16	41A-72070-6	....COVER		1
	MS35206-217	....SCREW		1
	AN960D4L	....WASHER		1
-17	NW4528263-1	...PANEL - EDGE LIGHTED PLASTIC		1
	AN515PB6R8	...SCREW		2
	S1426-6	...WASHER - (V88308)		2
-18	MS25010B12A	...LIGHT ASSY		2
	MS25237-327	...LAMP		2
	A	FOR AIRCRAFT WITHOUT C-12-114-000/CD-046 EMBODIED		
	*	IAW C-12-114-000/CF-400		

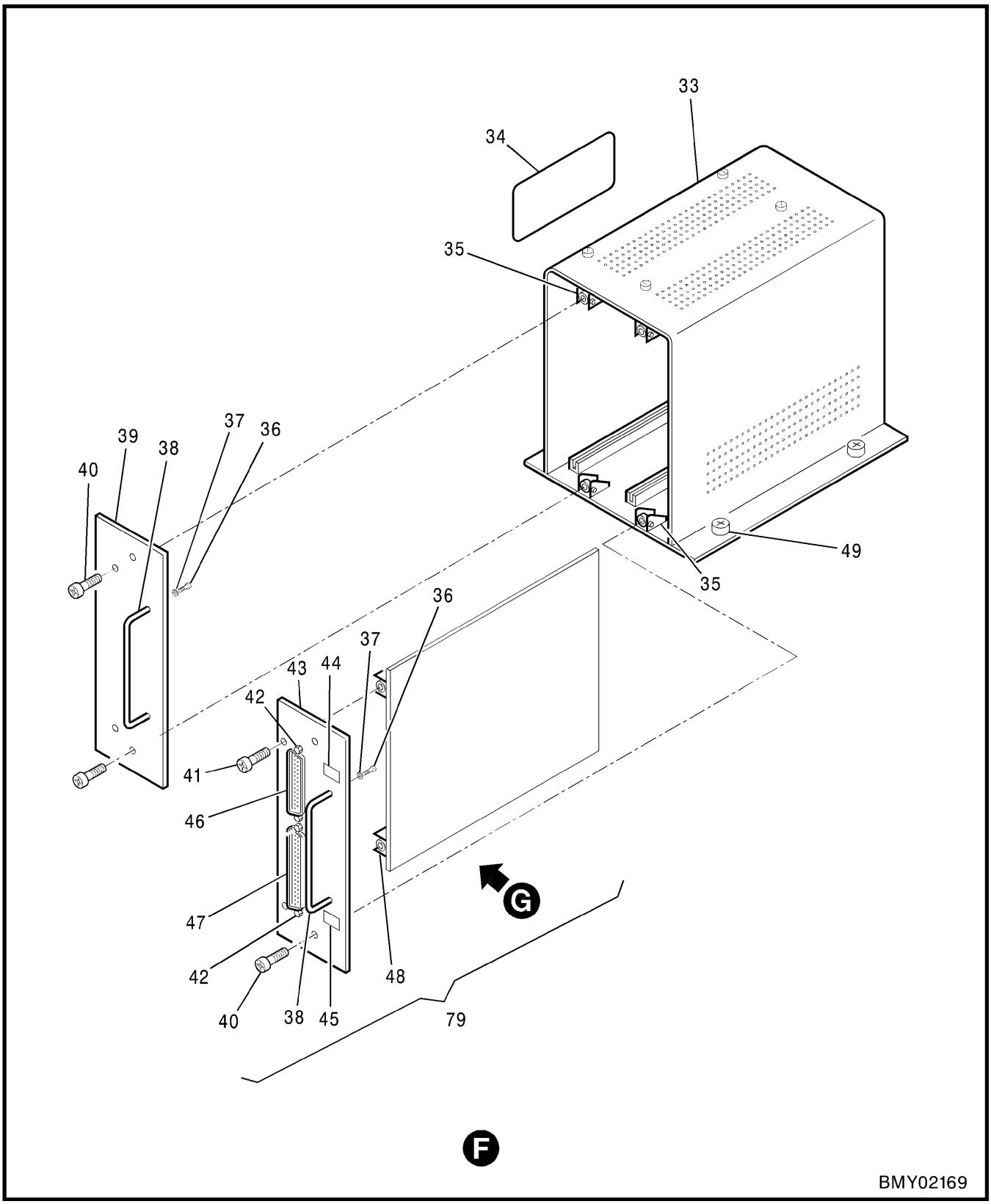

Figure 2-13-4 (Sheet 2 of 3) Cockpit Electronic Equipment

FIGURE AND INDEX NUMBER	GROUP ELECTRONIC EQUIPMENT MAJOR ASSEMBLY COCKPIT ELECTRONIC EQUIPMENT PART NUMBER		1 2 3 4 5 6 7 NOMENCLATURE	EFFEC-TIVITY	UNITS PER ASSY
2-13-4 -19	MS25306-232		...SWITCH - (CURRENT SENSE)		1
-20	MS35059-23		...SWITCH - (AUXILIARY)		1
-21	NO NUMBER		...GUARD - SWITCH		2
	MS35333-112		...LOCK WASHER		4
	MS25082-21		...NUT		4
	AN960D816L		...WASHER		AR
	NW4528201-1		GENERAL ARRANGEMENT - CT114 REWIRE (SEE SECTION 12)	A	REF
	NW4528201-2		GENERAL ARRANGEMENT - CT114 REWIRE (SEE SECTION 12)	B	REF
	41A-90963-1		.EQUIPMENT INSTL - INSTRUMENT PANEL (FRONT FACE)		NP
-22	245-976054-000		..SELECTOR - UHF CHANNEL (90073)		1
-23	MS35214-42		..SCREW		3
	AN960D8L		..WASHER		3
-24	95-41-52-B6-57145		..SWITCH - (V32245)		1
-25	MS25089-3C		..SWITCH		1
	NW4528230-1		EQUIPMENT INSTL - AVIONICS BAY (SEE SECTION 12)	A	REF
	NW4528230-2		EQUIPMENT INSTL - AVIONICS BAY (SEE SECTION 12)	B	REF
-26	MS3181-18CA		.COVER		1
-27	MS3181-20CA		.COVER		1
	41A-90904-340		.LABEL - (J2RU)		1
-28	MS3119E20-41		.RECEPTACLE - (J2RV)		1
	10-101949-20		.GASKET - (V77820)		1
	41A-90904-368		.LABEL - (J2RV)		2
-29	MS35206-217		.SCREW		4
	NAS1149DN432K		.WASHER		4
	MS21042-L04		.NUT		4
	NW4515200-1		COMMON INSTL - GENL ARGT (SEE SECTION 1 & 12)		REF
	NW4515001-1		.BLANKING PLATE INSTL - CTR CSL (NON ADF CKPT)		NP
-30	NW4515002-1		..PLATE - BLANKING		1
-31	PFSC31/2-38A		...STUD ASSY - (V72794)		4
-32	622-6813-001	*	CONTROLLER - ADF (DFC-206A) (SEE FIG. 2-13-06)		REF
			OR		
	622-6813-003	*	CONTROLLER - ADF (DFC-206A) (SEE FIG. 2-13-06)		REF
	NW4528462-1		BOX INSTL - DISCRETE COMPONENTS (COCKPIT) (SEE SECTION 12)		NP
-33	NW4528458-2		.DISCRETE COMPONENT BOX (COCKPIT)		1
-34	NW4528206-2		..LABEL		1
-35	NAS1033A08		..NUT		4
-36	MS35206-228		..SCREW		4
-37	MS35338-41		..WASHER		4
-38	MS39087-303		..HANDLE		2
-39	NW4528223-1		..FACE PLATE		1
-40	MS35206-245		..SCREW		4
-41	MS35206-215		..SCREW		2
-42	D53018		..SLIDE LOCK		4
-43	NW4528228-1		..FACE PLATE		1
-44	NW4528193-6		..LABEL - (J221)		1
-45	NW4528193-7		..LABEL - (J222)		1
	NW4528320-1		HARNESS ASSY - CENTRE COCKPIT (SEE SECTION 12)		REF
-46	M24308/4-5		..CONNECTOR		1
-47	M24308/4-4		..CONNECTOR		1
		*	IAW C-12-114-000/CD-046		
		A	FOR AIRCRAFT CT114102		
		B	FOR FLEET		

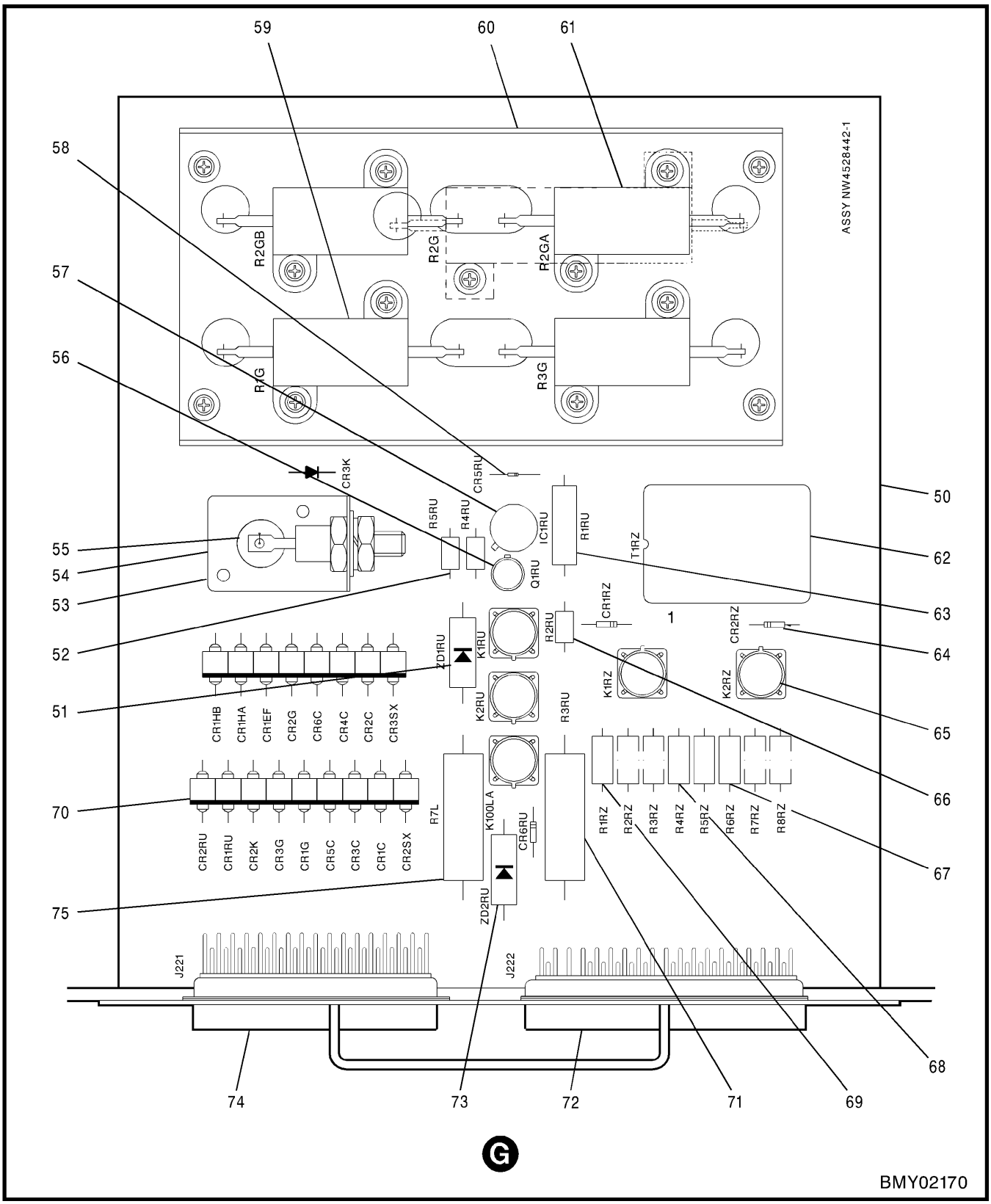

Figure 2-13-4 (Sheet 3 of 3) Cockpit Electronic Equipment

FIGURE AND INDEX NUMBER	GROUP ELECTRONIC EQUIPMENT MAJOR ASSEMBLY COCKPIT ELECTRONIC EQUIPMENT PART NUMBER	1 2 3 4 5 6 7 NOMENCLATURE	EFFEC-TIVITY	UNITS PER ASSY
2-13-4 -48	MF-6301-04	..ANCHOR NUT		2
-49	PFSC35-38A	..STUD		4
-50	NW4528445-1	.CIRCUIT BOARD - PRINTED		1
-51	1N5364B	..ZENER DIODE		1
	939-100	...SPACER		2
-52	RN55D4992F	..RESISTOR		1
-53	MS29470AD3-4	..RIVET		2
-54	NW4528438-1	..BRACKET		1
-55	1N614	..DIODE		1
-56	2N2222A	..TRANSISTOR		1
	112-040	..TRANSISTOR		1
-57	4N49	..OPTO-ISOLATOR		1
	615-075	...COMPONENT CARRIER		1
-58	1N4148	..DIODE		1
-59	RER70F15R8R	..RESISTOR - (R1G & R3G)		2
	MS35206-213	...SCREW		4
	MS514996D04	...WASHER		4
-60	NW4528447-1	..HEATSINK		1
-61	RH-25-20R	..RESISTOR - (R2GA & R2GB)		2
	MS35206-213	...SCREW		4
	MS51496D04	...WASHER		4
-62	109H	..TRANSFORMER - AUDIO		1
-63	R-2B (470R)	..RESISTOR		1
	939-100	...SPACER		2
-64	1N3613	..DIODE - (CR6RU, CR2RZ & CR1RZ)		3
-65	MIL-39016/15-81P	..RELAY - (K1RU, K2RU, K100LA, K1RZ & R2RZ)		5
-66	RN55D2212F	..RESISTOR		1
-67	RN60D2210F	..RESISTOR		1
-68	RN60D4750F	..RESISTOR - (R4RZ & R5RZ)		2
-69	RN60D1210F	..RESISTOR		1
-70	1N5625	..DIODE - (CR1RU, CR2RU, CR1HA, CR1HB, CR2K, CR1EF, CR3G, CR1C, CR2C, CR3C, CR4C, CR5C, CR6C, CR2SX, CR3SX, CR1G & CR2G)		17
-71	RS-5B (400R)	..RESISTOR		1
	939-200	..SPACER		2
-72	M24308/4-4	..CONNECTOR - (J222)		1
	030-2086-000	...PIN		20
	030-2087-000	...PIN		19
	D20418-2	...SCREW LOCK ASSY		2
-73	1N5355B	..ZENER DIODE		1
	939-100	..SPACER		1
-74	M24308/4-5	..CONNECTOR - (J221)		1
	030-2086-000	...PIN		18
	030-2087-000	...PIN		17
	030-2088-000	...PIN		18
	D20418-2	...SCREW LOCK ASSY		2
-75	RS-5B (350R)	..RESISTOR		1
	939-200	..SPACER		2
-76	NW4528220-2	.BASE PLATE		1
-77	MS35207-262	..SCREW		4
	NAS1149D0332J	..WASHER		4
-78	ID-1961B/ARC-164(V)	INDICATOR - UHF FREQUENCY CHANNEL (SEE SECTION 13)		1
-79	NW4528442-1	PCB ASSY - AVIONICS INTERFACE (SEE SECTION 13)		1

-000-

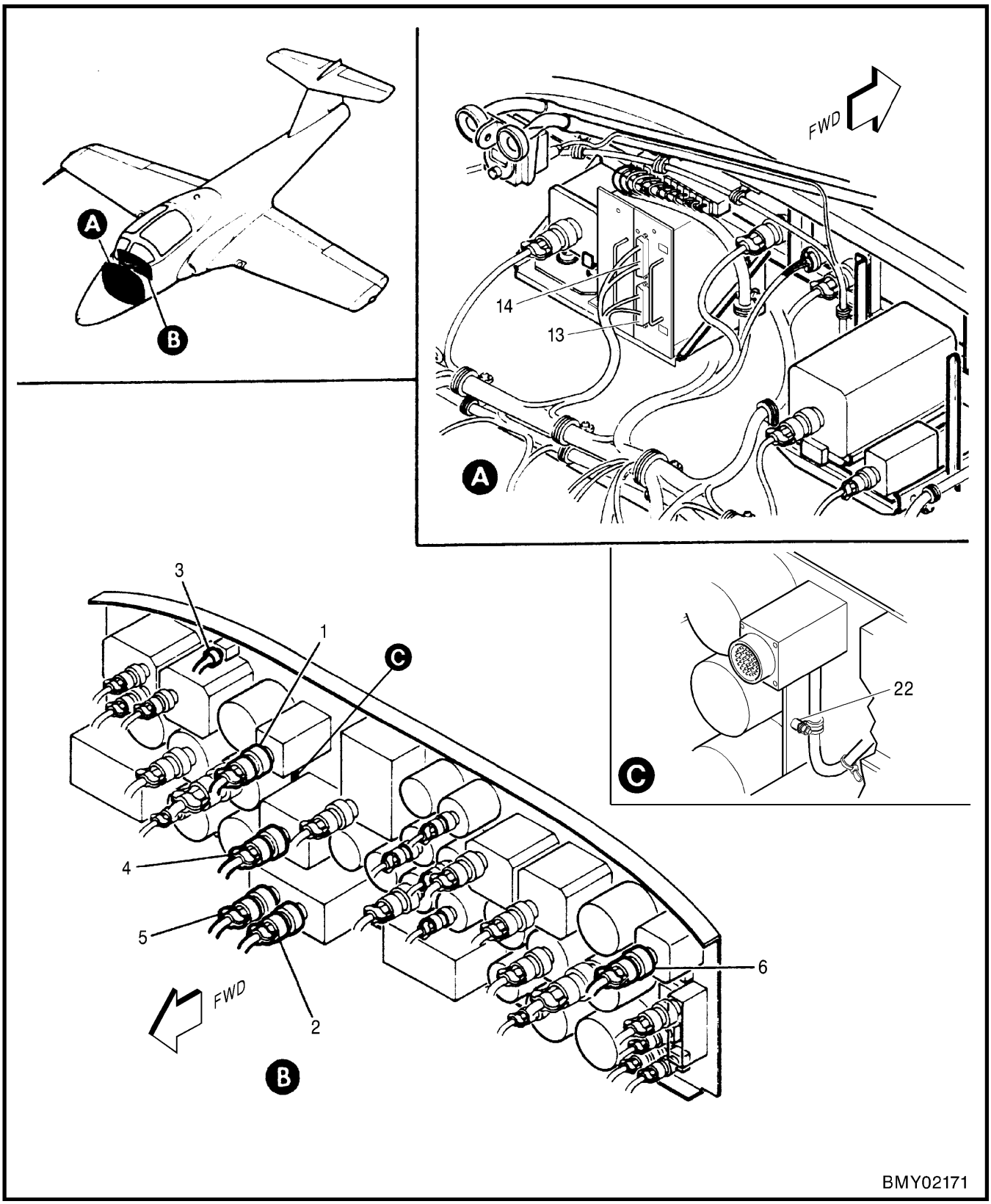

Figure 2-13-5 (Sheet 1 of 3) Cockpit Electronic Harnesses

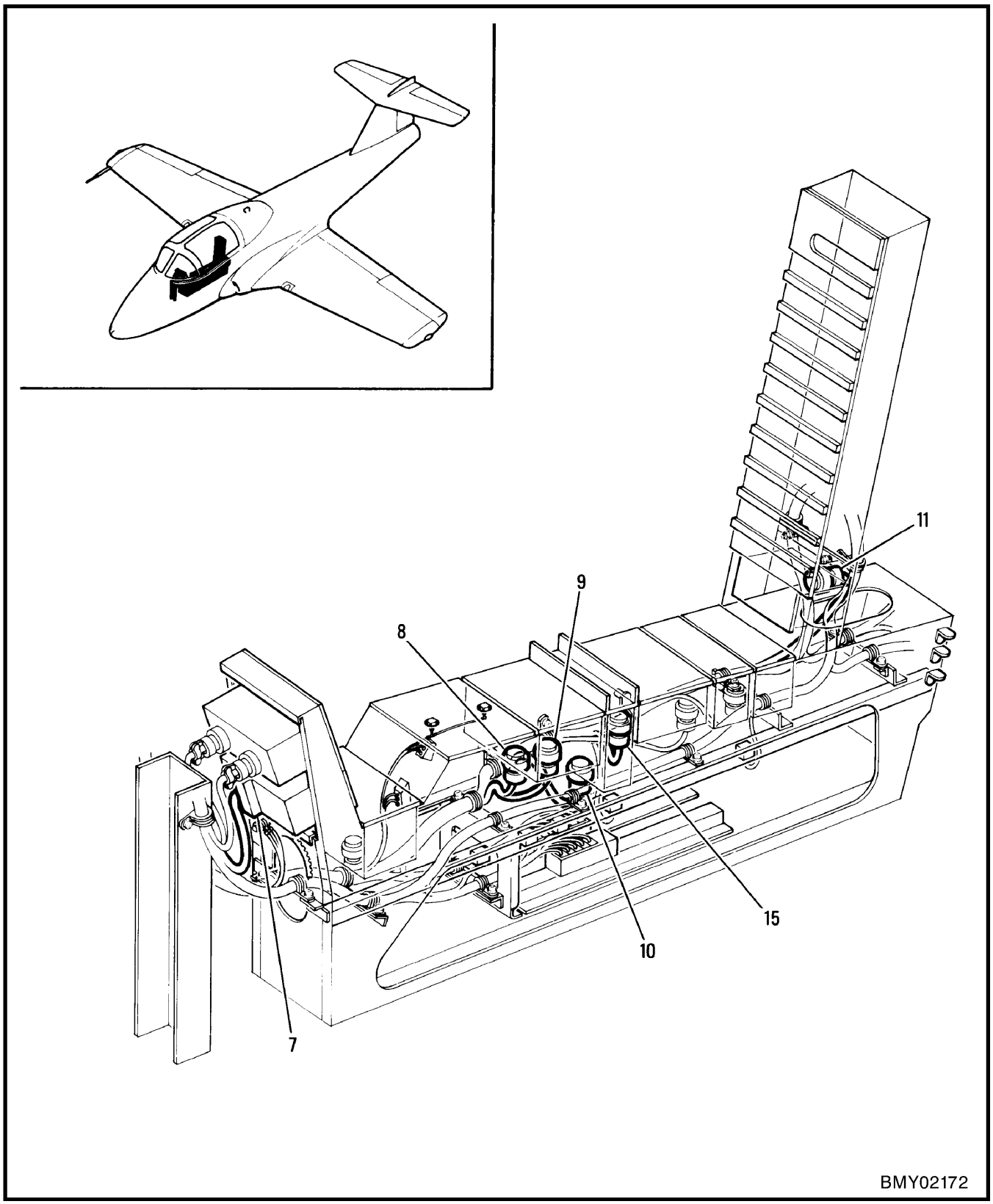

Figure 2-13-5 (Sheet 2 of 3) Cockpit Electronic Harnesses

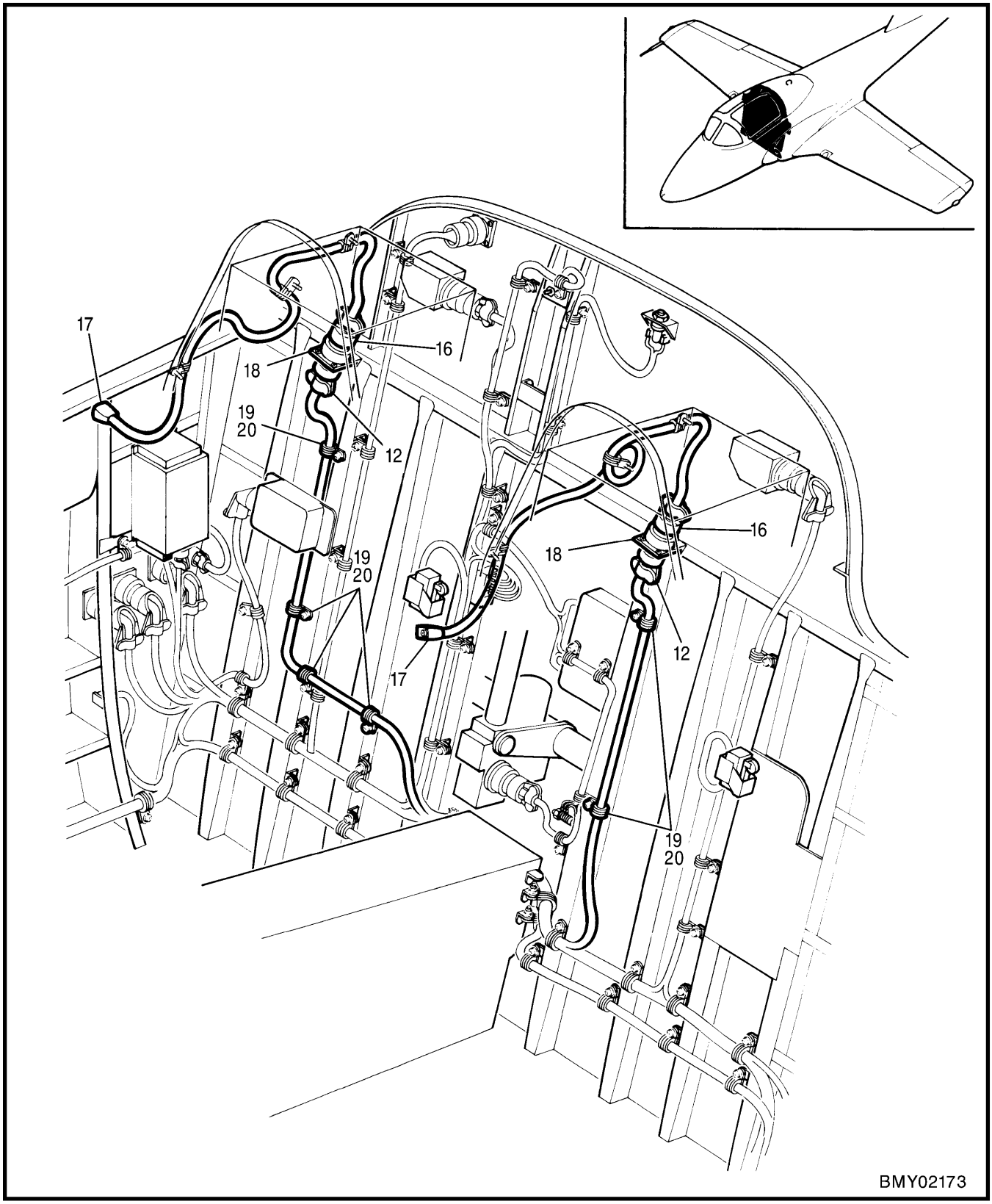

Figure 2-13-5 (Sheet 3 of 3) Cockpit Electronic Harnesses

FIGURE AND INDEX NUMBER	GROUP: ELECTRONIC EQUIPMENT MAJOR ASSEMBLY: COCKPIT ELECTRONIC HARNESSES PART NUMBER		1 2 3 4 5 6 7 NOMENCLATURE	EFFEC-TIVITY	UNITS PER ASSY
2-13-5 -	NW4528200-2		WIRING INSTL - COCKPIT (SEE SECTION 12)		REF
	NW4528320-1		.HARNESS ASSY - CENTER COCKPIT (SEE SECTION 12)		REF
- 1	MS3476L24-61S		..CONNECTOR - (P9) (MISC CONT & MKR PANEL)		1
	M85049/52-S-24N		..BACKSHELL		1
- 2	MS3476L20-41SW		..CONNECTOR - (P4RV) (VHF CONT UNIT)		1
	M85049/52-S-20N		..BACKSHELL		1
- 3	MS3476L18-32S		..CONNECTOR - (P13RU)		1
	M85049/52-S-18N		..BACKSHELL		1
- 4	67-06C20-37S		..CONNECTOR - (V02660) (P12RU) (UHF FREQ CHAN INDICATOR)		1
- 5	MS3476L20-41S		..CONNECTOR - (P8RNV) (VOR/ILS CONT)		1
	M85049/52-S-20N		..BACKSHELL		1
- 6	18-200		..CONNECTOR - (P3RU) (BH DISC FS 149)		1
R - 7	M28748/4-D0RS1A		..CONNECTOR - (V81312) (P5RN) (TACAN CONT PNL)		1
- 8	MS3476L20-41S		..CONNECTOR - (P9RU) (UHF RADIO CONT UNIT)		1
	M85049/31-20N		..BACKSHELL		1
- 9	MS3476L20-41P		..CONNECTOR - (P10RU) (UHF RADIO CONT UNIT)		1
	M85049/31-20N		..BACKSHELL		1
- 10	MS3476L20-41S		..CONNECTOR - (P3RZ) (AUDIO SELECT PNL)		1
	M85049/31-20N		..BACKSHELL		1
- 11	MS3476L14-19S		..CONNECTOR - (P14RU) (BAIL OUT OVERRIDE PNL)		1
	M85049/31-14N		..BACKSHELL		1
- 12	M83723/82R1407N		..CONNECTOR - (J1RZ & J2RZ) (LH & RH SEAT DISC)		2
	M85049/52-S-14N		..BACKSHELL		2
- 13	M24308/4-4		..CONNECTOR - (P222) (DISCRETE COMPONENT BOX)		1
	M85049/52-S-24N		..BACKSHELL		1
- 14	M24308/4-5		..CONNECTOR - (P221) (DISCRETE COMPONENT BOX)		1
	M85049/48-3-3		..BACKSHELL		1
- 15	M8723/75R2255N		..CONNECTOR - (P2SX) (TRANSPONDER SET CONT)		1
	M85049/31-22N		..BACKSHELL		1
	M85049/48-3-4		..BACKSHELL		1
- 16	M83723/66R1407N		..CONNECTOR - (P1RZ & P2RZ) (LH & RH SEAT DISC)		2
	M85049/52-S-14N		..BACKSHELL		2
- 17	M9177/3-1		..CONNECTOR - (J3RZ & J4RZ) (LH & RH SEAT INTERCOM)		1
- 18	MS35206-215		.SCREW		2
	NAS1149FN416P		.WASHER		4
	MS21042-04		.NUT		2
- 19	MS21919WDG4		.CLAMP		6
- 20	MS35206-245		.SCREW		5
	NAS1149FN816P		.WASHER		10
	MS21042-08		.NUT		5
- 21	MS24693-54	*	.SCREW - MACHINE		1
	MS21042L08	*	.NUT - SELF-LOCKING		1
	TO BE CONFIRMED	*	.WASHER		1
	MS35214-28	*	.SCREW - MACHINE		2
	NAS43DD3-32	*	.SPACER - SLEEVE		1
			-000-		
		*	IAW C-12-114-000/CF-542		

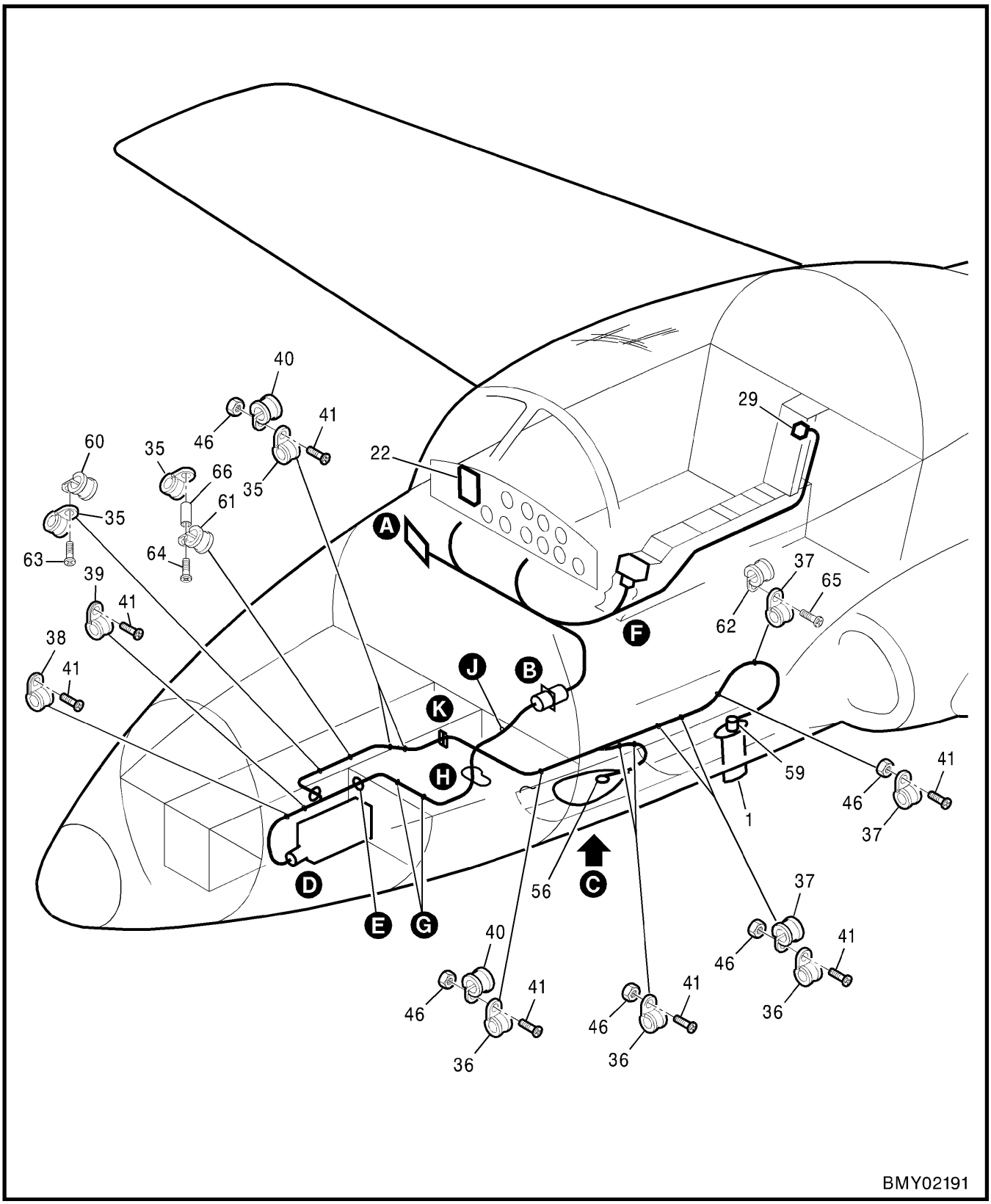

Figure 2-13-6 (Sheet 1 of 3) Automatic Direction Finding System – DF-206A

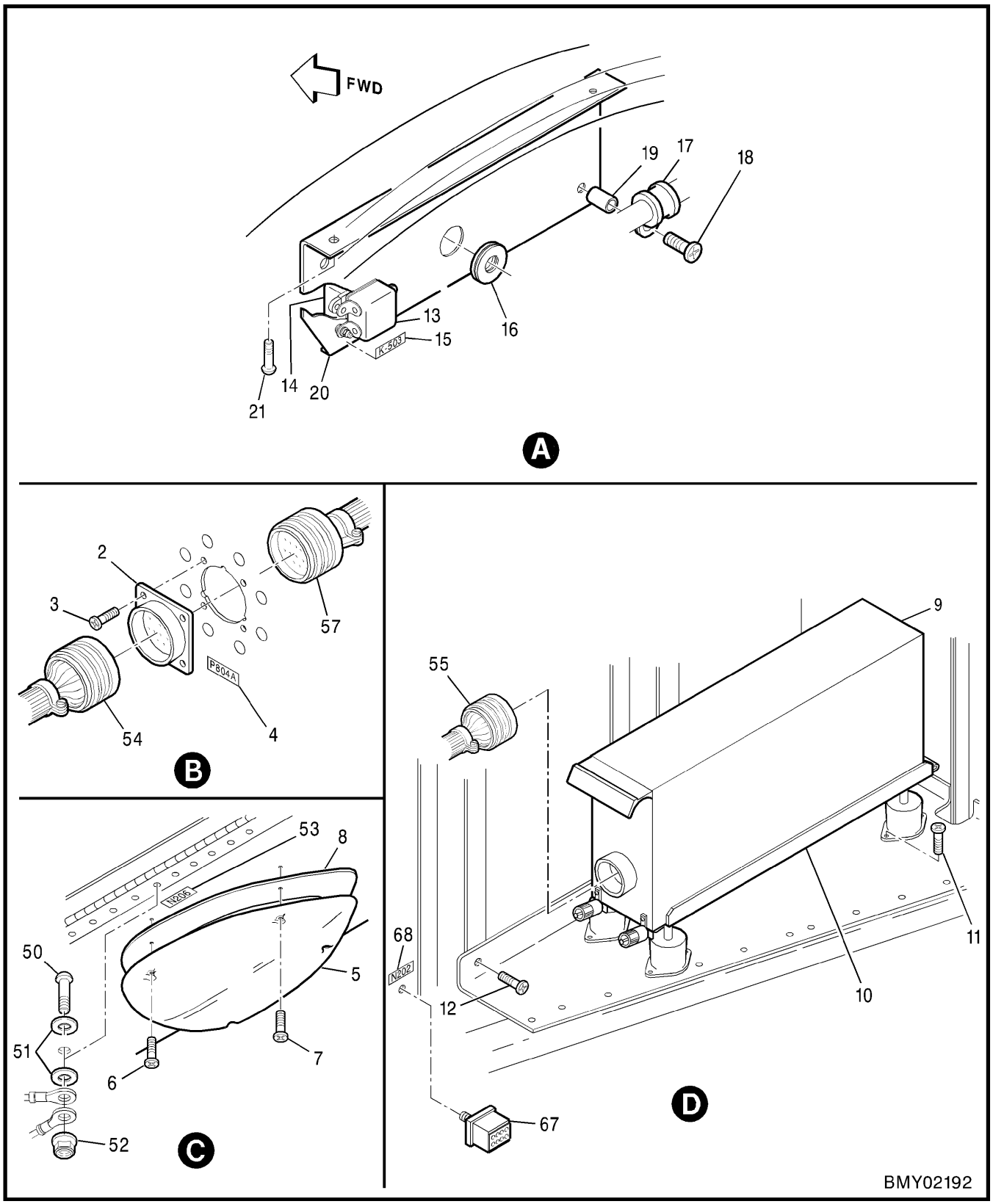

Figure 2-13-6 (Sheet 2 of 3) Automatic Direction Finding System – DF-206A

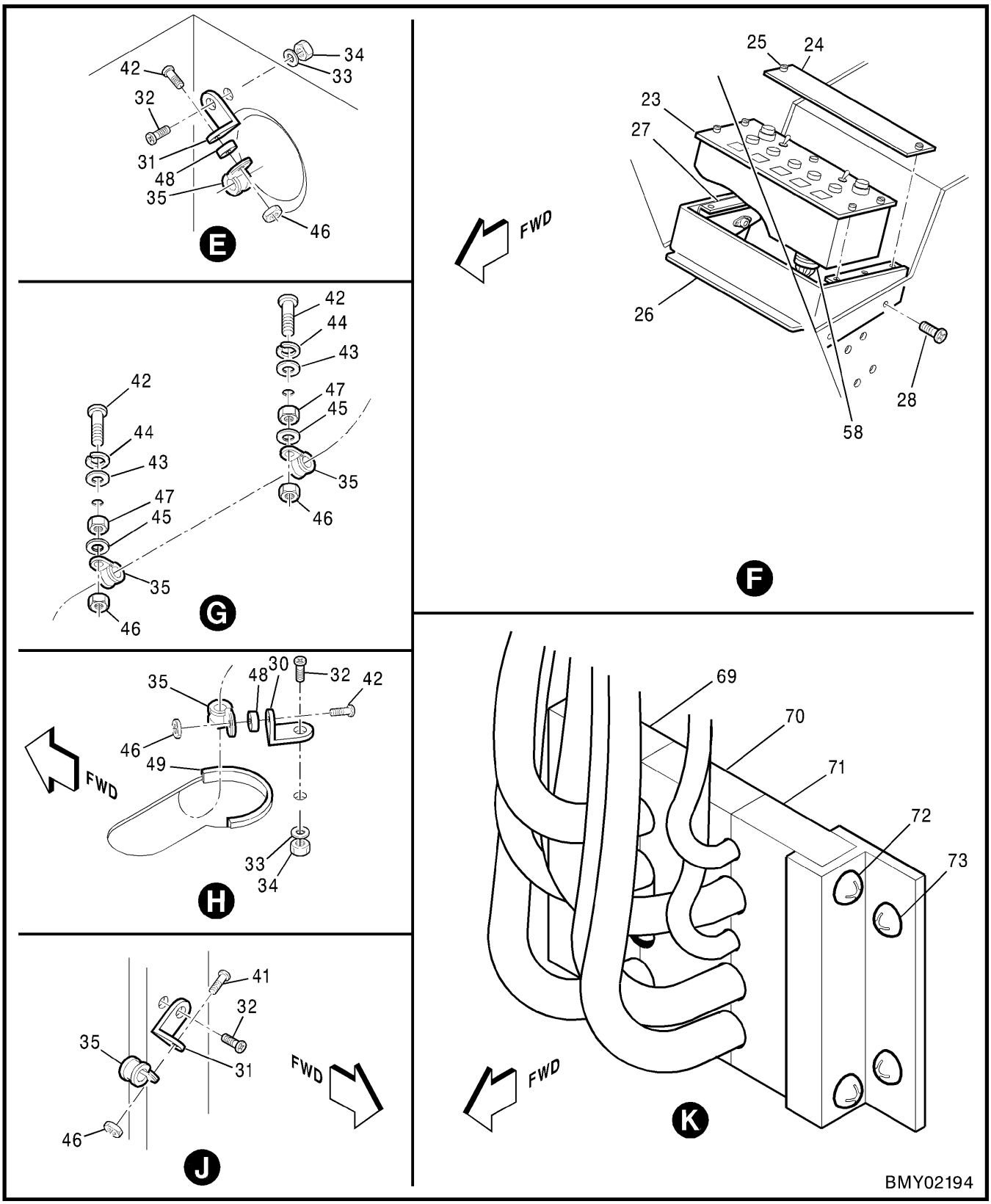

Figure 2-13-6 (Sheet 3 of 3) Automatic Direction Finding System – DF-206A

FIGURE AND INDEX NUMBER	GROUP	AUTOMATIC DIRECTION FINDING SYSTEM – DF-206A	EFFEC-TIVITY	UNITS PER ASSY
	MAJOR ASSEMBLY	COCKPIT ELECTRONIC HARNESSES		
	PART NUMBER	1 2 3 4 5 6 7 NOMENCLATURE		
2-13-6	4601101-1	AUTOMATIC DIRECTION FINDING SYSTEM - DF-206A		NP
- 1	4601102-1	.ANTENNA RELOCATION - UHF		1
		(SEE FIG. 2-13-2)		
	4601103-1	.CONNECTOR INSTL - BULKHEAD		1
- 2	MS3119E16-26	..CONNECTOR - (P804A)		1
- 3	MS35206-216	..SCREW		4
	NAS1149FN432P	..WASHER		4
	MS21042-04	..NUT		4
- 4	4601147-6	..LABEL (P804A)		2
	4601104-1	.ANTENNA INSTL - ADF		1
- 5	622-6820-001	..ANTENNA - ADF (DFA-206A)		1
- 6	MS35207-269	..SCREW		2
- 7	MS35207-270	..SCREW		2
- 8	623-9614-001	..GASKET		1
	4601105-1	.RECEIVER INSTL - ADF		1
		(SEE SECTION 12)		
- 9	622-6812-003	..RECEIVER - ADF (V95105) (DFR-206A)		1
-10	622-7210-002	..BASE - ADF MOUNTING (V95105)		1
-11	MS35206-245	..SCREW		8
-12	MS35206-261	..SCREW		1
	NAS1149C332R	..WASHER		1
	4601106-1	.BRACKET INSTL - RELAY		1
-13	Y-D4N	..RELAY - (V35344) (K503)		1
-14	S0-1066-001	..SOCKET - RELAY (V35344)		1
-15	4601125-1	..LABEL (K503)		1
-16	MS35489-9	..GROMMET		1
-17	MS21919WDG8	..CLAMP		1
-18	MS35207-267	..SCREW		1
	NAS1149F0363P	..WASHER		1
	MS35338-10	..WASHER		1
	MS21043-3	..NUT		1
-19	LS607-8	..SPACER (V36659)		1
-20	4601123-1	..BRACKET - RELAY		1
-21	MS35206-243	..SCREW		2
	NAS1149FN832P	..WASHER		2
	MS21042-08	..NUT		2
-22	4601107-1	.PANEL MODIFICATION - VOR		1
		(SEE FIG. 2-14-2)		
	4601108-1	.CONTROLLER INSTL - ADF		1
-23	622-6813-001	..CONTROLLER - ADF (V95105) (DFC-206A)		1
-24	4601139-1	..PLATE ASSY		1
-25	PFSC35-38A	...STUD (V72794)		2
-26	4601126-1	..BRACKET ASSY		1
-27	PR35	...ANGLE - MOUNTING (V72794)		2
-28	MS35207-243	..SCREW		4
-29	4601109-1	.CIRCUIT BREAKERS INSTL - ADF		1
		(SEE FIG. 2-12-14)		
	4601145-1	.WIRING INSTL - ADF		1
-30	AN743-12	..BRACKET		1
-31	AN743-13	..BRACKET		2
-32	MS35207-263	..SCREW		3
-33	NAS1149D0363J	..WASHER		2
-34	MS21044N3	..NUT		2
-35	MS21919WDG5	..CLAMP		9
-36	MS21919WDG6	..CLAMP		5
-37	MS21919WDG7	..CLAMP		4
-38	MS21919WDG8	..CLAMP		1
-39	MS21919WDG9	..CLAMP		1
-40	MS21919WDG10	..CLAMP		3
-41	MS35207-263	..SCREW		11
-42	MS35207-265	..SCREW		4
-43	NAS1149F0332P	..WASHER		2
-44	MS35338-43	..WASHER		2
-45	NAS1149D0363J	..WASHER		2

FIGURE AND INDEX NUMBER	GROUP	AUTOMATIC DIRECTION FINDING SYSTEM – DF-206A	EFFEC-TIVITY	UNITS PER ASSY
	MAJOR ASSEMBLY	COCKPIT ELECTRONIC HARNESSES		
	PART NUMBER	1 2 3 4 5 6 7 NOMENCLATURE		
2-13-6 -46	MS21044N3	..NUT		13
-47	MS35650-302	..NUT		2
-48	NAS43DD3-20	..SPACER (V36659)		2
-49	MS21266-2	..GROMMET		AR
	PLT1M-M	..STRAP (V06383)		AR
	PLT2M-M	..STRAP (V06383)		AR
-50	MS35207-265	..SCREW		1
-51	NAS1149D0363J	..WASHER		2
-52	MS21042-3	..NUT		1
-53	4601147-5	..LABEL (N206)		1
	4601112-1	..CABLE ASSY		1
-54	MS3476L16-26P	...CONNECTOR (P802A)		1
	M85049/52-16N	...BACKSHELL		1
-55	MS3476L22-55S	...CONNECTOR (P800A)		1
	M85049/52-22N	...BACKSHELL		1
	4601113-1	..LEAD ASSY		1
-56	MS34076L12-10S	...CONNECTOR (P801A)		1
	M85049/52-12N	...BACKSHELL		1
	4601114-1	..CABLE ASSY		1
-57	MS3476L16-26S	...CONNECTOR (P803A)		1
	M85049/52-16N	...BACKSHELL		1
	4601115-1	..LEAD ASSY		1
-58	MS24308/2-3	...CONNECTOR (P805A)		1
	M85049/48-3-3N	...STRAIN RELIEF		1
	DB51221-1	...RETAINER - ELEC CONN (V71468)		1
	4601146-1	..CABLE ASSY		1
-59	M39012/01-0005	...CONNECTOR (P102RU & P112RU)		2
	M55339/03-00027	...BACKSHELL		2
-60	MS21919WDG4	..CLAMP (SEE FIG. 2-12-6)		REF
-61	MS21919WDG7	..CLAMP (SEE FIG. 2-12-6)		REF
-62	MS21919WDG7	..CLAMP (SEE FIG. 2-13-3)		REF
-63	MS35206-245	..SCREW (SEE FIG. 2-12-6)		REF
-64	MS35206-248	..SCREW (SEE FIG. 2-12-6)		REF
-65	MS35206-249	..SCREW (SEE FIG. 2-13-3)		REF
-66	NAS43DD3-24	..SPACER (SEE FIG. 2-12-6)		REF
-67	M81714/63-20S	..MODULE - GROUNDING (N202)		1
-68	4601147-2	..LABEL (N202)		1
-69	4601148-1	..FAIRLEAD (MODIFYING NW4528147-4)		1
-70	4601148-2	..FAIRLEAD (MODIFYING NW4528147-5)		1
-71	4601148-3	..FAIRLEAD (MODIFYING NW4528147-6)		1
-72	MS35207-273	SCREW (SEE FIG. 2-12-16)		REF
	AN960PD10L	WASHER (SEE FIG. 2-12-16)		REF
	MS21042L3	NUT (SEE FIG. 2-12-16)		REF
-73	MS35207-263	SCREW (SEE FIG. 2-12-16)		REF
	AN960PD10L	WASHER (SEE FIG. 2-12-16)		REF
		-000-		

SECTION 14

INSTRUMENT EQUIPMENT

TABLE OF CONTENTS

Figure	Title	Page
2-14-1	Cockpit Instrument Equipment	2-14-2
2-14-2	Instrument Panel	2-14-8
2-14-3	Forward Fuselage Instrument Equipment	2-14-14
2-14-4	Centre Fuselage Instrument Equipment	2-14-16
2-14-5	Cross Cockpit Instrument Panel Mod (For Snowbird Arcft Only)	2-14-20
2-14-6	LH & RH Facia Panel (For Snowbird Arcft Only)	2-14-22
2-14-7	Handheld GPS Mounting Assy	2-14-24

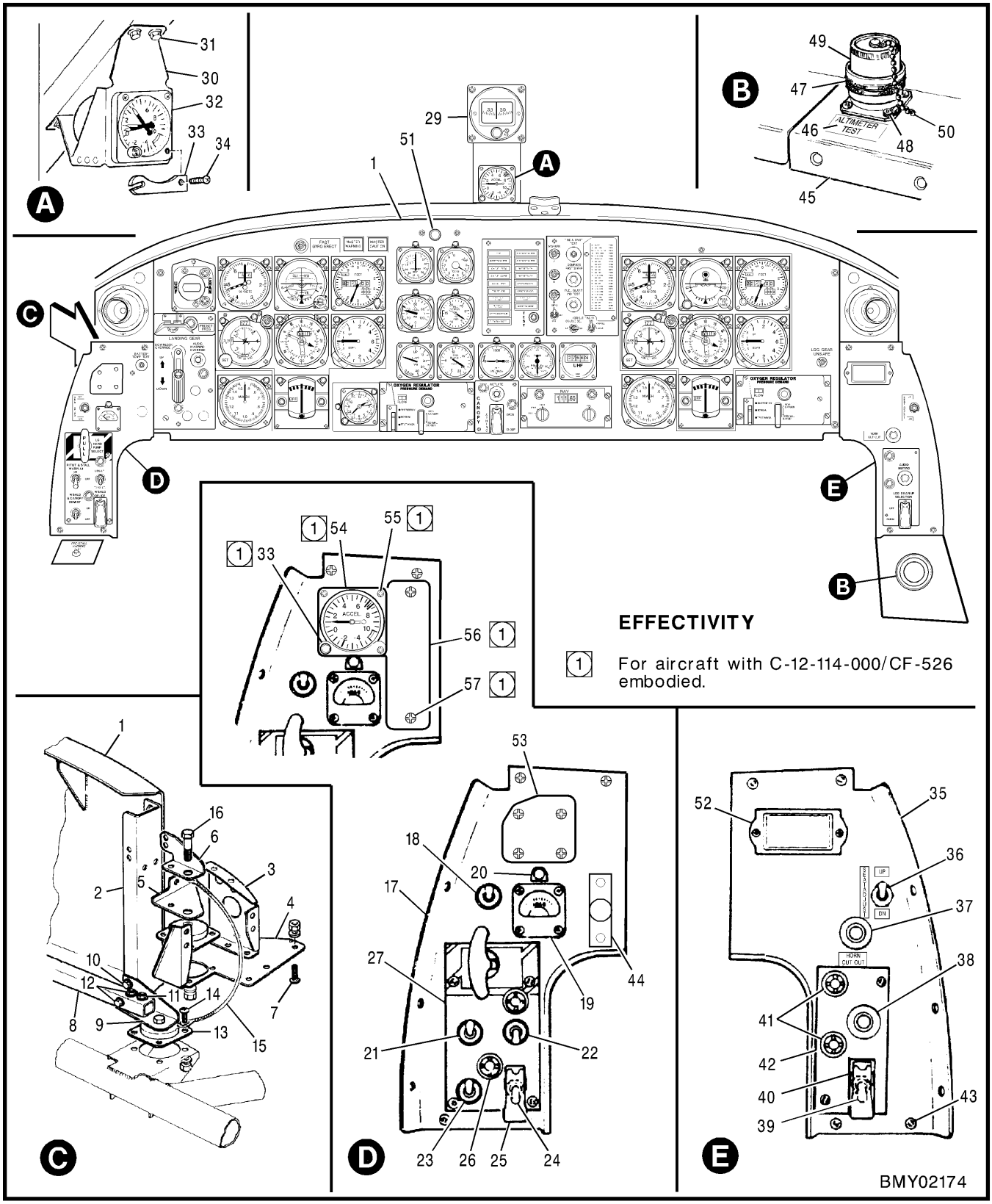

Figure 2-14-1 Cockpit Instrument Equipment

FIGURE AND INDEX NUMBER	GROUP INSTRUMENT EQUIPMENT MAJOR ASSEMBLY COCKPIT INSTRUMENT EQUIPMENT PART NUMBER	1 2 3 4 5 6 7 NOMENCLATURE	EFFEC-TIVITY	UNITS PER ASSY
2-14-1 -	41A-42200	COCKPIT EQUIPMENT INSTL - (SEE SECTION 12)		REF
	41A-52003	.PANEL INSTL - INSTRUMENT		NP
	NW4528142-1	.BONDING JUMPER INSTL		NP
	NW4528320	.HARNESS ASSY - CENTRE COCKPIT		NP
	NW4528322	.HARNESS ASSY - RH COCKPIT		NP
	NW4528323	.HARNESS ASSY - LH COCKPIT		NP
- 1	C72D47119-1	..PANEL ASSY - INSTRUMENT (MODIFIED) (SEE FIG. 2-14-2)		REF
- 2	41A-52003-4	..CHANNEL ASSY - PANEL LH		1
	41A-52003-5	..CHANNEL ASSY - PANEL RH		1
- 3	41A-52003-28	..BRACKET - UPPER LH		1
	41A-52003-29	..BRACKET - UPPER RH		1
- 4	41A-52003-86	..BRACKET - UPPER LH		1
	41A-52003-23	..BRACKET - UPPER RH		1
- 5	41A-52003-26	..ANGLE - UPPER LH		1
	41A-52003-27	..ANGLE - UPPER RH		1
- 6	41A-52003-24	..BRACKET - UPPER LH		1
	41A-52003-25	..BRACKET - UPPER RH		1
- 7	MS35206-243	..SCREW		6
	AN960D8L	..WASHER		6
	MS21042L08	..NUT		6
- 8	41A-52003-32	..TUBE - LOWER		1
- 9	41A-52003-30	..ANGLE - LH		1
	41A-52003-31	..ANGLE - RH		1
-10	AN3-5A	..BOLT		2
	AN960D10	..WASHER		2
	MS21042L3	..NUT		2
-11	MS24694-59	..SCREW		2
	NAS43-3-40	..SPACER		2
	AN960D10	..WASHER		2
	MS21042L3	..NUT		2
-12	AN3-11A	..BOLT		2
	NAS43-3-43	..SPACER		2
	AN960D10	..WASHER		2
	MS21042L3	..NUT		2
-13	AN8008D13	..INSULATOR		4
-14	MS35206-245	..SCREW		16
-15	MS83413/8-AO6BB	..JUMPER ASSY		2
	AN960JD8L	..WASHER		16
	MS21042L08	..NUT		16
-16	AN6-15A	..BOLT		4
	AN960D-6L	..WASHER - FLAT		4
	AN960JD10L	..WASHER - FLAT		4
	AN960-10L	..WASHER - FLAT		4
	MS35338-43	..WASHER - LOCK		4
	MS21042L3	..NUT - SELF LOCKING		2
	41A-52025-806 *	.PANEL INSTL - PILOTS FACIA		NP
	41A-52025-90	..PANEL ASSY - FACIA		1
-17	41A-52025-88	...PANEL		1
-18	MS35058-27	...SWITCH - (SEAT ADJUST)		1
-19	Z2291W	...METER - (V16688) (ARBITRARY SCALE LOAD) FOR BRKDN SEE C-67-F58-000/MY-000		1
	MS35214-29	...SCREW		4
	NAS487-13	...NUT		4
-20	A6745C24	...FIXTURE - (V72914) (LIGHT)		1
	NAS43DD4-8	...SPACER		1
	MS25237-327	...LAMP		1
-21	MS24658-230	...SWITCH - (PITOT & STALL WARNING)		1
-22	MS35059-21	...SWITCH - (LANDING & TAXI LIGHT)		1
	*	IAW C-12-114-000/CF-320, 363 & 378		

FIGURE AND INDEX NUMBER	GROUP INSTRUMENT EQUIPMENT MAJOR ASSEMBLY COCKPIT INSTRUMENT EQUIPMENT PART NUMBER	1 2 3 4 5 6 7 NOMENCLATURE	EFFEC-TIVITY	UNITS PER ASSY
2-14-1 -23	MS35058-23	...SWITCH - (WINDSHIELD & CANOPY DEMIST)		1
-24	MS35058-23	...SWITCH - (WINDSHIELD DEICE S1HB)		1
-25	MS25224-1	...GUARD		1
-26	MS25010B11	...LIGHT ASSY		2
	MS25237-327	...LAMP		1
-27	41A-50729	...PANEL - EDGELIT PLASTIC		1
	MS35273-30	...SCREW		4
	S1426-6	...WASHER - (V88308)		4
-28	NAS623-3-2	..SCREW		4
	AN960D10L	..WASHER		4
-29	AE341-7C	.COMPASS - (V07213) (MAGNETIC) (RELOCATED)		1
	AN515PB6R14	.SCREW		4
	AN960D8	.WASHER		4
	NAS487-16	.NUT		4
-30	NO NUMBER	.BRACKET - ACCELEROMETER SUPPORT (IAW C-12-114-000/CF-320)		1
-31	AN3C3A	.BOLT		4
	AN960C10L	.WASHER		4
	MS35338-100	.LOCK WASHER		4
-32	AE3402B	.ACCELEROMETER - (V07213) (MECHANICAL) FOR BRKDN SEE C-16-682-000/MF-000		1
-33	NO NUMBER	.LOCKING BAR - (ACCELEROMETER) (IAW C-12-114-000/CF-457) (RELOCATED TO ACCELEROMETER ON LH FACIA PANEL WHEN C-12-114-000/CF-526 IS EMBODIED)		1
-34	MS35214-29	.SCREW		3
	AN960D8L	.WASHER		3
	NAS487-13	.NUT		3
	41A-52025-805	.PANEL INSTL - COPILOTS FACIA (IAW C-12-114-000/CF-033 & 325)		NP
	41A-52025-89	..PANEL ASSY - FACIA		1
-35	41A-52025-87	...PANEL		1
-36	MS35058-27	...SWITCH - (SEAT ADJUST)		1
	NW4528432-11	...DECAL - (UP)		1
	NW4528432-10	...DECAL - (DN)		1
	NW4528432-8	...DECAL - (SEAT ADJUST)		1
-37	MS25089-5C	...SWITCH - (HORN CUT-OUT)		1
	NW4528328-8	...DECAL - (HORN CUTOUT)		2
-38	MS25089-4C	...SWITCH - (AUDIO MUTING)		1
-39	MS35058-23	...SWITCH - (LANDING GEAR UP OVERRIDE)		1
-40	8916K759	...GUARD - (V81640)		1
-41	MS25010B11	...LIGHT ASSY		2
	MS25237-327	...LAMP		2
-42	41A-50730	...PANEL - EDGELIT PLASTIC		1
	MS35214-27	...SCREW		2
	S1426-6	...WASHER - (V88308)		2
-43	NAS623-3-2	..SCREW		4
	AN960D10L	..WASHER		4
-44	SS48152K2215	BUTTON - (V61864) (IAW C-12-114-000/CF-482)		1
-45	C71C47114-1	.PANEL - TEST PLUG MOUNTING		1
-46	C71B47355-1	.DECAL - (ALTIMETER TEST)		1
	C72C47117-1	.HARNESS ASSY - (J1A TEST RCPT WIRING)		1
-47	MS3120E20-41S	..RECEPTACLE		1
-48	MS35206-218	.SCREW		4
	AN960-4	.WASHER		4
	MS35338-40	.LOCK WASHER		4
	MS35649-242	.NUT		4
	C71C00269-1	.PLUG ASSY - ALTIMETER TEST POINT SHORTING		1
	C71C00268-1	..PLUG ASSY - (JUMPER WIRED)		1
-49	PT06E20-41P	...PLUG - (V77820)		1

FIGURE AND INDEX NUMBER	GROUP: INSTRUMENT EQUIPMENT MAJOR ASSEMBLY: COCKPIT INSTRUMENT EQUIPMENT PART NUMBER		1 2 3 4 5 6 7 NOMENCLATURE	EFFEC-TIVITY	UNITS PER ASSY
2-14-1 -50	C71B00267-1		..WASHER & CHAIN ASSY		1
-51	508-7545-504	*	LAMP HOLDER - (V72619)		1
	MS18235-3RT	*	LAMP CARTRIDGE		1
	30-83059	*	DECAL - (V88308)		1
	41A-90964-1		EQUIPMENT INSTL - RH FACIA PANEL (SEE SECTION 12)		NP
-52	NW4513053-1		HOLDER - PLACARD (OIL PRESSURE) (IAW C-12-114-000/CF-278)		1
	MS20426AD3-4		RIVET		2
-53	NO NUMBER	**	PLATE - BLANKING		1
	MS35207-265	**	SCREW		4
	FFW92	**	WASHER - (V81348)		4
	MS21042L3	**	NUT		4
-54	AE340-2B	***	ACCELEROMETER - (V07213)		1
-55	MS35214-30	***	SCREW		3
-56	NO NUMBER	***	PLATE - BLANKING		1
-57	MS35207-265	***	SCREW		2
		*	IAW C-12-114-000/CF-467		
		**	IAW C-12-114-000/CF-515		
		***	IAW C-12-114-000/CF-526		

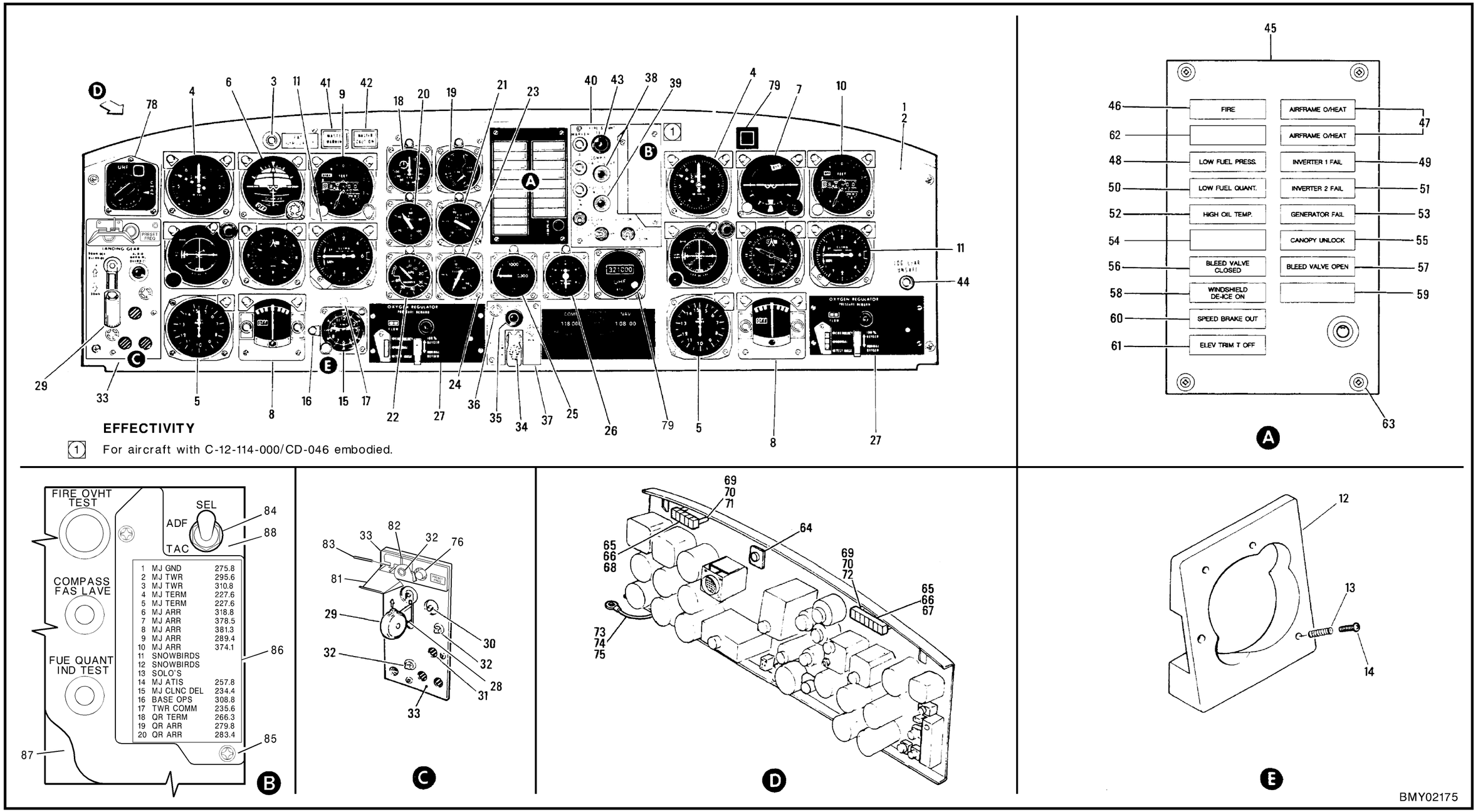

Figure 2-14-2 Instrument Panel

FIGURE AND INDEX NUMBER	GROUP INSTRUMENT EQUIPMENT MAJOR ASSEMBLY INSTRUMENT PANEL PART NUMBER	1 2 3 4 5 6 7 NOMENCLATURE	EFFEC-TIVITY	UNITS PER ASSY
2-14-2 -	C72D47119-1	PANEL ASSY - INSTRUMENT (IAW C-12-114-000/CF-356, 357, 385 & CD-031) (MODIFIED BY 41A-90962) (SEE FIG. 2-14-1)		1
	C72D47118-1	.PANEL ASSY - INSTRUMENT		1
- 1	41A-52003-90	..PANEL - INSTRUMENT		1
	40S5-5	..STUD - (V71286)		4
	4002G	..GROMMET - (V71286)		4
	R4G	..RING - (V71286)		4
	107A	.RECEPTACLE - (V04211)		1
- 2	S1331A7	.POST - (V88308)		3
	MS35206-243	.SCREW		3
	MS35337-40	.LOCK WASHER		3
- 3	MS25089-4C	.SWITCH - (FAST GYRO ERECTION)		1
- 4	C90015CX10	.INDICATOR - (V09708) (AIRSPEED) FOR BRKDN SEE C-16-110-000/MY-000		2
	B6610C	.FIXTURE - (V72914) (LIGHTING)		2
	MS25237-327	.LAMP		4
R	MS24693BB-33	.SCREW		4
	MS35214-109	.SCREW		2
	AN960D8L	.WASHER		6
	NAS487-15	.NUT		6
	41A-52004-138	.MACHMETER ASSY		2
- 5	C90004-10	..MACHMETER - (V09708) (TYPE A-2B/C) FOR BRKDN SEE C-16-123-000/MY-000		1
	B6610C *	..FIXTURE - (V72914) (LIGHTING)		1
	MS25237-327	..LAMP		1
	41A-52003-78	..WASHER - BONDING		1
	MS24693BB34 *	.SCREW		4
	AN960D8L	.WASHER		4
	NAS487-21 *	.NUT		4
- 6	140140-01-01	.INDICATOR - (V35351) (TYPE ARU-13/A ATTITUDE) FOR BRKDN SEE C-16-219-000/MS-000 NOTE: MOD C-12-114-000/CF-544 ENABLES INTERCHANGEABILITY OF LH AND RH ATTITUDE INDICATORS ON SELECTED SNOWBIRD AIRCRAFT.		1
	B6611C	.FIXTURE - (V72914) (LIGHTING)		1
	MS25237-327	.LAMP		2
R	MS24693BB-31	.SCREW		2
	MS35214-30	.SCREW		2
	AN960D8L	.WASHER		2
	NAS487-15	.NUT		2
- 7	AE300270-4A	.INDICATOR - (V07213) (TYPE J-8 ATTITUDE) (SEE ITEM 6 NOTE:) FOR BRKDN SEE C-16-190-000/MY-Z01		1
	B6611C	.FIXTURE - (V72914) (LIGHTING)		1
	MS25237-327	.LAMP		2
	MS24693-32	.SCREW		2
	MS35214-30	.SCREW		2
	AN960D8L	.WASHER		4
	NAS487-15	.NUT		4
R - 8	AE355-2A	.INDICATOR - (V07213) (TURN & SLIP) FOR BREAKDOWN, SEE C-16-171-000/MS-001, OR		2
R	AE355-3A	.INDICATOR - (V07213) (TURN & SLIP) FOR BREAKDOWN, SEE C-16-171-000/MS-001		2
	B6602AC	.FIXTURE - (V72914) (LIGHTING)		2
	MS25237-327	.LAMP		2
R	MS24693BB-33	.SCREW		4
	MS35214-109	.SCREW		4
	AN960D8L	.WASHER		8
	NAS487-15	.NUT		8
	*	IAW C-12-114-000/CF-385		

FIGURE AND INDEX NUMBER	GROUP INSTRUMENT EQUIPMENT MAJOR ASSEMBLY INSTRUMENT PANEL PART NUMBER		1 2 3 4 5 6 7 NOMENCLATURE	EFFEC-TIVITY	UNITS PER ASSY
2-14-2 - 9	81-22-20		.INDICATOR - (V07213) (SERVOED ALTIMETER) FOR BRKDN SEE C-16-815-000/MK-000		1
-10	31236-10T-C11		.INDICATOR - (V07213) (ALTITUDE COMPUTER) FOR BRKDN SEE C-16-814-000/MN-000		1
	B6611C		.FIXTURE - (V72914) (LIGHTING)		2
	MS25237-327		.LAMP		4
R	MS24693BB-33		.SCREW		4
	MS35214-31		.SCREW		2
	AN960D8L		.WASHER		6
	NAS487-15		.NUT		6
-11	AE342-4-B		.INDICATOR - VERTICAL VELOCITY (V07038)		2
	B6610C		.FIXTURE - (V72914) (LIGHTING)		2
	MS25237-327		.LAMP		4
	MS24693-32		.SCREW		4
	MS35214-30		.SCREW		2
	AN960D8L		.WASHER		6
	NAS487-15		.NUT		6
	8140344-1	*	.ADAPTER ASSY		1
-12	8140344-2	*	..ADAPTER		1
-13	MS122118	*	..INSERT		2
	MS122198	*	..INSERT		2
-14	MS35214-24	*	.SCREW		2
	MS35214-27	*	.SCREW		2
-15	A13A2		.CLOCK - (V98429) (MODEL W33-7545-10) FOR BRKDN SEE C-65-152-000/MS-000		1
-16	A6815C24		.FIXTURE - (V72914) (LIGHTING)		1
	MS25237-327		.LAMP		1
	MS35214-29		.SCREW		2
	AN960D8L		.WASHER		2
	NAS487-15		.NUT		2
-17	SS51071		.PLUG - BUTTON (IAW C-12-114-000/CF-424)		1
-18	1559-10-03		.INDICATOR - (V89944) (ELECTRICAL TACHOMETER) FOR BRKDN SEE C-16-723-000/MY-000		1
-19	152B22A		.INDICATOR - (V35918) (EXHAUST GAS TEMP) (IAW C-12-114-000/CF-433)		1
-20	AE346-2A		.INDICATOR - (V07213) (OIL PRESSURE) FOR BRKDN SEE C-16-481-000/MS-000		1
-21	18-1417		.INDICATOR - (SOE) (HYDRAULIC PRESSURE) FOR BRKDN SEE C-16-494-000/MS-000		1
-22	EA323-2H		.INDICATOR - (V36536) (FLAP POSITION) FOR BRKDN SEE C-16-661-000/MN-000		1
-23	JG602A1		.INDICATOR SYS - (MHR) (FUEL QUANTITY) (IAW 41A-50706-2) FOR BRKDN SEE C-16-542-000/MF-000		1
	10558N01Y00		.INDICATOR - (FUEL QUANTITY)		1
	MS28055-11		.BEZEL - (FOR ITEMS 21 TO 26)		6
-24	MS35265-2		.SCREW		24
-25	AN6011-1B		.INDICATOR - (V09487) (OXYGEN PRESSURE) FOR BRKDN SEE C-22-232-000/MS-000		1
-26	AC106-1P		.ALTIMETER - (V89944) (CABIN PRESS ALTITUDE) FOR BRKDN SEE C-16-480-000/MN-000		1
	A6815C24		.FIXTURE - (V72914) (LIGHTING)		8
	MS25237-326		.LAMP		8
	MS35214-29		.SCREW		32
	AN960D8L		.WASHER		32
	NAS487-15		.NUT		32
-27	19325-3		.PANEL - OXYGEN DILUTER DEMAND (V12282) OR		2
	19325-5		PANEL - OXYGEN DILUTER DEMAND (V12282) FOR BRKDN SEE C-22-203-000/MS-000		2
		*	IAW C-12-114-000/CF-438		

FIGURE AND INDEX NUMBER	GROUP INSTRUMENT EQUIPMENT MAJOR ASSEMBLY INSTRUMENT PANEL PART NUMBER	1 2 3 4 5 6 7 NOMENCLATURE	EFFEC-TIVITY	UNITS PER ASSY
2-14-2 -28	A50M6-4	.SWITCH ASSY - (99145) (LDG/GR CONTROL) (IAW 41A-50751-4) (IAW C-12-142-000/NS-212)		1
-29	C101073	..KNOB ASSY - (V36123)		1
	MS25237-328	..LAMP		2
	A451-2	..KNOB ASSY - (USE ON SWITCH ASSY PN A50M6-4)		1
	MS24693S270	.SCREW		2
-30	MS25089-4C	.SWITCH - (AUDIO WARNING OVERRIDE)		1
-31	AN5839-2	.INDICATOR - LANDING GEARPOSITION FOR BRKDN SEE C-16-654-000/MN-000		3
	MS24693-24	.SCREW		6
-32	MS25010B12A	.LIGHT ASSY		3
	MS25237-327	.LAMP		3
-33	41A-50715	.PANEL - EDGE LIGHTED PLASTIC		1
	MS35214-27	.SCREW		2
	MS35214-28	.SCREW		2
	S1426-6	.WASHER - (V88308)		4
-34	MS35059-23	.SWITCH - (CANOPY SELECTOR)		1
	MS25224-1	.GUARD		1
-35	MS25089-3CR	.SWITCH - (CANOPY ACTUATOR)		1
-36	MS25010B12A	.LIGHT ASSY		2
-37	41A-50739	.PANEL - EDGE LIGHTED PLASTIC		1
	MS35214-27	.SCREW		2
	S1426-6	.WASHER - (V88308)		2
-38	MS25089-5C	.SWITCH - (COMPASS FAST SLAVE)		1
-39	MS25089-4C	.SWITCH - (FUEL QUANTITY INDICATOR TEST)		1
-40	41A-50733	.PANEL - EDGE LIGHTED PLASTIC		1
	MS35214-27	.SCREW		4
	S1426-6	.WASHER - (V88308)		4
	41A-57135-802	.HARNESS ASSY - INSTRUMENT PANEL		1
R -41	1227-1	..LIGHT SWITCH ASSY - (V96182) (MASTER WARNING)		1
R	10HR1V13	...LENS (V96182)		1
	10HL(R)	...FILTER - LAMP (V96182)		4
R -42	1227-2	..LIGHT SWITCH ASSY - (V96182) (MASTER CAUTION)		1
R	10HR1V13	...LENS (V96182)		1
	10HL(A)	...FILTER - LAMP (V96182)		4
	MS25237-327	..LAMP		8
-43	61919-2	..SWITCH - (V38501) (FIRE & OVERHEAT DET TEST) (IAW C-12-114-000/CF-506)		1
-44	MS25041-6	..LIGHT ASSY - (LANDING GEAR UNSAFE)		1
	MS25237-327	..LAMP		1
-45	NW4528470-1	.BOX ASSY - (V96182) (MASTER WARNING) (IAW C-12-114-000/CF-311 & 514, CF-515 IAW CD-036)		1
	NW4528473-1	..NAMEPLATE - (V96182)		1
	41A-50704-40	..CAPSULE - (V96182)		18
-46	4140-319-1	..LENS & LEGEND - (FIRE) (IAW 41A-50704-21)		1
-47	4140-319-2	..LENS & LEGEND - (AIRFRAME O/HEAT) (IAW 41A-50704-22)		2
-48	4140-319-4	..LENS & LEGEND - (LOW FUEL PRESS) (IAW 41A-50704-25)		1
-49	4140-319-6	..LENS & LEGEND - (INVERTER 1 FAIL) (IAW 41A-50704-26)		1
-50	4140-319-7	..LENS & LEGEND - (LOW FUEL QUANT) (IAW 41A-50704-27)		1
-51	4140-319-8	..LENS & LEGEND - (INVERTER 2 FAIL) (IAW 41A-50704-28)		1
-52	4140-319-9	..LENS & LEGEND - (HIGH OIL TEMP) (IAW 41A-50704-29)		1
-53	4140-319-10	..LENS & LEGEND - (GENERATOR FAIL) (IAW 41A-50704-30)		1
-54	NW4528472-1	..LENS		1
-55	4140-319-12	..LENS & LEGEND - (CANOPY UPLOCK) (IAW 41A-50704-32)		1
-56	41A-50704-33	..LENS & LEGEND - (BLEED VALVE CLOSED)		1

FIGURE AND INDEX NUMBER	GROUP INSTRUMENT EQUIPMENT MAJOR ASSEMBLY INSTRUMENT PANEL PART NUMBER		1 2 3 4 5 6 7 NOMENCLATURE	EFFEC-TIVITY	UNITS PER ASSY
2-14-2 -57	41A-50704-34		..LENS & LEGEND - (BLEED VALVE OPEN)		1
-58	101-0536-65-7		..LENS & LEGEND - (WINDSHIELD DE-ICE ON)		1
-59	NW4528472-1		..LENS		1
-60	4140-319-14		..LENS & LEGEND - (SPEED BRAKE OUT) (IAW 41A-50704-37)		1
-61	4140-319-15		..LENS & LEGEND - (ELEVATOR TRIM TAB OFF) (IAW 41A-50704-38)		1
-62	NW4528472-1		..LENS		1
	MS25237-327		..LAMP		30
-63	MS35214-27		.SCREW		4
	AN960D6L		.WASHER		4
	AN960D8L		.WASHER		4
	NAS487-15		.NUT		4
	41A-90962-1		EQUIPMENT INSTL - INSTRUMENT PNL (SEE SECTION 12)		NP
	NW4528077-1		.FIRE & OVHT TEST SWITCH MODIFICATION		REF
-64	61919-2		..SWITCH - (S1V)		1
-65	M81714/60-20-01		.TERMINAL BLOCK		4
	M81714/60-20-02		.TERMINAL BLOCK		2
	M81714/60-20-03		.TERMINAL BLOCK		3
-66	MS27488-20		.PLUG - END SEAL		22
-67	SJT507504		.RACK ASSY - (V58982)		1
-68	SJT505504		.RACK ASSY - (V58982)		1
-69	MS35207-264		.SCREW		8
	AN960KD10LL		.WASHER		4
-70	NAS1831A6E32		.POST		4
-71	41A-90904-158		.LABEL - (TB218)		1
-72	41A-90904-160		.LABEL - (TB219)		1
	NW4528142-1		JUMPER INSTL - BONDING (SEE SECTION 12)		REF
-73	M83413/8-A06BB		.JUMPER ASSY		1
-74	MS35206-245		.SCREW		1
	AN960JD8L		.WASHER		1
	MS21042L08		.NUT		1
-75	MS35207-265		.SCREW		1
	AN960JD10L		.WASHER		2
	AN960-10L		.WASHER		1
	MS35338-43		.WASHER		1
	MS21042L3		.NUT		1
	41A-90963-1		EQUIPMENT INSTL - INSTRUMENT PANEL (FRONT FACE) (SEE SECTION 13)		REF
-76	MS25089-3C		.SWITCH - PRESET FREQ (SEE SECTION 13)		REF
-77	245-976054-000		.SELECTOR - UHF CHANNEL (SEE SECTION 13)		REF
-78	95-41-52-B6-57145		.SWITCH - PRESET CONT (SEE SECTION 13)		REF
-79	ID-1961B/ARC-164(V)		INDICATOR - UHF FREQUENCY CHANNEL (SEE SECTION 13)		REF
	CAE9513001-1		GUARD ASSY - LDG GEAR PANEL LEVER (V35598) (IAW C-12-114-000/CF-520)	A	1
-80	CAE9513002-1		.HOOD ASSY (V35598)	A	1
-81	CAE9513003-1		.PLATE SUBASSY (V35598)	A	1
-82	MS20253P2-150L		.PIN - HINGE	A	1
-83	LS1010-180		.SPRING - HINGE	A	1
	4601107-1	*	PANEL MODIFICATION - VOR (SEE SECTION 13)		REF
-84	MS24523-22	*	.SWITCH - TOGGLE ADF		1
R -85	4601143-1	*	.PLATE - MOUNTING, FOR FREQUENCY CARD		1
R -86	4601144-1	*	.CARD - FREQUENCY (LOCAL MANUFACTURE)		REF
R -87	4601107-2	*	.PANEL - LIGHTING PCB (ALTERED ITEM)		1
R -88	4601107-3	*	.PANEL - VOR (MADE FROM 41A-50733) (ALTERED ITEM)		1
			-000-		
		*	IAW C-12-114-000/CD-046		
R		A	REFER TO C-12-114-000/CF-547 FOR REMOVAL		

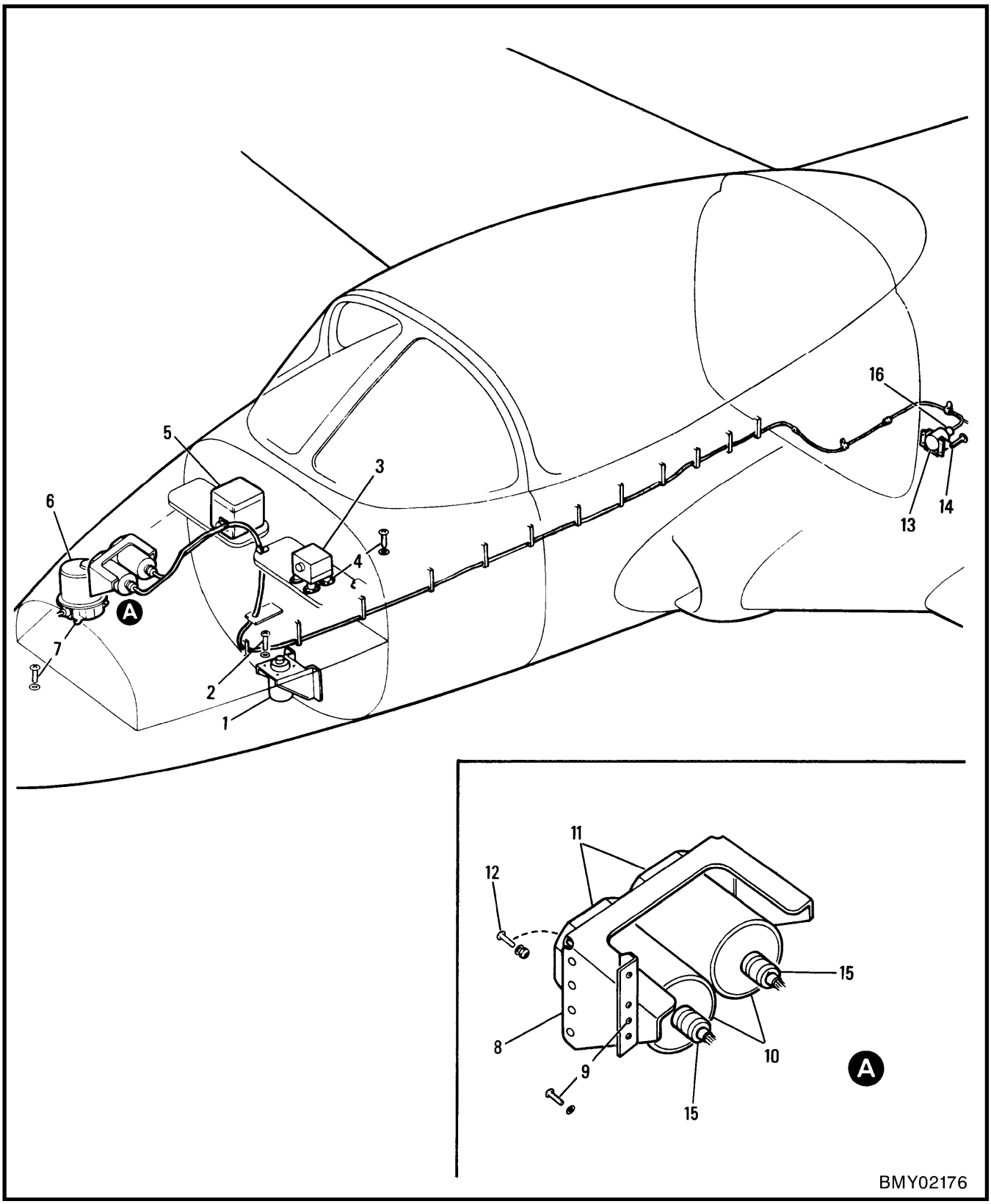

Figure 2-14-3 Forward Fuselage Instrument Equipment

FIGURE AND INDEX NUMBER	GROUP INSTRUMENT EQUIPMENT MAJOR ASSEMBLY FORWARD FUSELAGE INSTRUMENT EQUIPMENT PART NUMBER	1 2 3 4 5 6 7 NOMENCLATURE	EFFEC-TIVITY	UNITS PER ASSY
2-14-3 -	41A-42100	ELECTRICAL & ELEC EQUIPMENT INSTL - NOSE (SEE SECTION 12)		REF
- 1	ST106N	.TRANSMITTER - HYD PRESSURE 0-2500 PSI (V61349) FOR BKDN SEE C-16-850-000/MN-000		1
		OR		
	ST53A	.TRANSMITTER - HYD PRESSURE 0-2500 PSI		1
		OR		
	09016	.TRANSMITTER - HYD PRESSURE 0-2500 PSI		1
- 2	MS35206-229	.SCREW		4
	AN960D6L	.WASHER		4
- 3	INST8-7	.AMPLIFIER - COMPASS SIGNAL REPEATER FOR BKDN SEE C-57-279-000/MS-000		1
	MT5116A	..MOUNTING BASE, ELEC		1
	AN5070DD632R8	..SCREW		4
	L22BA20	..SHOCKMOUNT (CONNECTOR END)		2
	L22BA07	..SHOCKMOUNT (REAR)		2
- 4	MS35206-245	.SCREW		8
	AN960D8	.WASHER		8
- 5	653278	.AMPLIFIER - (V09708) (TYPE A-2/C CONTROL) FOR BKDN SEE C-57-269-A00/MY-000		1
- 6	90000	.CONTROL - (V09708) (DIR-GYRO TYPE S-3A/C) FOR BKDN SEE C-57-269-E00/MY-000		1
- 7	NAS623-4-5	.SCREW - (GYRO RETAINING)		3
	AN960PD416	.WASHER		3
- 8	NW4505001-1	.BRACKET ASSY - REGISTERING ACCLRM MOUNTING		1
- 9	NAS623-2-2	.SCREW		6
	AN960D8	.WASHER		6
-10	AE322-3B	.REGISTER - (V07213) (M1DD & M2DD) (TYPE 2 ACCELEROMETER) FOR BKDN SEE C-16-683-000/MS-000		2
-11	MS28055-12	.BEZEL - INSTRUMENT MOUNTING		2
-12	MS35206-233	.SCREW		8
	AN960D8	.WASHER		8
	NAS487-13	.NUT		8
	41A-42101	ELECTRICAL & ELECTRONIC EQUIP INSTL - CENTRE FUSELAGE (SEE SECTION 12)		REF
-13	AE320-2C	.SENSOR - (V07213) (Z1DD) (REGISTERING ACCELEROMETER) FOR BKDN SEE C-16-684-000/MS-000		1
-14	MS35206-228	.SCREW		4
	NW4528200-1	WIRING INSTL - NOSE (SEE SECTION 12)		REF
	NW4528324-1	.HARNESS ASSY - (FUSELAGE/NOSE) (SEE SECTION 12)		REF
-15	MS3476L12-10S	..CONNECTOR - (P1DD & P2DD) (ACCLRM RGTR)		2
-16	MS3476L18-32S	..CONNECTOR - (P3DD) (ACCLRM SENSOR)		1
		-000-		

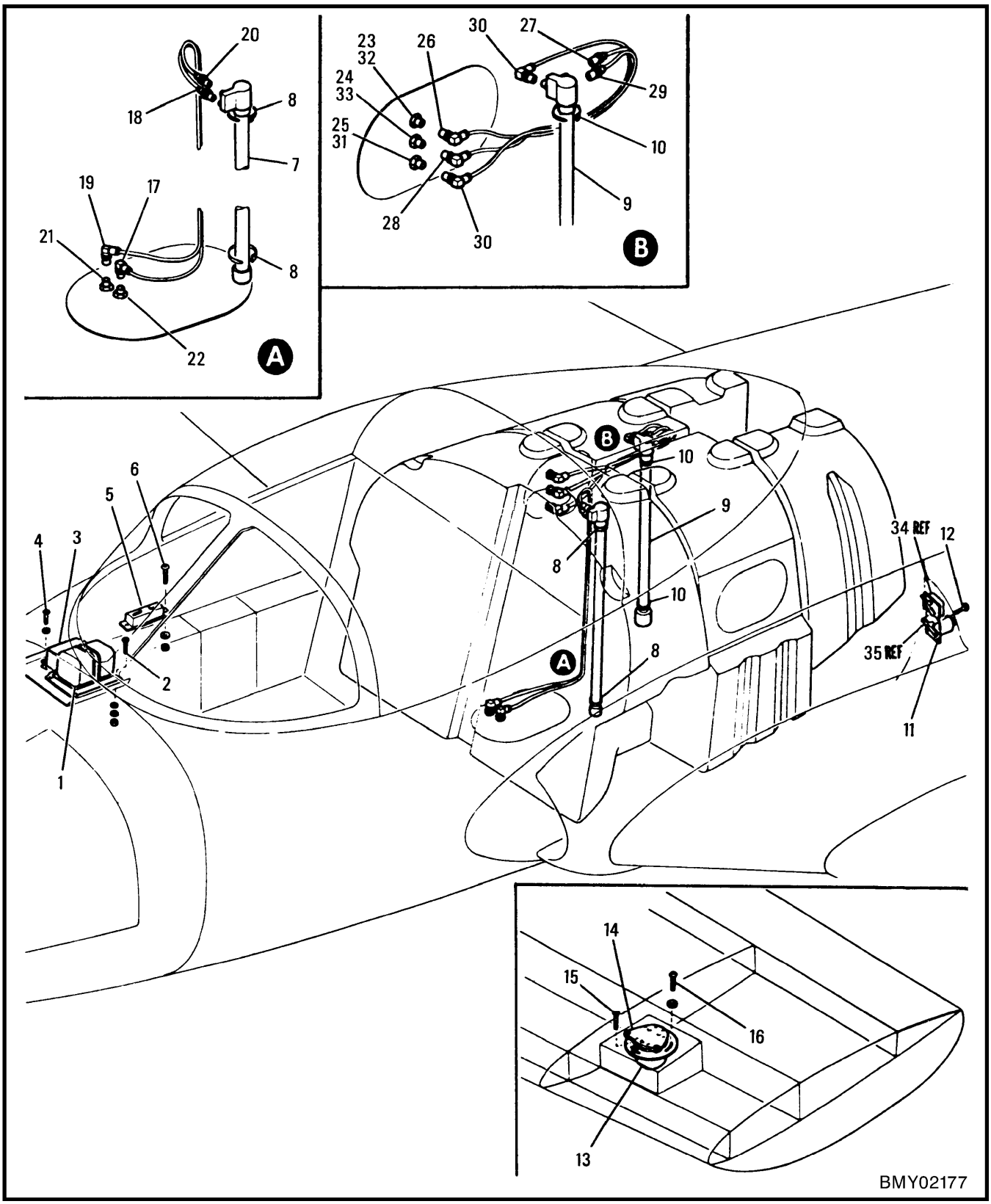

Figure 2-14-4 Centre Fuselage Instrument Equipment

FIGURE AND INDEX NUMBER	GROUP: INSTRUMENT EQUIPMENT MAJOR ASSEMBLY: CENTRE FUSELAGE INSTRUMENT EQUIPMENT PART NUMBER	1 2 3 4 5 6 7 NOMENCLATURE	EFFEC-TIVITY	UNITS PER ASSY
2-14-4 -	41A-42203	ELECTRICAL & ELECTRONIC EQUIP. INSTL - FS 149 BULKHEAD (MODIFIED BY NW4528141-6 & -8) (SEE SECTION 12)		REF
R - 1	124623-01-14	.GYRO - (Z2FB) VERTICAL TYPE MD-1 (V35351) FOR BRKDN, SEE C-16-212-000/MY-000, OR		1
R	124623-01-10	.GYRO - (Z2FB) VERTICAL TYPE MD-1 (V35351) FOR BREAKDOWN, SEE C-16-212-000/MY-000		1
- 2	MS35207-262	.SCREW		4
	S1236-10	.WASHER		AR
	S1236-10L	.WASHER		AR
	AN960PD10L	.WASHER		4
	MS21042L3	.NUT		4
R - 3	138474-01-01	.GYRO - (Z1FB) RATE SWITCHING TYPE MC-1 (V35351) FOR BKDN SEE C-16-216-000/MY-000		1
- 4	MS35206-246	.SCREW		4
	AN960PD8L	.WASHER		4
	SL201-5AA11	.CLIPNUT - (V97393)		4
	41A-52024	ELECTRICAL EQUIP. INSTL - STBD CONSOLE (SEE SECTION 12)		REF
- 5	AN5534-2	.RESISTOR - (R1ED)		1
- 6	MS35206-243	.SCREW		2
	AN960D8L	.WASHER		2
	MS21042L08	.NUT		2
	41A-42101	ELECTRICAL & ELECTRONIC EQUIP. INSTL - CENTRE FUSELAGE (MODIFIED BY NW4528141-6) (SEE SECTION 12)		REF
	41A-43022	.PROBE & HARNESS INSTL - FORWARD FUEL TANK QUANTITY		NP
- 7	FG220A217	..TANK UNIT - (V94580) (IAW 41A-50706-4) FOR BKDN SEE C-16-542-000/MF-000		1
- 8	MS17821-1-9	..STRAP		2
	41A-43021	.PROBE & HARNESS INSTL - CENTRE FUEL TANK QUANTITY (RH) (MODIFIED BY NW4528141-8)		NP
- 9	FG250A45	..TANK UNIT - (V94580) (IAW 41A-50706-8) FOR BKDN SEE C-16-542-000/MF-000		1
-10	MS17821-1-9	..STRAP		2
	41A-90851	FOLLOW UP SYS MECH INSTL - FLAP (SEE SECTION 7)		REF
-11	MIL-T-5583A	.TRANSMITTER - FOLLOW UP FOR BKDN SEE C-16-656-000/MY-000		1
-12	MS24693-28	.SCREW		4
	41A-42103-60	ELECTRICAL EQUIP. INSTL - PORT WING (SEE SECTION 12)		REF
-13	664543	.FLUX VALVE - TYPE C2/C (V09708)		1
-14	656767	.COMPENSATOR - (V09708) (Z2FC) TYPE C2/C		1
-15	MS35214-17	.SCREW		6
-16	MS35214-27	.SCREW		3
	S1246F10-24-31	.WASHER - (V88308)		3
	NW4528200-8	WIRING INSTL - LOWER FUSELAGE (SEE SECTION 12)		REF
	NW4528411-4	.CABLE ASSY - FUEL (SEE SECTION 12)		REF
-17	20P230-5	..CONNECTOR - (V24931) (P9DC)		1
-18	20P228-4	..CONNECTOR - (V24931) (P22DC)		1
	NW4528411-5	.CABLE ASSY - FUEL (SEE SECTION 12)		REF
-19	33-6810-1	..CONNECTOR - (V03554) (P11DC)		1
-20	33-6802-1	..CONNECTOR - (V03554) (P23DC)		1
-21	20AS133-4	.CONNECTOR - (V24931) (J4DC)		1
-22	33-6206-1	.CONNECTOR - (V24931) (J3DC) OR		1
	20A132-3	.CONNECTOR - (V24931) (J3DC)		1
	NW4528200-6	WIRING INSTL - RH WING FILLET (SEE SECTION 12)		REF
-23	33-6206-1	.CONNECTOR - (V24931) (J8DC) OR		1
	20A132-3	.CONNECTOR - (V24931) (J8DC)		1
-24	20AS133-4	.CONNECTOR - (V24931) (J9DC)		1

FIGURE AND INDEX NUMBER	GROUP INSTRUMENT EQUIPMENT MAJOR ASSEMBLY CENTRE FUSELAGE INSTRUMENT EQUIPMENT PART NUMBER	1 2 3 4 5 6 7 NOMENCLATURE	EFFEC-TIVITY	UNITS PER ASSY
2-14-4 -25	FB-40-E4	.CONNECTOR - (V24931) (J10DC)		1
	NW4528411-1	.CABLE ASSY - FUEL		1
-26	20P230-5	..CONNECTOR - (V24931) (P19DC)		1
-27	20P228-4	..CONNECTOR - (V24931) (P27DC)		1
	NW4528411-2	.CABLE ASSY - FUEL		1
-28	33-6810-1	..CONNECTOR - (V03554) (P21DC)		1
-29	33-6802-1	..CONNECTOR - (V03554) (P28DC)		1
	NW4528411-3	.CABLE ASSY - FUEL		1
-30	20P172-3	..CONNECTOR - (V24931) (P17DC & P29DC)		2
	NW4528200-4	WIRING INSTL - LH WING FILLET (SEE SECTION 12)		REF
	NW4528400-1	.HARNESS ASSY - LH WING (SEE SECTION 12)		REF
-31	20P172-3	..CONNECTOR - (V24391) (P16DC)		1
-32	20P230-4	..CONNECTOR - (P18DC)		1
-33	33-6810-1	..CONNECTOR - (P20DC)		1
-34	C75509	TRANSMITTER - (STALL WARNING POSITION) (SEE SECTION 12)		REF
-35	41A-90873	LEVER - FLAP POSITION TRANSMITTER (SEE SECTION 7)		REF
		-000-		

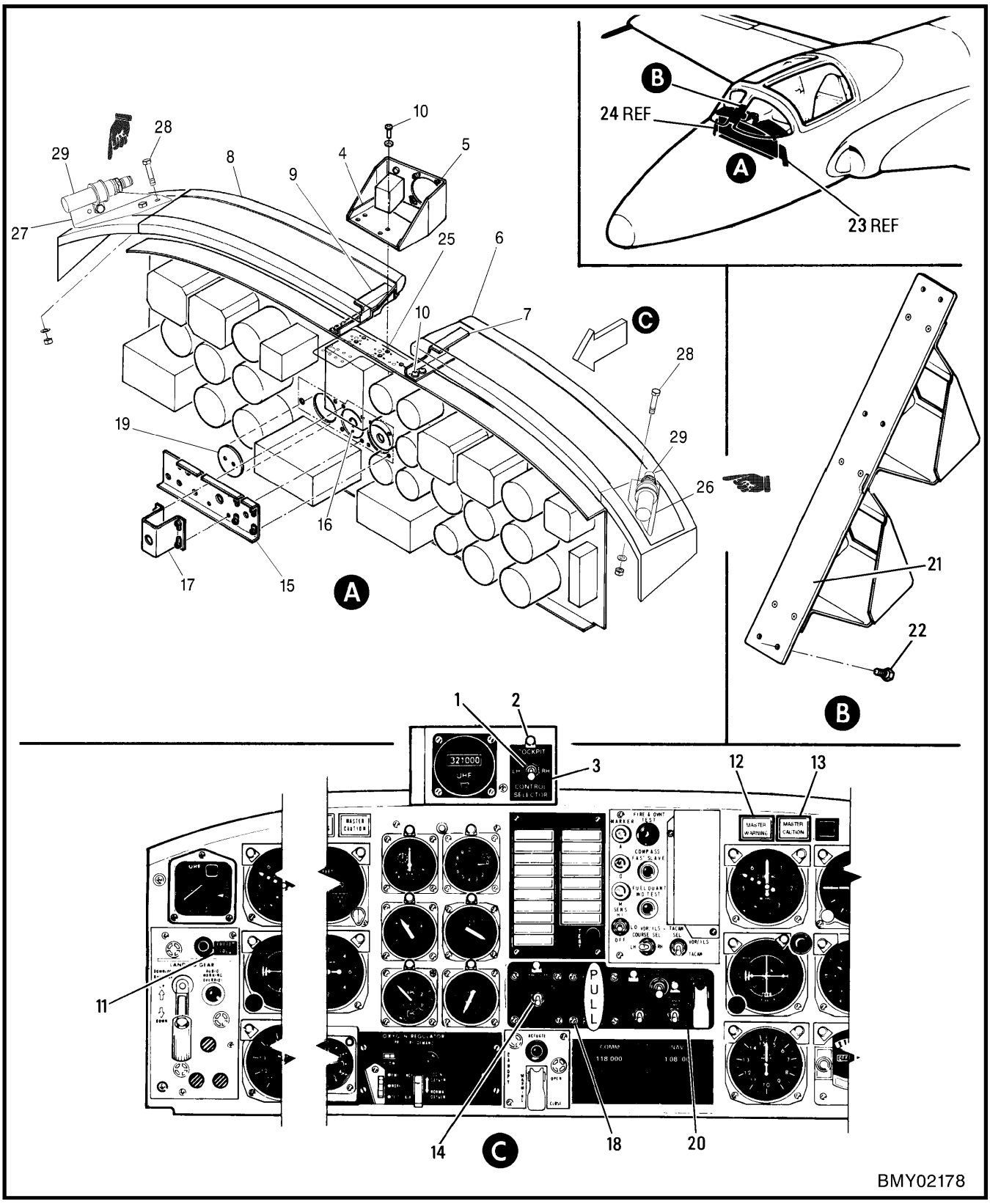

Figure 2-14-5 Cross Cockpit Instrument Panel Mod (For Snowbird Arcft Only)

FIGURE AND INDEX NUMBER	GROUP INSTRUMENT EQUIPMENT MAJOR ASSEMBLY CROSS COCKPIT INSTRUMENT PANEL MOD PART NUMBER	1 2 3 4 5 6 7 NOMENCLATURE	EFFEC-TIVITY	UNITS PER ASSY
2-14-5 -	NW4513200-1	CROSS COCKPIT GENL ASSY (SEE SECTION 1, 7, 8, 11, 12)	A	REF
	NW4513071-1	.BRACKET INSTL - INST PANEL		NP
	NW4513073-1	..MOUNT ASSY		1
	MS21075-3	..NUT		2
- 1	MS24660-23D	...SWITCH - (S2EX)		1
- 2	A-6745C-24	...LAMP - (V72914)		1
- 3	NW4513074-1	...LABEL (COCKPIT LH & RH CONTROL SELECTOR) (MADE FROM 8015 (V09581))		1
- 4	NW4513067-1	...PLATE - FACE		1
- 5	NW4513072-1	...PLATE - MOUNTING		1
- 6	NW4513077-1	..SHROUD - LH (MADE FROM 41A-52011-38 (V86061))		1
- 7	NW4513066-1	..BRACKET - LH		1
- 8	NW4513077-2	..SHROUD - RH (MADE FROM 41A-52011-38 (V86061))		1
- 9	NW4513066-2	..BRACKET - RH		1
-10	MS35207-264	..SCREW		9
	AN960D10L	..WASHER		9
	NW4513076-1	.PANEL INSTL - LDG EDGE LIT (LH)		NP
-11	K41A-58043-26	..DECAL - (PRESET FREQ)		1
	NW4513065-1	.PANEL ASSY - INSTRUMENT (MOD)		NP
R -12	1227-1	..SWITCH ASSY - MASTER WARNING LIGHT (V88308) (DS2EX), OR		2
R	10HA1C1F1J3LRN1R1V13	..SWITCH ASSY (V96182)		2
R -13	1227-2	..SWITCH ASSY - MASTER CAUTION LIGHT (V88308) (DS1EX), OR		2
R	10HA1C1F1J3LAN1R1V13	..SWITCH ASSY (V96182)		2
-14	MS35058-22	..SWITCH - SMOKE ARM (S1SG)		1
-15	NW4513102-1	..CHANNEL ASSY		1
-16	NW4513063-1	..PLATE - BACKING		1
-17	NW4513062-1	..BRACKET - SUPPORT		1
-18	MS35207-264	..SCREW		8
	AN960-10L	..WASHER		8
-19	NW4513204-1	..PLATE - FILLER		1
-20	NW4513064-1	..LABEL - (MADE FROM 8015 (V09581))		1
	NW4513086-1	.BRACKET RELOCATION - ACCLRM		NP
-21	CAE9725806-1	..BRACKET - STANDBY COMPASS REMOUNT (IAW C-12-114-000/CF-531) (SEE FIG. 2-14-7)		1
-22	AN3C3A	..BOLT		4
	MS35338-43	..WASHER - LOCK		4
	AN960C10L	..WASHER - FLAT		4
-23	NW4513036-1	.PANEL INSTL - LH FACIA (SEE FIG. 2-14-6)		REF
-24	NW4513050-1	.PANEL INSTL - RH FACIA (SEE FIG. 2-14-6)		REF
-25	NO NUMBER	.BRACKET - CONNECTOR MOUNT - L-SHAPED (IAW C-12-114-000/CF-531)		1
	NW4514025	.BRACKET INSTALLATION - SMOKE ON LIGHT (IAW C-12-114-000/CF-545)		REF
-26	NW4514024-1	..BRACKET - LH SMOKE ON LIGHT		1
-27	NW4514024-2	..BRACKET - RH SMOKE ON LIGHT		1
-28	AN3-5	..BOLT		4
	AN960-10L	..WASHER		8
	MS21044-4	..NUT		4
-29	MS25041-4	..LIGHT ASSEMBLY		2
	MS21919WDG13	..CLAMP, LOOP		2
	MS35206-229	..SCREW, MACHINE		2
	NAS1149FN616P	..WASHER, FLAT		2
	MS21042-06	..NUT, SELF LOCKING		2
		-000-		
	A	FOR SNOWBIRD AIRCRAFT ONLY		

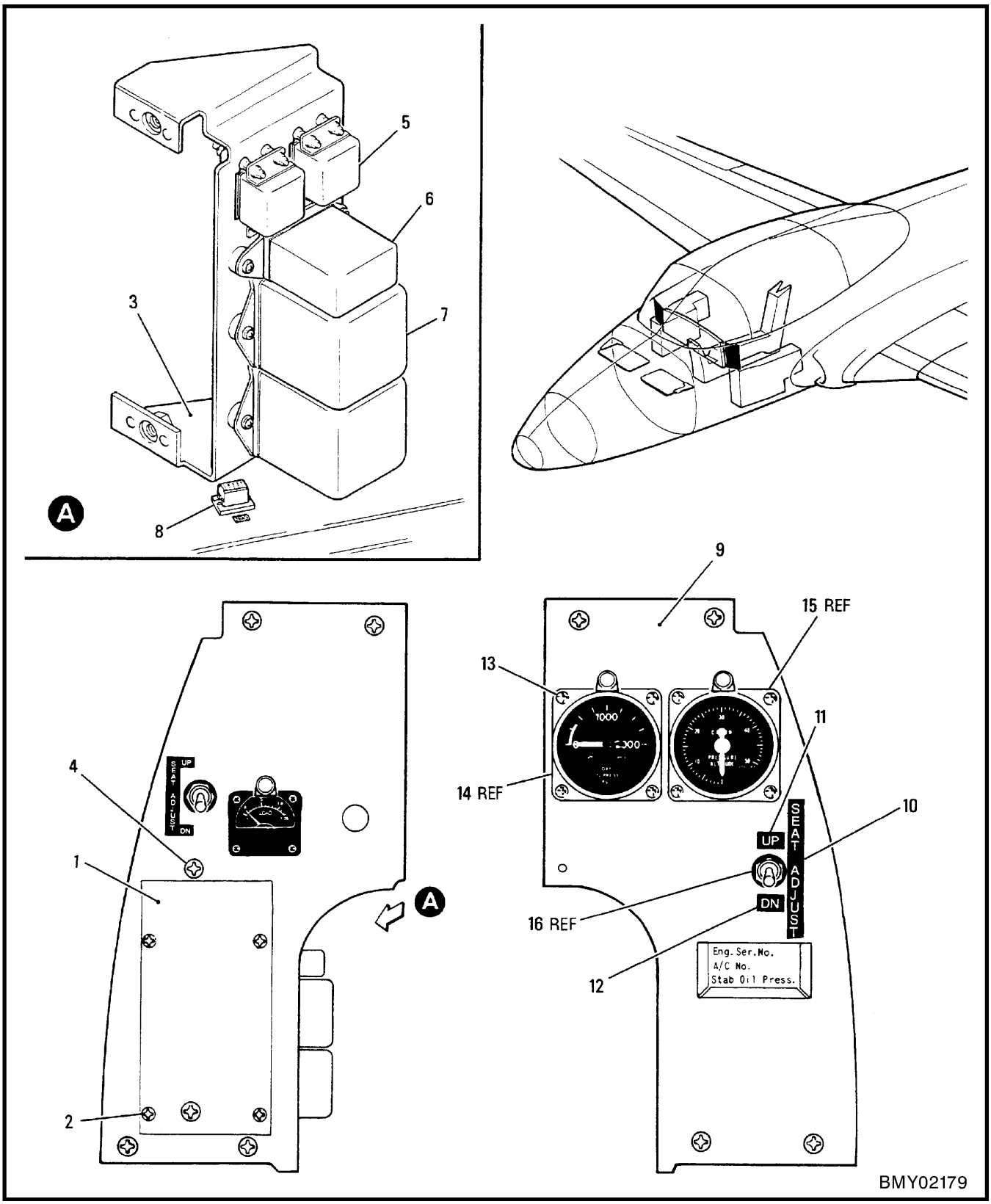

Figure 2-14-6 LH & RH Facia Panel (For Snowbird Arcft Only)

FIGURE AND INDEX NUMBER	GROUP INSTRUMENT EQUIPMENT MAJOR ASSEMBLY LH & RH FACIA PANEL PART NUMBER	1 2 3 4 5 6 7 NOMENCLATURE	EFFEC-TIVITY	UNITS PER ASSY
2-14-6 -	NW4513036-1	PANEL INSTL - LH FACIA (SEE FIG. 2-14-5)	A	NP
- 1	NW4513014-1	.PLATE - BLANKING		1
- 2	MS350207-244	.SCREW		4
- 3	NW4513015-1	.BRACKET		1
- 4	MS35207-262	.SCREW		2
- 5	Y-D4N	.RELAY - (V35344) (K4EX & K5EX)		2
	S0-1066-001	.SOCKET - (V35344) (J4EX & J5EX)		2
	NW4513033-4	.LABEL - (K4EX) (MADE FROM 8015 (V09581))		1
	NW4513033-5	.LABEL - (K5EX) (MADE FROM 8015 (V09581))		1
- 6	9235-4842	.RELAY - (V35344) (K3EX)		1
	S0-1024-7121	.SOCKET - (V35344) (J3EX)		1
	NW4513033-3	.LABEL - (K3EX) (MADE FROM 8015 (V09581))		1
- 7	9223-4833	.RELAY - (V35344) (K1EX & K2EX)		2
	SO-1022-7129	.SOCKET - (V35344) (J1EX & J2EX)		2
	NW4513033-2	.LABEL - (K2EX) (MADE FROM 8015 (V09581))		1
	NW4513033-1	.LABEL - (K1EX) (MADE FROM 8015 (V09581))		1
- 8	M81714/63-20S	.SOCKET - (N230)		1
	NW451303-6	.LABEL - (N230) (MADE FROM 8015 (V09581))		1
	NW4513050-1	PANEL INSTL - RH FACIA (SEE FIG. 2-14-5)		NP
- 9	NW4513049-1	.BLANKING PLATE		1
-10	NW4513052-1	.LABEL - (SEAT ADJUST) (MADE FROM 8015 (V09581))		1
-11	NW4513051-2	.LABEL - (UP) (MADE FROM 8015 (V09581))		1
-12	NW4513051-1	.LABEL - (DN) (MADE FROM 8015 (V09581))		1
-13	MS35214-27	.SCREW		8
	NAS487-15	.NUT		8
-14	AN6011-1B	INDICATOR - (OXYGEN PRESSURE) (RELOCATED FROM INSTRUMENT PANEL) (SEE FIG. 2-14-2)		REF
-15	AC106-1P	ALTIMETER - (CABIN PRESSURE ALTITUDE) (RELOCATED FROM INSTRUMENT PANEL) (SEE FIG. 2-14-2)		REF
-16	MS35058-27	SWITCH - (SEAT ADJUST) (RELOCATED FROM LH FACIA PANEL) (SEE FIG. 2-14-1)		REF
		-000-		
	A	FOR SNOWBIRD ARCFT ONLY		

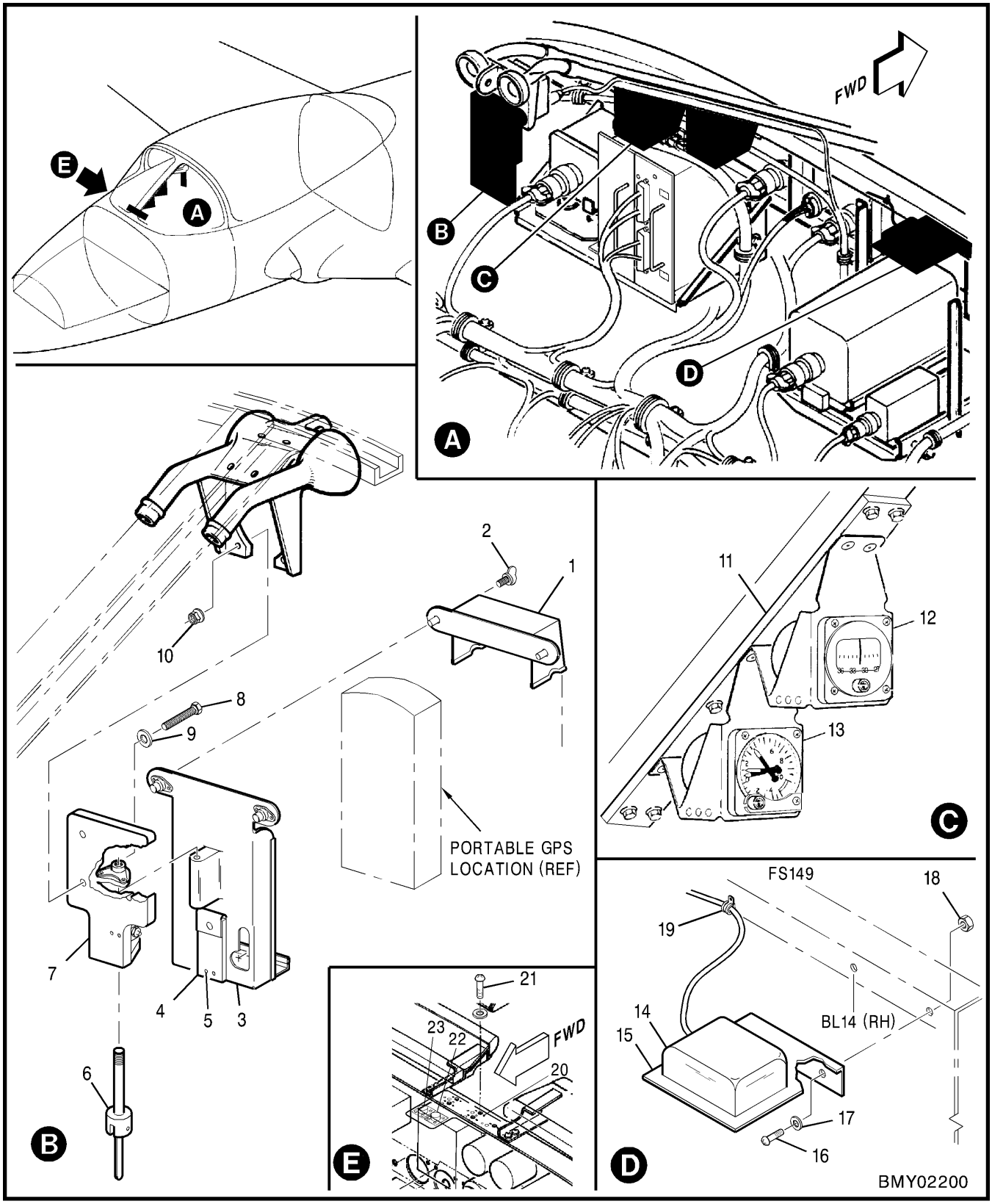

Figure 2-14-7 Handheld GPS Mounting Assy

FIGURE AND INDEX NUMBER	GROUP INSTRUMENT EQUIPMENT MAJOR ASSEMBLY LH & RH FACIA PANEL PART NUMBER	1 2 3 4 5 6 7 NOMENCLATURE	EFFEC-TIVITY	UNITS PER ASSY
2-14-7	CAE9725100-1	HANDHELD GPS INSTL)		RF
	CAE9725100-1	.MOUNTING ASSY - HANDHELD GPS		NP
- 1	CAE9725801-1	..HOOD ASSY - WELDED		NP
	NO NUMBER	...SHEET - ALUMINIUM (M/F QQ-A-250/11)		AR
	CAE9725603-3	...PAD - RUBBER		AR
	NR8	...GROMMET - EDGING		1
- 2	26S8-4	..STUD		2
	2600-LW	..WASHER		2
- 3	CAE9725800-1	..CASE ASSY - WELDED		NP
	NO NUMBER	...CLAD SHEET - ALUMINIUM (M/F QQ-A-250-11)		AR
	CAE9725603-1	...PAD - RUBBER		AR
	NR8	...GROMMET - EDGING		2
- 4	NO NUMBER	..STORAGE POUCH - SWIVEL PIN		1
	ATLAS 7 BLACK	...FABRIC - RIP-STOP CANVAS		AR
	3995	...POST		1
	4005	...STUD		1
	4000	...CAP		1
	4003	...SOCKET		1
- 5	MS20470A4-4	.RIVET		4
	AN960PD10	..WASHER		1
- 6	CAE9725805-1	..PIVOT PIN ASSY		NP
	CAE9725802-1	...BOLT - SWIVEL		NP
	MIL-S-6758	....BAR - STEEL		1
	MS9048-104	...SPRING PIN		1
	CAE9725804-1	...HANDLE - LOCKING		NP
- 7	CAE9725602-1	..SWIVEL BASE ASSY		NP
	LS5281	...EXTRUSION - ALUMINIUM		AR
	AN743-13	...BRACKET - ANGLE		1
	133-3701-401	...CONNECTOR - STOWAGE		1
	MS21081-4	...NUT - SELF-LOCKING		1
- 8	MS35206-246	..SCREW		4
- 9	NAS1149FN832P	..WASHER		4
-10	MS21042-08	..NUT - SELF LOCKING		4
-11	CAE9725806-1	..BRACKET - STANDBY COMPASS REMOUNT		NP
	NO NUMBER	...SHEET - ALUMINIUM (M/F QQ-A-250/5)		AR
	AN3C3A	..BOLT		8
	MS35338-43	..WASHER - LOCK		8
	AN960C10L	..WASHER - FLAT		8
-12	AE341-7C	..COMPASS - STANDBY (SEF FIG. 2-14-1)		REF
R -13	AE340-2B	..ACCELEROMETER (SEE FIG. 2-14-1)		REF
R -14	010-10052-05	..ANTENNA ASSY (V0TRC3)		1
-15	CAE9725600-1	...ANTENNA BRACKET		NP
	NO NUMBER	....SHEET - ALUMINIUM (M/F QQ-A-250/5)		AR
-16	MS35206-245	..SCREW		2
-17	NAS1149FN832P	..WASHER		2
-18	MS21042-08	..NUT		2
-19	MS21919DWG-2	..CLAMP		1
	MS32506-245	..SCREW		1
	NAS1149FN832P	..WASHER		1
	MS21042-08	..NUT - SELF LOCKING		1
-20	NO NUMBER	..BRACKET - CONNECTOR MOUNT (SEE FIG. 2-14-5)		NP
-21	MS35207-264	...SCREW		5
	AN960D10L	..WASHER		5
	MS21059-3	..NUT PLATE - SELF LOCKING		5
	MS20426AD3-7	..RIVET		10
	CAE9725300-3	..DECAL		1
R -22	MS3115-8A	..CONNECTOR - (DUMMY RECEPTACLE)		1
	MS35206-215	..SCREW		4
	NAS1149FN416P	..WASHER		4
R	MS21042-04	..NUT - SELF LOCKING		4
R -23	MS3470L8	.CONNECTOR - (J1TG)		1
R	MS3181-8NA	..CAP - PROTECTIVE		1
	MS35206-215	..SCREW		4
	NAS1149FN416P	..WASHER		4

FIGURE AND INDEX NUMBER	GROUP	INSTRUMENT EQUIPMENT	EFFEC-TIVITY	UNITS PER ASSY
	MAJOR ASSEMBLY	LH & RH FACIA PANEL		
	PART NUMBER	1 2 3 4 5 6 7 NOMENCLATURE		
2-14-7	MS21042-04	..NUT - SELF LOCKING -000 IAW C-12-114-000/CF-531 FOR SNOWBIRD CONFIGURED AIRCRAFT ONLY IAW C-12-114-000/CF-543 FOR NON-SNOWBIRD CONFIGURED AIRCRAFT		4

SECTION 15

PITOT STATIC SYSTEM

TABLE OF CONTENTS

Figure	Title	Page
2-15-1	Cockpit Area Pitot Static System	2-15-2
2-15-2	Wing Pitot Static System	2-15-6

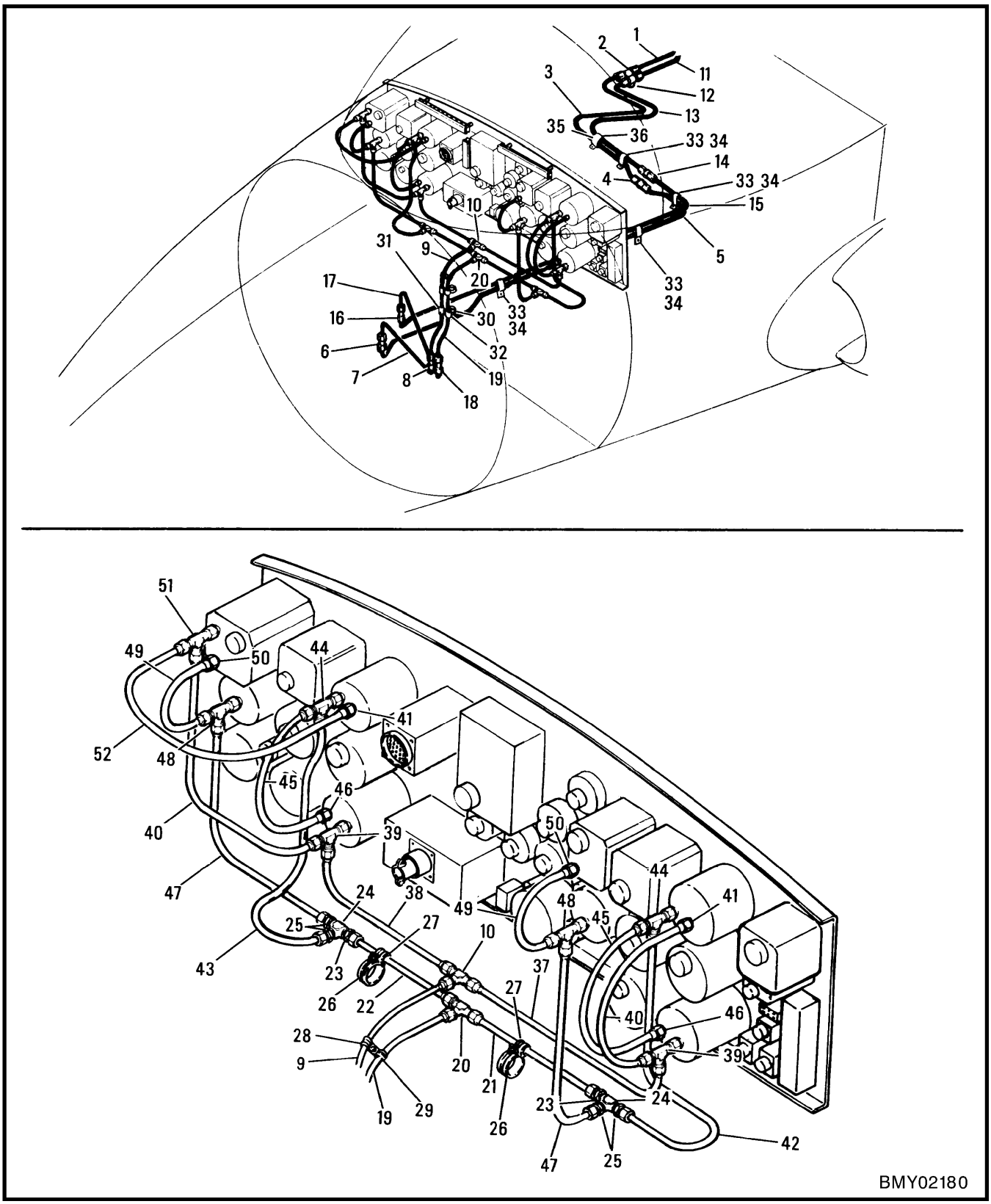

Figure 2-15-1 Cockpit Area Pitot Static System

FIGURE AND INDEX NUMBER	GROUP: PITOT STATIC SYSTEM MAJOR ASSEMBLY: COCKPIT AREA PITOT STATIC SYSTEM PART NUMBER		1 2 3 4 5 6 7 NOMENCLATURE	EFFEC-TIVITY	UNITS PER ASSY
2-15-1 -	41A-42125		LINE INSTL - COCKPIT AREA PITOT STATIC (SEE SECTION 3)		NP
- 1	41A-42126-8		.LINE ASSY - PITOT (WS 40 TO FS 229)		1
- 2	AN804D4		.TEE		1
	AN960PD716		.WASHER		1
	AN924-4D		.NUT		1
	AN929A4		.CAP ASSY		1
- 3	41A-42126-36		.LINE ASSY - PITOT (FS 229 TO BL12)		1
- 4	AN815-4D		.UNION		1
- 5	41A-42126-14		.LINE ASSY - PITOT (BL12 TO FS 162)		1
- 6	AN824-4D		.TEE		1
	AN929A4		.CAP ASSY		1
- 7	41A-42126-16		.LINE ASSY - PITOT (TEE TO ELBOW)		1
- 8	AN837-4D		.ELBOW		1
	AN924-4D		.NUT		1
- 9	41A-42126-18		.LINE ASSY - PITOT (FS 161 TO TEE AT INSTRUMENT PANEL)		1
-10	AN824-4D		.TEE		1
R -11	NW4529013-4	**	.LINE ASSY - STATIC (WS 41 TO FS 229)		1
-12	AN804D6		.TEE		1
	AN960PD916		.WASHER		1
	AN924-6D		.NUT		1
	AN929A6		.CAP ASSY		1
-13	41A-42126-38		.LINE ASSY - STATIC (FS 229 TO BL11)		1
-14	AN815-6D		.UNION		1
-15	41A-42126-26		.LINE ASSY - STATIC (BL11 TO FS 164)		1
-16	AN824-6D		.TEE		1
	AN929A6		.CAP ASSY		1
-17	41A-42126-28		.LINE ASSY - STATIC (FS 164 TEE TO ELBOW)		1
-18	AN837-6D		.ELBOW		1
	AN924-6D		.NUT		1
-19	41A-42126-30		.LINE ASSY - STATIC (FS 161 TO TEE AT INSTRUMENT PANEL)		1
-20	AN824-6D		.TEE		1
-21	41A-42126-32		.LINE ASSY - STATIC (BL8 TO TEE AT INSTRUMENT PANEL LH)		1
-22	41A-42126-34		.LINE ASSY - STATIC (BL8 TO TEE ATINSTRUMENT PANEL RH)		1
-23	AN919-6D		.REDUCER		2
-24	AN938D4		.TEE		2
-25	AN815-4D		.UNION		4
	MS28778-4		.PACKING		6
-26	AN742-28		.CLAMP - (CLIP TO CROSS TUBE)		2
-27	MS21919WG4		.CLAMP		2
	NAS623-3-3		.SCREW		2
	AN960-10L		.WASHER		2
	MS21042L08		.NUT		2
-28	MS21919WG4		.CLAMP		1
-29	MS21919WG6		.CLAMP		1
	AN515PB8R10		.SCREW		1
	AN960PD8L		.WASHER		1
	MS21042L08		.NUT		1
-30	738-14-8		.CLIP - (V00502) (CLIP TO OXYGEN LINE)		2
-31	MS21919WG4		.CLAMP		2
-32	MS21919WG6		.CLAMP		2
	AN515PB8R10		.SCREW		2
	AN960PD8L		.WASHER		2
	MS21042L08		.NUT		2
			***		
R		**	IAW C-12-114-000/CF-496		

FIGURE AND INDEX NUMBER	GROUP PITOT STATIC SYSTEM MAJOR ASSEMBLY COCKPIT AREA PITOT STATIC SYSTEM PART NUMBER		1 2 3 4 5 6 7 NOMENCLATURE	EFFEC-TIVITY	UNITS PER ASSY
2-15-1 -33	445-4-6-2-8		.CLIP - (V00502)		6
	AN515PB8R10		.SCREW		6
	AN960PD8L		.WASHER		6
	MS21042L08		.NUT		2
-34	AN515PB8R10		.SCREW		6
	AN960PD8L		.WASHER		6
	MS21042L08		.NUT		2
-35	MS21919WG4		.CLAMP		1
-36	MS21919WG6		.CLAMP		1
	AN515PB8R10		.SCREW		1
	AN960PD8L		.WASHER		1
	MS21042L08		.NUT		1
	41A-52004-808	*	PANEL ASSY - INSTRUMENT (MODIFIED)		REF
-37	AE1000616E0180		.HOSE ASSY - (V69705) (PITOT)		1
-38	AE1000616E0150		.HOSE ASSY - (V69705) (PITOT)		1
-39	MS20826-4D		.TEE		2
-40	AE1000616E0160		.HOSE ASSY - (V69705) (PITOT)		2
-41	AN816-4D		.NIPPLE		2
-42	AE1000616E0154		.HOSE ASSY - (V69705) (STATIC)		1
-43	AE1000616E0160		.HOSE ASSY - (V69705) (STATIC)		1
-44	MS20826-4D		.TEE		2
-45	AE1000616E0144		.HOSE ASSY - (STATIC) (V00624)		2
-46	AN816-4D		.NIPPLE		2
-47	AE1000616E0160		.HOSE ASSY - (V69705) (STATIC)		2
-48	MS20826-4D		.TEE - PIPE TO TUBE		2
-49	AE1000616E0144		.HOSE ASSY - (V69705) (STATIC)		2
-50	AN916-6D	*	.REDUCER		2
	MS28778-6	*	.PACKING		2
-51	AN804-4D	*	.TEE		1
	AN924-4D	*	.NUT		1
	MS28778-4	*	.PACKING		1
-52	AE1000616E0150	*	.HOSE ASSY - (PITOT)		1
			-000-		
		*	IAW C-12-114-000/CF-357		

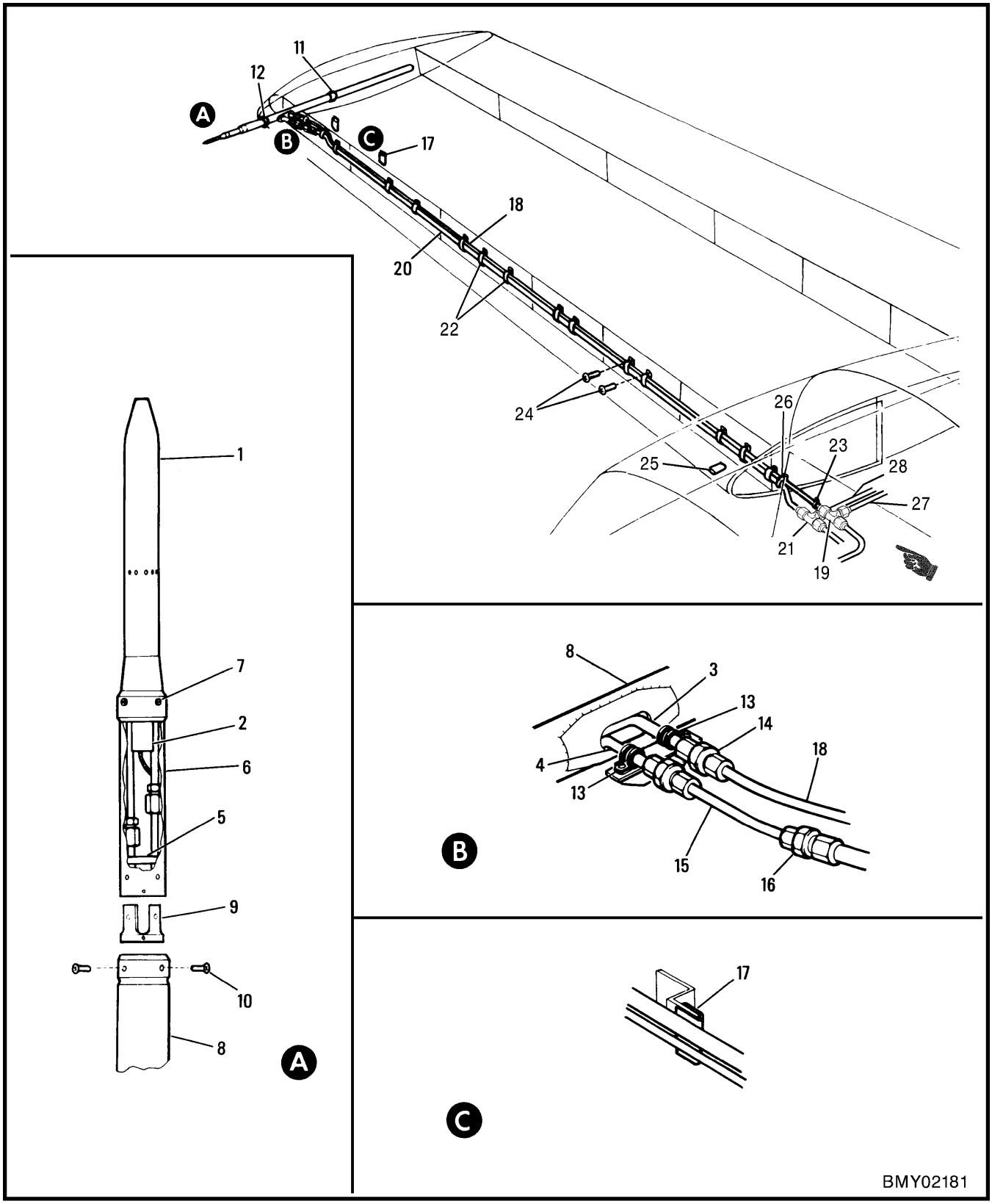

Figure 2-15-2 Wing Pitot Static System

FIGURE AND INDEX NUMBER	GROUP PITOT STATIC SYSTEM MAJOR ASSEMBLY WING PITOT STATIC SYSTEM PART NUMBER		1 2 3 4 5 6 7 NOMENCLATURE	EFFEC-TIVITY	UNITS PER ASSY
2-15-2 -	41A-42124-800		PITOT STATIC SYS INSTL - WING (MODIFIED BY C-12-114-000/CF-196) (SEE SECTION 1)		NP
	41-55750-804		.PITOT STATIC SYS INSTL - WING TIP		NP
	41-55750-806		..BOOM ASSY - PITOT STATIC		1
	41A-57503		...HARNESS ASSY - (PITOT STATIC TUBE)		1
- 1	AN5816-2		....TUBE - PITOT STATIC		1
- 2	AN3115-1		...RECEPTACLE		1
- 3	41-55750-184		...LINE ASSY - PITOT		1
- 4	41-55750-188		...LINE ASSY - STATIC		1
- 5	41-55750-100		...GROMMET		1
- 6	41-55851		...SLEEVE - PITOT STATIC TUBE		1
- 7	AN501A6-4		...SCREW		4
- 8	41-55750-12		...BOOM - PITOT STATIC (FOR SPARES ORDER 41-55750-168) OR		1
	41-55750-168	*	...BOOM ASSY - (SPARE FOR 41-55750-12)		
	MS21266-3N	*	...EDGING - PLASTIC NYLON		AR
- 9	41A-42133		...RETAINER - PITOT STATIC SLEEVE		1
-10	MS24694-47		...SCREW		4
	MS35790-17		...LOCK WASHER		4
-11	AN737TW58		..CLAMP		2
-12	41A-11011		..SEAL - PITOT SUPPORT TUBE		1
-13	MS21919WDG4		..CLAMP		2
	AN530-8R8		..SCREW		2
	AN960PD8L		..WASHER		2
-14	MS21900D4		..ADAPTER		2
-15	41A-42126-42		..LINE ASSY - WS 211-206 STATIC		1
-16	AN919-6D		..REDUCER		1
-17	41-55750-58		..STRIP - RUBBING		2
-18	41A-42126-40		.LINE ASSY - WS 211-40 PITOT		1
R -19	AN824-4D	***	.TEE FITTING - PITOT		1
-20	41A-42126-4		.LINE ASSY - WS 206-41 STATIC		1
R -21	AN824-6D	***	.TEE FITTING - STATIC		1
-22	442-4-6-8		.CLIP - (V00502)		15
-23	AN742D4		.CLAMP		1
-24	MS35206-245	**	.SCREW		17
	AN960PD8L		.WASHER		17
	NAS43DD3-28		.SPACER		17
-25	41A-42124-19		.STRIP - RUBBING		8
-26	MS21919WDG12	**	.CLAMP		1
R -27	NW4529013-2	***	.LINE ASSY - PITOT (OLM)		1
R -28	NW4529013-3	***	.LINE ASSY - STATIC (OLM)		1
			-000-		
		*	IAW C-12-114-000/CF-420		
		**	IAW C-12-114-000/CF-527		
R		***	IAW C-12-114-000/CF-496		

SECTION 16

FURNISHINGS EQUIPMENT

TABLE OF CONTENTS

Figure	Title	Page
2-16-1	Cockpit Furnishings	2-16-2
2-16-2	Cockpit Lining & Trim	2-16-6
2-16-3	Ejection Seats	2-16-10
2-16-4	Ejection Seats	2-16-14
2-16-5	Ejection Seats – AERO Rigid Arm Drogue (ARAD) Installation	2-16-18

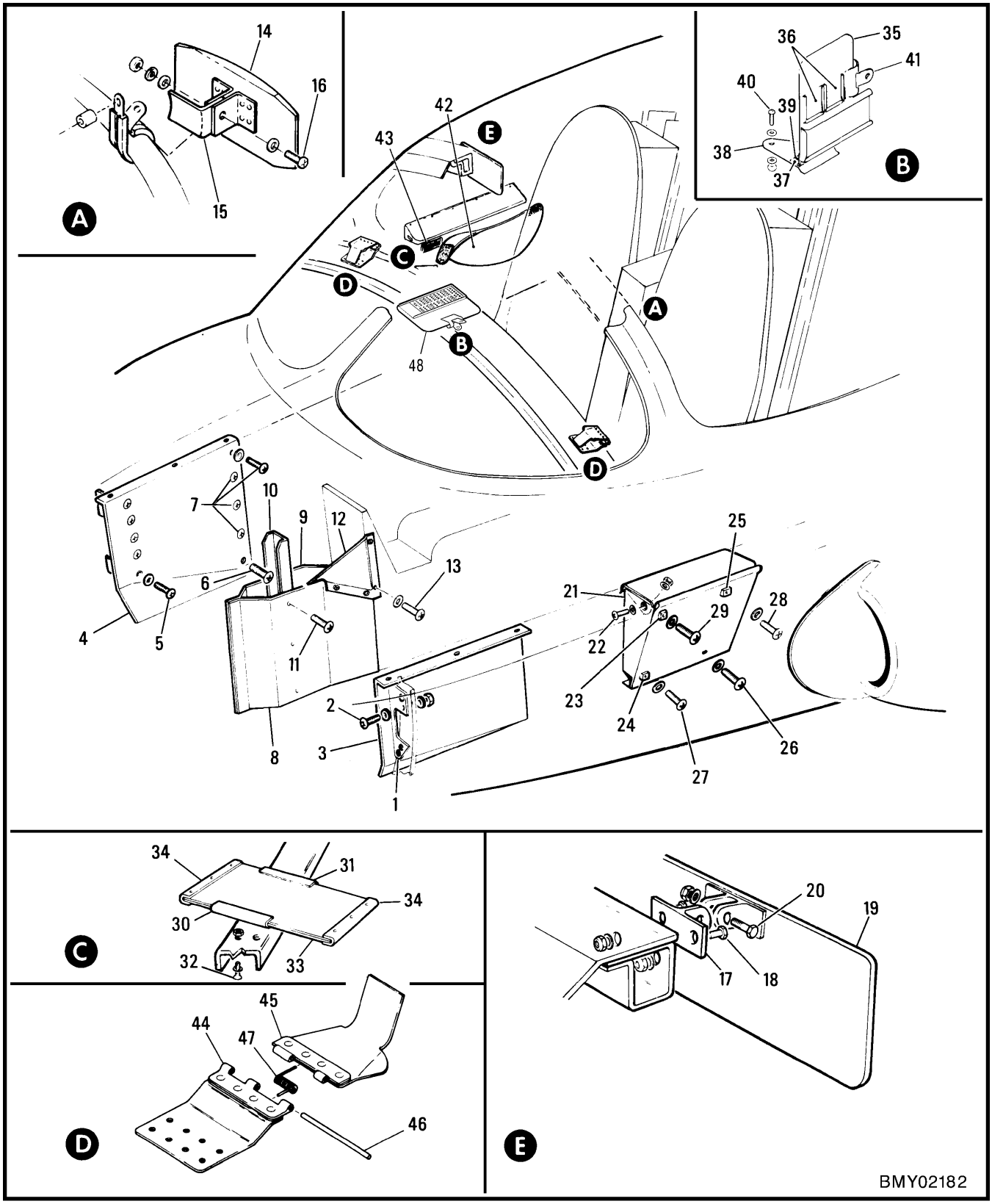

Figure 2-16-1 Cockpit Furnishings

FIGURE AND INDEX NUMBER	GROUP FURNISHINGS EQUIPMENT MAJOR ASSEMBLY COCKPIT FURNISHINGS PART NUMBER		1 2 3 4 5 6 7 NOMENCLATURE	EFFEC-TIVITY	UNITS PER ASSY
2-16-1 -	41A-42200		COCKPIT EQUIP. INSTL - (SEE SECTION 12)		REF
	41A-41550		.LINING & TRIM INSTL - COCKPIT (SEE FIG. 2-16-2)		REF
	41A-40550		.SEAT INSTL - EJECTION (SEE FIG. 2-16-4)		REF
	41A-42209		.PANEL INSTL - LH CONSOLE TRIM		NP
	41A-42209-1		.PANEL INSTL - RH CONSOLE TRIM		NP
- 1	41A-42209-26		..ANGLE ASSY - LH		1
	41A-42209-27		..ANGLE ASSY - RH		1
- 2	AN515-8R8		..SCREW		4
			OR		
	AN515-8R7		..SCREW		
	AN960PD8		..WASHER		8
	MS21042L08		..NUT		4
- 3	41A-42209-34	*	..PANEL ASSY - LH (MOD)		1
- 4	41A-42209-35	*	..PANEL ASSY - RH (MOD)		1
- 5	MS24693C49	*	..SCREW		5
	A3135-017-24A	*	..WASHER - (V78533)		5
- 6	AN515-8R6		..SCREW		8
	SL201-5AA11		..CLIPNUT - (V97393)		5
	SL100-08		..CLIPNUT - (V97393)		3
- 7	MS24693C49	*	..SCREW		4
	A3135-017-24A	*	..WASHER - (V78533)		4
	41A-42210		.PANEL INSTL - CENTRE CONSOLE TRIM		NP
- 8	41A-42210-4		..PANEL		1
- 9	41A-42210-5		..PANEL - (MOD) (IAW C-12-114-000/CF-443)		1
-10	41A-42128		..CHANNEL		1
-11	AN515-8R6		..SCREW		21
	SL201-5AA11		..CLIPNUT - (V97393)		21
-12	41A-42210-26		..COVER - (CENTRE CONSOLE TRIM PANEL)		1
-13	AN515-6R6		..SCREW		4
	AN960D6L		..WASHER		4
	41A-42208		.MIRROR INSTL - REAR VIEW		NP
-14	152NM	**	..MIRROR ASSY		2
-15	NO NUMBER	**	..BRACKET		2
-16	MS35207-264	**	..SCREW		2
	AN960C10L	**	..WASHER		2
	MS35338-43	**	..LOCKWASHER		2
	MS21044N3	**	..NUT		2
-17	41A-42208-2		..SUPPORT		2
-18	NAS501-3-4A		..BOLT		4
	AN960-10L		..WASHER		4
-19	826RNMR		..MIRROR - (V75595)		2
-20	NAS501-3-4A		..BOLT		2
	AN960-10L		..WASHER		2
	MS21042L3		..NUT		2
	41A-42211-2		.MAP STOWAGE INSTL - (LH)		NP
	41A-42211-4		.MAP STOWAGE INSTL - (RH)		NP
	41A-42211-6		..MAP BOX ASSY		1
-21	41A-42211-8		...MAP BOX		1
	41A-42211-52		...STRAP ASSY		1
	41A-42211-10		...COVER		1
-22	MS35206-261		...SCREW		2
	S1246P13-14-40		...WASHER - (V88308)		2
	AN960PD10L		...WASHER		4
	MS21042L3		...NUT		2
-23	41A-42211-12		..PACKING		1
-24	41A-42211-14		..PACKING		1
-25	41A-42211-16		..PACKING		1
		*	IAW C-12-114-000/CF-330		
		**	IAW C-12-114-000/CF-392		

FIGURE AND INDEX NUMBER	GROUP FURNISHINGS EQUIPMENT MAJOR ASSEMBLY COCKPIT FURNISHINGS PART NUMBER		1 2 3 4 5 6 7 NOMENCLATURE	EFFEC-TIVITY	UNITS PER ASSY
2-16-1 -26	MS35207-261		..SCREW		1
-27	MS35207-264		..SCREW		1
-28	MS35207-265		..SCREW		1
-29	MS35207-267		..SCREW		1
	MS35338-145		..WASHER		4
	RM52LHA4972-6-02		..CLIPNUT - (V97393)		2
	RM52LHA4972-8-02		..CLIPNUT - (V97393)		2
	41A-42212		.CHECK LIST INSTL		NP
-30	41A-42212-12		..GUIDE - INBOARD		1
-31	41A-42212-10		..GUIDE - OUTBOARD		1
-32	MS24693-28		..SCREW		4
	AN960-6		..WASHER		4
	MS21042L06		..NUT		4
-33	41A-42212-16	***	..COVER ASSY - CHECK LIST		1
	41A-42212-4		...COVER - TOP		1
	41A-42212-6		...COVER - BOTTOM		1
-34	41A-42212-20		...EDGE - (TOP & BOTTOM)		2
	SE38		...EYELET - (V61957)		6
	AN960PD2		...WASHER		6
	41A-42213		.CHART HOLDER INSTL - LETDOWN		NP
	41A-42213-12		..CHART HOLDER ASSY	001-025	1
	41A-42213-16		..CHRT HOLDER ASSY	026-	1
-35	41A-42213-2	**	...CHART HOLDER	001-025	1
	41A-42213-14		...CHART HOLDER	026-	1
-36	AN5800-1		...HOLDER - CARD (IAW C-12-114-000/CF-440)		2
-37	41A-42213-8		...HINGE		1
-38	41A-42213-4		...PLATE		1
-39	S1349		...SPRING - (V88308)		1
	41A-42213-20		...VELCRO - PILE		1
	41A-42213-19		..VELCRO - HOOK		1
-40	MS35207-264		..SCREW		1
	S1246P13-20-187		..WASHER - (V88308)		1
	AN960PD10L		..WASHER		1
	MS21042L3		..NUT		1
-41	NO NUMBER		..CLIP - PAPER (IAW C-12-114-000/CF-313)		1
-42	NO NUMBER		BLIND FLYING HOOD - PEAK TYPE		1
-43	NO NUMBER		VELCRO HOOK		1
	8240306	*	HOOK ASSY - AIRCREW HELMET		2
-44	8240304-1	*	.HINGE - HALF		1
-45	8240305-1	*	.HINGE - HALF		1
-46	8240310-1	*	.PIN - HINGE		1
-47	S1440	*	.SPRING		1
-48	NO NUMBER	**	LAYOUT - CIRCUIT BREAKER PANEL		1
			-000-		
		*	IAW C-12-114-000/CF-442		
		**	IAW C-12-114-000/CS-037		
		***	IAW C-12-114-000/CS-071		

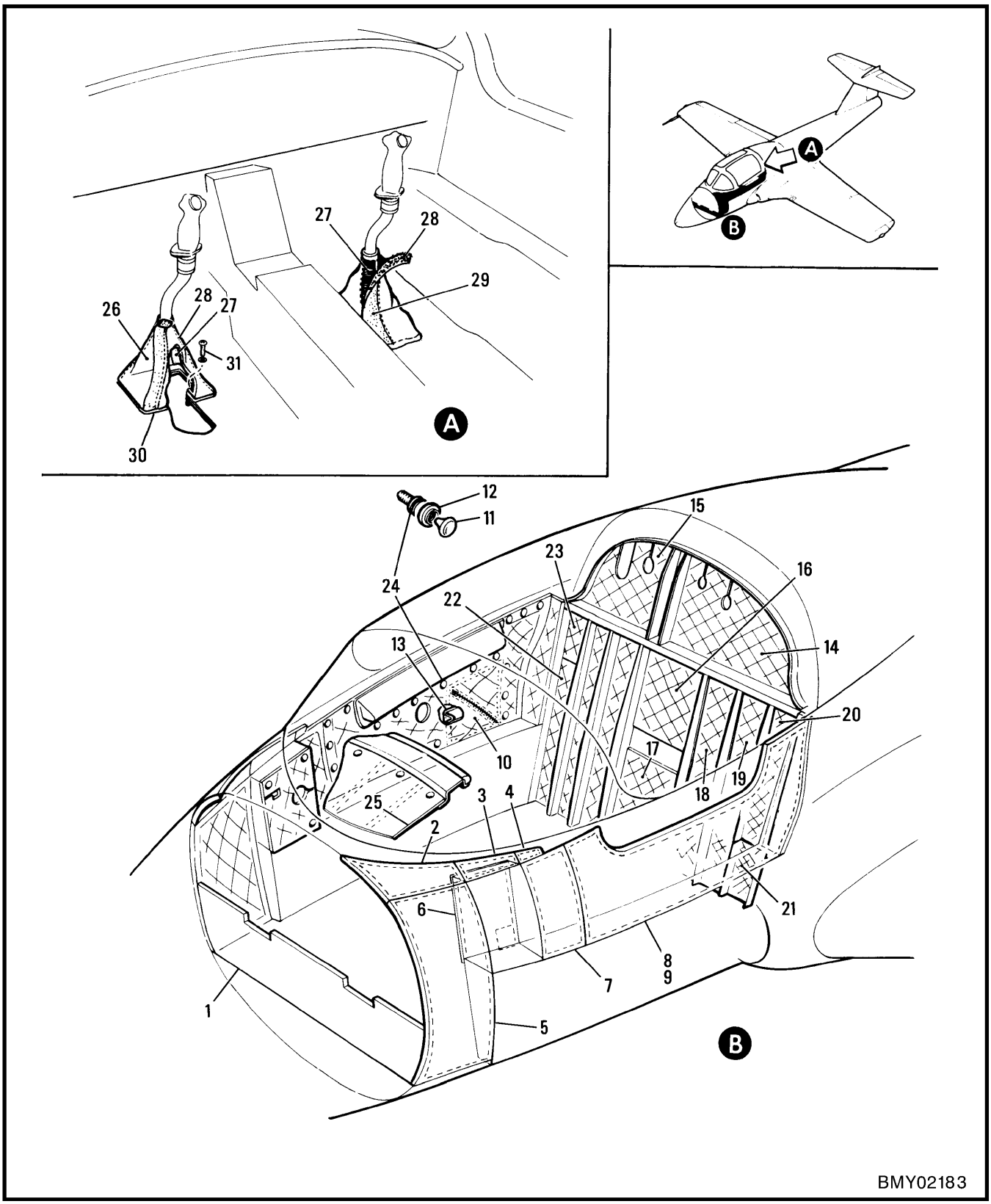

Figure 2-16-2 Cockpit Lining & Trim

FIGURE AND INDEX NUMBER	GROUP FURNISHINGS EQUIPMENT MAJOR ASSEMBLY COCKPIT LINING & TRIM PART NUMBER		1 2 3 4 5 6 7 NOMENCLATURE	EFFEC-TIVITY	UNITS PER ASSY
2-16-2 -	41A-41550		LINING & TRIM INSTL - COCKPIT (SEE FIG. 2-16-1)		NP
	41A-41550-44		.BLANKET ASSY - FS 149		1
- 1	41A-41550-2		..BLANKET ASSY		1
	41A-41550-30		..VELCRO - HOOK		1
- 2	41A-41550-4		.BLANKET ASSY - LH		1
	41A-41550-5		.BLANKET ASSY - RH		1
- 3	41A-41550-56		.BLANKET ASSY - LH		1
	41A-41550-57		.BLANKET ASSY - RH		1
- 4	41A-41550-58		.BLANKET ASSY - LH		1
	41A-41550-59		.BLANKET ASSY - RH		1
- 5	41A-41550-6		.BLANKET ASSY - LH		1
	41A-41550-7		.BLANKET ASSY - RH		1
- 6	41A-41550-46		.BLANKET ASSY - LH		1
	41A-41550-47		.BLANKET ASSY - RH		1
	XX10129A8-777		..BUTTON - (V09736)		4
	XB10224K1105		..SOCKET - (V09736)		4
- 7	41A-41550-40		.BLANKET ASSY - LH		1
	41A-41550-41		.BLANKET ASSY - RH		1
- 8	41A-41550-70		.BLANKET ASSY - LH		1
	41A-41550-49		.BLANKET ASSY - RH		1
	NW4528429		.BLANKET ASSY - RH (AUP)		1
- 9	41A-41550-10		..BLANKET ASSY - LH		1
-10	41A-41550-11		..BLANKET ASSY - RH		1
	41A-41550-30		..VELCRO - HOOK		1
-11	XX10129A8-777		..BUTTON - (V09736)		20
-12	XB10224K1105		..SOCKET - (V09736)		20
-13	41A-41550-60		..POCKET		1
	AN229-2AS32-II		..FASTENER - (LH)		1
	AN229-2AS43-II		..FASTENER - (RH)		1
-14	41A-41550-16		.BLANKET ASSY - LH		1
-15	41A-41550-84		.BLANKET ASSY - RH		1
-16	41A-41550-18		.BLANKET ASSY - (REAR BULKHEAD)		1
-17	41A-41550-62		.BLANKET ASSY - (REAR BULKHEAD)		1
-18	41A-41550-22		.BLANKET ASSY - LH		1
	41A-41550-23		.BLANKET ASSY - RH		1
-19	41A-41550-24		.BLANKET ASSY - LH		1
	41A-41550-25		.BLANKET ASSY - RH		1
-20	41A-41550-26		.BLANKET ASSY - LH		1
-21	41A-41550-80		.BLANKET ASSY - LH		1
-22	41A-41550-27		.BLANKET ASSY - RH		1
-23	41A-41550-64		.BLANKET ASSY - RH		1
-24	XX10376K1105		.STUD - (V09736)		42
	D1068-064-1		.SPEED NUT - (V78533)		42
	BS10412K1105		.EYELET - (V09736)		6
	BS10370K1105		.STUD - (V09736)		6
	41A-41550-28		.VELCRO - PILE		1
	41A-41560		.SHROUD INSTL - REMOVABLE PANEL		NP
-25	41A-41560-2		..SHROUD ASSY		1
	41A-41560-4		...VELCRO - PILE		1
	XX10129A8-002		...BUTTON - (V09736)		9
	XB10224K1105		...SOCKET - (V09736)		9
	41A-41560-3		..VELCRO - HOOK		1
-26	41-41512-800		.BOOT ASSY - CONTROL COLUMN LH		1
	41-41512-801		.BOOT ASSY - CONTROL COLUMN RH		1
-27	80-320	*	..FASTENER - VELCRO HOOK (1 IN X 12 IN)		4
-28	80-320	*	..FASTENER - VELCRO PILE (1 IN X 12 IN)		4
		*	IAW C-12-114-000/CF-395		

FIGURE AND INDEX NUMBER	GROUP FURNISHINGS EQUIPMENT MAJOR ASSEMBLY COCKPIT LINING & TRIM PART NUMBER		1 2 3 4 5 6 7 NOMENCLATURE	EFFEC-TIVITY	UNITS PER ASSY
2-16-2 -29	NO NUMBER	*	..STRIP - LEATHER (1.50 IN X 12 IN)		4
	AN227-8		..STUD		2
	AN227-9		..EYELET		2
	AN227-6		..BUTTON		2
	AN227-7		..SOCKET		2
-30	41A-41562		..GASKET - CONTROL COLUMN		1
-31	AN509-10R10		.SCREW		22
			-000-		
		*	IAW C-12-114-000/CF-395		

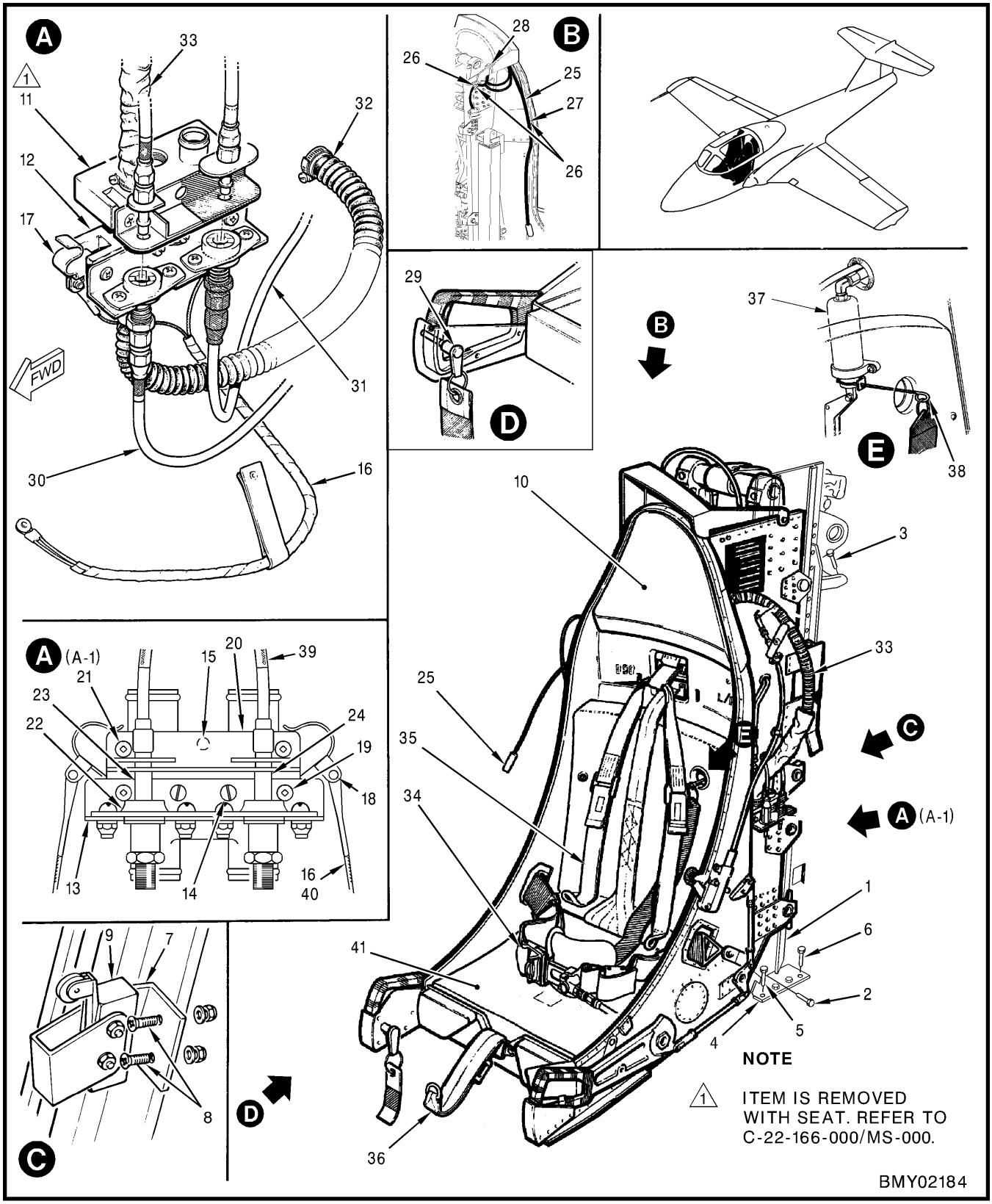

Figure 2-16-3 Ejection Seats

	FIGURE AND INDEX NUMBER	GROUP FURNISHINGS EQUIPMENT MAJOR ASSEMBLY EJECTION SEATS PART NUMBER	1 2 3 4 5 6 7 NOMENCLATURE	EFFEC-TIVITY	UNITS PER ASSY
R	2-16-3 -	41A-40550-820	SEAT INSTL - PILOT LH		1
R		41A-40550-821	SEAT INSTL - PILOT RH		1
	- 1	W805829-802	.SEAT STRUCTURE ASSY - FIXED RAIL (SEE FIG. 2-16-4)		REF
	- 2	NAS1205-8	.BOLT - (SEAT FIXED RAIL RETAINING)		2
		AN960D516	.WASHER		2
		MS21042L5	.NUT		2
	- 3	NAS1106-7	.BOLT - (SEAT FIXED RAIL RETAINING)		2
		AN960D616	.WASHER		2
		41A-40550-13	.SHIM		AR
		MS21042-6	.NUT		2
	- 4	41A-40554	.FITTING - SEAT SUPPORT LOWER (LH)		2
		41A-40554-1	.FITTING - SEAT SUPPORT LOWER (RH)		2
	- 5	NAS6204-9	.BOLT		8
	- 6	NAS6204-5	.BOLT		24
	- 7	41A-40550-22	.BRACKET - SWITCH SUPPORT		1
	- 8	MS24694-53	.SCREW		2
		AN960PD10	.WASHER		2
		MS21042L3	.NUT		2
		ADD3721R12 *	.ACTUATOR - (V94580)		1
	- 9	DT2RA7 *	.SWITCH - (V94580) (S1SX,S2SX)		1
R		41A-40552-822	.SEAT ASSY - EJECTION, CONVENTIONAL – OR,		AR
R		41A-40552-822ARAD ****	.SEAT ASSY - EJECTION, ARAD		AR
R		41A-40552-106	..SEAT STRUCTURE ASSY - EJECTION		1
R	-10	W805832	...SEAT STRUCTURE ASSY - EJECTABLE (SEE C-22-166-000/MS-000)		REF
		41A-40553-802	...DISCONNECT ASSY - SEAT		1
R	-11	41A-40556	....DISCONNECT - UPPER (PART OF SEAT INSTL.)		1
R	-12	41A-40555	....DISCONNECT - LOWER (PART OF A/C INSTL.)		1
R	-13	W809084-3	....BRACKET - SEAT BALLISTIC LOWER DISCONN		1
R	-14	AN501A10-5	....SCREW		2
		AN960-10L	....WASHER		2
		MS28775-113	....PACKING		1
		MS28775-115	....PACKING		1
R	-15	AN565C2H3	....SETSCREW		1
R	-16	41-40515	....LANYARD ASSY, PERSONAL LEAD BLOCK		1
R		LOCAL MANUFACTURE**	.....RETAINING STRAP, LANYARD ASSY, PERSONAL LEAD BLOCK		1
R	-17	41A-40515-6	.....CLIP		2
R	-18	MS20392-2C7	.....PIN		2
		MS24665-132	.....COTTER PIN		2
R	-19	NAS623-3-16	....SCREW		2
		NAS43DD3-10	....SPACER		2
		AN960-10L	....WASHER		2
		MS21042L3	....NUT		2
R	-20	W809081-800	...BRACKET - SEAT DISCONNECT UPPER		1
R	-21	NAS623-3-31	...SCREW		2
		NAS43DD3-16	...SPACER		2
		AN960-10	...WASHER		2
R	-22	4352D4	...SOCKET - (V07217)		2
		NAS623-3-3	...SCREW		4
		AN960PD10L	...WASHER		4
		MS21042L3	...NUT		4
R	-23	4026D4	...NIPPLE - (V07217)		1
R	-24	41A-40552-24	...NIPPLE		1

	FIGURE AND INDEX NUMBER	GROUP FURNISHINGS EQUIPMENT MAJOR ASSEMBLY EJECTION SEATS PART NUMBER		1 2 3 4 5 6 7 NOMENCLATURE	EFFEC-TIVITY	UNITS PER ASSY
R	2-16-3	NW4528200-2		.....CABLE ASSY, COCKPIT INSTALLATION, MIC TEL CORD (SHEET 16 OF 36)		REF
	-25	NW4528407-1		...HARNESS ASSY - SEAT DISCONNECT TO HEADSET JACK		1
		M9177/3-1		....RECEPTACLE - (INITIATOR PHASE DISCONN)		1
		M83723/66R1407N		....PLUG		1
		M85049/52S14N		....STRAIN RELIEF		1
R	-26	MS21919WDG5		...CLAMP		3
R	-27	AN515-8R7		...SCREW		3
		AN960D8L		...WASHER		3
		MS21042L08		...NUT		3
R	-28	LC136		....TAPE, LACING AND TYING		AR
R	-29	41-333-15-4		....PIN, SAFETY, LEG GUARD		1
R	-30	AE1002208E0452	***	.HOSE, BALLISTIC, LH, TO CHECK VALVE (SEE FIG. 2-3-16)		1
R		AE1002352E0460	***	.HOSE, BALLISTIC, RH, TO CHECK VALVE (SEE FIG. 2-3-16)		1
R	-31	MS8000-E-0350A	***	.HOSE, BALLISTIC, TO SEAT CATAPULT		2
R	-32	AN6003T12A	***	.TUBE ASSY, LH AND RH INLET TO DISCONNECT, (SEE FIG. 2-11-1)		2
R	-33	S1451-24	***	.HOSE ASSY, OXYGEN (SEE FIG. 2-11-1)		REF
R		MS22055B24	***	..HOSE ASSY, OXYGEN (SEE FIG. 2-11-1)		REF
R		S1453	***	..SLEEVE PROTECTIVE (MANUFACTURE AS PER C-22-166-000/MS-000, PART 3)		2
R		AN737TW46	***	..CLAMP		2
R		MS22058-1	***	..CONNECTOR		1
R		LOCAL MANUFACTURE	***	..STRAP, OXYGEN HOSE RETENTION (MANUFACTURE AS PER C-22-166-000/MS-000, PART 3)		1
R		0113207-11		INERTIA REEL AND HARNESS ASSY, SHOULDER (SEE C-22-166-000/MS-000)		1
R	-34	990100-3	***	.LAP BELT, HBU-12/B, AUTOMATIC (ARAD SEAT)		1
R		2297-13GM		.LAP BELT – AUTOMATIC RPI (CONVENTIONAL SEAT NOT ILLUSTRATED)		1
R		AN815-3		..UNION		1
R		MS28778-3		..PACKING		1
R	-35	0101800-01		.HARNESS, SHOULDER		1
R	-36	8940039		.STRAP, NEGATIVE G (MANUFACTURE AS PER C-22-166-000/MS-000, PART 3)		1
R		8940042		..BRACKET		2
R		NAS623-3-6		..SCREW		2
R		NAS679C3W		..NUT		2
R		NAS1169DD10L		..WASHER, FINISHING		2
R		AN960D10		..WASHER		2
R	-37	8595409-1		.INITIATOR, CARTRIDGE ACTUATED, M32A1 (SEE C-22-166-000/MS-000)		1
R	-38	602282-2		..PIN, SAFETY		1
R	-39	RCAFL85		..DECAL		1
R	-40	41A-40550-30		.CASING		1
R	-41	NO NUMBER		SURVIVAL KIT SEAT PACK - SEE C-22-115-000/MF-000		1
				-000-		
			*	IAW C-12-114-000/CF-418		
R			**	IAW C-22-166-000/CF-012		
R			***	IAW C-22-166-000/CF-064		
R			****	IAW C-22-166-000/CF-066		

FIGURE AND INDEX NUMBER	GROUP FURNISHINGS EQUIPMENT MAJOR ASSEMBLY EJECTION SEATS PART NUMBER	1 2 3 4 5 6 7 NOMENCLATURE	EFFEC-TIVITY	UNITS PER ASSY
R		ALL ITEMS ON THIS PAGE HAVE BEEN DELETED WITH THIS CHANGE.		

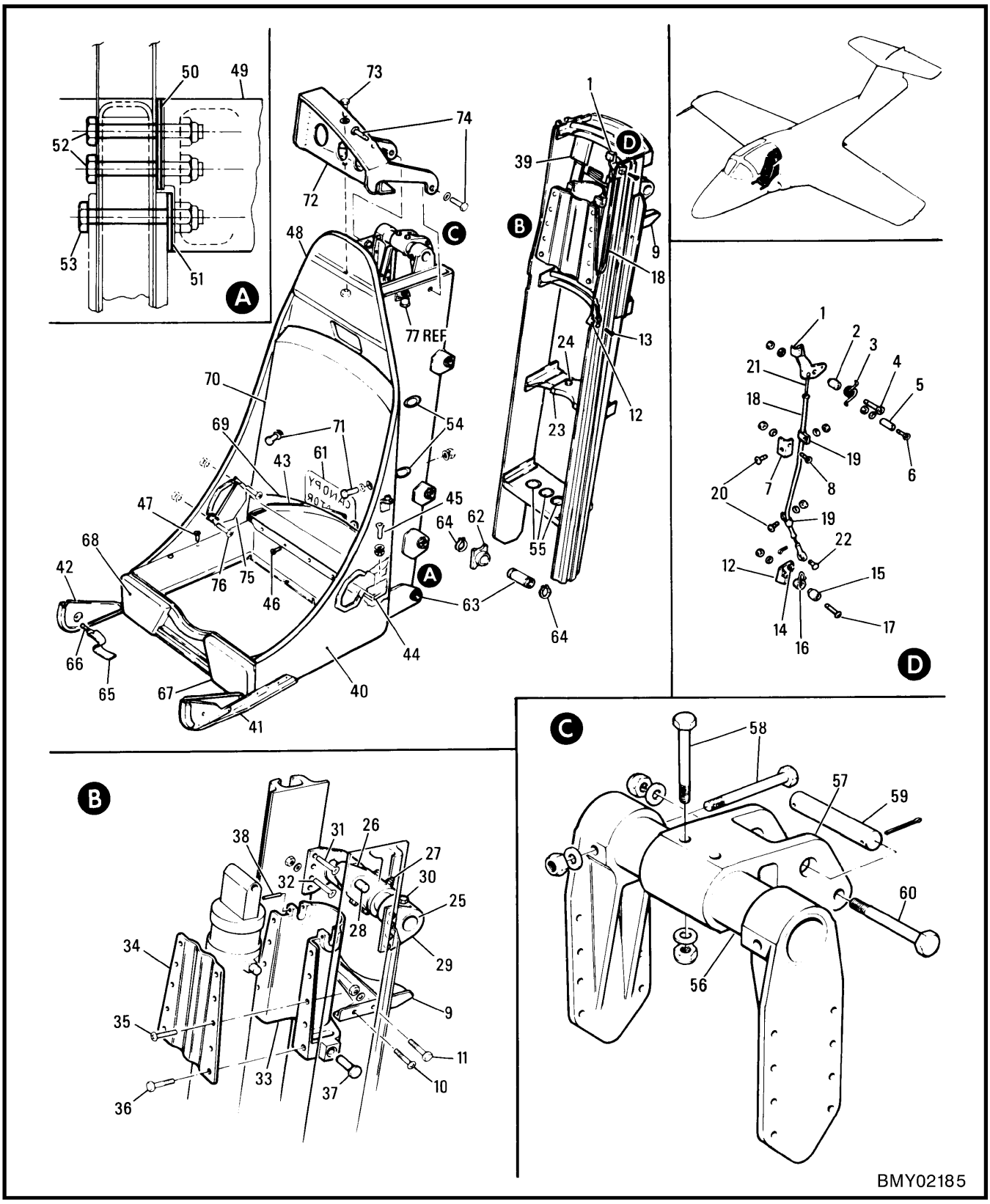

Figure 2-16-4 Ejection Seats

FIGURE AND INDEX NUMBER	GROUP FURNISHINGS EQUIPMENT MAJOR ASSEMBLY EJECTION SEATS PART NUMBER	1 2 3 4 5 6 7 NOMENCLATURE	EFFEC-TIVITY	UNITS PER ASSY
2-16-4 -	W805829-802	SEAT STRUCTURE ASSY - FIXED RAIL (SEE FIG. 2-16-3)		2
	W805839-401	.LEVER ASSY		1
- 1	W805839-201	..LEVER ASSY - (RIVETED)		1
	AN565D1032H4	..SETSCREW - (CABLE LOCK)		1
- 2	W805861-3	.PIVOT		1
- 3	W805888-3	.SPRING		1
- 4	MS24694-62	.SCREW		1
	AN960PD10	.WASHER		1
	MS21042L3	.NUT		1
- 5	NAS42DD5-45	.SPACER		1
- 6	MS24693-55	.SCREW		1
	AN960PD8L	.WASHER		1
	MS21042L3	.NUT		1
- 7	W805859-4	.CLIP		1
- 8	MS24694-53	.SCREW		1
	AN960PD10	.WASHER		1
	MS21042L3	.NUT		1
- 9	W809077-3	.SUPPORT - UPPER TRACK		1
	W805829-9	.SHIM		AR
-10	NAS1204-5	.SCREW		2
-11	AN4-7A	.BOLT		2
	AN960PD416	.WASHER		8
	MS21042L4	.NUT		4
	W809073-800	.LATCH ASSY - INITIATOR		1
-12	W805824-5	..LATCH - INITIATOR		1
-13	AN3-3	..BOLT		1
	MS21042L3	..NUT		1
-14	NAS623-3-2	.SCREW		1
	AN960PD10L	.WASHER		AR
	MS21042L3	.NUT		1
-15	W805861-5	.PIVOT		1
-16	W805842-3	.SPRING - LATCH		1
-17	NAS1203-14	.SCREW		1
	AN960PD10	.WASHER		1
	MS21042L3	.NUT		1
-18	W809075-5	.TUBE - CABLE GUIDE		1
-19	AN742-3	.CLAMP		2
-20	AN23-8A	.BOLT		2
	AN960PD10	.WASHER		2
	MS21042L3	.NUT		2
-21	W809072-401	.CABLE ASSY		1
-22	MS20392-2C9	.PIN		1
	MS24665-150	.COTTER PIN		1
-23	W805893-3	.STOP		1
-24	AN3-7A	.BOLT		3
	AN960PD10	.WASHER		3
	MS21042L3	.NUT		3
	W805829-5	.SUPPORT ASSY		1
-25	W809060-3	..TUBE - ACTUATOR SUPPORT		1
-26	W809059-3	..FITTING - ACTUATOR SUPP		1
-27	NAS464P5LA32	..BOLT		2
	AN960PD516	..WASHER		2
	MS21042L5	..NUT		2
-28	W809076-3	..PIN - ACTUATOR ATT		1
-29	W809058-3	..FITTING - TUBE SUP. LH		1
	W809058-4	..FITTING - TUBE SUP. RH		1

FIGURE AND INDEX NUMBER	GROUP FURNISHINGS EQUIPMENT MAJOR ASSEMBLY EJECTION SEATS PART NUMBER	1 2 3 4 5 6 7 NOMENCLATURE	EFFEC-TIVITY	UNITS PER ASSY
2-16-4 -30	NAS464P5LA32	..BOLT		2
	AN960PD516	..WASHER		2
	MS21042L5	..NUT		2
-31	NAS1203-7	.SCREW		4
-32	NAS1203-9	.SCREW		4
	AN960PD10	.WASHER		8
	MS21042L3	.NUT		8
	W805829-7	.SUPPORT ASSY		1
-33	W809061-401	..SUPPORT		1
-34	W809062-3	..COVER - TRUNNION		1
-35	MS27039-1-08	..SCREW		8
-36	AN3H4A	..BOLT		2
	AN960-10	..WASHER		2
-37	MS20392-5C39	..PIN		2
	MS24665-140	..COTTER PIN		2
-38	W809079-3	..SCREW		2
-39	R5164M1	.ACTUATOR - (V36123) (LINEAR) (IAW W808928) FOR BKDN SEE C-13-D69-000/MS-000		1
	W805832-814	SEAT STRUCTURE ASSY - EJECTABLE (SEE FIG. 2-16-5)		1
	W805836-806	.CONTROL INSTL - EJECTION & SEAT ADJUSTMENT (SEE FIG. 2-16-6)		REF
	W805843-804	.BALLISTIC INSTL - (SEE FIG. 2-16-5)		REF
	W805835-810	.BUCKET ASSY - EJECTION SEAT		1
-40	W805835-205	..FRAME ASSY - SEAT		1
-41	W805947-401	..GUARD ASSY - LEG LH (RIVETED)		1
-42	W805947-402	..GUARD ASSY - LEG RH (RIVETED)		1
-43	W805915-3	..SHELF - PARACHUTE		1
-44	W805835-5	..BLOCK - PARACHUTE SHELF LH		1
	W805835-6	..BLOCK - PARACHUTE SHELF RH		1
-45	AN507-832R16	..SCREW		2
	AN960-8	..WASHER		2
	MS21042L08	..NUT		2
-46	MS27039-1-07	..SCREW		6
	MS27039-1-06	..SCREW		5
	AN960-10L	..WASHER		11
-47	MS27039-1-12	..SCREW - (THROUGH LINER)		4
-48	W805878-3	..PAD - HEADREST		1
-49	W809069-3	..PAD - ROCKET THRUST		1
-50	W805835-7	..SHIM		2
-51	W805835-9	..SHIM		2
-52	AN3-15A	..BOLT		12
-53	AN3-16A	..BOLT		4
	AN960-10L	..WASHER		16
	MS21042L3	..NUT		16
	W805838-810	..STIFFENER ASSY		1
-54	MS35489-22	...GROMMET		4
-55	MS35489-17	...GROMMET		5
	W809065-401	...BEAM ASSY - ROCKET ATTACHMENT		1
-56	W809064-3	....BEAM - ROCKET FITTING ATTACHMENT		1
-57	W809063-3	....FITTING - ROCKET ATTACHMENT		1
-58	NAS464P6LA32	....BOLT		4
	AN960-616	....WASHER		4
	MS20364-624	....NUT		4
-59	W809078-3	...PIN - ROCKET ATTACHMENT		1
	AN960PD816L	...WASHER		2
	MS24665-285	...COTTER PIN		2

FIGURE AND INDEX NUMBER	GROUP FURNISHINGS EQUIPMENT MAJOR ASSEMBLY EJECTION SEATS PART NUMBER	1 2 3 4 5 6 7	NOMENCLATURE	EFFEC-TIVITY	UNITS PER ASSY
2-16-4 -60	AN5-26A		...BOLT		1
	AN960PD516L		...WASHER		2
	MS21042L5		...NUT		1
-61	W805974-3		...NAMEPLATE - (CANOPY INITIATOR)		1
-62	W805884-3		.BLOCK - SLIDE		8
-63	W805882-3		.SHAFT		8
-64	MS16624-68		.RING		16
	W805865-401		.STREAMER ASSY		1
-65	W805865-201		..STREAMER		1
	14		..KEY RING - (PAS)		1
	8		..KEY RING - (PAS)		1
-66	NAS1334A5S1.3		..PIN		1
-67	W805950-4		.PAD - LEGREST LH		1
-68	W805950-3		.PAD - LEGREST RH		1
	41A-42200		COCKPIT EQUIP. INSTL - (SEE FIG. 2-16-1)		REF
-69	41A-00010-90		.BLOCK - PARACHUTE SHELF FILLER		2
-70	41A-00010-89	*	.BLOCK - SEAT BACK FILLER (G.S.M.)		2
-71	AN3-13A		.BOLT		4
	AN970-3		.WASHER		4
	MS21042L3		.NUT		4
	41A-40550-818		SEAT INSTL - PILOT (SEE FIG. 2-16-3)		REF
-72	41A-40568-2		.PENETRATOR ASSY - CANOPY LH		1
	41A-40568-3		.PENETRATOR ASSY - CANOPY RH		1
-73	NAS501-3-6A		.BOLT		1
	AN960PD10		.WASHER		3
	MS21042L3		.NUT		1
-74	S1384-4A4		.BOLT - (V88308)		2
	AN960PD10		.WASHER		2
	MS21042L3		.NUT		2
-75	9535-21-813-8521		SHIELD - (RH SIDE OF SEAT)		1
-76	MS35207-242		SCREW		2
	AN960-8L		WASHER		2
	MS21042L08		NUT		2
-77	AE409-5A		PLUG - OXYGEN STOWAGE (SEE SECTION 11)		REF
			-000-		
		*	IAW C-22-166-000/CF-061		

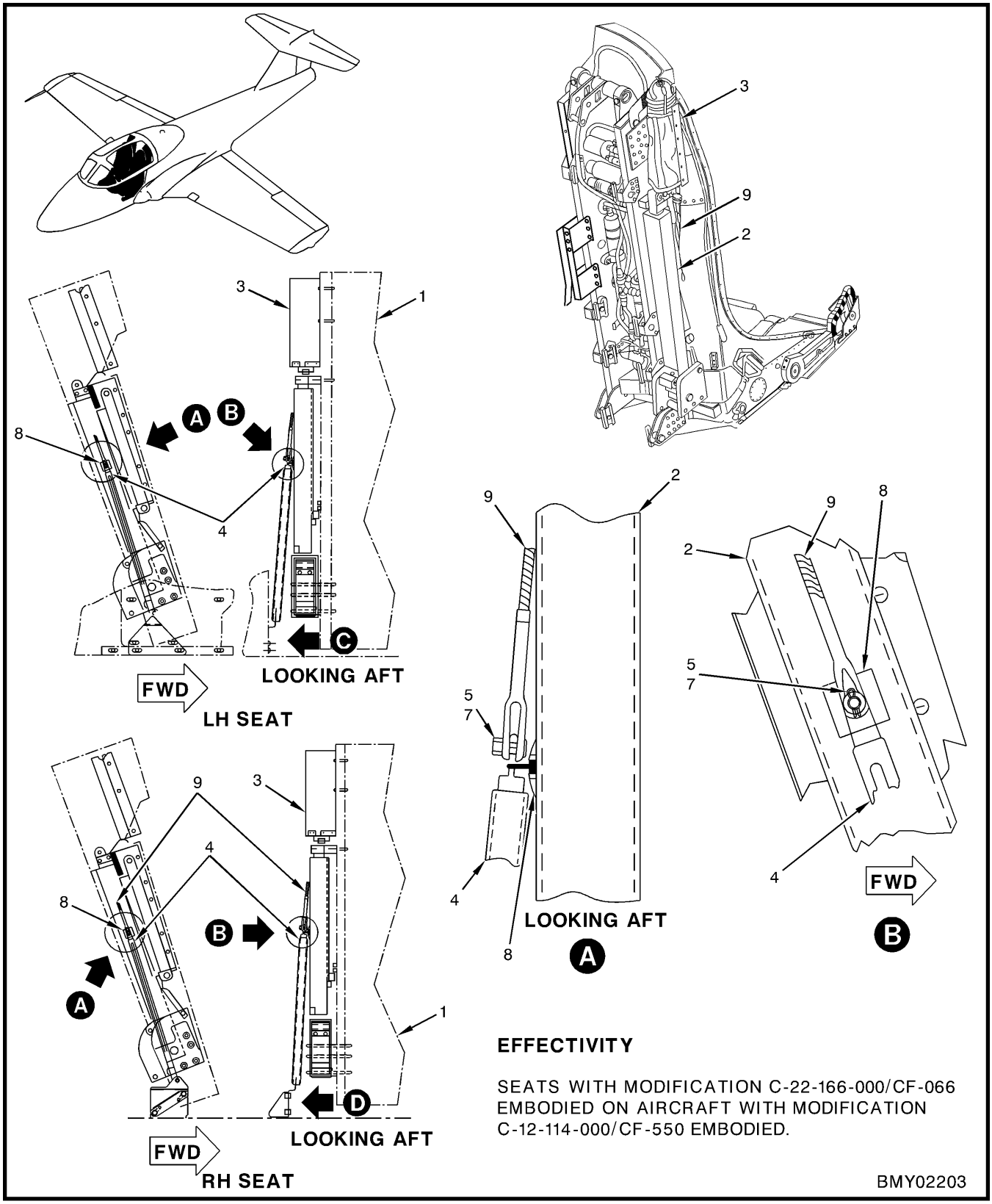

Figure 2-16-5 (Sheet 1 of 2) Ejection Seats – AERO Rigid Arm Drogue (ARAD) Installation

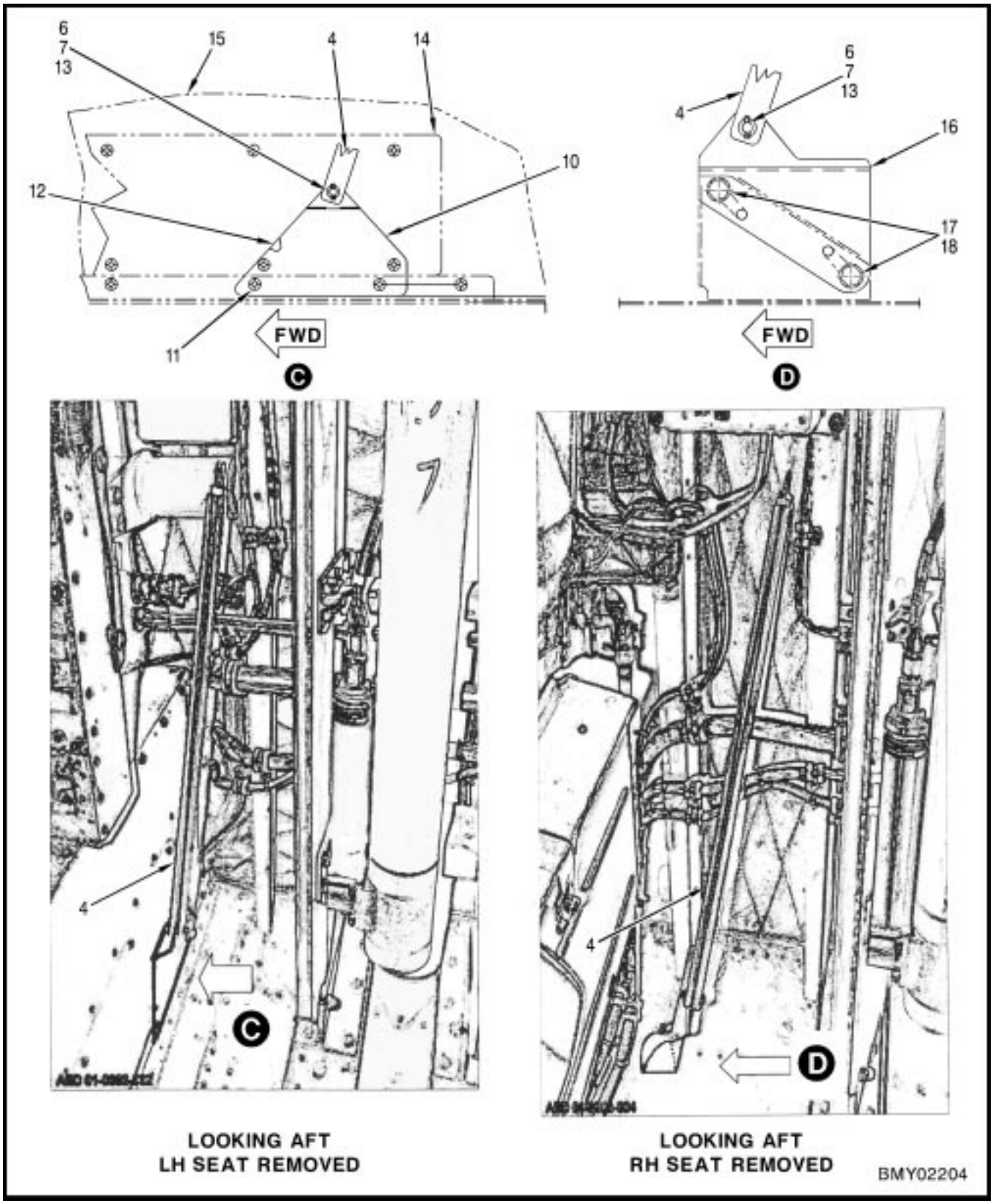

Figure 2-16-5 (Sheet 2 of 2) Ejection Seats – AERO Rigid Arm Drogue (ARAD) Installation

FIGURE AND INDEX NUMBER	GROUP FURNISHINGS EQUIPMENT MAJOR ASSEMBLY INSTALLATION EJECTION SEATS – AERO RIGID ARM DROGUE (ARAD)			EFFEC-TIVITY	UNITS PER ASSY
	PART NUMBER		1 2 3 4 5 6 7 NOMENCLATURE		
2-16-5 -	AERO-T114001		ARM, ARAD TO SEAT INSTALLATION (SEE C-22-166-000/CF-066)		1
- 1	W805832-814		SEAT STRUCTURE ASSY - EJECTABLE (SEE C-22-166-000/MS-000)		REF
- 2	AERO-T114007		.ARM ASSY, ARAD		1
- 3	AERO-T114-40022-1		.DROGUE PARACHUTE ASSY TO SEAT INSTALLATION (SEE C-22-166-000/CF-068)		1
- 4	0325434	*	.ROD ASSY, TELESCOPING (MANUFACTURED AT ATESS, DRAWING NOS. 0325434, 0325437, 0325438)		1
- 5	MS20392-2C7	*	..PIN, STRAIGHT		1
- 6	AN960-10	*	..WASHER		1
- 7	AN380C2-2	*	..PIN, COTTER		2
- 8	ABMM-4	*	..TIEDOWN, MOUNTING		1
- 9	0325431	**	.LANYARD ASSY, INITIATOR, DROGUE/CUTTER (SEE C-22-166-000/MS-000)		1
-10	0325433	*	.BRACKET, MOUNTING, LH SEAT INSTL (MANUFACTURED AT ATESS, DRAWING NO. 0325433)		1
-11	MS35206-246	*	..SCREW (8-32)		4
-12	0325432	*	.PLATE, BRACKET, MOUNTING, LH SEAT INSTL (MANUFACTURED AT ATESS DRAWING NO. 0325432)		1
-13	MS20392-2C25	*	..PIN, STRAIGHT		2
R -14	41A-52202-12		.PANEL, ACCESS (SEE FIG. 2-12-13)		REF
R -15	41A-52202-6		.SHELF ASSY, CENTRE CONSOLE (SEE FIG. 2-12-13)		REF
-16	0325436	*	.BRACKET, MOUNTING, RH SEAT INSTL MANUFACTURED AT ATESS, DRAWING NO. 0325436)		1
-17	AN4-5A	*	..BOLT		2
-18	AN960-416	*	..WASHER		2
		*	IAW C-12-114-000/CF-550		
		**	IAW C-22-166-000/CF-070		

FIGURE 2-16-6 AND PAGES 2-16-22 THROUGH 2-16-24 DELETED BY THIS CHANGE

SECTION 17

LOOSE EQUIPMENT

TABLE OF CONTENTS

Figure	Title	Page
2-17-1	Probe Cover, Lock & Release Pins	2-17-2
2-17-2	Seat & Canopy Safety Pins	2-17-4

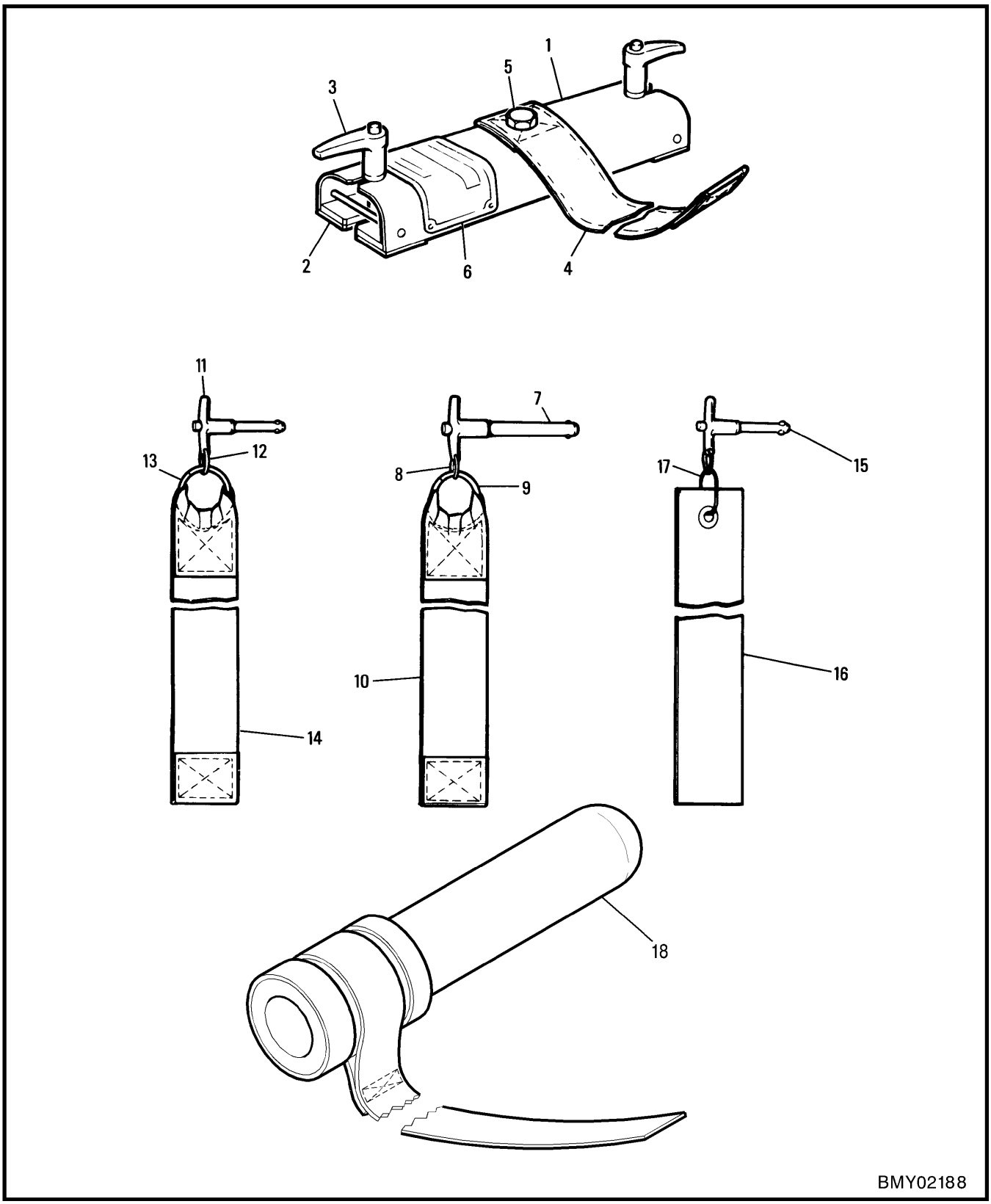

Figure 2-17-1 Probe Cover, Lock & Release Pins

FIGURE AND INDEX NUMBER	GROUP LOOSE EQUIPMENT MAJOR ASSEMBLY PROBE COVER, LOCK & RELEASE PINS PART NUMBER	1 2 3 4 5 6 7 NOMENCLATURE	EFFEC-TIVITY	UNITS PER ASSY
2-17-1 -	41A-40200	LOOSE EQUIPMENT INSTL - (SEE FIG. 1)		NP
	555794-1	.COVER ASSY - STALL WARNING PROBE (CANADAIR 41-323-012)		1
- 1	360308-1	..WELD ASSY - STALL WARNING PROBE COVER		1
- 2	41-323-012-6	..PAD - RUBBER		1
- 3	265196-1	..PIN ASSY - LOCK		2
	NAS1334A5S12D	...PIN		1
	41-323-012-18	...COLLAR		1
- 4	NAS1089-24	..STREAMER		1
- 5	AN4-5A	..BOLT		1
	MS21042L4	..NUT		1
	AN316-4R	..NUT		1
- 6	265200-1	..NAMEPLATE - (MAKE FROM RCAF NO. 22368)		1
	456680-1	.PIN ASSY - MAIN LANDING GEAR LOCK (CANADAIR 41-333-003)		2
	456684-1	..PIN ASSY		1
- 7	NAS1336A2S24	...PIN		1
- 8	41-333-003-4	...RING		1
- 9	8432-1-1/2	..RING - (PAS)		1
-10	456685-1	..STREAMER ASSY		1
	456681-1	.PIN ASSY - NOSE LANDING GEAR LOCK (CANADAIR 41-333-002)		1
	456682-1	..PIN ASSY		1
-11	NAS1334A2S13D	...PIN		1
-12	41-333-002-4	...RING		1
-13	8432-1-1/2	..RING - (PAS)		1
-14	456678-1	..STREAMER ASSY		1
	41-333-018 *	PIN ASSY - GROUND SAFETY (BOMB RACK)		2
-15	NAS1354DC2C47	.PIN - QUICK RELEASE		1
-16	28-27129-2	.STREAMER		1
	MS20230B2	.GROMMET		1
-17	28-27129-4	.RING		1
-18	9040243-1	COVER ASSY - PITOT TUBE (MANUFACTURE LOCALLY IAW C-12-114-000/CS-065)		1
	9040244-1	.TUBE (V36376)		1
	9040245-1	.CAP ASSY (V36376)		1
	9040246-1	.RING - SPLIT (V36376)		1
	9040247-1	.STREAMER (V36376)		1
		-000-		
	*	IAW C-12-114-000/CD-031		

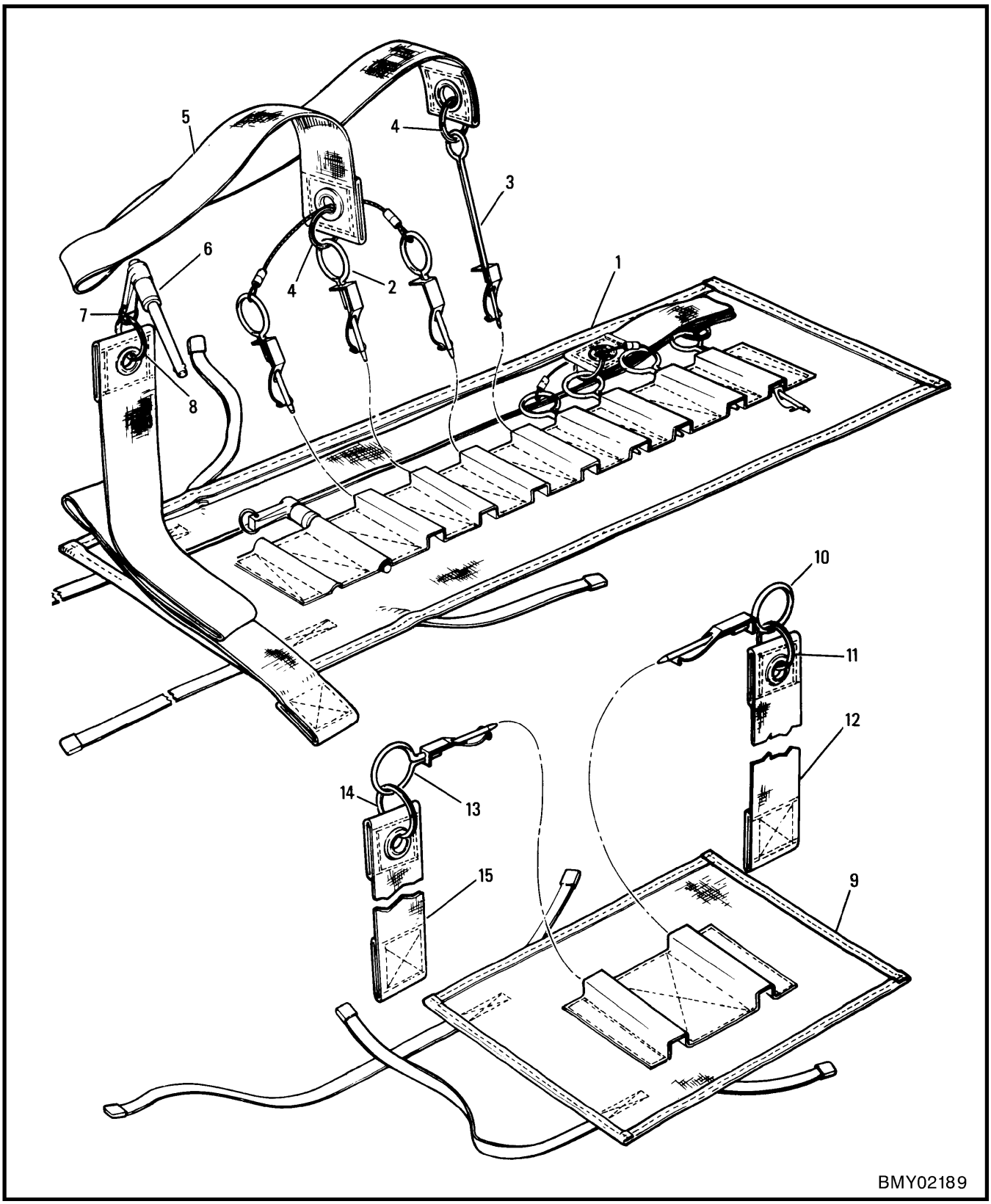

Figure 2-17-2 Seat & Canopy Safety Pins

FIGURE AND INDEX NUMBER	GROUP LOOSE EQUIPMENT MAJOR ASSEMBLY SEAT & CANOPY SAFETY PINS PART NUMBER	1 2 3 4 5 6 7 NOMENCLATURE	EFFEC-TIVITY	UNITS PER ASSY
2-17-2 -	41A-40200	LOOSE EQUIPMENT INSTL - (SEE FIG. 2-17-1)		REF
	555876-1	.KIT - SEAT EJECTION SYSTEM SAFETY PINS (CANADAIR 41-333-013)		1
- 1	602293-1	..CASE ASSY - SEAT EJECTION SAFETY PINS (CANADAIR 41-333-013-2)		1
	555748-1	..PIN ASSY - SEAT INITIATOR (CANADAIR 41-333-015-3)		2
- 2	602282-1	...PIN ASSY - (CANADAIR 41-333-016-1)		1
- 3	602282-2	...PIN ASSY - (CANADAIR 41-333-016-2)		1
- 4	6805-1-1/4	...RING - (CAU)		2
- 5	160563-7	...STREAMER ASSY - (CANADAIR 41-333-015-12)		1
	NO NUMBER	...VELCRO - (V12288) (PILE 2 IN. X 3 IN.E (IAW C-12-114-00/CF-295)		2
	555861-1	..PIN ASSY - LEG GUARD (CANADAIR 41-333-015-4)		2
- 6	NAS1334A5S1.3	...PIN		1
- 7	247-5/8	...RING - (CAU)		1
- 8	6805-1-1/4	...RING - (CAU)		1
	160563-4	...STREAMER ASSY - (CANADAIR 41-333-015-13)		1
	555877-1	.KIT - CANOPY RELEASE SYSTEM SAFETY PINS (CANADAIR 41-333-014)		1
- 9	602294-1	..CASE ASSY - CANOPY RELEASE SAFETY PINS (CANADAIR 41-333-014-2)		1
	555749-1	..PIN ASSY - CANOPY CATAPULT (CANADAIR 41-333-015-5)		1
-10	602282-3	...PIN ASSY - (CANADAIR 41-333-016-3)		1
-11	6805-1-1/4	...RING - (CAU)		1
-12	160563-5	...STREAMER ASSY - (CANADAIR 41-333-015-14)		1
	555750-1	..PIN ASSY - CANOPY EMERGENCY JETTISON (CANADAIR 41-333-015-6)		1
-13	602282-4	...PIN ASSY - (CANADAIR 41-333-016-4)		1
-14	6805-1-1/4	...RING - (CAU)		1
-15	160563-6	...STREAMER ASSY - (CANADAIR 41-333-015-15)		1
		-000-		

PART 3

SPECIAL SERVICE TOOL LIST

TABLE OF CONTENTS

Figure	Title	Page
3-1	Tow Bar, Bridle & Tether Cable	3-2
3-2	Engine Stands, Jacks & Cables	3-4
3-3	Engine Floor Stand & Slings	3-6
3-4	Rig Pins Initiator Dummy & Gauges	3-10
3-5	Flap, Aileron & Spring Tab Rig Nboards	3-14
3-6	Rigging Pins	3-16
3-7	Special Tools & Adaptors	3-20
3-8	Canopy Strut, Dummy Catapult & Initiator	3-24
3-9	Blanking Plugs	3-26

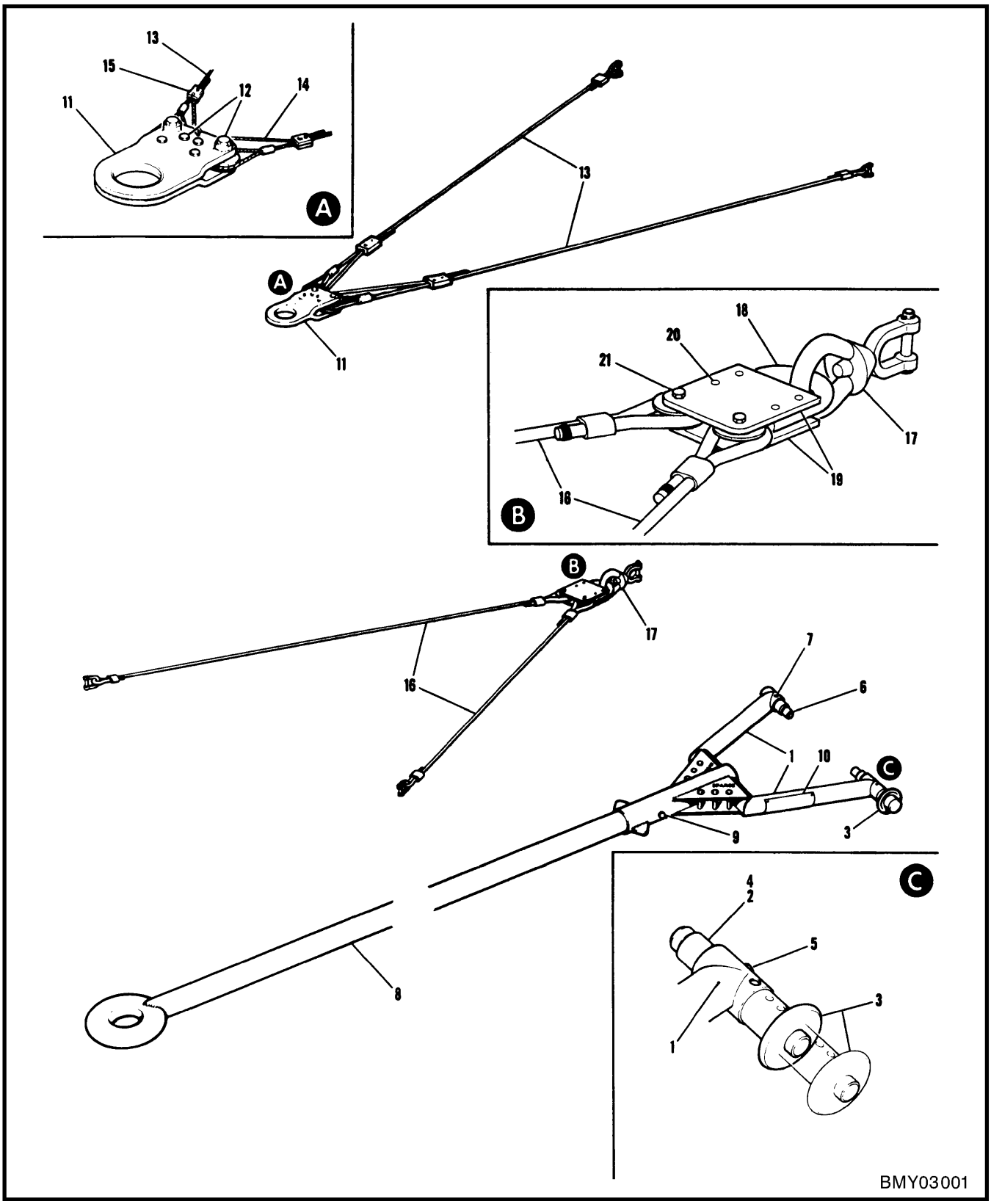

Figure 3-1 Tow Bar, Bridle & Tether Cable

FIGURE AND INDEX NUMBER	GROUP SERVICE TOOLS MAJOR ASSEMBLY TOW BAR, BRIDLE & TETHER CABLE PART NUMBER	1 2 3 4 5 6 7 NOMENCLATURE	EFFEC-TIVITY	UNITS PER ASSY
3-1 -	C63F51596-1	TOW BAR ASSY - (CANADAIR 41-322-001)		1
- 1	C63F51597-1	.FORK ASSY		1
	AN530-10RF6	..SCREW		4
	C63C51599-1	.PIN ASSY		1
- 2	C63B51600-1	..PIN - SLOTTED		1
- 3	C63B51602-1	..PIN - (MAKE FROM BL-SB16BA03S (AYG))		1
- 4	NAS561P6-15	..PIN		1
- 5	AN565E524H6	.SETSCREW		1
- 6	C63B51600-2	.PIN		1
- 7	AN122735	.DOWEL		1
- 8	C63D51598-1	.TOW BAR		1
- 9	AN3-20A	.BOLT - (6 SPARES)		7
	MS21042L3	.NUT		7
-10	C63B51601-1	.NAMEPLATE		1
	AN535-2-3	.SCREW		4
	456675-1	BRIDLE ASSY - TOWING (CANADAIR 41-322-003)		1
-11	456686-1	.BRACKET ASSY		1
	L622	..BUSHING - (V17039)		2
-12	AN5DD14A	.BOLT		6
	AN960-516	.WASHER		6
	MS21042L5	.NUT		6
-13	360318-2	.CABLE ASSY - TOWING		2
-14	41-322-003-10	.CABLE		1
-15	327	.CLAMP - (PAS) (WIRE ROPE)		2
	MS24665-289	.COTTER PIN		1
	456688-1	CABLE ASSY - TETHER (CANADAIR 41-322-015)		1
-16	360318-1	.CABLE ASSY		2
	456687-1	.SWIVEL ASSY		1
-17	6-403	..SWIVEL - (V35043) (1/2 IN. JAW END TYPE)		1
-18	41-322-015-8	..HOOK		1
-19	41-322-015-7	..PLATE		2
-20	41-322-015-9	..PIN		4
-21	AN4-14A	.BOLT		2
	AN960-416	.WASHER		2
	MS21042L4	.NUT		2

-000-

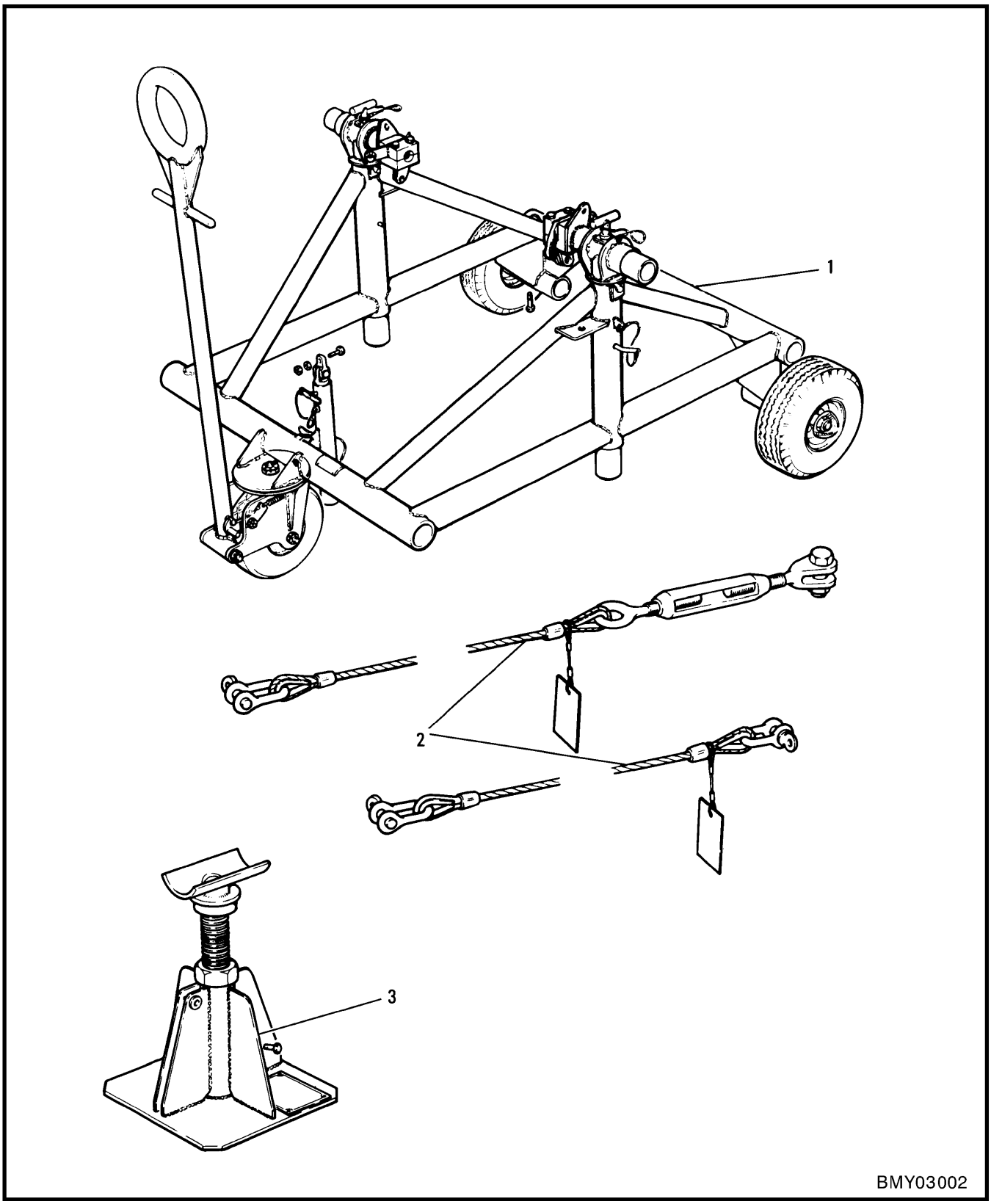

Figure 3-2 Engine Stands, Jacks & Cables

FIGURE AND INDEX NUMBER	GROUP SERVICE TOOLS MAJOR ASSEMBLY ENGINE STANDS, JACKS & CABLES PART NUMBER		1 2 3 4 5 6 7 NOMENCLATURE	EFFEC-TIVITY	UNITS PER ASSY
3-2 -1	C63F51616-1	*	STAND ASSY - J85 CAN-40 ENGINE (CANADAIR 41-322-009)		1
-2	555804-1	*	CABLE SET - ENGINE STAND TIE DOWN (CANADAIR 41-345-001)		1
-3	555805-1	*	SCREW JACK SET - TEST CELL ENGINE STAND (CANADAIR 41-345-002)		1
			-000-		
		*	FOR BRKDN SEE C-19-270-000/MY-000		

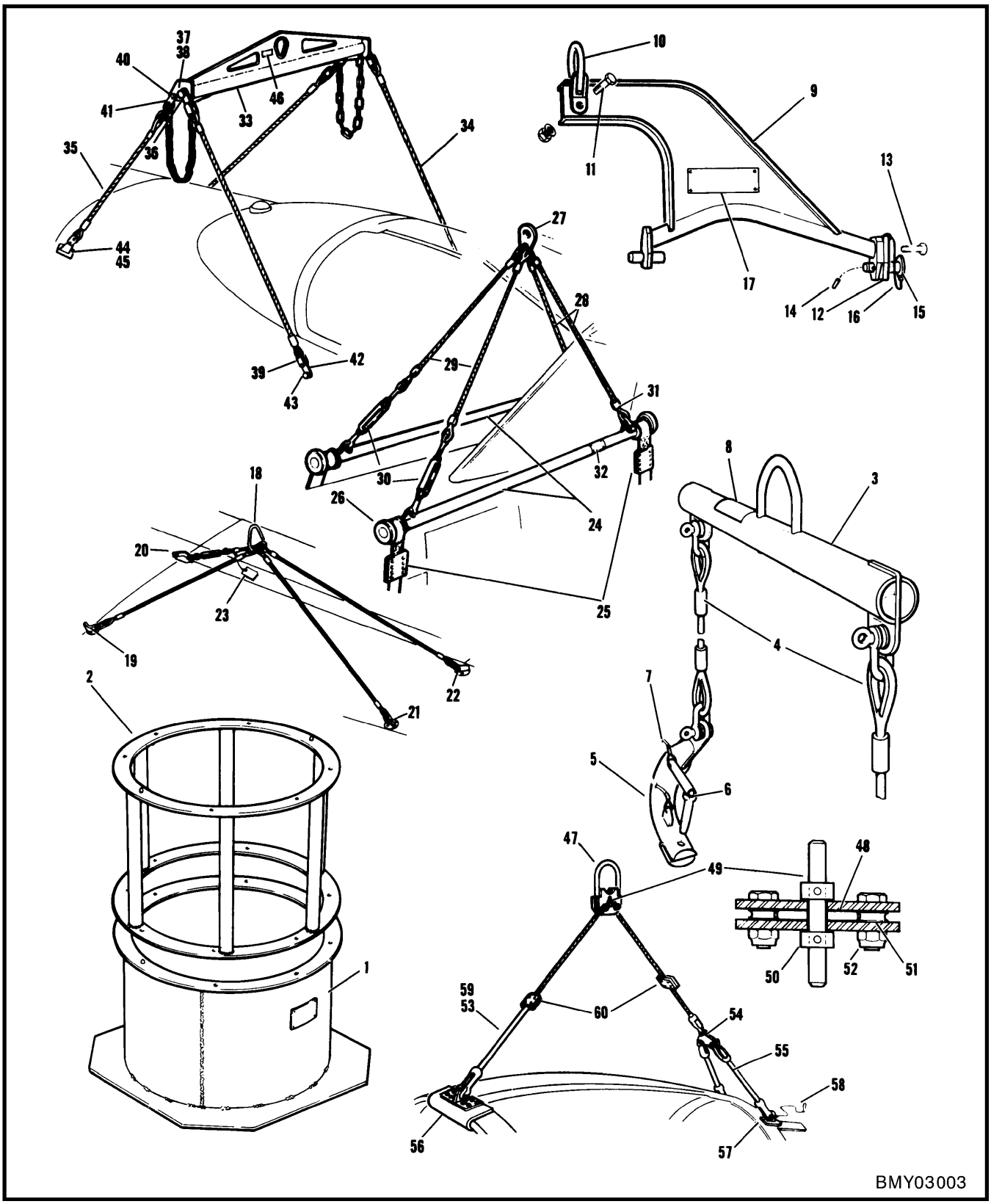

Figure 3-3 Engine Floor Stand & Slings

FIGURE AND INDEX NUMBER	GROUP SERVICE TOOLS MAJOR ASSEMBLY ENGINE FLOOR STAND & SLINGS PART NUMBER	1 2 3 4 5 6 7 NOMENCLATURE	EFFEC-TIVITY	UNITS PER ASSY
3-3 -	265215-1	STAND - MAINTENANCE & STORAGE ENGINE FLOOR (CANADAIR 41-323-019)		1
	265216-1	.BASE ASSY - ENGINE STAND		1
- 1	265197-1	..BASE ASSY - ENGINE STAND (WELDED)		1
	265218-1	..SCREW		2
	265217-1	.ADAPTER ASSY - ENGINE STAND		1
- 2	265198-1	..ADAPTER ASSY - ENGINE STAND (WELDED)		1
	265218-1	..SCREW		2
	265208	.NAMEPLATE		1
	360303-1	SLING ASSY - ENGINE ROTATION (CANADAIR 41-322-016)		1
- 3	360304	.BEAM ASSY - ENGINE SLING		1
- 4	360309-1	.CABLE ASSY - ENGINE SLING		2
	41-322-044-24	..CABLE ASSY		1
- 5	360338-1	.ADAPTER ASSY - SLING ENGINE		1
- 6	360357-1	.PIN ASSY - ADAPTER		1
- 7	41-322-016-18	.CABLE - ADAPTER PIN		1
- 8	360316-1	.NAMEPLATE		1
	AN535-2-3	.SCREW		4
	555795-1	SLING ASSY - ENGINE (CANADAIR 41-322-007)		1
- 9	602260-1	.BEAM ASSY - ENGINE SLING		1
-10	360300-1	.SHACKLE ASSY		1
-11	AN7-13A	.BOLT		1
	AN315C7R	.NUT		1
-12	265180-1	.PLATE - ENGINE ADAPTER		1
-13	AN6-5A	.BOLT		1
-14	AN122694	.DOWEL		2
-15	NAS1337S3S07	.PIN		1
-16	41-322-007-21	.CABLE		1
-17	265181-1	.NAMEPLATE		1
	360294-1	SLING - WING (PORT & STBD) (CANADAIR 41-322-005)		1
-18	360299-1	.CABLE ASSY - WING SLING		1
-19	360295-1	.ADAPTER ASSY - SLING		1
	AN4-6A	..BOLT		2
-20	360296-1	.ADAPTER ASSY - SLING		1
	AN4-7A	..BOLT		2
-21	360297-1	.ADAPTER ASSY		1
-22	360297-2	.ADAPTER ASSY		1
	AN4-6A	..BOLT		2
-23	261437-1	.PLATE - IDENTIFICATION		1
	360298-1	.NAMEPLATE		1
	41-322-005-16	.CABLE - NAMEPLATE		1
	602273-1	SLING - REAR FUSELAGE (CANADAIR 41-322-006)		1
-24	602276-1	.BEAM ASSY - (WELDED)		2
-25	602274-1	.BELT ASSY - FORWARD		1
	602275-1	.BELT ASSY - REAR		1
-26	602277-1	.GUARD ASSY - (BEAM END)		4
	602279-1	.WASHER		4
	MS35207-284	.SCREW		4
	602278-1	.CABLE ASSY		1
-27	41-322-044-5	..LINK - HOIST		1
-28	41-322-044-17	..CABLE ASSY		2
-29	41-322-044-18	..CABLE ASSY		2
-30	41-322-044-21	...TURNBUCKLE - (DWR)		1
-31	41-322-044-20	...SHACKLE - (DWR)		1
-32	602280-1	.NAMEPLATE		1
	41-322-044-33	.HOSE - RUBBER		4
	555833-1	SLING - AIRCRAFT COMPLETE & MAINTENANCE (CANADAIR 41-322-004)		1

FIGURE AND INDEX NUMBER	GROUP SERVICE TOOLS MAJOR ASSEMBLY ENGINE FLOOR STAND & SLINGS PART NUMBER	1 2 3 4 5 6 7 NOMENCLATURE	EFFEC-TIVITY	UNITS PER ASSY
3-3 -33	555834-1	.BEAM ASSY - SLING		1
-34	555842-1	.CABLE ASSY - FORWARD		2
-35	555843-1	.CHAIN & CABLE ASSY - REAR		2
-36	555838-1	.LINK		2
-37	555839-1	.SLEEVE		2
	NAS561P6-24	.PIN		2
-38	AN4-14A	.BOLT		2
	AN960-416	.WASHER		2
	AN315-4R	.NUT		2
-39	555835-1	.CLEVIS		8
-40	MS20392-7C39	.PIN		14
	AN960-416	.WASHER		14
	MS24665-285	.COTTER PIN		14
-41	AN8-17A	.BOLT		2
	AN935-816	.WASHER		2
	AN315-8R	.NUT		2
-42	555836-1	.ADAPTER - FORWARD		2
-43	AN8-12A	.BOLT		2
	555840-1	.BUSHING		2
-44	555837-1	.ADAPTER - REAR LH		1
	555837-2	.ADAPTER - REAR RH		1
-45	AN4-10A	.BOLT		8
-46	555841-1	.NAMEPLATE		1
	AN535-2-4	.SCREW		4
	602261-1	SLING - CANOPY (CANADAIR 41-322-008)		1
	602264-1	.LINK ASSY - HOIST		1
-47	602266-1	..LINK - (WELDED)		1
-48	602265-1	..ROLLER		1
-49	602271-1	..SHAFT - ROLLER		1
-50	602267-1	..BUSHING		2
	NAS561P3-8	..PIN		2
-51	AN111-4	..BUSHING		2
-52	AN3-6A	..BOLT		2
	MS21042L3	..NUT		2
-53	602268-1	.CABLE ASSY - FORWARD		1
-54	602269-1	.LINK		1
-55	602268-2	.CABLE ASSY - REAR		1
-56	602262-1	.ADAPTER ASSY - FORWARD		1
-57	602263-1	.ADAPTER ASSY - REAR		2
	41-322-008-26	..CABLE		1
-58	602272-1	..CLIP		1
-59	AN3-5A	.BOLT		6
	MS21042L3	.NUT		6
-60	602270-1	.STOP - HALF		2
	602270-2	.STOP - HALF		2
	MS35206-213	.SCREW		8
		-000-		

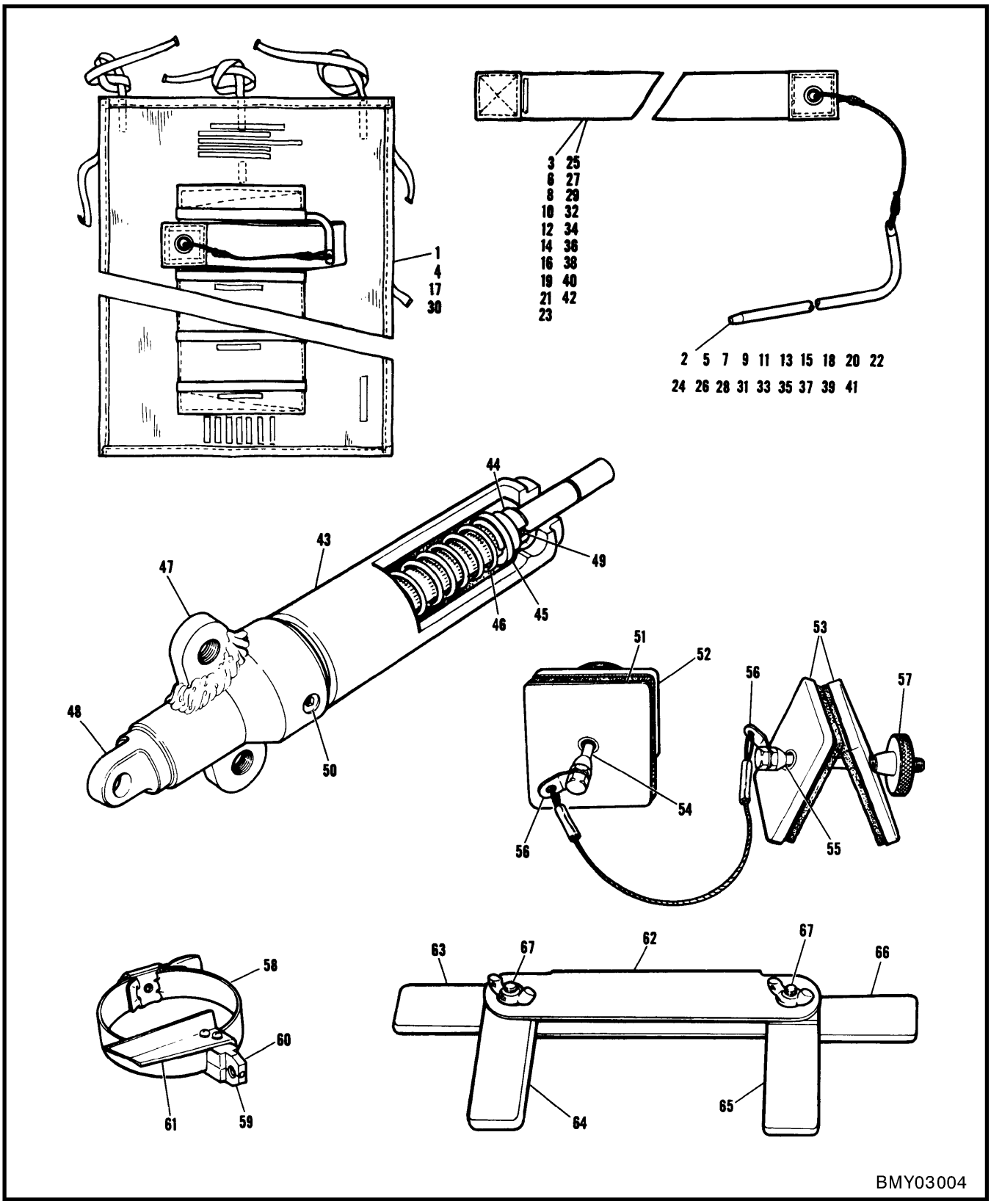

Figure 3-4 Rig Pins Initiator Dummy & Gauges

FIGURE AND INDEX NUMBER	GROUP SERVICE TOOLS MAJOR ASSEMBLY RIG PINS INITIATOR DUMMY & GAUGES PART NUMBER	1 2 3 4 5 6 7 NOMENCLATURE	EFFEC-TIVITY	UNITS PER ASSY
3-4 -	555852-1	KIT - FLAP RIG PINS (CANADAIR 41-323-021)		1
- 1	555872-1	.CASE - RIG PIN (CANADAIR 41-323-038-1)		1
	555830-14	.PIN ASSY - RIG		3
- 2	160557-7	..PIN - RIG		1
- 3	265159-14	..BUNTING ASSY		1
	555853-1	KIT - AILERON RIG PINS (CANADAIR 41-323-022)		1
- 4	555872-2	.CASE - RIG PIN (CANADAIR 41-323-038-2)		1
	555830-1	.PIN ASSY - RIG		2
- 5	160557-1	..PIN - RIG		1
- 6	265159-1	..BUNTING ASSY		1
	555830-2	.PIN ASSY - RIG		1
- 7	160557-1	..PIN - RIG		1
- 8	265159-2	..BUNTING ASSY		1
	555830-3	.PIN ASSY - RIG		1
- 9	160557-2	..PIN - RIG		1
-10	265159-3	..BUNTING ASSY		1
	555830-4	.PIN ASSY - RIG		1
-11	160557-3	..PIN - RIG		1
-12	265159-4	..BUNTING ASSY		1
	555830-5	.PIN ASSY - RIG		1
-13	160557-3	..PIN - RIG		1
-14	265159-5	..BUNTING ASSY		1
	555830-6	.PIN ASSY - RIG		2
-15	160557-2	..PIN - RIG		1
-16	265159-6	..BUNTING ASSY		1
	555854-1	KIT - ELEVATOR RIG PINS (CANADAIR 41-323-023)		1
-17	555872-3	.CASE - RIG PIN (CANADAIR 44-323-038-3)		1
	555830-3	.PIN ASSY - RIG		1
-18	160557-2	..PIN - RIG		1
-19	265159-3	..BUNTING ASSY		1
	555830-7	.PIN ASSY - RIG		1
-20	160557-7	..PIN - RIG		1
-21	265159-7	..BUNTING ASSY		1
	555830-8	.PIN ASSY - RIG		1
-22	160557-5	..PIN - RIG		1
-23	265159-8	..BUNTING ASSY		1
	555830-9	.PIN ASSY - RIG		1
-24	160557-7	..PIN - RIG		1
-25	265159-9	..BUNTING ASSY		1
	555830-10	.PIN ASSY - RIG		1
-26	160557-6	..PIN - RIG		1
-27	265159-10	..BUNTING ASSY		1
	555830-11	.PIN ASSY - RIG		1
-28	160557-7	..PIN - RIG		1
-29	265159-11	..BUNTING ASSY		1
	555855-1	KIT - RUDDER RIG PINS (CANADAIR 41-323-024)		1
-30	555872-4	.CASE - RIG PIN (CANADAIR 41-323-038-4)		1
	555830-3	.PIN ASSY - RIG		1
-31	160557-2	..PIN - RIG		1
-32	265159-3	..BUNTING ASSY		1
	555830-8	.PIN ASSY - RIG		1
-33	160557-5	..PIN - RIG		1
-34	265159-8	..BUNTING ASSY		1
	555830-10	.PIN ASSY - RIG		1
-35	160557-6	..PIN - RIG		1
-36	265159-10	..BUNTING ASSY		1
	555830-12	.PIN ASSY - RIG		2
-37	160557-8	..PIN - RIG		1

FIGURE AND INDEX NUMBER	GROUP SERVICE TOOLS MAJOR ASSEMBLY RIG PINS INITIATOR DUMMY & GAUGES PART NUMBER	1 2 3 4 5 6 7 NOMENCLATURE	EFFEC-TIVITY	UNITS PER ASSY
3-4 -38	265159-12	..BUNTING ASSY		1
	555830-13	.PIN ASSY - RIG		1
-39	160557-7	..PIN - RIG		1
-40	265159-13	..BUNTING		1
	555830-15	.PIN ASSY - RIG		1
-41	160557-3	..PIN - RIG		1
-42	265159-15	..BUNTING ASSY		1
	555870-1	INITIATOR - SEAT DUMMY M27 (CANADAIR 41-341-010)		1
-43	602288-1	.BODY - INITIATOR		1
-44	602291-1	.STOP - SPRING		1
-45	602290-1	.WASHER		1
-46	9-0810-21	.SPRING - (V15840)		1
-47	602287-1	.CAP ASSY - (WELD)		1
-48	602289-1	.PIN - GAUGE		1
-49	NAS561P3-7	.PIN		1
-50	AN565B6H2	.SETSCREW		1
	555871-1	KIT - CONTROL SURFACE BACKLASH (CANADAIR 41-332-032)		1
	555873-1	.CLAMP ASSY		1
-51	160566-1	..PAD ASSY - CLAMP		1
-52	160566-2	..PAD ASSY - CLAMP		1
-53	160566-3	..PAD ASSY		2
-54	160567-1	..BOLT		1
-55	160567-2	..BOLT		1
	160569-1	..NUT		2
-56	160570-1	..TAB WASHER		2
-57	160568-1	..NUT - KNURLED		2
	MS24665-130	..COTTER PIN		2
	41-332-032-17	..CABLE - (1/16 X 9 IN.)		2
	555874-1	.ADAPTER ASSY		1
-58	AN737TW74-91	..CLAMP		1
-59	160572-1	..ADAPTER - HALF		1
-60	160572-2	..ADAPTER - HALF		1
-61	160571-1	..BRACKET		1
	MS35333-36	..LOCK WASHER		1
	AN515-5R12	..SCREW		1
	555793-1	KIT - CANOPY CLEARANCE GAUGES (CANADAIR 41-332-010)		1
-62	360313-1	.FRAME		1
-63	360312-1	.GAUGE - CANOPY / SEAL NO-GO		1
-64	360312-2	.GAUGE - CANOPY / SEAL GO		1
-65	360312-3	.GAUGE - CANOPY / WINDSHIELD NO-GO		1
-66	360312-4	.GAUGE - CANOPY / WINDSHIELD GO		1
-67	AN3C10A	.BOLT		2
	MS35426-13	.NUT		2

-000-

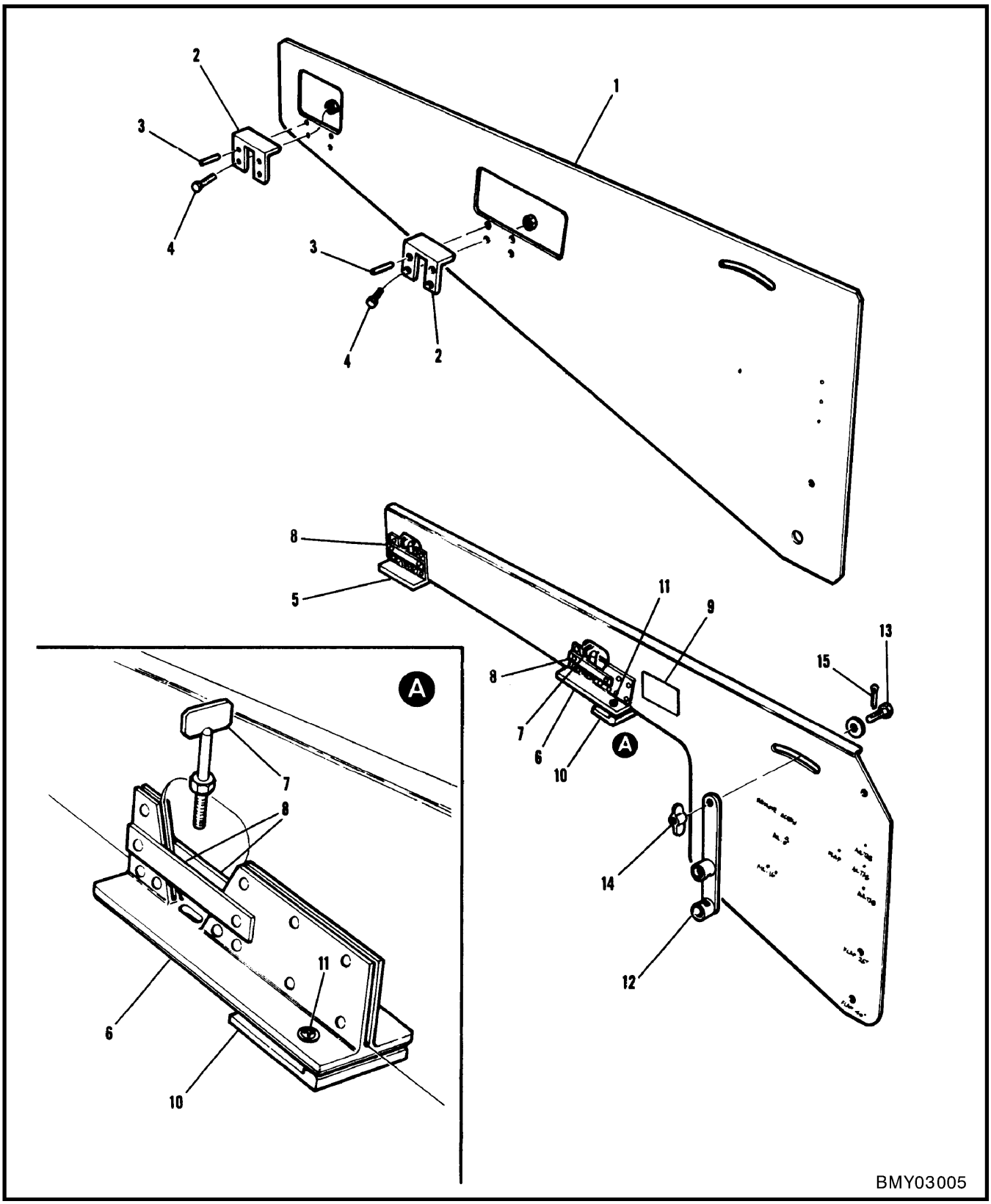

Figure 3-5 Flap, Aileron & Spring Tab Rig Nboards

FIGURE AND INDEX NUMBER	GROUP SERVICE TOOLS MAJOR ASSEMBLY FLAP, AILERON & SPRING TAB RIG NBOARDS PART NUMBER	1 2 3 4 5 6 7 NOMENCLATURE	EFFEC-TIVITY	UNITS PER ASSY
3-5 -	602283-1	RIG BOARD ASSY - FLAP, AIL. & SPRING TAB		1
	555866-1	.RIG BOARD ASSY - FLAP, AIL. & SPRING TAB		1
	602281-1	..GAUGE ASSY - FACILITY (CANADAIR 41-341-033)		1
- 1	602281-2	...PLATE - FACILITY GAUGE		1
	X21 (1/16 ID)	...BUSHING - (V17039)		1
	X21 (3/32 ID)	...BUSHING - (V17039)		1
	X21 (.0980 ID)	...BUSHING - (V17039)		1
	X22 (3/16 ID)	...BUSHING - (V17039)		1
- 2	602281-3	...ANGLE - FACILITY GAUGE		2
- 3	AN150279	...PIN		4
- 4	AN3-6	...BOLT		4
	AN960-3	...WASHER		4
	MS21042L3	...NUT		4
	41-341-034	...LAYOUT - GLASS CLOTH (DRAWING)		REF
	555867-1	..PLATE - RIG BOARD		1
- 5	160560-2	..PAD - FORWARD REST (CANADAIR 41-341-032-4)		1
- 6	160560-1	..PAD - REAR REST (CANADAIR 41-341-032-3)		1
- 7	160559-1	..SCREW ASSY - RIG BOARD RETAINING (CANADAIR 41-341-032-2)		2
- 8	160561-1	..STRIP - RETAINING		4
- 9	160564-1	.NAMEPLATE		1
-10	160573-1	.CLAMP - (CANADAIR 41-341-032-14)		1
-11	MS35206-266	.SCREW		2
	AN960-10	.WASHER		2
-12	160574-1	.LOCATOR ASSY - (CANADAIR 41-341-032-17)		1
-13	160575-1	.BOLT ASSY - RETAINER (CANADAIR 41-341-032-18)		1
-14	MS35426-15	.NUT		1
-15	NAS561P3-5	.PIN		1

-000-

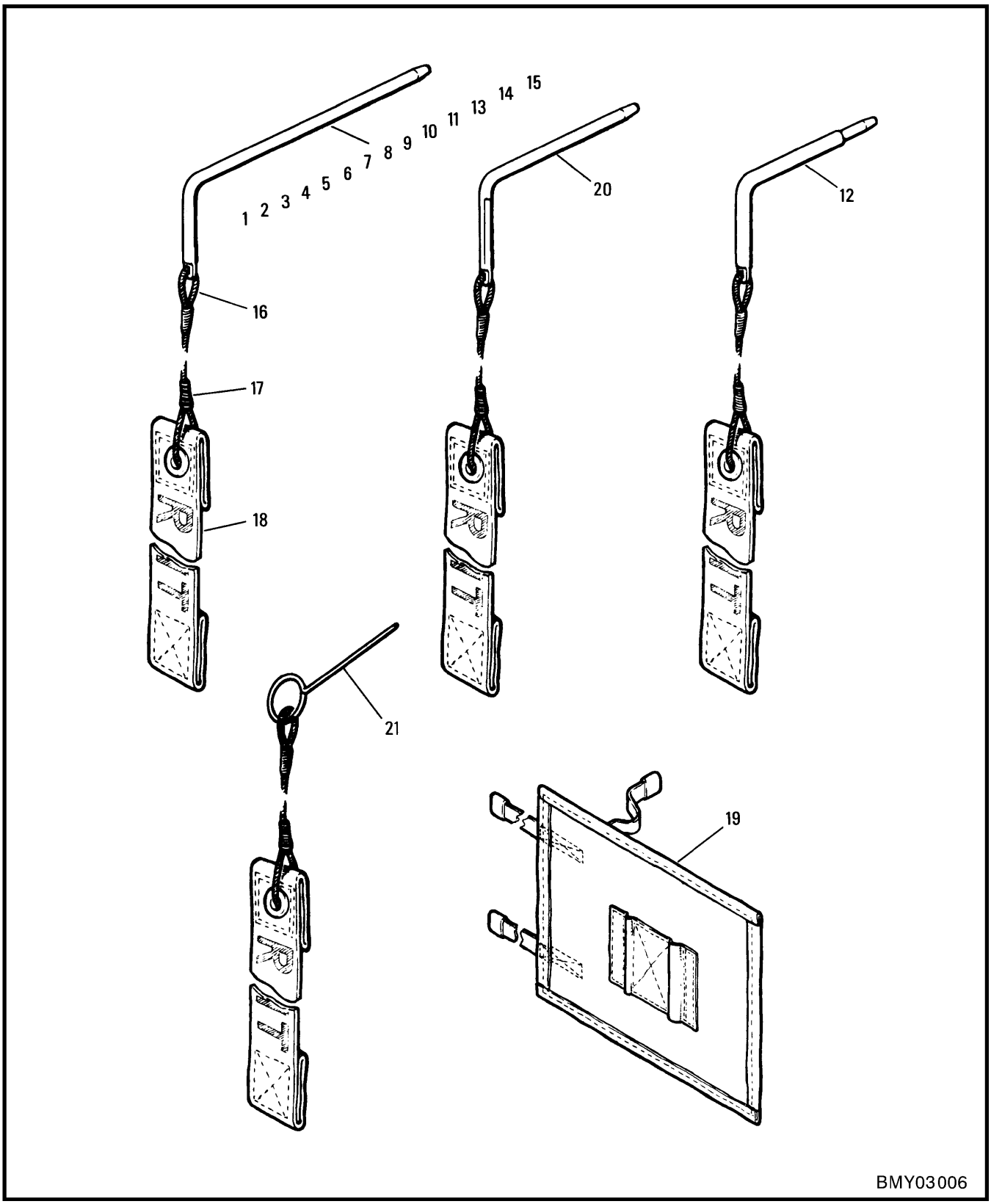

Figure 3-6 Rigging Pins

FIGURE AND INDEX NUMBER	GROUP SERVICE TOOLS MAJOR ASSEMBLY RIGGING PINS PART NUMBER	1 2 3 4 5 6 7 NOMENCLATURE	EFFEC-TIVITY	UNITS PER ASSY
3-6 -	41-323-002-1	KIT - COMPLETE AIRCRAFT RIG PIN (V88308)		1
- 1	555830-1	.PIN ASSY - FUSELAGE STA 181 AILERON RIG (CANADAIR 41-323-002-6)		2
	160557-1	..PIN - RIG		1
	41-323-002-51	..CABLE		1
	41-323-002-52	..WIRE		2
	265159-1	..BUNTING ASSY - RIG PIN		1
- 2	555830-2	.PIN ASSY - FUSELAGE STA 190 AILERON RIG (CANADAIR 41-323-002-7)		1
	160557-1	..PIN - RIG		1
	41-323-002-51	..CABLE		1
	41-323-002-52	..WIRE		2
	265159-2	..BUNTING ASSY - RIG PIN		1
- 3	555830-3	.PIN ASSY - FUSELAGE STA 207 AILERON, ELEVATOR & RUDDER RIG (CANADAIR 41-323-002-8)		1
	160557-2	..PIN - RIG		1
	41-323-002-51	..CABLE		1
	41-323-002-52	..WIRE		2
	265159-3	..BUNTING ASSY - RIG PIN		1
- 4	555830-4	.PIN ASSY - FUSELAGE STA 262 AILERON RIG (CANADAIR 41-323-002-9)		1
	160557-3	..PIN - RIG		1
	41-323-002-51	..CABLE		1
	41-323-002-52	..WIRE		2
	265159-4	..BUNTING ASSY - RIG PIN		1
- 5	555830-5	.PIN ASSY - FUSELAGE STA 286 AILERON RIG (CANADAIR 41-323-002-10)		1
	160557-3	..PIN - RIG		1
	41-323-002-51	..CABLE		1
	41-323-002-52	..WIRE		2
	265159-5	..BUNTING ASSY - RIG PIN		1
- 6	555830-6	.PIN ASSY - WING STA 129 AILERON RIG (CANADAIR 41-323-002-11)		2
	160557-2	..PIN - RIG		1
	41-323-002-51	..CABLE		1
	41-323-002-52	..WIRE		2
	265159-6	..BUNTING ASSY - RIG PIN		1
- 7	555830-7	.PIN ASSY - FUSELAGE STA 180 ELEVATOR RIG (CANADAIR 41-323-002-12)		1
	160557-4	..PIN - RIG		1
	41-323-002-51	..CABLE		1
	41-323-002-52	..WIRE		2
	265159-7	..BUNTING ASSY - RIG PIN		1
- 8	555830-8	.PIN ASSY - FUSELAGE STA 231 ELEVATOR & RUDDER RIG (CANADA IR 41-323-002-13)		1
	160557-5	..PIN - RIG		1
	41-323-002-51	..CABLE		1
	41-323-002-52	..WIRE		2
	265159-8	..BUNTING ASSY - RIG PIN		1
- 9	555830-9	.PIN ASSY - FUSELAGE STA 262 ELEVATOR RIG (CANADAIR 41-323-002-14)		1
	160557-4	..PIN - RIG		1
	41-323-002-51	..CABLE		1
	41-323-002-52	..WIRE		2
	265159-9	..BUNTING ASSY - RIG PIN		1
-10	555830-10	.PIN ASSY - FUSELAGE STA 3 87 ELEVATOR & RUDDER RIG (CANADAIR 41-323-002-15)		1
	160557-6	..PIN - RIG		1
	41-323-002-51	..CABLE		1
	41-323-002-52	..WIRE		2
	265159-10	..BUNTING ASSY - RIG PIN		1

FIGURE AND INDEX NUMBER	GROUP SERVICE TOOLS MAJOR ASSEMBLY RIGGING PINS PART NUMBER	1 2 3 4 5 6 7 NOMENCLATURE	EFFEC-TIVITY	UNITS PER ASSY
3-6 -11	555830-11	.PIN ASSY - FUSELAGE STA 406 ELEVATOR RIG (CANADAIR 41-323-002-16)		1
	160557-7	..PIN - RIG		1
	41-323-002-51	..CABLE		1
	41-323-002-52	..WIRE		2
	265159-11	..BUNTING ASSY - RIG PIN		1
-12	555830-12	.PIN ASSY - FUSELAGE STA 154 RUDDER RIG (CANADAIR 41-323-002-17)		2
	160557-8	..PIN - RIG		1
	41-323-002-51	..CABLE		1
	41-323-002-52	..WIRE		2
	265159-12	..BUNTING ASSY - RIG PIN		1
-13	555830-13	.PIN ASSY - FUSELAGE STA 262 RUDDER RIG (CANADAIR 41-323-002-18)		1
	160557-4	..PIN - RIG		1
	41-323-002-51	..CABLE		1
	41-323-002-52	..WIRE		2
	265159-13	..BUNTING ASSY - RIG PIN		1
-14	555830-14	.PIN ASSY - FUSELAGE STA 282 FLAP RIG (CANADAIR 41-323-002-19)		1
	160557-7	..PIN - RIG		1
	41-323-002-51	..CABLE		1
	41-323-002-52	..WIRE		2
	265159-14	..BUNTING ASSY - RIG PIN		1
	555830-15	.PIN ASSY - FUSELAGE STA 154 RUDDER RIG (CANADAIR 41-323-002-46)		1
-15	160557-3	..PIN - RIG		1
-16	41-323-002-51	..CABLE		1
-17	41-323-002-52	..WIRE		2
-18	265159-15	..BUNTING ASSY - RIG PIN		1
	555856-1	KIT - ENGINE CONTROL RIG PINS (CANADAIR 41-323-025)		1
-19	602284-1	.CASE ASSY - RIG PINS		1
-20	456672-1	.PIN ASSY - POWER CONTROL AIRFRAME RIG (CANADAIR 41-323-003)		1
	265210-1	..PIN - RIG		1
	41-323-003-11	..CABLE		1
	265211-1	..BUNTING ASSY - RIG PIN		1
-21	456676-1	.PIN ASSY - POWER CONTROL ENGINE RIG (CANADAIR 41-323-015)		1
	265212-1	..PIN - RIG		1
	41-323-015-13	..CABLE		1
	265213-1	..BUNTING ASSY - RIG PIN		1

-000-

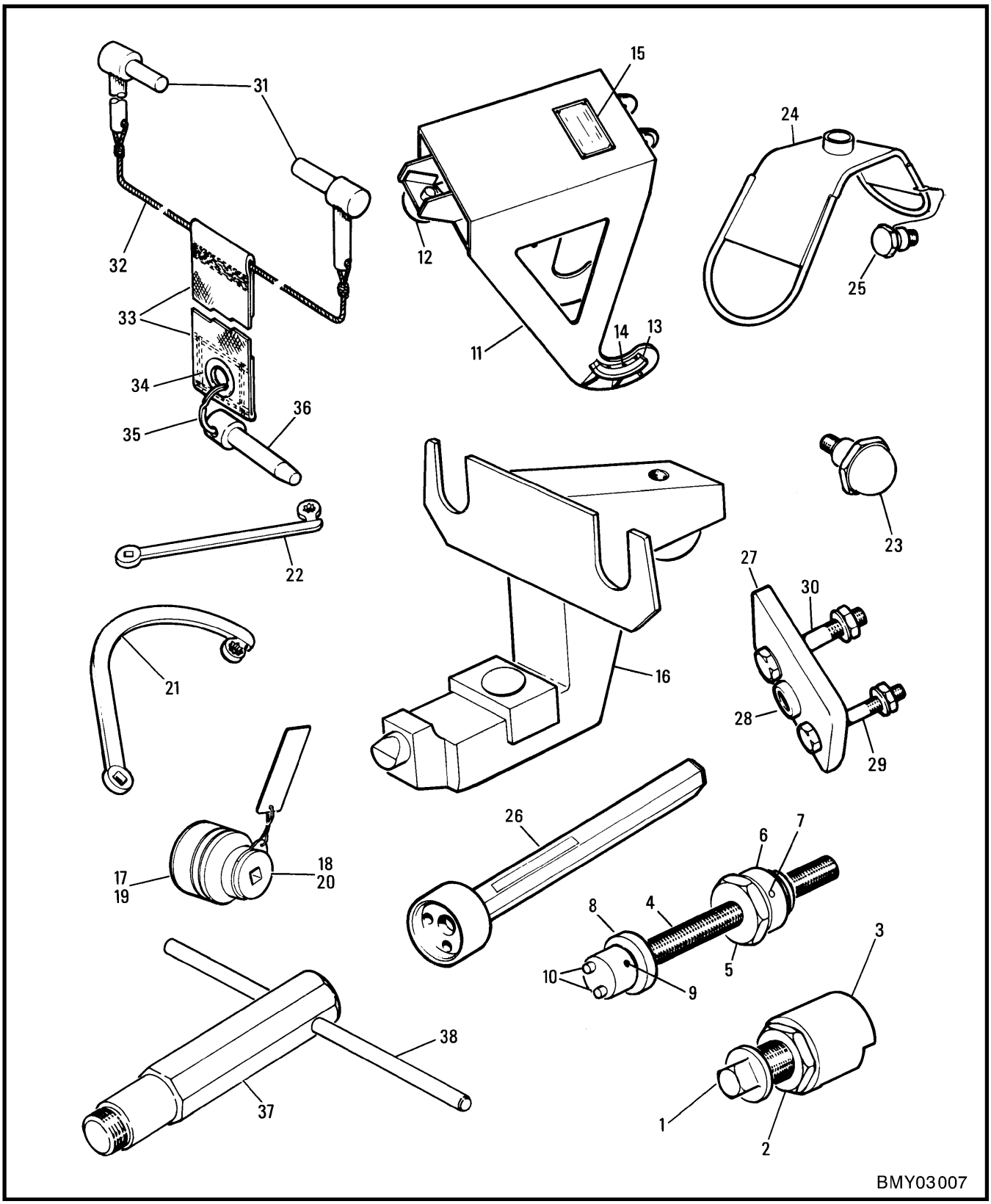

Figure 3-7 Special Tools & Adaptors

FIGURE AND INDEX NUMBER	GROUP SERVICE TOOLS MAJOR ASSEMBLY SPECIAL TOOLS & ADAPTORS PART NUMBER	1 2 3 4 5 6 7 NOMENCLATURE	EFFEC-TIVITY	UNITS PER ASSY
3-7 -	41-332-012	GUARD - WING TO FUSELAGE ATT BOLT INSERTING		1
	555792-1	KIT - MAIN LANDING GEAR PIVOT PIN FORWARD & REAR BEARING REMOVER & REPLACER (CANADAIR 41-332-008)		1
	360310-1	.REMOVER ASSY - PIVOT PIN		1
- 1	265203-1	..SHAFT - SCREW		1
- 2	265202-1	..NUT		1
- 3	265201-1	..HOUSING		1
	360311-1	.REPLACER ASSY - PIVOT PIN		1
- 4	265207-1	..SHAFT		1
- 5	265205-1	..NUT		1
- 6	265206-1	..COLLAR		1
- 7	AN150254	..PIN		2
- 8	265204-1	..ADAPTER		1
- 9	NAS561P4-13	..PIN		1
-10	AN150280	..PIN		2
	555797-1	ADAPTER ASSY - NOSE LDG/GR WHEEL CHANGING (CANADAIR 41-322-011)		1
-11	555798-1	.ADAPTER ASSY - NOSE WHEEL CHANGING		1
-12	555800-1	.PAD - JACK		1
-13	160581-1	.PLATE		2
-14	AN515-6R8	.SCREW		6
-15	555801-1	.NAMEPLATE		1
-16	C63F51613-1	ADAPTER ASSY - MAIN LANDING GEAR JACKING (CANADAIR 41-322-002)		1
	555803-1	WRENCH ASSY - NOSE LANDING GEAR AXLE NUT (CANADAIR 41-332-004)		1
-17	LDH482	.SOCKET - (V09698)		1
	160555-1	.RING		1
-18	160556-1	.ADAPTER		1
	160554-2	.TAG - IDENTIFICATION		1
	41-332-004-6	.CABLE - TAG		1
	555802-1	WRENCH ASSY - MAIN LANDING GEAR AXLE NUT (CANADAIR 41-332-003)		1
-19	LDH682	.SOCKET - (V09698)		1
	160555-1	.RING		1
-20	160556-1	.ADAPTER		1
	160554-1	.TAG - IDENTIFICATION		1
	41-332-003-6	.CABLE - TAG		1
	555846-1	KIT - GENERATOR WRENCHES (CANADAIR 41-332-001)		1
-21	360314-1	.WRENCH - HALF MOON		1
-22	360315-1	.WRENCH - SPECIAL		1
	555857-2	WRENCH - TACHOMETER (CANADAIR 41-332-011)		1
-23	360356-1	ADAPTER - FORWARD & REAR FUSELAGE & WING JACK FITTING (CANADAIR 41-322-010)		1
	360291-1	ADAPTER ASSY - EQUIPMENT PICKETING (CANADAIR 41-323-014)		1
-24	360292-1	.ADAPTER ASSY - PICKETING		1
-25	360293-1	.BOLT - ADAPTER		1
	41-323-014-7	.CABLE - BOLT		1
-26	555868-1	TOOL - NOSE LANDING GEAR SHOCK ABSORBER (CANADAIR 41-332-005)		1
	555751-1	JIG ASSY - TAIL PIPE TAPER PIN SEAL DRILL (CANADAIR 41-333-017)		1
	602306-1	.PLATE ASSY - DRILL JIG		1
-27	41-333-017-3	..PLATE - DRILL JIG		1
-28	X611A	..BUSHING - (V17039)		1
-29	AN3-10A	..BOLT		1

FIGURE AND INDEX NUMBER	GROUP SERVICE TOOLS MAJOR ASSEMBLY SPECIAL TOOLS & ADAPTORS PART NUMBER	1 2 3 4 5 6 7 NOMENCLATURE	EFFEC-TIVITY	UNITS PER ASSY
3-7 -30	AN3-11A	..BOLT		1
	MS35333-19	.LOCK WASHER		1
	MS35333-40	.LOCK WASHER		1
	MS35650-302	.NUT		1
	MS35650-3252	.NUT		1
	C66D00743	GAUGE ASSY - CANOPY HINGE CLEARANCE		1
-31	C65D00217-1	.GAUGE - CANOPY HINGE CLEARANCE (IAW C-12-114-000/CS-15)		2
-32	C66D00743-13	.CABLE - WIRE (1/16 DIA X 52 IN. LONG)		1
-33	C66D00743-12	.BUNTING - (14 IN. LONG)		1
-34	MS20230B4	.GROMMET - (5325-00-231-6591)		1
-35	8432-1-1/4	.RING - (PAS)		1
-36	C66D00743-11	.PIN - (1/2 IN. DRILL ROD STOCK DRILL NO. 10 (.193 IN.))		1
	C67B00217	TOOL - M/LDG/GR FLUID FILLER NUT REMOVING		1
-37	C67B00215	.BODY - TOOL		1
-38	C67B00216	.HANDLE		1
		-000-		

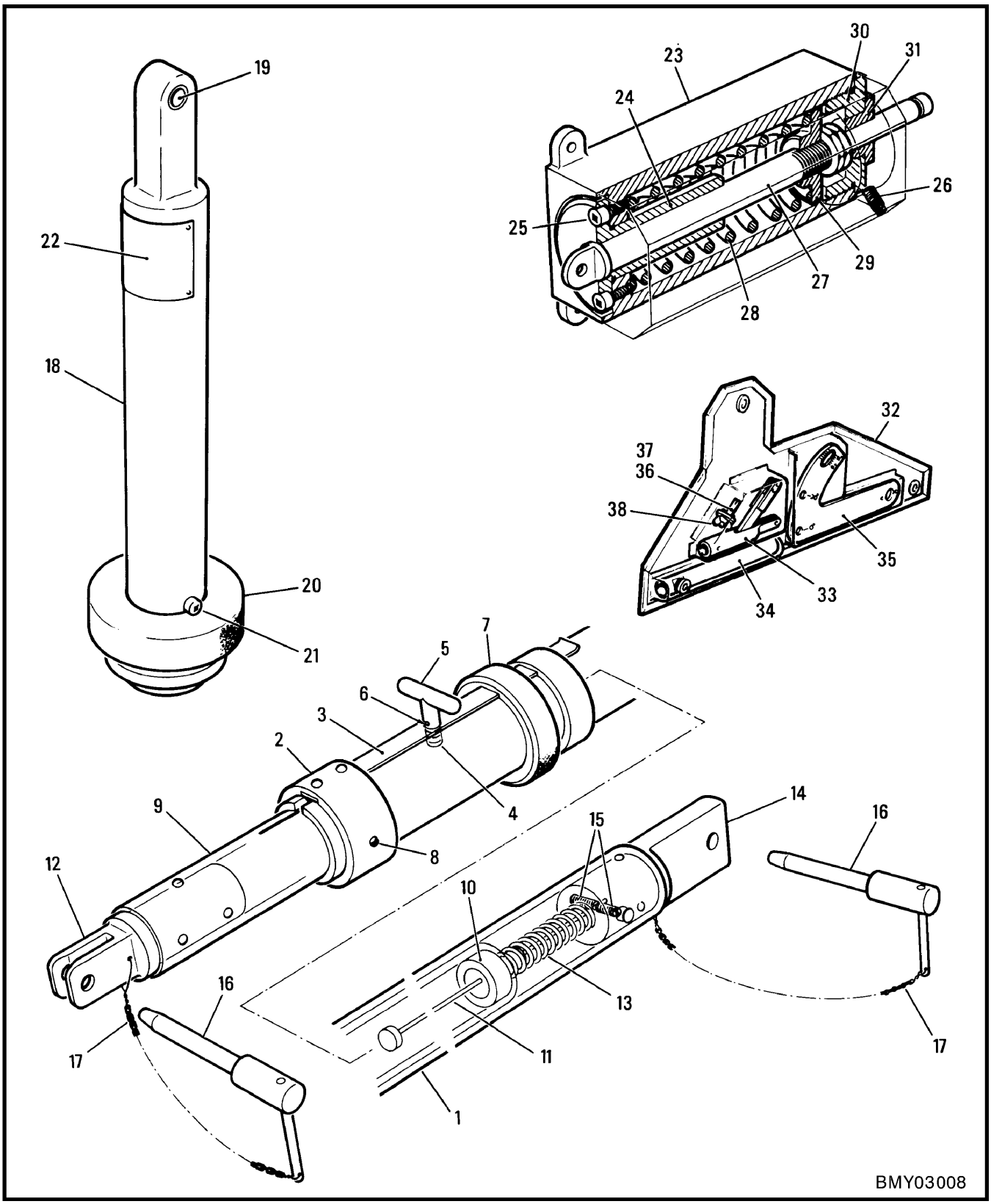

Figure 3-8 Canopy Strut, Dummy Catapult & Initiator

FIGURE AND INDEX NUMBER	GROUP SERVICE TOOLS MAJOR ASSEMBLY CANOPY STRUT, DUMMY CATAPULT & INITIATOR PART NUMBER	1 2 3 4 5 6 7 NOMENCLATURE	EFFEC-TIVITY	UNITS PER ASSY
3-8 -	C63F51604-1	STRUT ASSY - CANOPY (CANADAIR 41-333-001)		1
- 1	C63D51606-1	.TUBE ASSY - STRUT OUTER		1
	C63C51607-1	.LOCK ASSY - SPRING		1
- 2	41-333-001-20	..RING		1
- 3	41-333-001-21	..SPRING - FLAT		1
- 4	C63B51611-1	..PIN - SPRING LOCK		1
- 5	C63B51608-1	..PIN ASSY - SPRING LOCK		1
- 6	NAS561P2-6	..PIN		1
- 7	C63B51612-1	..RING - LOCK SLIDING		1
- 8	MS35207-259	.SCREW		3
	C63D51605-1	.TUBE ASSY - STRUT INNER		1
- 9	41-333-001-8	..TUBE - STRUT		1
-10	41-333-001-12	..END FITTING - TUBE		1
-11	C63B51609-1	..ROD ASSY		1
-12	41-333-001-10	..FITTING - INNER TUBE FORK		1
-13	9-1010-11	.SPRING - (V99333)		1
-14	41-333-001-11	.FITTING - OUTER TUBE END		1
-15	AN565D1032H9	.SETSCREW		2
-16	C63C51610-1	.PIN ASSY		2
-17	41-333-001-32	.CHAIN		2
	555818-1	CATAPULT ASSY - CANOPY DUMMY (CANADAIR 41-341-005)		1
-18	555816-1	.CATAPULT ASSY - CANOPY DUMMY		1
-19	AB648	.BUSHING - (RMB)		1
-20	555815-1	.NUT - KNURLED		1
-21	41-341-005-6	.SCREW		1
-22	555817-1	.NAMEPLATE		1
	AN530-2R4	.SCREW		4
	555822-1	INITIATOR ASSY - DUMMY (REPLACING M3A1 & M32) (CANADAIR 41-341-004)		1
-23	555823-1	.HOUSING ASSY - INITIATOR		1
-24	555824-1	.GUIDE - SHAFT		1
-25	41-341-004-12	.SCREW		2
-26	41-341-004-13	.SCREW		1
-27	555825-1	.SHAFT - INITIATOR		1
-28	555829-1	.SPRING - COMPRESSION		1
-29	555826-1	.RETAINER - SPRING		1
	AN316-6R	.NUT		2
-30	555828-1	.CAP - HOUSING		1
-31	555827-1	.BUSHING		1
	555875-1	KIT - CANOPY & SEAT LEG GUARD RIGGING EQUIPMENT (CANADAIR 41-341-036)		1
-32	602302-1	.CASE ASSY - (CANOPY & SEAT RIGGING KIT)		1
	602295-1	.BAR ASSY - CANOPY OPERATING BELLCRANK ASSISTER (CANADAIR 41-341-037)		1
-33	602296-1	..BAR ASSY - (CANOPY BELL CRANK)		1
-34	602297-1	..TUBE - (CANOPY BELLCRANK)		1
	602298-1	.FIXTURE ASSY - SEAT LEG GUARD RIGGING (CANADAIR 41-341-038)		1
-35	602300-1	..INDICATOR - SEAT LEG GUARD RIGGING		1
-36	602299-1	..FIXTURE - SEAT LEG GUARD RIGGING		1
-37	602301-1	..SCREW		1
-38	MS35426-14	..NUT		1

-000-

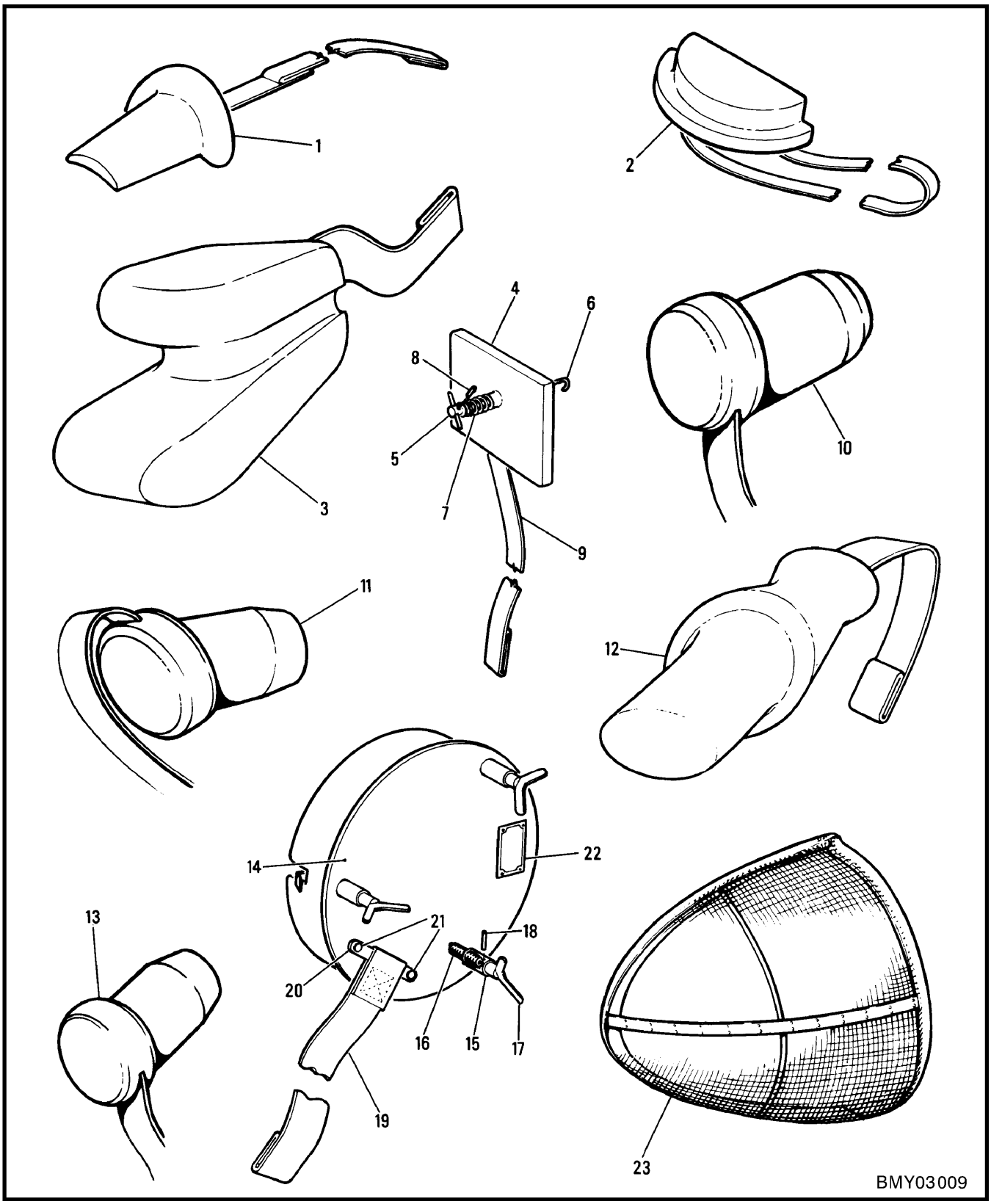

Figure 3-9 Blanking Plugs

FIGURE AND INDEX NUMBER	GROUP SERVICE TOOLS MAJOR ASSEMBLY BLANKING PLUGS PART NUMBER	1 2 3 4 5 6 7 NOMENCLATURE	EFFEC-TIVITY	UNITS PER ASSY
3-9 - 1	41-323-007-1	PLUG ASSY - RAM AIR INLET BLANKING		2
- 2	41-323-005-1A	PLUG ASSY - INTAKE DUCT BLANKING		2
- 3	41-323-018-1	PLUG ASSY - COOLING FLUSH SCOOP BLANKING		1
	41-323-017-1	PLUG ASSY - HEAT EXCHANGER WING ROOT STBD BLANKING		1
- 4	41-323-017-2	.PLUG		1
- 5	359770-1	.HANDLE ASSY		1
- 6	41-323-017-5	.HOOK ASSY		1
- 7	C720-072-2000	.SPRING		1
- 8	NAS561P3-9	.PIN		1
- 9	41-323-036-1	.STREAMER - WARNING		1
-10	41-323-016-1	PLUG ASSY - HEAT EXCHANGER OUTLET BLANKING		1
-11	41-323-010-1	PLUG ASSY - EXIT DUCT STA297 RH BLANKING		1
-12	41-323-009-1	PLUG ASSY - COMPRESSOR BLEED OUTLET BLKG		2
-13	41-323-008-1	PLUG ASSY - GENERATOR COOLING INLET BLKG		1
	360284-1	PLUG ASSY - TAIL PIPE BLANKING (CANADAIR 41-323-006-1)		1
-14	360283-1	.PLUG ASSY - WELDED		1
	41-323-017-5	.HOOK ASSY		1
	C720-072-2000	.SPRING		1
	NAS561P3-9	.PIN		1
-15	360282-1	.PIN ASSY - LOCKING		3
-16	9-0810-11	.SPRING - (V15840)		3
-17	360281-1	.HANDLE ASSY - LOCKING		3
-18	NAS561P3-8	.PIN		3
-19	360280-1	.STREAMER ASSY - (MADE FROM 41-323-036-6)		1
-20	360279-1	.STRIP		1
-21	MS35206-229	.SCREW		2
	AN960-3	.WASHER		2
	MS21042L06	.NUT		2
-22	360278-1	.NAMEPLATE - (MADE FROM RCAF 22368)		1
-23	8925056-1	SCREEN ASSY - AIR INTAKE LH & RH (37473)		2
	C64F46819-2	SCREEN ASSY - AIR INTAKE RH		1

-000-

PART 4

BULK MATERIAL CHART

TABLE OF CONTENTS

Title	Page
Drain System	4-3
Electrical System	4-4
Electronic System	4-9
Fuel System	4-10
Heat & Vent & Pressurization System	4-11
Hydraulic System	4-13
Oxygen System	4-19
Pitot Static System	4-20
Tape	4-21
Trim (Interior)	4-22
Miscellaneous	4-24
Emergency Hydraulic System (Snowbird)	4-25
Smoke System (Snowbird)	4-26

Current Specification	Obsolete Specification	Commercial Designations			Additional Data
		American		Canadian	
		Old	New		
ASTM B88	WW-T-799	COPPER			SEAMLESS
C20-51 (RCAF)		COPPER			HIGH PRESSURE
MIL-T-5695	57-180-3, GR LS, AN-WW-T-855, 44-T-27	18-8 TYPE 304 - HARDENED			TYPE 1 - SEAMLESS TYPE 2 - WELDED
MIL-T-8504	AN-T-43 COMP 1 MIL-T-6846, SAE303044	18-8 TYPE 304 - ANNEALED			
SAE-AMS-5576	57-180-4, AN-WW-T-861, 44-T-26, AN-T-82, MIL-T-6737	18-8 TYPE 321 STABILIZED			WELDED
SAE-AMS-5575		18-8 TYPE 347 - STABILIZED			
SAE-AMS-T-6485	AN-T-86, AMS 5566, MIL-T-6845	18-8 TYPE 304 - COLD DRAWN			HYDRAULIC
SAE-AMS-T-7081	AMS 4083, MIL-T-7081	61S	6061	65S-T6	SEAMLESS - HYDRAULIC
SAE-AMS-T-8506	57-180-3, GR LS, AN-WW-T-855, 44-T-27, MIL-T-8506	18-8 TYPE 304 - ANNEALED			TYPE 1 - SEAMLESS TYPE 2 - WELDED
SAE-AMS-WW-T-700/1	44-T-19, 57-186-1, WW-T-783	2S	1100	2S	SEAMLESS - DRAWN
SAE-AMS-WW-T-700/3	44-T-28, 10235, MIL-T-5063, AMS 4086, AN-T-80, TYPES 1 TO 5, WW-T-786, WW-T-785	24S-T3	2024	24S-T3	SEAMLESS - DRAWN
SAE-AMS-WW-T-700/4	57-186-3, 44-T-32, AMS 4071, WW-T-787	52S	5052	57S-O 57S-1/2H	SEAMLESS - DRAWN
SAE-AMS-WW-T-700/2	44-T-20, WW-T-788	3S	3003	3S	
SAE-AMS-WW-T-700/6	WW-T-789	61S	6061	65S-O	SEAMLESS - DRAWN
OBSOLETE MATERIAL	WW-T-790, 11327, 44-T-30	53S	6053	55S	SEAMLESS
		1S-1/2H			
		17S-T (WHEN STOCK DEPLETED USE 24S)			

Chart 3 Specifications – Commercial: Designation of Tubing

Part Number	Size, Gauge, Straight Length	Material Spec	Fittings			
			Sleeve	Qty	Nut	Qty
DRAIN SYSTEM						
41A-44001-26	5/16 ID X 2	MIL-H-6000				
41A-44002-12	1/4 X .035 X	WW-T-789 65S-T6	MS20819-4	1	AN818-4D	1
41A-44002-14	3/8 X .035 X	WW-T-789 65S-T6	MS20819-6	1	AN818-6D	1
41A-44002-16	.032 X 3-3/4 X 9-1/2	QQ-A-362 HT T42	Alum Alloy			
41A-44003-12	1/8 X .020 X 20	WW-T-787 57S-O	MS20819-2	1	AN818-2D	1
41A-44003-6	5/16 X .035 X 22	WW-T-787 57S-O 30B/963				
41A-44003-8	5/16 X .035 X 22	WW-T-787 757S-O 30B/963				

Part Number	Size, Gauge, Straight Length	Material Spec	Fittings			
			Sleeve	Qty	Nut	Qty
ELECTRICAL SYSTEM						
S1244B	AS REQUIRED	MIL-I-7444 TYPE II	FLEXIBLE TUBE		PLASTIC	
S1244B10-44	3/8 ID X 44	MIL-I-7444 TYPE II	FLEXIBLE TUBE		PLASTIC	
S1244B11-176	.330 ID X 176	MIL-I-7444 TYPE II	FLEXIBLE TUBE		PLASTIC	
S1244B11-18	.330 ID X 18	MIL-I-7444 TYPE II	FLEXIBLE TUBE		PLASTIC	
S1244B11-30	.330 ID X 30	MIL-I-7444 TYPE II	FLEXIBLE TUBE		PLASTIC	
S1244B11-34	.330 ID X 34	MIL-I-7444 TYPE II	FLEXIBLE TUBE		PLASTIC	
S1244B11-41	.330 ID X 41	MIL-I-7444 TYPE II	FLEXIBLE TUBE		PLASTIC	
S1244B12-14	.294 ID X 14	MIL-I-7444 TYPE II	FLEXIBLE TUBE		PLASTIC	
S1244B12-15	.294 ID X 15	MIL-I-7444 TYPE II	FLEXIBLE TUBE		PLASTIC	
S1244B12-16	.294 ID X 16	MIL-I-7444 TYPE II	FLEXIBLE TUBE		PLASTIC	
S1244B12-40	.294 ID X 40	MIL-I-7444 TYPE II	FLEXIBLE TUBE		PLASTIC	
S1244B12-42	.294 ID X 42	MIL-I-7444 TYPE II	FLEXIBLE TUBE		PLASTIC	
S1244B12-55	.294 ID X 55	MIL-I-7444 TYPE II	FLEXIBLE TUBE		PLASTIC	
S1244B13-1-1/2	.263 ID X 1-1/2	MIL-I-7444 TYPE II	FLEXIBLE TUBE		PLASTIC	
S1244B13-10	.263 ID X 10	MIL-I-7444 TYPE II	FLEXIBLE TUBE		PLASTIC	
S1244B13-11	.263 ID X 11	MIL-I-7444 TYPE II	FLEXIBLE TUBE		PLASTIC	
S1244B13-12	.263 ID X 12	MIL-I-7444 TYPE II	FLEXIBLE TUBE		PLASTIC	
S1244B13-14	.263 ID X 14	MIL-I-7444 TYPE II	FLEXIBLE TUBE		PLASTIC	
S1244B14-22	.234 ID X 22	MIL-I-7444 TYPE II	FLEXIBLE TUBE		PLASTIC	
S1244B14-3	.234 ID X 3	MIL-I-7444 TYPE II	FLEXIBLE TUBE		PLASTIC	
S1244B14-79	.234 ID X 79	MIL-I-7444 TYPE II	FLEXIBLE TUBE		PLASTIC	
S1244B15-17	.208 ID X 17	MIL-I-7444 TYPE II	FLEXIBLE TUBE		PLASTIC	
S1244B15-6	.208 ID X 6	MIL-I-7444 TYPE II	FLEXIBLE TUBE		PLASTIC	

Part Number	Size, Gauge, Straight Length	Material Spec	Fittings			
			Sleeve	Qty	Nut	Qty
ELECTRICAL SYSTEM (CONTINUED)						
S1244B16-1-1/2	.186 ID X 1-1/2	MIL-I-7444 TYPE II	FLEXIBLE TUBE		PLASTIC	
S1244B16-10	.186 ID X 10	MIL-I-7444 TYPE II	FLEXIBLE TUBE		PLASTIC	
S1244B16-13	.186 ID X 13	MIL-I-7444 TYPE II	FLEXIBLE TUBE		PLASTIC	
S1244B16-24	.186 ID X 24	MIL-I-7444 TYPE II	FLEXIBLE TUBE		PLASTIC	
S1244B16-29	.186 ID X 29	MIL-I-7444 TYPE II	FLEXIBLE TUBE		PLASTIC	
S1244B16-38	.186 ID X 38	MIL-I-7444 TYPE II	FLEXIBLE TUBE		PLASTIC	
S1244B16-7	.186 ID X 7	MIL-I-7444 TYPE II	FLEXIBLE TUBE		PLASTIC	
S1244B16-8	.186 ID X 8	MIL-I-7444 TYPE II	FLEXIBLE TUBE		PLASTIC	
S1244B18-4	.148 ID X 4	MIL-I-7444 TYPE II	FLEXIBLE TUBE		PLASTIC	
S1244B18-59-1/2	.148 ID X 59-1/2	MIL-I-7444 TYPE II	FLEXIBLE TUBE		PLASTIC	
S1244B19-30	.133 ID X 30	MIL-I-7444 TYPE II	FLEXIBLE TUBE		PLASTIC	
S1244B20-9-1/2	.118 ID X 9-1/2	MIL-I-7444 TYPE II	FLEXIBLE TUBE		PLASTIC	
S1244B27-1	.053 ID X 1	MIL-I-7444 TYPE II	FLEXIBLE TUBE		PLASTIC	
S1244B30-1	.034 ID X 1	MIL-I-7444 TYPE II	FLEXIBLE TUBE		PLASTIC	
S1244B30-1-1/2	.034 ID X 1-1/2	MIL-I-7444 TYPE II	FLEXIBLE TUBE		PLASTIC	
S1244B4-12-1/2	1 ID X 12-1/2	MIL-I-7444 TYPE II	FLEXIBLE TUBE		PLASTIC	
S1244B6-10	3/4 ID X 10	MIL-I-7444 TYPE II	FLEXIBLE TUBE		PLASTIC	
S1244B6-11	3/4 ID X 11	MIL-I-7444 TYPE II	FLEXIBLE TUBE		PLASTIC	
S1244B7-10	5/8 ID X 10	MIL-I-7444 TYPE II	FLEXIBLE TUBE		PLASTIC	
S1244B7-11	5/8 ID X 11	MIL-I-7444 TYPE II	FLEXIBLE TUBE		PLASTIC	
S1244B7-12	5/8 ID X 12	MIL-I-7444 TYPE II	FLEXIBLE TUBE		PLASTIC	
S1244B7-15	5/8 ID X 15	MIL-I-7444 TYPE II	FLEXIBLE TUBE		PLASTIC	
S1244B7-20	5/8 ID X 20	MIL-I-7444 TYPE II	FLEXIBLE TUBE		PLASTIC	

Part Number	Size, Gauge, Straight Length	Material Spec	Fittings			
			Sleeve	Qty	Nut	Qty
ELECTRICAL SYSTEM (CONTINUED)						
S1244B7-21	5/8 ID X 21	MIL-I-7444 TYPE II	FLEXIBLE TUBE		PLASTIC	
S1244B7-24	5/8 ID X 24	MIL-I-7444 TYPE II	FLEXIBLE TUBE		PLASTIC	
S1244B7-29	5/8 ID X 29	MIL-I-7444 TYPE II	FLEXIBLE TUBE		PLASTIC	
S1244B7-83	5/8 ID X 83	MIL-I-7444 TYPE II	FLEXIBLE TUBE		PLASTIC	
S1244B8-21	1/2 ID X 21	MIL-I-7444 TYPE II	FLEXIBLE TUBE		PLASTIC	
S1244B8-48	1/2 ID X 48	MIL-I-7444 TYPE II	FLEXIBLE TUBE		PLASTIC	
S1244B9-5-1/4	.438 ID X 5-1/4	MIL-I-7444 TYPE II	FLEXIBLE TUBE		PLASTIC	
S1244D	AS REQUIRED	MIL-I-3190 CLASS A-B-2	COTTON		SLEEVE	
S1244D12-3	.294 ID X 3	MIL-I-3190 CLASS A-B-2	COTTON		SLEEVE	
S1244D8-3	1/2 ID X 3	MIL-I-3190 CLASS A-B-2	COTTON		SLEEVE	
S1244D9-3	.438 ID X 3	MIL-I-3190 CLASS A-B-2	COTTON		SLEEVE	
S1244E	AS REQUIRED	MIL-I-3190 CLASS H-B-1	FIBERGLASS		SLEEVE	
S1244E11-18	.330 ID X 18	MIL-I-3190 CLASS H-B-1	FIBERGLASS		SLEEVE	
S1244E11-48	.330 ID X 48	MIL-I-3190 CLASS H-B-1	FIBERGLASS		SLEEVE	
S1244E12-42	.294 ID X 42	MIL-I-3190 CLASS H-B-1	FIBERGLASS		SLEEVE	
S1244E15-10	.208 ID X 10	MIL-I-3190 CLASS H-B-1	FIBERGLASS		SLEEVE	
S1244E15-17	.208 ID X 17	MIL-I-3190 CLASS H-B-1	FIBERGLASS		SLEEVE	
S1244E16-28-1/2	.186 ID X 28-1/2	MIL-I-3190 CLASS H-B-1	FIBERGLASS		SLEEVE	
S1244E19-14	.133 ID X 14	MIL-I-3190 CLASS H-B-1	FIBERGLASS		SLEEVE	

Part Number	Size, Gauge, Straight Length	Material Spec	Fittings			
			Sleeve	Qty	Nut	Qty
ELECTRICAL SYSTEM (CONTINUED)						
S1244E19-29	.133 ID X 29	MIL-I-3190 CLASS H-B-1	FIBERGLASS		SLEEVE	
S1244E8-12	1/2 ID X	MIL-I-3190 CLASS H-B-1	FIBERGLASS		SLEEVE	
S1244F16-9	.186 ID X	MIL-I-3190 CLASS B-B-1	FIBERGLASS		SLEEVE	
S1244F9-3	.438 ID X	MIL-I-3190 CLASS B-B-1	FIBERGLASS		SLEEVE	
S4905	.313 IN. WIDE	L-P-349 TYPE III H2	COLOURLESS ACETATE		CELLULOSE	
S4905-00116	1.5 IN. LONG	L-P-349 TYPE III H2	COLOURLESS		CELLULOSE	
S4905-002	2 IN. LONG	L-P-349 TYPE III H2	COLOURLESS		CELLULOSE	
S4905-006	6 IN. LONG	L-P-349 TYPE III H2	COLOURLESS ACETATE		CELLULOSE	
41A-42112-56	1/4 X .028 X .56	WW-T-787 57S-O 30B/557	TUBE			
41A-42143	3/4 X .035 X	WW-T-789 65S-O				
41A-42144	3/4 X .035 X	WW-T-789 65S-O				
41A-42147	3/8 X .028 X 15-1/4	WW-T-787 57S-O 30B/968				
41A-42148	3/8 X .028 X 15.85	WW-T-787 57S-O 30B/968				
41A-42151-10	1/2 X .028 X 42	WW-T-789 65S-T4				
41A-42151-12	1/2 X .028 X 47-1/4	WW-T-789 65S-T4				
41A-42151-14	1/2 X .028 X 59.90	WW-T-789 65S-T4				
41A-51000-28	5/16 ID X 1/2 X	AMS 3207 SHORE HARD 25-35	SYNTHETIC RUBBER			
41A-51000-30	5/16 OD X .028 X	MIL-T-8506 18-8/304	CRE/ST		TYPE 304	
41A-51000-32	5/16 OD X .028 X	MIL-T-8506 18-8/304	CRE/ST		TYPE 304	

Part Number	Size, Gauge, Straight Length	Material Spec	Fittings			
			Sleeve	Qty	Nut	Qty
ELECTRICAL SYSTEM (CONTINUED)						
41A-51000-76	0.312 OD	CMS 534-40	NYLON			
41A-51000-77	0.312 OD	CMS 534-40	NYLON			
41A-51000-36	5/16 ID X 3/32 X	AMS 3207 SHORE HARD 25-35	SYNTHETIC RUBBER			

Part Number	Size, Gauge, Straight Length	Material Spec	Fittings			
			Sleeve	Qty	Nut	Qty
ELECTRONIC SYSTEM						
S1244B30-1	.034 ID X 1	MIL-I-7444 TYPE II	FLEXIBLE TUBE		PLASTIC	

Part Number	Size, Gauge, Straight Length	Material Spec	Fittings			
			Sleeve	Qty	Nut	Qty
FUEL SYSTEM						
41A-65200-27	2-3/4 ID X 3-1/2	MIL-H-6000				
41A-65200-38	3/8 X 0.035	WW-T-785 24S-T3 30B/838				
41A-65201-2	1 ID X 3-1/2	MIL-H-6000				
41A-65201-4	1 ID X 4	MIL-H-6000				
41A-65201-6	2-3/4 ID X 3-1/2	MIL-H-6000				
41A-65201-75	3/8 X 0.035	WW-T-789 65S-T6				
41A-65201-8	3/8 X 0.035	WW-T-700/3				
41A-65202-24	3/8 X 0.035	WW-T-789 65S-T6				
41A-65202-25	3/8 X 0.035	WW-T-789 65S-T6				
41A-65202-31	3/8 ID X 3	MIL-H-6000				
41A-65202-46	3/8 X 0.035	WW-T-789 65S-T6				
41A-65202-47	3/8 X 0.035	WW-T-789 65S-T6				
41A-65209-38	3/8 X 0.035	5052-0 WW-T-700/4	MS21922-6	1	MS21921-6D	1
41A-65243-27	3/8 ID X 3-1/2	MIL-H-6000				
41A-65400-30	3/8 X 0.035	WW-T-789 65S-T6	MS20819-6	2	AN818-6D	2
41A-65501-24	1/4 ID X 3-1/2	MIL-H-6000				
41A-65501-26	1 ID X 3-1/2	MIL-H-6000				
41A-65501-52	5/8 ID X 3-1/2	MIL-H-6000				
41A-65501-54	1-1/4 ID X 3-1/2	MIL-H-6000				
41A-65514-10	5/8 X 0.049 X 6.0	WW-T-789 65S-T6	MS20819-10	1	AN818-10D	1
41A-65514-4	5/8 X 0.035 X 17	WW-T-789 65S-0 30B/1957	MS20819-10	1	AN818-10D	1
41A-65514-6	1/4 X 0.028 X 9	WW-T-789 65S-T6	MS20819-4	1	AN818-4D	1
41A-65514-8	1/4 X 0.028 X 70	WW-T-789 65S-T6	MS20819-4	1	AN818-4D	1

Part Number	Size, Gauge, Straight Length	Material Spec	Fittings			
			Sleeve	Qty	Nut	Qty
HEAT & VENT & PRESSURIZATION SYSTEM						
S1286-12-12	1-1/2 X .06 X 3		GLASS CLOTH TUBE		RUBBER IMPREGNATED	
S1286-12-65	1-1/2 X .06 X 16-1/4		GLASS CLOTH TUBE		RUBBER IMPREGNATED	
S1286-14-12	1-3/4 X .06 X 3		GLASS CLOTH TUBE		RUBBER IMPREGNATED	
S1286-20-12	2-1/2 X .06 X 3		GLASS CLOTH TUBE		RUBBER IMPREGNATED	
S1286-5-10	5/8 X .06 X 2-1/2		GLASS CLOTH TUBE		RUBBER IMPREGNATED	
S1286-5-8	5/8 X .06 X 2		GLASS CLOTH TUBE		RUBBER IMPREGNATED	
S1286-6-10	3/4 X .06 X 2-1/2		GLASS CLOTH TUBE		RUBBER IMPREGNATED	
S1286-6-8	3/4 X .06 X 2		GLASS CLOTH TUBE		RUBBER IMPREGNATED	
41A-42000-118	1/4 ID X 2.3	MIL-H-6000				
41A-42000-83	1/16 X 1 IN. WIDE	HH-C-576 CLASS 2 TYPE 2B	CORK			
41A-42200-84	5/8 ID X 16	MIL-H-5881				
41A-42200-88	5/8 ID X 13	MIL-H-5881				
41A-95218-10	1/4 X .028 X 8	WW-T-787 57S-O 30B/557	MS20819-4	2	AN818-4D	2
41A-95218-12	1/4 X .028 X 8	WW-T-787 57S-O 30B/557	MS20819-4	2	AN818-4D	2
41A-95218-14	1/4 X .028 X 18	WW-T-787 57S-O 30B/557	MS21922-4 MS20819-4	1 1	MS21921-4D AN818-4D	1 1
41A-95218-16	1 X .028 X 17	WW-T-787 57S-O	MS20819-16	1	AN818-16D	1
41A-95218-26	1 X .028 X 25	WW-T-787 57S-O	MS20819-16	2	AN818-16D	2
41A-95218-28	1 X .028 X 25	WW-T-787 57S-O	MS20819-16	2	AN818-16D	2
41A-95218-30	1 X .028 X 3	WW-T-787 57S-O	MS20819-16	2	AN818-16D	2
41A-95218-32	1/4 X .028 X 2	WW-T-787 57S-O 30B/557	MS20819-4	2	AN818-4D	2
41A-95218-36	1 X .028 X 15	WW-T-787 57S-O	MS20819-16	2	AN818-16D	2
41A-95218-38	1 X .028 X 8	WW-T-787 57S-O	MS20819-16	2	AN818-16D	2

Part Number	Size, Gauge, Straight Length	Material Spec	Fittings			
			Sleeve	Qty	Nut	Qty
HEAT & VENT & PRESSURIZATION SYSTEM (CONTINUED)						
41A-95218-40	5/8 X .035 X 30	WW-T-787 57S-O 30B/981	MS20819-10	2	AN818-10D	2
41A-95218-42	5/8 X .035 X 20	WW-T-787 57S-O 30B/981	MS20819-10	2	AN818-10D	2
41A-95218-48	5/8 X .028 X 60	WW-T-787 57S-O 30B/982	MS20819-10	2	AN818-10D	2
41A-95218-50	5/8 X .028 X 50	WW-T-787 57S-O 30B/982	MS20819-10	2	AN818-10D	2
41A-95218-52	1 X .028 X	WW-T-787 57S-O	MS20819-16	2	AN818-16D	2
41A-95218-6	1/4 X .028 X 12	WW-T-787 57S-O 30B/557	MS20819-4	2	AN818-4D	2
41A-95218-8	1/4 X .028 X 21	WW-T-787 57S-O 30B/557	MS20819-4	2	AN818-4D	2
41A-97201-10	1/4 X .030 X 7-1/2	MPS 184-40 NYLON	MS20819-4	2	AN818-4D	2
41A-97201-12	1/4 X .028 X 8-1/2	WW-T-787 57S-O 30B/557	MS20819-4	1	AN818-4D	1
41A-97201-3	1/4 X .028 X 8-1/2	WW-T-787 57S-O 30B/557	MS20819-4	1	AN818-4D	1
41A-97201-4	1/4 X .030 X 41	MPS 184-40 NYLON	MS20819-4	2	AN818-4D	2
41A-97201-6	1/4 X .030 X 8-1/2	MPS 184-40 NYLON	MS20819-4	2	AN818-4D	2
41A-97201-8	1/4 X .030 X 7	MPS 184-40 NYLON	MS20819-4	2	AN818-4D	2
683204		1660-21-841-5601	COUPLING			

Part Number	Size, Gauge, Straight Length	Material Spec	Fittings			
			Sleeve	Qty	Nut	Qty
HYDRAULIC SYSTEM						
S4905-020	.313 IN. WIDE X 20	L-P-349 TYPE III H2	COLOURLESS ACETATE		CELLULOSE	
41A-42306-50	3/4 ID X 14-1/4	MIL-I-7444 TYPE II	FLEXIBLE TUBE		PLASTIC	
41A-42306-58	2 X 3	COMMERCIAL	TEMPERATURE RESISTING		TAPE	
41A-42324-10	1/4 X 0.035	WW-T-78965S-T6	MS21922-4	2	MS21921-4D	2
41A-42324-12	1/4 X 0.035	WW-T-78965S-T6	MS21922-4	2	MS21921-4D	2
41A-42324-14	1/4 X 0.035	WW-T-78965S-T6	MS21922-4	2	MS21921-4D	2
41A-42324-16	1/4 X 0.035	WW-T-78965S-T6	MS21922-6	2	MS21921-6D	2
41A-42324-18	1/4 X 0.035	WW-T-78965S-T6	MS21922-6	2	MS21921-6D	2
41A-42324-2	3/8 X 0.035	WW-T-78965S-T6	MS21922-6	2	MS21921-6D	2
41A-42324-20	1/4 X 0.035	WW-T-78965S-T6	MS21922-4	2	MS21921-4D	2
41A-42324-22	1/4 X 0.035	WW-T-78965S-T6	MS21922-4	2	MS21921-4D	2
41A-42324-24	1/4 X 0.035	WW-T-78965S-T6	MS21922-4	2	MS21921-4D	2
41A-42324-26	1/4 X 0.035	WW-T-78965S-T6	MS21922-4	2	MS21921-4D	2
41A-42324-32	3/8 X 0.035	WW-T-78965S-T6	MS21922-6	2	MS21921-6D	2
41A-42324-34	3/8 X 0.035	WW-T-78965S-T6	MS21922-6	2	MS21921-6D	2
41A-42324-36	3/8 X 0.035	WW-T-78965S-T6	MS21922-6	2	MS21921-6D	2
41A-42324-38	3/8 X 0.035	WW-T-78965S-T6	MS21922-6	2	MS21921-6D	2
41A-42324-4	3/8 X 0.035	WW-T-78965S-T6	MS21922-6	2	MS21921-6D	2
41A-42324-40	1/4 X 0.035	WW-T-78965S-T6	MS21922-4	2	MS21921-4D	2
41A-42324-42	1/4 X 0.035	WW-T-78965S-T6	MS21922-4	2	MS21921-4D	2
41A-42324-44	1/4 X 0.035	WW-T-78965S-T6	MS21922-4	2	MS21921-4D	2
41A-42324-46	1/4 X 0.035	WW-T-78965S-T6	MS21922-4	2	MS21921-4D	2
41A-42324-52	3/8 X 0.035	WW-T-78965S-T6	MS21922-6	2	MS21921-6D	2
41A-42324-54	3/8 X 0.035	WW-T-78965S-T6	MS21922-6	2	MS21921-6D	2
41A-42324-56	1/4 X 0.035	WW-T-78965S-T6	MS21922-4	2	MS21921-4D	2
41A-42324-58	1/4 X 0.035	WW-T-78965S-T6	MS21922-4	2	MS21921-4D	2
41A-42324-6	3/8 X 0.035	WW-T-78965S-T6	MS21922-6	2	MS21921-6D	2
41A-42324-60	1/4 X 0.035	WW-T-78965S-T6	MS21922-4	2	MS21921-4D	2
41A-42324-62	1/4 X 0.035	WW-T-78965S-T6	MS21922-4	2	MS21921-4D	2
41A-42324-64	1/4 X 0.035	WW-T-78965S-T6	MS21922-4	2	MS21921-4D	2
41A-42324-66	1/4 X 0.035	WW-T-78965S-T6	MS21922-4	2	MS21921-4D	2
41A-42324-68	1/4 X 0.035	WW-T-78965S-T6	MS21922-4	2	MS21921-4D	2
41A-42324-70	3/8 X 0.035	WW-T-78965S-T6	MS21922-6	2	MS21921-6D	2
41A-42324-74	3/8 X 0.035	WW-T-78965S-T6	MS21922-6	2	MS21921-6D	2
41A-42324-76	3/8 X 0.035	WW-T-78965S-T6	MS21922-6	2	MS21921-6D	2
41A-42324-78	3/8 X 0.035	WW-T-78965S-T6	MS21922-6	2	MS21921-6D	2

Part Number	Size, Gauge, Straight Length	Material Spec	Fittings			
			Sleeve	Qty	Nut	Qty
HYDRAULIC SYSTEM (CONTINUED)						
41A-42324-8	3/8 X 0.035	WW-T-78965S-T6	MS21922-6	2	MS21921-6D	2
41A-42324-80	3/8 X 0.035	WW-T-78965S-T6	MS21922-6	2	MS21921-6D	2
41A-42324-84	3/8 X 0.035	WW-T-78965S-T6	MS21922-6	2	MS21921-6D	2
41A-42324-86	1/4 X 0.035	WW-T-78965S-T6	MS21922-4	2	MS21921-4D	2
41A-42324-88	1/4 X 0.035	WW-T-78965S-T6	MS21922-4	2	MS21921-4D	2
41A-42325-14	1/4 X 0.035	WW-T-78965S-T6	MS21922-4	2	MS21921-4D	2
41A-42325-16	1/4 X 0.035	WW-T-78965S-T6	MS21922-4	2	MS21921-4D	2
41A-42325-18	1/4 X 0.035	WW-T-78965S-T6	MS21922-4	2	MS21921-4D	2
41A-42325-2	1/4 X 0.035	WW-T-78965S-T6	MS21922-4	2	MS21921-4D	2
41A-42325-20	1/4 X 0.035	WW-T-78965S-T6	MS21922-4	2	MS21921-4D	2
41A-42325-22	1/4 X 0.035	WW-T-78965S-T6	MS21922-4	2	MS21921-4D	2
41A-42325-24	1/4 X 0.035	WW-T-78965S-T6	MS21922-4	2	MS21921-4D	2
41A-42325-30	1/4 X 0.035	WW-T-78965S-T6	MS21922-4	2	MS21921-4D	2
41A-42325-32	1/4 X 0.035	WW-T-78965S-T6	MS21922-4	2	MS21921-4D	2
41A-42325-34	1/4 X 0.035	WW-T-78965S-T6	MS21922-4	2	MS21921-4D	2
41A-42325-36	1/4 X 0.035	WW-T-78965S-T6	MS21922-4	2	MS21921-4D	2
41A-42325-38	1/4 X 0.035	WW-T-78965S-T6	MS21922-4	2	MS21921-4D	2
41A-42325-4	1/4 X 0.035	WW-T-78965S-T6	MS21922-4	2	MS21921-4D	2
41A-42325-40	1/4 X 0.035	WW-T-78965S-T6	MS21922-4	2	MS21921-4D	2
41A-42325-42	1/4 X 0.035	WW-T-78965S-T6	MS21922-4	2	MS21921-4D	2
41A-42325-44	1/4 X 0.035	WW-T-78965S-T6	MS21922-4	2	MS21921-4D	2
41A-42325-46	1/4 X 0.035	WW-T-78965S-T6	MS21922-4	2	MS21921-4D	2
41A-42325-48	1/4 X 0.035	WW-T-78965S-T6	MS21922-4	2	MS21921-4D	2
41A-42325-50	1/4 X 0.035	WW-T-78965S-T6	MS21922-4	2	MS21921-4D	2
41A-42325-52	1/4 X 0.035	WW-T-78965S-T6	MS21922-4	2	MS21921-4D	2
41A-42325-54	1/4 X 0.035	WW-T-78965S-T6	MS21922-4	2	MS21921-4D	2
41A-42325-56	1/4 X 0.035	WW-T-78965S-T6	MS21922-4	2	MS21921-4D	2
41A-42325-58	1/4 X 0.035 x 10	WW-T-78965S-T6	MS21922-4	2	MS21921-4D	2
41A-42325-6	1/4 X 0.035	WW-T-78965S-T6	MS21922-4	2	MS21921-4D	2
41A-42325-60	1/4 X 0.035 x 6	WW-T-78965S-T6	MS21922-4	2	MS21921-4D	2
41A-42325-62	1/4 X 0.035 x 20	WW-T-78965S-T6	MS21922-6	2	MS21921-6D	2
41A-42325-64	1/4 X 0.035 x 22	WW-T-78965S-T6	MS21922-6	2	MS21921-6D	2
41A-42325-66	1/4 X 0.035 x 10	WW-T-78965S-T6	MS21922-4	2	MS21921-4D	2
41A-42325-68	1/4 X 0.035 x 6	WW-T-78965S-T6	MS21922-4	2	MS21921-4D	2
41A-42325-70	1/4 X 0.035 x 20	WW-T-78965S-T6	MS21922-6	2	MS21921-6D	2
41A-42325-72	1/4 X 0.035 x 22	WW-T-78965S-T6	MS21922-6	2	MS21921-6D	2
41A-42325-74	1/4 X 0.035	WW-T-78965S-T6	MS21922-4	2	MS21921-4D	2

Part Number	Size, Gauge, Straight Length	Material Spec	Fittings			
			Sleeve	Qty	Nut	Qty
HYDRAULIC SYSTEM (CONTINUED)						
41A-42325-76	1/4 X 0.035	WW-T-78965S-T6	MS21922-4	2	MS21921-4D	2
41A-42325-8	1/4 X 0.035	WW-T-78965S-T6	MS21922-4	2	MS21921-4D	2
41A-42326-10	1/4 X 0.035 x 30	WW-T-78965S-T6	MS21922-4	2	MS21921-4D	2
41A-42326-12	1/4 X 0.035 x 12	WW-T-78965S-T6	MS21922-4	2	MS21921-4D	2
41A-42326-14	1/4 X 0.035 x 22	WW-T-78965S-T6	MS21922-4	2	MS21921-4D	2
41A-42326-2	1/4 X 0.035 x 12	WW-T-78965S-T6	MS21922-4	2	MS21921-4D	2
41A-42326-22	1/4 X 0.035 x 13	WW-T-78965S-T6	MS21922-4	2	MS21921-4D	2
41A-42326-24	1/4 X 0.035 x 55	WW-T-78965S-T6	MS21922-4	2	MS21921-4D	2
41A-42326-26	1/4 X 0.035 x 60	WW-T-78965S-T6	MS21922-4	2	MS21921-4D	2
41A-42326-30	1/4 X 0.035 x 28	WW-T-78965S-T6	MS21922-4	2	MS21921-4D	2
41A-42326-32	1/4 X 0.035 x 11	WW-T-78965S-T6	MS21922-4	2	MS21921-4D	2
41A-42326-34	1/4 X 0.035 x 29	WW-T-78965S-T6	MS21922-4	2	MS21921-4D	2
41A-42326-36	1/4 X 0.035 x 29	WW-T-78965S-T6	MS21922-4	2	MS21921-4D	2
41A-42326-38	1/4 X 0.035 x 50	WW-T-78965S-T6	MS21922-4	2	MS21921-4D	2
41A-42326-4	1/4 X 0.035 x 14	WW-T-78965S-T6	MS21922-4	2	MS21921-4D	2
41A-42326-42	1/4 X 0.035 x 68	WW-T-78965S-T6	MS21922-4	2	MS21921-4D	2
41A-42326-44	1/4 X 0.035 x 38	WW-T-78965S-T6	MS21922-4	2	MS21921-4D	2
41A-42326-46	1/4 X 0.035 x 76	WW-T-78965S-T6	MS21922-4	2	MS21921-4D	2
41A-42326-50	1/4 X 0.035 x 15	WW-T-78965S-T6	MS21922-6	2	MS21921-6D	2
41A-42326-52	1/4 X 0.035 x 14	WW-T-78965S-T6	MS21922-6	2	MS21921-6D	2
41A-42326-54	1/4 X 0.035 x 28	WW-T-78965S-T6	MS21922-6	2	MS21921-6D	2
41A-42326-56	1/4 X 0.035 x 80	WW-T-78965S-T6	MS21922-6	2	MS21921-6D	2
41A-42326-6	1/4 X 0.035 X 9	WW-T-78965S-T6	MS21922-4	2	MS21921-4D	2
41A-42326-62	3/8 X 0.035 X 28	WW-T-78965S-T6	MS21922-6	2	MS21921-6D	2
41A-42326-64	3/8 X 0.035 X 52	WW-T-78965S-T6	MS21922-6	2	MS21921-6D	2
41A-42326-66	3/8 X 0.035 X 84	WW-T-78965S-T6	MS21922-6	2	MS21921-6D	2
41A-42326-68	3/8 X 0.035 X 80	WW-T-78965S-T6	MS21922-6	2	MS21921-6D	2
41A-42326-70	3/8 X 0.035 X 86	WW-T-78965S-T6	MS21922-6	2	MS21921-6D	2
41A-42326-72	1/4 X 0.035 X 15	WW-T-78965S-T6	MS21922-4	2	MS21921-4D	2
41A-42326-74	1/4 X 0.035	WW-T-78965S-T6	MS21922-4	2	MS21921-4D	2
41A-42326-76	1/4 X 0.035	WW-T-78965S-T6	MS21922-4	2	MS21921-4D	2
41A-42326-78	1/4 X 0.035	WW-T-78965S-T6	MS21922-4	2	MS21921-4D	2
41A-42326-8	1/4 X 0.035 X 30	WW-T-78965S-T6	MS21922-4	2	MS21921-4D	2
41A-42326-80	1/4 X 0.035	WW-T-78965S-T6	MS21922-4	2	MS21921-4D	2
41A-42326-82	1/4 X 0.035 X 30	WW-T-78965S-T6	MS21922-4	2	MS21921-4D	2
41A-42326-84	1/4 X 0.035 X 45	WW-T-78965S-T6	MS21922-4	2	MS21921-4D	2
41A-42326-86	3/8 X 0.035 X 90	WW-T-78965S-T6	MS21922-6	2	MS21921-6D	2

Part Number	Size, Gauge, Straight Length	Material Spec	Fittings			
			Sleeve	Qty	Nut	Qty
HYDRAULIC SYSTEM (CONTINUED)						
41A-42326-88	3/8 X 0.035 X 30	WW-T-78965S-T6	MS21922-6	2	MS21921-6D	2
41A-42326-90	3/8 X 0.035 X 50	WW-T-78965S-T6	MS21922-6	2	MS21921-6D	2
41A-42327-10	3/8 X 0.035 X 65	WW-T-78965S-T6	MS21922-6	2	MS21921-6D	2
41A-42327-12	3/8 X 0.035 X 30	WW-T-78965S-T6	MS21922-6	2	MS21921-6D	2
41A-42327-14	3/8 X 0.035 X 65	WW-T-78965S-T6	MS21922-6	2	MS21921-6D	2
41A-42327-16	3/8 X 0.035 X 70	WW-T-78965S-T6	MS21922-6	2	MS21921-6D	2
41A-42327-18	3/8 X 0.035 X 35	WW-T-78965S-T6	MS21922-6	2	MS21921-6D	2
41A-42327-20	3/8 X 0.035 X 70	WW-T-78965S-T6	MS21922-6	2	MS21921-6D	2
41A-42327-22	1/4 X 0.035 X 11-1/2	WW-T-78965S-T6	MS21922-4	2	MS21921-4D	2
41A-42327-24	3/8 X 0.035 X 13-1/2	WW-T-78965S-T6	MS21922-6	2	MS21921-6D	2
41A-42327-26	1/4 X 0.035 X 11	WW-T-78965S-T6	MS21922-4	2	MS21921-4D	2
41A-42327-38	1/4 X 0.035 X 8	WW-T-78965S-T6	MS21922-4	2	MS21921-4	2
41A-42327-40	1/4 X 0.035 X 7.62	WW-T-78965S-T6	MS21922-4	2	MS21921-4	2
41A-42327-8	1/4 X 0.035 X 11	WW-T-78965S-T6	MS21922-4	2	MS21921-4D	2
41A-42333-100	3/8 X 0.028 X 30	WW-T-78965S-T6	MS21922-6	2	MS21921-6	2
41A-42333-12	1/4 X 0.035 X 17	WW-T-78965S-T6	MS21922-4	2	MS21921-4D	2
41A-42333-14	1/4 X 0.035 X 10	WW-T-78965S-T6	MS21922-4	2	MS21921-4D	2
41A-42333-16	1/4 X 0.035 X 35	WW-T-78965S-T6	MS21922-4	2	MS21921-4D	2
41A-42333-18	3/8 X 0.035 X 8	WW-T-78965S-T6	MS21922-6	2	MS21921-6D	2
41A-42333-20	3/8 X 0.035 X 10	WW-T-78965S-T6	MS21922-6	2	MS21921-6D	2
41A-42333-22	3/8 X 0.035 X 8	WW-T-78965S-T6	MS21922-6	2	MS21921-6D	2
41A-42333-30	3/8 X 0.035 X 10	WW-T-78965S-T6	MS21922-6	2	MS21921-6D	2
41A-42333-302	3/8 X 0.035 X 30	WW-T-78965S-T6	MS21922-6	2	MS21921-6D	2
41A-42333-304	DELETED					
41A-42333-32	3/8 X 0.035 X 27	WW-T-78965S-T6	MS21921-6	2	MS21922-6D	2
41A-42333-324	3/8 X 0.035	WW-T-78965S-T6	MS21922-6	2	MS21921-6D	2
41A-42333-326	3/8 X 0.035	WW-T-78965S-T6	MS21922-6	2	MS21921-6D	2
41A-42333-328	3/8 X 0.028	MIL-T-6845 18-8/ 304 30B/2027	MS21922-8	2	MS21921-8	2
41A-42333-34	3/8 X 0.035 X 8	WW-T-78965S-T6	MS21922-6	2	MS21921-6D	2
41A-42333-36	3/8 X 0.035 X 56	WW-T-78965S-T6	MS21922-6	2	MS21921-6D	2
41A-42333-38	3/8 X 0.035 X 9	WW-T-78965S-T6	MS21921-6	2	MS21922-6D	2
41A-42333-4	1/4 X 0.035 X 19	WW-T-78965S-T6	MS21922-4	2	MS21921-4D	2
41A-42333-40	3/8 X 0.035 X 50	WW-T-78965S-T6	MS21922-6	2	MS21921-6D	2
41A-42333-44	3/8 X 0.035 X 25	WW-T-78965S-T6	MS21922-6	2	MS21921-6D	2
41A-42333-46	3/8 X 0.035 X 54	WW-T-78965S-T6	MS21922-6	2	MS21921-6D	2
41A-42333-48	3/8 X 0.035 X 56	WW-T-78965S-T6	MS21922-6	2	MS21921-6D	2
41A-42333-50	3/8 X 0.035 X 35	WW-T-78965S-T6	MS21922-6	2	MS21921-6D	2

Part Number	Size, Gauge, Straight Length	Material Spec	Fittings			
			Sleeve	Qty	Nut	Qty
HYDRAULIC SYSTEM (CONTINUED)						
41A-42333-52	3/8 X 0.035 X 34	WW-T-78965S-T6	MS21922-6	2	MS21921-6D	2
41A-42333-56	3/8 X 0.028 X 10	MIL-T-6845 18-8/ 304 30B/1977	MS21922-6	2	MS21921-6	2
41A-42333-58	1/4 X 0.035 X 18	WW-T-78965S-T6	MS21922-4	2	MS21921-4D	2
41A-42333-6	1/4 X 0.035 X 20	WW-T-78965S-T6	MS21922-4	2	MS21921-4D	2
41A-42333-60	3/8 X 0.035 X 14	WW-T-78965S-T6	MS21922-6	2	MS21921-6D	2
41A-42333-62	3/8 X 0.028 X 10	MIL-T-6845 18-8/ 304 30B/1977	MS21922-6	2	MS21921-6	2
41A-42333-64	3/8 X 0.035 X 12	WW-T-78965S-T6	MS21922-6	2	MS21921-6D	2
41A-42333-66	3/8 X 0.035 X 6	WW-T-78965S-T6	MS21922-6	2	MS21921-6D	2
41A-42333-68	3/8 X 0.035 X 20	WW-T-78965S-T6	MS21922-6	2	MS21921-6D	2
41A-42333-72	1/2 X 0.035 X 13	WW-T-78965S-T6	MS21922-8	2	MS21921-8D	2
41A-42333-74	1/2 X 0.028 X 6	MIL-T-6845 18-8/ 304 30B/2027	MS21922-8	2	MS21921-8	2
41A-42333-76	1/2 X 0.028 X 9	MIL-T-6845 18-8/ 304 30B/2027	MS21922-8	2	MS21921-8	2
41A-42333-78	1/2 X 0.028 X 15	MIL-T-6845 18-8/ 304 30B/2027	MS21922-8	2	MS21921-8	2
41A-42333-8	1/4 X 0.035 X 8	WW-T-78965S-T6	MS21922-4	2	MS21921-4D	2
41A-42333-82	3/8 X 0.035 X 9	WW-T-78965S-T6	MS21922-6	2	MS21921-6D	2
41A-42333-84	3/8 X 0.035 X8	WW-T-78965S-T6	MS21922-6	2	MS21921-6D	2
41A-42333-86	3/8 X 0.035 X 24	WW-T-78965S-T6	MS21922-6	2	MS21921-6D	2
41A-42333-88	3/8 X 0.035 X 11	WW-T-78965S-T6	MS21922-6	2	MS21921-6D	2
41A-42333-90	3/8 X 0.035 X 27	WW-T-78965S-T6	MS21922-6	2	MS21921-6D	2
41A-42333-92	3/8 X 0.035 X 10	WW-T-78965S-T6	MS21922-6	2	MS21921-6D	2
41A-42333-94	3/8 X 0.035 X 6	WW-T-78965S-T6	MS21922-6	2	MS21921-6D	2
41A-42333-950	1/2 X 0.028 X 5.5	MIL-T-6845 18-8/ 304 30B/2027	MS21922-8	2	MS21921-8	2
41A-42333-952	1/2 X 0.028 X 5.5	MIL-T-6845 18-8/ 304 30B/2027	MS21922-8	2	MS21921-8	2
41A-42333-98	3/8 X 0.028 X 30	MIL-T-6845 18-8/ 304 30B/1977	MS21922-6	2	MS21921-6	2
41A-75201-10	1/4 X 0.035 X 20	WW-T-78965S-T6	MS21922-4	2	MS21921-4D	2
41A-75201-12	1/4 X 0.035 X 20	WW-T-78965S-T6	MS21922-4	2	MS21921-4D	2
41A-75201-6	1/4 X 0.035 X 5	WW-T-78965S-T6	MS21922-4	2	MS21921-4D	2
41A-75201-8	1/4 X 0.035 X 5	WW-T-78965S-T6	MS21922-4	2	MS21921-4D	2
41A-75202-10	DELETED					
41A-75202-12	DELETED					
41A-75202-14	DELETED					
41A-75202-16	1/4 X 0.035 X 12	WW-T-78965S-T6	MS21922-4	2	MS21921-4D	2

Part Number	Size, Gauge, Straight Length	Material Spec	Fittings			
			Sleeve	Qty	Nut	Qty
HYDRAULIC SYSTEM (CONTINUED)						
41A-75202-18	1/4 X 0.035 X 9	WW-T-78965S-T6	MS21922-4	2	MS21921-4D	2
41A-75202-2	DELETED					
41A-75202-20	1/4 X 0.035 X 6	WW-T-78965S-T6	MS21922-4	2	MS21921-4D	2
41A-75202-22	1/4 X 0.035 X 5	WW-T-78965S-T6	MS21922-4	2	MS21921-4D	2
41A-75202-24	1/4 X 0.035 X 23	WW-T-78965S-T6	MS21922-4	2	MS21921-4D	2
41A-75202-26	1/4 X 0.035 X 5	WW-T-78965S-T6	MS21922-4	2	MS21921-4D	2
41A-75202-28	1/4 X 0.035 X 76	WW-T-78965S-T6	MS21922-4	2	MS21921-4D	2
41A-75202-42	1/4 X 0.035	WW-T-78965S-T6	MS21922-4	2	MS21921-4D	2
41A-75202-44	1/4 X 0.035	WW-T-78965S-T6	MS21922-4	2	MS21921-4D	2
41A-75202-46	1/4 X 0.035	WW-T-78965S-T6	MS21922-4	2	MS21921-4D	2
41A-75202-48	1/4 X 0.035	WW-T-78965S-T6	MS21922-4	2	MS21921-4D	2
41A-75202-50	1/4 X 0.035	WW-T-78965S-T6	MS21922-4	2	MS21921-4D	2
41A-75202-52	1/4 X 0.035	WW-T-78965S-T6	MS21922-4	2	MS21922-4D	2
41A-75202-6	DELETED					
41A-75202-8	1/4 X 0.035 X 12	WW-T-78965S-T6	MS21922-4	2	MS21921-4D	2

Part Number	Size, Gauge, Straight Length	Material Spec	Fittings			
			Sleeve	Qty	Nut	Qty
		OXYGEN SYSTEM				
41A-49052-10	3/16 X .030 X	WW-T-775 COPPER	AN800-3	2	AN805-3	2
41A-49052-2	3/16 X .030 X *	WW-T-775 COPPER	801364 AN800-3	1 1	 AN805-3	 1
41A-49052-20	3/16 X .030 X	WW-T-775 COPPER	AN785-3	2		
41A-49052-22	3/16 X .030 X	WW-T-775 COPPER	AN785-3 AN800-3	1 1	 AN805-3	 1
41A-49052-26	3/16 X .030 X	WW-T-775 COPPER	AN800-3	2	AN805-3	2
41A-49052-28	3/16 X .035 X	MIL-T-6845 18-8/304	MS20819-3	2	AN818-3	2
41A-49052-3	3/16 X .030 X *	WW-T-775 COPPER	801364 AN800-3	1 1	 AN805-3	 1
41A-49052-30	5/16 X .035 X	WW-T-787 57S-O 30B/963	MS20819-5	2	AN818-5	2
41A-49052-32	3/16 X .035 X	MIL-T-6845 18-8/304	MS20819-3	2	AN818-3	2
41A-49052-34	5/16 X .035 X	WW-T-787 57S-O 30B/963	MS20819-5	2	AN818-5	2
41A-49052-36	3/16 X .035 X	MIL-T-6845 18-8/304	MS20819-3	2	AN818-3	2
41A-49052-4	3/16 X .030 X	WW-T-775 COPPER	AN800-3	2	AN805-3	2
41A-49052-5	3/16 X .030 X	WW-T-775 COPPER	AN800-3	2	AN805-3	2
41A-49052-6	3/16 X .030 X	WW-T-775 COPPER	AN800-3	2	AN805-3	2
41A-49052-8	3/16 X .030 X	WW-T-775 COPPER	AN800-3	2	AN805-3	2
	*	ALTERNATIVE, 800289 BOTH G.S.M.				

Part Number	Size, Gauge, Straight Length	Material Spec	Fittings			
			Sleeve	Qty	Nut	Qty
PITOT STATIC SYSTEM						
S1244B15-49	.208 ID X 49	MIL-I-7444 TYPE II	FLEXIBLE TUBE		PLASTIC	
41-55750-106	1/4 X .035 X	WW-T-789 65S-T6	MS20819-4D	1	AN818-4D	1
41-55750-108	1/4 X .035 X	WW-T-789 65S-T6	MS20819-4D	1	AN818-4D	1
41-55750-184	1/4 X .035 X	WW-T-789 65S-T6	MS20819-4	1	AN818-4D	1
41-55750-188	1/4 X .035 X	WW-T-789 65S-T6	MS20819-4	1	AN818-4D	1
41A-42126-14	1/4 X .035 X	WW-T-789 65S-T6	MS20819-4	2	AN818-4D	2
41A-42126-16	1/4 X .035 X	WW-T-789 65S-T6	MS20819-4	2	AN818-4D	2
41A-42126-18	1/4 X .035 X	WW-T-789 65S-T6	MS20819-4	2	AN818-4D	2
41A-42126-2	1/4 OD X .03 X	MPS 184-40 NYLON	MS20819-4	2	AN818-4D	2
41A-42126-20	3/8 X .035 X	WW-T-789 65S-T6	MS20819-6	2	AN818-6D	2
41A-42126-26	3/8 X .035 X	WW-T-789 65S-T6	MS20819-6	2	AN818-6D	2
41A-42126-28	3/8 X .035 X	WW-T-789 65S-T6	MS20819-6	2	AN818-6D	2
41A-42126-30	3/8 X .035 X	WW-T-789 65S-T6	MS20819-6	2	AN818-6D	2
41A-42126-32	3/8 X .035 X	WW-T-789 65S-T6	MS20819-6	2	AN818-6D	2
41A-42126-34	3/8 X .035 X	WW-T-789 65S-T6	MS20819-6	2	AN818-6D	2
41A-42126-36	1/4 X .035 X	WW-T-789 65S-T6	MS20819-4	2	AN818-4D	2
41A-42126-38	3/8 X .035 X	WW-T-789 65S-T6	MS20819-6	2	AN818-6D	2
41A-42126-4	3/8 OD X .04 X	MPS 184-40 NYLON	MS20819-6	2	AN818-6D	2
41A-42126-40	1/4 X .03 X	MPS 184-40 NYLON	MS20819-4	2	AN818-4D	2
41A-42126-42	1/4 X .03 X	MPS 184-40 NYLON	MS20819-4	2	AN818-4D	2
41A-42126-6	1/4 X .035 X	WW-T-789 65S-T6	MS20819-4	2	AN818-4D	2
41A-42126-8	1/4 X .035 X	WW-T-789 65S-T6	MS20819-4	2	AN818-4D	2

Part Number	Size, Gauge, Straight Length	Material Spec	Fittings			
			Sleeve	Qty	Nut	Qty
		TAPE				
JAN-P-127	1 IN. & 2 IN. WIDE	TYPE I GRADE B	TAPE		AS REQUIRED	
LAC-24-426 TYPE II	1 IN. WIDE	VINYL	TAPE		AS REQUIRED	
MIL-C-5040	.14 IN. DIA	TYPE II NYLON CORD				
S1207-18	1 IN. WIDE		IDENT TAPE		AS REQUIRED	
S1214-180			IDENT TAPE		AS REQUIRED	
S1214-37			IDENT TAPE		AS REQUIRED	
41A-42301-92	2 IN. WIDE	PPP-T-60 TYPE 3 CLASS 2	TAPE		AS REQUIRED	
41A-90432-10	1-7/16 DIA 1/2 THICK	COMMERCIAL CORK	CORK		AS REQUIRED	
472 (MMM)	1 IN. WIDE	VINYL	TAPE		AS REQUIRED	
7000 (SEO)	1 IN. WIDE	INSULATING	MYSTIK TAPE		AS REQUIRED	
7000G (SEO)	1 IN. & 2 IN. WIDE	INSULATING	MYSTIK TAPE		AS REQUIRED	
70006 (SEO)	1 IN. & 2 IN. WIDE	INSULATING	MYSTIK TAPE		AS REQUIRED	
7402 (SEO)	1 IN. & 2 IN. WIDE	INSULATING	MYSTIK TAPE		AS REQUIRED	
80 (CVL)	1 IN. WIDE	BLACK	VELCRO TAPE (HOOK)		AS REQUIRED	
88 (JMV)	3/64 X 2 IN. WIDE	ASBESTOS	SHEET		AS REQUIRED	

Part Number	Size, Gauge, Straight Length	Material Spec	Fittings			
			Sleeve	Qty	Nut	Qty
TRIM (INTERIOR)						
K41A-10006-12		MIL-STD-417, NSN 9320-21-807-2988	RUBBER			
41-323-002-51	1/16 X 11	MIL-C-1511	CABLE			
41-323-002-52		QQ-W-321 COMP A/B 1/8 HARD	WIRE BRASS			
41-323-003-11	1/16 X 14	MIL-C-1511	CABLE			
41-323-012-6	1/16 X 1 X 3-1/2	AMS3240 SHORE 40	RUBBER			
41-323-015-13	1/16 X 23	MIL-C-1511	CABLE			
41A-35005-112	1/16 X 1/2 X 12	MIL-R-3065 SB612EFF	RUBBER			
41A-35005-114	.032 X 1.55 X	MPS184-27	RUBBER			
41A-35005-116	.032 X 2.05 X	MPS184-27	RUBBER			
41A-35005-128	.032 IN. THICK	MPS184-27	RUBBER			
41A-35005-129	.032 IN. THICK	MPS184-27	RUBBER			
41A-35005-30	.032 X 1.6 X	MPS184-27	RUBBER			
41A-35005-32	.032 X 1.1 X	MPS184-27	RUBBER			
41A-35125-36	83 IN. LONG	S4550 AMS3301 NSN 9320-21-802-3122	SEAL, RUBBER, NONMETALLIC SPECIAL SHAPED SECTION	AR		
41A-35126-140		P/N S4551 AMS3301 NSN 9390-21-802-3144	SEAL, RUBBER, NONMETALLIC SPECIAL SHAPED SECTION	AR		
41A-41567-10	3/16 IN. DIA	MIL-C-5650	ELASTIC CORD			
41A-41567-6	3/16 IN. DIA	MIL-C-5650	ELASTIC CORD			
41A-43014-92	1/4 X 5 X 5	MIL-R-6130 GRADE A TYPE II	COND MED			
41A-43014-94	1/4 X 4 X 3	MIL-R-6130 GRADE A TYPE II	COND MED RUBBER			
41A-52011-42	45 IN. LONG	S4718 NSN 9320-21-812-3307	SPECIAL SHAPED SECTION (CENTRE)		RUBBER	
41A-52011-44	4-1/2 IN. LONG	S4718 NSN 9320-21-812-3307	SPECIAL SHAPED SECTION (LH)		RUBBER	
41A-52011-45	4-1/2 IN. LONG	S4718 NSN 9320-21-812-3307	SPECIAL SHAPED SECTION (RH)		RUBBER	
41A-90765-40	.050 IN. THICK	MIL-C-8068 TYPE 2	RUBBER COATED		NYLON CLOTH	
41A-90765-42	.050 IN. THICK	MIL-C-8068 TYPE 2	RUBBER COATED		NYLON CLOTH	
41A-90765-44	.060 to .070 THICK MIL-P-15035C TYPE FDE NSN 5970-21-808-5633 SHEET PHENOLIC RESIN AS REQUIRED					
41A-90765-76	1/16 IN. THICK MIL-R-6855 CLASS 2					
41A-90765-78	NSN 9320-00-241-9754 SHEET RUBBER AS REQUIRED					

Part Number	Size, Gauge, Straight Length	Material Spec	Fittings			
			Sleeve	Qty	Nut	Qty
TRIM (INTERIOR) (CONTINUED)						
41A-95212-54	1/16 IN. THICK	MIL-G-6183 CLASS 1 MEDIUM	CORK		AS REQUIRED	
41A-95212-56	3/8 IN. THICK	CF206 TYPE 1 CLASS 16R1	FELT		AS REQUIRED	
41A-95212-57	3/8 IN. THICK	CF206 TYPE 1 CLASS 16R1	FELT		AS REQUIRED	
41A-95212-58	3/8 IN. THICK	CF206 TYPE 1 CLASS 16R1	FELT		AS REQUIRED	
41A-95212-60	3/8 IN. THICK	CF206 TYPE 1 CLASS 16R1	FELT		AS REQUIRED	
41A-95212-62	3/8 IN. THICK	CF206 TYPE 1 CLASS 16R1	FELT		AS REQUIRED	
41A-95212-64	3/8 IN. THICK	CF206 TYPE 1 CLASS 16R1	FELT		AS REQUIRED	
41A-52011-66	1/16 IN. THICK	MIL-G-6183 CLASS 1 MEDIUM	CORK		AS REQUIRED	
110-004-2-1440	PYLON ASSY, REFER TO FIGURE 61D, INDEX 2 AND 23	SYNTHETIC RUBBER - SPECIAL SHAPED SECTION NSN 9390-00-027-3340			AS REQUIRED	
OR						
11M600	PYLON ASSY, REFER TO FIGURE 61D, INDEX 2 AND 23	MIL-S-6855 CLASS 2, GRADE 40 NSN 9390-00-290-2217			AS REQUIRED	
			DESCRIPTION			
9505-21-859-2942	.098 DIA	QQ-W423	PIN, HINGE (MLG LEG, DOOR) FIG 47-7			
9505-21-859-2943	.096 DIA	QQ-W423	PIN, HINGE (MLG LEG, DOOR) FIG 47-7			

Part Number	Size, Gauge, Straight Length	Material Spec	Fittings			
			Sleeve	Qty	Nut	Qty
		MISCELLANEOUS				
S1244B17-1/2	.166 ID X 1/2	MIL-I-7444 TYPE 11	FLEXIBLE TUBE		PLASTIC	
S1244B7-1/2	.625 ID X 1/2	MIL-I-7444 TYPE 11	PLASTIC TRANSPARENT			
41A-41550-28	1 IN. WIDE	NO. 80 UNBLEACHED	VELCRO TAPE		(PILE)	
41A-41550-30	1 IN. WIDE	NO. 80 UNBLEACHED	VELCRO TAPE		(HOOK)	
41A-41560-3	3/4 IN. WIDE	NO. 80	VELCRO TAPE		(HOOK)	
41A-41560-4	3/4 IN. WIDE	NO. 80	VELCRO TAPE		(PILE)	
41A-41567-13	1 IN. WIDE	NO. 80	VELCRO TAPE		(PILE)	
41A-41567-14	1 IN. X 2 IN.	NO. 80	VELCRO TAPE		(HOOK)	
41A-41567-15	1 IN. WIDE	NO. 80	VELCRO TAPE		(PILE)	
41A-41567-16	1-1/4 IN. X 1-2/5 IN.	NO. 80	VELCRO TAPE		(HOOK)	
41A-41567-18	2 IN. X 24 IN.	NO. 80	VELCRO TAPE		(HOOK)	
41A-41567-8	5/8 IN. WIDE	MIL-T-5083 TYPE IV	WEBBING			
41A-42213-19	1 IN. WIDE	NO. 80 BLACK	VELCRO TAPE		(HOOK)	
41A-42213-20	1 IN. WIDE	NO. 80 BLACK	VELCRO TAPE		(PILE)	

Part Number	Size, Gauge, Straight Length	Material Spec	Fittings			
			Sleeve	Qty	Nut	Qty
EMERGENCY HYDRAULIC SYSTEM (SNOWBIRD)						
NW4513069-1	1/4 X .035	MIL-T-6845	MS20819-4J MS21922-4	1 1	AN818-4 MS21921-4	1 1
NW4513069-2	1/4 X .035	MIL-T-6845	MS20819-4J MS21922-4	1 1	AN818-4 MS21921-4	1 1
NW4513069-3	1/4 X .035	MIL-T-6845	MS20819-4J MS21922-4	1 1	AN818-4 MS21921-4	1 1
NW4513069-4	3/8 X .035	MIL-T-6845	MS21922-6	1	MS21921-6	1
NW4513069-5	3/8 X .035	MIL-T-6845	MS21921-6	1	MS21922-6	1
NW4513069-6	3/8 X .035	MIL-T-6845	MS21921-6	1	MS21922-6	1
NW4513069-7	3/8 X .035	MIL-T-6845	MS21921-6	1	MS21922-6	1

Part Number	Size, Gauge, Straight Length	Material Spec	Fittings			
			Sleeve	Qty	Nut	Qty
SMOKE SYSTEM (SNOWBIRD)						
NW4514059-1	3/8 X .035	WW-T-700/4	MS20819-6J	2	AN818-6D	2
NW4514059-2	3/8 X .035	WW-T-700/4	MS20819-6J	2	AN818-6D	2
NW4514059-3	1/2 X .049	WW-T-700/4	MS20819-8J	2	AN818-8D	2
NW4514059-4	1/2 X .049	WW-T-700/4	MS20819-8J	2	AN818-8D	2
NW4514059-5	1/2 X .049	WW-T-700/4	MS20819-8J	2	AN818-8D	2
NW4514059-6	1/2 X .049	WW-T-700/4	MS20819-8J	2	AN818-8D	2
NW4514059-7	1/2 X .049	WW-T-700/4	MS20819-8J	2	AN818-8D	2
NW4514059-8	1/2 X .049	WW-T-8808	MS20819-8J	2	AN818-8D	2
NW4514059-9	1/2 X .049	WW-T-700/4	MS20819-8J	2	AN818-8D	2

PART 5

NUMERICAL PART LIST

This Part 5 Numerical Part List, dated 01 April 2005, includes all revisions and changes up to this date.

The Numerical Part List is sorted in alphanumerical order using the following sequence;

Dash (-);
Oblique (/);
Numbers (1 to 9); and
Letters (A to Z).

Example: 1-000
1/000
10000
1A000

PART NUMBER	FIG AND INDEX NO	QTY /AC
010-10052-05	2-14-7 - 14	1
0101800-01	2-16-3 - 35	1
0113207-11	2-16-3 -	1
0225255	2-12-15 - 39	1
030-2086-000	2-13-2 -	87
030-2087-000	2-13-2 -	80
030-2088-000	2-13-4 -	18
0310-272-501	2-5-3 - 3	1
0325431	2-16-5 - 9	1
0325432	2-16-5 - 12	1
0325433	2-12-13 - 6A	REF
	2-16-5 - 10	1
0325434	2-16-5 - 4	1
0325436	2-16-5 - 16	1
09016	2-14-3 - 1	1
10-101949-12	2-12-9 -	1
10-101949-20	2-12-9 -	1
	2-13-4 -	1
10-101949-24	2-12-9 -	1
10-150949-10	2-12-17 -	1
10-150949-16	2-12-17 -	1
10-150949-20	2-12-9 -	1
	2-12-9 -	1
	2-12-9 -	1
	2-12-17 -	1
	2-12-17 -	1
	2-12-17 -	1
10-150949-22	2-12-9 -	1
	2-12-9 -	1
	2-12-17 -	1
	2-12-17 -	1
10-150949-24	2-12-9 -	1
	2-12-9 -	1
10-260131-201	2-12-17 - 68	1
10-36675-10	2-12-17 -	1
10-36675-18	2-12-3 - 70	1
	2-12-3 - 83	1
	2-12-17 -	1
10-37090-121	2-12-17 - 67	1
1000-35	2-7-11 - 22	4
10011-6A	2-11-1 -	
10011-7	2-11-1 - 67	2
100994	2-4-9 - 42	REF
100994-1	2-4-1 - 23	REF
	2-4-8 - 33	REF
	2-8-12 - 20	2
101-0536-65-7	2-14-2 - 58	1
102196-2	2-9-1 - 1	REF
	2-9-3 - 5	1
10225-68-1	2-5-1 - 18	1
	2-5-6 - 14	1
10225-84	2-5-5 - 7	1
103308-1	2-9-1 - 2	REF
	2-9-3 - 7	1
103351	2-6-13 - 17	1
	2-6-13 - 10	1
105-0202-200	2-12-6 - 70	2
105-0203-200	2-12-6 - 98	1
105-0206-200	2-12-6 - 97	2
105-0856-001	2-13-2 - 49	3
105-0858-001	2-13-2 -113	2
105-0862-001	2-13-2 - 90	2
105-2202-205	2-13-2 -122	2
105-2203-205	2-13-2 -108	1
105-2204-205	2-13-2 -140	3
105-2207-205	2-13-2 -141	3
105-2210-205	2-13-2 -127	3
10558N01Y00	2-14-2 -	1
107A	2-12-11 -	1
	2-12-14 - 10	1
	2-12-15 -	4
	2-12-29 - 9	1
	2-14-2 -	1
109H	2-13-4 - 62	1

PART NUMBER	FIG AND INDEX NO	QTY /AC
10HA1C1F1J3	2-14-5 -	2
LAN1R1V13		
10HA1C1F1J3	2-14-5 -	2
LRN1R1V13		
10HL(A)	2-14-2 -	4
10HL(R)	2-14-2 -	4
10HR1V13	2-14-2 -	2
11008-7240	2-9-8 - 10	1
1100B52Z4	2-6-7 - 22	1
	2-6-7 - 34	1
1108-02	2-4-8 -	8
1112-589976	2-8-8 - 34	1
1112-589977	2-8-4 - 24	1
	2-8-9 - 12	1
	2-8-9 - 29	1
	2-8-9 - 48	1
1112-589978R	2-8-10 - 4	1
11182B-CL41	2-9-6 - 19	1
112-040	2-13-2 -	1
	2-13-2 -	1
	2-13-2 -	5
	2-13-4 -	1
112-589977	2-8-9 - 67	2
114016SB-2	2-6-13 - 6	1
114023SB-1	2-6-11 -	1
114023SB-2	2-6-11 -	1
114029SB-1	2-6-11 - 19	1
114029SB-2	2-6-11 -	1
117RR-A15S	2-12-7 -117	REF
	2-13-3 - 24	1
117RR-C37S	2-12-7 -118	REF
	2-12-7 -119	REF
	2-13-3 - 24A	2
1182B-CL41	2-9-1 - 16	REF
118J000-(B)	2-6-1 - 39	REF
	2-6-9 - 1	2
11A00227P01	2-3-6 - 5	1
	2-3-6 - 8	1
11A00228G01	2-3-6 - 4	1
	2-3-6 - 4	1
11A0028G02	2-3-6 - 7	1
120	2-13-2 -	AR
121009-1	2-5-3 - 34	1
121009-4	2-5-3 - 37	1
12164-1311	2-7-10 -	1
12164-1424	2-7-10 -	1
12164-511	2-7-10 -	1
1225C6-65	2-3-17 - 22	1
1227-1	2-14-2 - 41	1
	2-14-5 - 12	2
1227-2	2-14-2 - 42	1
	2-14-5 - 13	2
124623-01-10	2-12-1 -	REF
	2-12-10 -	REF
	2-14-4 -	1
124623-01-14	2-12-1 - 11	REF
	2-14-4 - 1	1
124623-10-14	2-12-10 - 23	REF
128-2VC	2-12-5 -	8
133-3701-401	2-14-7 -	1
135751	2-9-3 -	1
138474-01-01	2-12-1 - 13	REF
	2-14-4 - 3	1
13AT2	2-7-11 - 29	1
14	2-16-4 -	2
14-562-1	2-6-1 - 22	REF
	2-6-5 - 3	3
140140-01-01	2-14-2 - 6	1
14523-14	2-9-3 -	1
14523-2	2-9-3 -	1
14615	2-9-3 -	1
14625	2-9-3 -	1
14684	2-9-3 -	1
14990	2-9-3 -	1

PART NUMBER	FIG AND INDEX NO	QTY /AC
1500-059-3	2-12-15 -20	1
15183-53125SH	2-9-3 - 6	1
152B22A	2-14-2 -19	1
152NM	2-16-1 -14	2
1541	2-12-12 -	
1543	2-12-12 -	
15489-3	2-7-10 -21	1
	2-7-10 -28	1
15510B	2-6-5 -24	2
15571-1	2-7-10 -41	1
1559-10-03	2-14-2 -18	1
16-21B	2-13-2 -85	1
160554-1	3-7 -	1
160554-2	3-7 -	1
160555-1	3-7 -	1
	3-7 -	1
160556-1	3-7 -18	1
	3-7 -20	1
160557-1	3-4 - 5	2
	3-4 - 7	1
	3-6 -	2
	3-6 -	1
160557-2	3-4 - 9	1
	3-4 -15	2
	3-4 -18	1
	3-4 -31	1
	3-6 -	1
	3-6 -	2
160557-3	3-4 -11	1
	3-4 -13	1
	3-4 -41	1
	3-6 -	1
	3-6 -	1
	3-6 -15	1
160557-4	3-6 -	1
	3-6 -	1
	3-6 -	1
160557-5	3-4 -22	1
	3-4 -33	1
	3-6 -	1
160557-6	3-4 -26	1
	3-4 -35	1
	3-6 -	1
160557-7	3-4 - 2	3
	3-4 -20	1
	3-4 -24	1
	3-4 -28	1
	3-4 -39	1
	3-6 -	1
	3-6 -	1
160557-8	3-4 -37	2
	3-6 -	2
160559-1	3-5 - 7	2
160560-1	3-5 - 6	1
160560-2	3-5 - 5	1
160561-1	3-5 - 8	4
160563-4	2-17-2 -	2
160563-5	2-17-2 -12	1
160563-6	2-17-2 -15	1
160563-7	2-17-2 - 5	2
160564-1	3-5 - 9	1
160566-1	3-4 -51	1
160566-2	3-4 -52	1
160566-3	3-4 -53	2
160567-1	3-4 -54	1
160567-2	3-4 -55	1
160568-1	3-4 -57	2
160569-1	3-4 -	2
160570-1	3-4 -56	2
160571-1	3-4 -61	1
160572-1	3-4 -59	1
160572-2	3-4 -60	1
160573-1	3-5 -10	1
160574-1	3-5 -12	1

PART NUMBER	FIG AND INDEX NO	QTY /AC
160575-1	3-5 - 13	1
160581-1	3-7 - 13	2
16163-3	2-12-7 -	1
165-61-1014	2-12-17 - 3	1
16505-420-1	2-4-7 - 29	2
172934-001	2-13-2 - 9	1
178052-1	2-9-7 - 24	1
18-1417	2-14-2 - 21	1
18-200	2-13-5 - 6	1
18276-150	2-9-7 - 43	1
18276-200	2-9-8 - 19	6
18276-250	2-5-1 - 22	1
	2-9-2 - 12	REF
	2-9-8 - 21	1
	2-9-8 - 29	REF
19325-3	2-11-1 - 82	REF
	2-14-2 - 27	2
19325-5	2-11-1 - 82	
	2-14-2 - 27	2
1947-1	2-12-14 -	3
19D2-2	2-8-3 - 21	1
1B1000-1G-RR-901	2-12-3 -	2
1G349-3	2-6-1 - 36	REF
	2-6-7 - 28	2
	2-12-8 - 70	REF
1N1614	2-13-2 -157	2
1N3613	2-13-2 -102	3
	2-13-4 - 64	3
1N4048R	2-12-6 - 16	1
1N4148	2-13-2 -125	5
	2-13-4 - 58	1
1N5355B	2-13-4 - 73	1
1N5361B	2-13-2 -105	1
1N5364B	2-13-2 - 93	4
	2-13-4 - 51	1
1N5551	2-12-22 -	2
1N5625	2-13-2 - 89	5
	2-13-2 -158	5
	2-13-4 - 70	17
1N614	2-13-4 - 55	1
1N758A	2-13-2 - 95	1
20-0084-1C	2-13-4 -	2
20-0084-2C	2-13-4 -	2
2024-4-4S	2-3-16 - 19	1
2030-015	2-6-5 -	1
203910-1	2-9-7 - 25	1
205000L3/4	2-8-3 - 7	1
20A132-3	2-14-4	1
	2-14-4	1
20AS132-3	2-12-17 - 69	1
20AS133-4	2-14-4 - 21	1
	2-14-4 - 24	1
20P172-3	2-14-4 - 30	2
	2-14-4 - 31	1
20P228-4	2-14-4 - 18	1
	2-14-4 - 27	1
20P228-6	2-12-20 - 3	4
20P230-4	2-12-8 - 17	1
	2-12-17 - 11	1
	2-14-4 - 32	1
20P230-5	2-14-4 - 17	1
	2-14-4 - 26	1
2110-2	2-9-1 - 13	REF
	2-9-5 - 59	2
212-12ND	2-12-10 - 13	1
214-16	2-1-4 - 61	36
	2-3-4 -	2
	2-3-4 -	2
	2-3-4 - 52	3
	2-3-18 -	16
214-16D	2-1-4 - 1	47
21428-16	2-7-10 - 27	1
21428-22	2-7-10 - 20	2

PART NUMBER	FIG AND INDEX NO	QTY /AC
	2-7-10 - 26	1
21429	2-7-10 - 29	1
21430	2-7-10 - 22	1
21431	2-7-10 - 23	1
21432	2-7-10 - 43	1
21433	2-7-10 - 44	1
21434-1	2-7-10 - 42	1
215-90012	2-3-13 - 25	1
215027	2-8-6 -	2
21505-44	2-7-10 - 40	2
21861	2-7-10 - 30	1
21862	2-7-10 - 45	1
21EN9-6	2-4-3 - 18	7
	2-12-23 - 21	REF
21GM4-190	2-8-4 - 39	1
21SN41-105	2-6-5 - 53	REF
	2-12-1 - 26	REF
	2-12-18 - 5	1
22558-11	2-3-11 - 11	1
22558-14	2-3-11 - 12	1
22559-11	2-3-11 - 13	1
227-28-5A	2-12-3 - 9	1
22866-13	2-5-3 - 36	3
22866-3	2-5-3 -	4
22866-5	2-5-3 - 33	4
22866-9	2-5-3 - 35	3
22922	2-12-22 -	4
	2-12-22 - 7	6
	2-12-25 -	4
	2-12-25 -	2
2297-13GM	2-16-3 -	1
22K2-02	2-3-8 -	2
230-20060	2-6-5 - 16	1
2362-63-1078	2-6-5 -	2
2366-63-1078SH	2-6-5 - 20	2
23693	2-12-22 - 6	6
	2-12-25 - 5	6
	2-12-25 - 70	2
24-100D2	2-8-14 - 1	1
24-100D3	2-8-14 -	1
24096-150A	2-9-7 -	1
24096-200C	2-9-8 -	6
24346-250C	2-5-1 -	1
	2-9-8 -	1
244-16	2-3-4 - 51	3
244-16C	2-3-9 - 13	6
244-16D	2-3-20 - 37	6
244-22	2-12-16 -	4
24418082	2-12-1 - 34	REF
	2-12-22 - 5	4
24421082	2-12-25 -	6
245-976054-000	2-13-4 - 22	1
	2-14-2 - 77	REF
2452-02	2-4-10 -	2
2452-02RET	2-4-10 -	2
24538-125	2-5-5 - 10	1
24538-150	2-5-1 -	1
24540-125	2-5-1 - 8	1
	2-5-5 - 31	REF
	2-9-7 - 38	2
24540-150	2-5-1 - 7	1
	2-5-1 - 20	1
	2-5-5 - 30	REF
24540-200	2-9-8 - 16	1
247-5/8	2-17-2 - 7	2
249149	2-12-5 -	1
2499	2-3-16 - 36	1
24D15.200	2-13-2 -118	1
25830071	2-12-6 - 38	1
	2-12-7 -115	REF
2600-32	2-6-5 -	4
2600-LW	2-14-7 -	2
2602-832	2-12-18 - 17	1
261437-1	3-3 - 23	1

PART NUMBER	FIG AND INDEX NO	QTY /AC
26220068	2-9-1 -21	REF
	2-9-1 -26	REF
	2-9-7 - 8	1
	2-12-8 -63	REF
2630269	2-6-6 -	1
	2-6-6 -	1
2630363	2-6-1 -27	REF
	2-6-6 -16	1
	2-6-6 -45	1
2633496	2-6-6 -17	2
	2-6-6 -46	2
265159-1	3-4 - 6	2
	3-6 -	2
265159-10	3-4 -27	1
	3-4 -36	1
	3-6 -	1
265159-11	3-4 -29	1
	3-6 -	1
265159-12	3-4 -38	2
	3-6 -	2
265159-13	3-4 -40	1
	3-6 -	1
265159-14	3-4 - 3	3
	3-6 -	1
265159-15	3-4 -42	1
	3-6 -18	1
265159-2	3-4 - 8	1
	3-6 -	1
265159-3	3-4 -10	1
	3-4 -19	1
	3-4 -32	1
	3-6 -	1
265159-4	3-4 -12	1
	3-6 -	1
265159-5	3-4 -14	1
	3-6 -	1
265159-6	3-4 -16	2
	3-6 -	2
265159-7	3-4 -21	1
	3-6 -	1
265159-8	3-4 -23	1
	3-4 -34	1
	3-6 -	1
265159-9	3-4 -25	1
	3-6 -	1
265180-1	3-3 -12	1
265181-1	3-3 -17	1
265196-1	2-17-1 - 3	2
265197-1	3-3 - 1	1
265198-1	3-3 - 2	1
265200-1	2-17-1 - 6	1
265201-1	3-7 - 3	1
265202-1	3-7 - 2	1
265203-1	3-7 - 1	1
265204-1	3-7 - 8	1
265205-1	3-7 - 5	1
265206-1	3-7 - 6	1
265207-1	3-7 - 4	1
265208	3-3 -	1
265210-1	3-6 -	1
265211-1	3-6 -	1
265212-1	3-6 -	1
265213-1	3-6 -	1
265215-1	3-3 -	1
265216-1	3-3 -	1
265217-1	3-3 -	1
265218-1	3-3 -	2
	3-3 -	2
2660333M2	2-6-1 -33	REF
	2-6-7 - 2	1
26S8-2	2-5-4 - 6	2
26S8-3	2-12-10 -17	1
26S8-4	2-14-7 - 2	2
27660-3	2-11-1 -48	1

PART NUMBER	FIG AND INDEX NO	QTY /AC	PART NUMBER	FIG AND INDEX NO	QTY /AC	PART NUMBER	FIG AND INDEX NO	QTY /AC
277A4EE	2-8-8 - 27	1		2-8-13 - 18	4	360278-1	3-9 -22	1
279A4TB	2-9-1 - 18	REF	316-7-6	2-3-15 -	AR	360279-1	3-9 -20	1
	2-9-6 - 15	1	316E4-6	2-6-6 - 9	7	360280-1	3-9 -19	1
28-1C	2-6-10 - 35	4	321094-3-1	2-9-1 - 20	REF	360281-1	3-9 -17	3
28-27129-2	2-17-1 - 16	2		2-9-5 - 62	REF	360282-1	3-9 -15	3
28-27129-4	2-17-1 - 17	2		2-9-7 - 1	1	360283-1	3-9 -14	1
28-52944-2	2-12-18 -	2		2-12-8 - 65	REF	360284-1	3-9 -	1
28VS3C2	2-12-12 - 25	1	321682-1-1	2-9-1 - 25	REF	360291-1	3-7 -	1
2935-04	2-3-6 - 52	12		2-9-8 - 17	3	360292-1	3-7 -24	1
2BREM4A	2-5-3 - 38	2	327	3-1 - 15	2	360293-1	3-7 -25	1
2BREMLH4A	2-5-3 - 42	2	3288000-5A	2-4-1 - 11	REF	360294-1	3-3 -	1
2D100B	2-6-2 -			2-4-7 - 1	1	360295-1	3-3 -19	1
	2-6-3 -			2-4-8 - 35	REF	360296-1	3-3 -20	1
2N2222A	2-13-2 - 97	3	3288000-6A	2-4-7 -	1	360297-1	3-3 -21	1
	2-13-4 - 56	1	3289000-1	2-4-1 - 22	REF	360297-2	3-3 -22	1
2N3823	2-13-2 - 96	1		2-4-9 - 39	REF	360298-1	3-3 -	1
2N4238	2-13-2 -132	1	3289000-4	2-8-12 - 13	1	360299-1	3-3 -18	1
2R2065-12	2-8-11 - 18	1	3289000-5	2-8-12 -	1	360300-1	3-3 -10	1
2R2065-14	2-8-11 - 25	1	3290000	2-4-1 - 17	REF	360303-1	3-3 -	1
2R2065-3	2-8-9 - 14	1		2-4-7 - 49	REF	360304	3-3 - 3	1
2R2065-5	2-8-9 - 31	1		2-4-8 - 31	REF	360308-1	2-17-1 - 1	1
2R2065-6	2-4-3 - 9	1	3290000-10	2-8-12 -	1	360309-1	3-3 - 4	2
3-1124-8-42-6	2-9-5 - 58	2	3290000-9	2-8-12 - 1	1	360310-1	3-7 -	1
3-1664-12-86-6	2-9-1 - 29	REF	3290012-3	2-8-3 -	1	360311-1	3-7 -	1
	2-9-5 - 65	REF	3290042-1	2-8-3 - 10	2	360312-1	3-4 -63	1
	2-10-1 - 1	1	3291000-15	2-8-1 - 2	REF	360312-2	3-4 -64	1
3-1664-14-60-6	2-9-5 - 13	1		2-8-3 - 1	1	360312-3	3-4 -65	1
3-1664-14-68-6	2-9-5 - 14	1	3291000-17	2-8-3 -		360312-4	3-4 -66	1
3-5618	2-3-13 - 40	1	3291000-7	2-4-1 - 9	REF	360313-1	3-4 -62	1
3-5COMP77-545	2-11-1	1	3292000-1	2-8-1 - 5	REF	360314-1	3-7 -21	1
	2-11-1 -	2		2-8-4 - 8	1	360315-1	3-7 -22	1
30-1591-1	2-12-7 -102	1		2-8-5 - 14	REF	360316-1	3-3 - 8	1
30-83059	2-14-1 -	1	3293000-1	2-7-1 - 26	REF	360318-1	3-1 -16	2
30050-15	2-9-1 - 22	REF		2-7-13 - 48	REF	360318-2	3-1 -13	2
	2-9-7 - 9	1		2-8-11 - 1	1	360338-1	3-3 - 5	1
	2-12-8 - 64	REF	3293019-1	2-8-11 - 4	2	360356-1	3-7 -23	1
3006P-1-104	2-13-2 -101	2	3294000-3	2-8-6 - 24	2	360357-1	3-3 - 6	1
30242-002	2-12-2 - 42	2	3294000-4	2-8-6 - 25	2	3605-16D	2-6-7 -15	1
	2-12-5 - 1	2	3294011-1	2-4-7 - 18	2	361-625-525S	2-11-1 - 3	4
30641-012	2-4-3 -	12		2-4-7 - 34	2	362-0377	2-8-9 - 1	1
	2-4-7 - 33	4	3294019-5	2-4-7 - 21	2		2-8-9 -18	1
	2-8-6 -	8	3295000-3	2-4-2 - 36	REF		2-8-9 -37	1
311826-1	2-6-13 - 1	2		2-4-3 - 17	1		2-12-8 -72	REF
	2-6-13 - 1	2	3295000-4	2-4-1 - 3	REF	366-63-462SH	2-9-7 -11	2
31236-10T-C11	2-14-2 - 10	1		2-4-3 - 16	1	370-403-00	2-3-8	1
315078-4	2-3-11 - 10	1		2-8-3 - 38	REF	370-403-00-1	2-3-8 -	1
	2-9-6 - 37	REF	3295014-1	2-4-7 - 20	1	375211-16	2-8-8 -12	1
316-12-8	2-12-18 - 10	2	3295014-2	2-4-7 -	1	377-28-2A	2-12-3 -10	1
316-13-8	2-6-6 - 53	2	3295018-1	2-4-7 - 14	1	392904-1	2-6-1 -37	REF
316-14-8	2-11-1 - 73	8	3295018-2	2-4-7 -	1		2-6-8 - 4	2
316-20-8	2-6-6 - 31	2	3296W-1-102	2-13-2 -119	4	397-16	2-5-6 -19	2
	2-6-6 - 37	1	3297000-1	2-4-7 - 31	2	397-40	2-5-5 - 3	1
316-3-6	2-11-1 - 30	21		2-8-12 - 80	REF	3995	2-14-7 -	1
316-4-8	2-8-4 - 54	2		2-8-12 - 80		400-200C	2-9-8 -	1
	2-8-4 - 56	2	33-6206-1	2-14-4 - 22	1	4000	2-14-7 -	1
	2-8-4 - 60	2		2-14-4 - 23	1	4002-5	2-3-4 -43	22
	2-8-4 - 64	2	33-6802-1	2-14-4 - 20	1	4002-5H	2-3-4 -	2
	2-8-4 - 68	1		2-14-4 - 29	1		2-3-4 -	2
	2-8-6 - 41	4	33-6810-1	2-12-8 - 18	1	4002-7	2-3-9 -16	6
	2-8-6 - 46	1		2-14-4 - 19	1	4002-9	2-3-9 -	
	2-8-6 - 55	4		2-14-4 - 28	1	4002G	2-1-4 -	14
	2-8-7 - 45	10		2-14-4 - 33	1		2-1-4 -	22
	2-8-13 - 19	2	3300-6	2-8-10 - 79	1		2-3-18 -	29
316-5-6	2-11-1 - 31	5	3300-8	2-8-10 - 81	1		2-3-18 -	20
316-5-8	2-7-10 - 35	8	3302-8	2-8-10 - 1	1		2-3-18 -	16
316-6-6	2-6-3 - 42	1	3302000-1	2-4-7 - 13	1		2-3-20 -	6
	2-6-4 - 35	3	3302000-2	2-4-7 -	1		2-12-16 -	4
316-6-8	2-8-4 - 59	1	3302017-1	2-4-7 - 15	2		2-14-2 -	4
	2-8-4 - 69	1	33645-1495	2-12-16 - 17	1	4002H	2-3-4 -	2
	2-8-7 - 15	1	340	2-12-3 -	1		2-3-4 -	2
	2-8-7 - 20	1	3518	2-6-3 - 48	1		2-3-4 -	32
	2-8-7 - 24	4	3591-4CN X 3/8	2-1-8 - 24	2		2-3-4 -	22
	2-8-7 - 27	8		2-6-5 - 2	12		2-3-4 -	17
	2-8-7 - 29	2	359770-1	3-9 - 5	1		2-3-4 -	17

PART NUMBER	FIG AND INDEX NO	QTY /AC
	2-3-9 -	6
	2-3-18 -	19
	2-3-18 -	17
4003	2-14-7 -	1
4005	2-14-7 -	1
40250	2-5-1 -27	REF
	2-7-10 -39	1
40252-2	2-7-1 -15	REF
	2-7-10 -19	1
	2-7-12 -17	REF
	2-7-13 -47	REF
40252-4	2-7-10 -25	1
40253	2-7-1 - 3	REF
	2-8-5 - 1	1
4026D4	2-16-3 -23	2
40276-2	2-3-11 -23	REF
	2-3-17 - 2	1
405-00216	2-6-5 -52	REF
405-00217	2-6-1 -26	REF
	2-6-5 -47	1
40G26-1	2-1-4 -	12
40G32-1A	2-1-4 -	12
40S5-2	2-3-18 -46	6
	2-3-18 -58	16
	2-3-20 -66	6
40S5-3	2-1-4 -63	14
	2-1-4 -70	22
	2-3-4 -38	32
	2-3-4 -45	17
	2-3-4 -53	17
	2-3-18 -18	19
	2-3-18 -27	17
	2-3-18 -41	29
	2-3-18 -47	11
	2-12-16 - 3	4
40S5-4	2-3-18 -48	3
40S5-5	2-14-2 -	4
40S56-4A	2-1-4 - 3	12
41-10015	2-1-2 -	2
41-10016	2-1-2 -	2
41-10018	2-1-2 -	2
41-10121-4	2-1-3 -47	2
41-10121-800	2-1-3 -	2
41-10164-2	2-1-4 -48	2
41-10164-3	2-1-4 -47	2
41-10173-2	2-1-4 - 4	2
41-10173-4	2-1-4 - 6	4
41-10173-6	2-1-4 -	2
41-10173-8	2-1-4 -	2
41-10519-2	2-4-10 - 8	2
41-12010	2-1-6 - 4	1
41-12010-1	2-1-6 -	1
41-12011-800	2-1-6 - 9	1
41-12011-801	2-1-6 -	1
41-12011-802	2-1-6 -	
41-12011-803	2-1-6 -	
41-14013-2	2-1-4 -44	4
41-22013-6	2-2-2 -	1
41-22013-8	2-2-2 -17	1
41-22013-950	2-2-2 -	
41-22013-952	2-2-2 -	
41-24012-2	2-7-17 -27	1
41-24012-3	2-7-17 -	1
41-24014-2	2-7-17 -18	2
41-24015	2-7-17 -19	2
41-24016	2-7-17 -26	2
41-24017	2-7-17 -44	2
41-24022	2-2-3 -51	REF
41-24022-18	2-7-17 -22	1
41-24022-19	2-7-17 -	1
41-24022-802	2-7-17 -	1
41-24022-803	2-7-17 -	1
41-24023	2-7-17 -25	2
41-24027-2	2-2-4 -12	1

PART NUMBER	FIG AND INDEX NO	QTY /AC
41-30079-10	2-3-20 -33	2
41-30079-12	2-3-20 -32	2
41-30081-10	2-3-19 -	1
41-30081-12	2-3-19 -	1
41-30081-14	2-3-19 -	1
41-30081-8	2-3-19 -	1
41-30097	2-3-8 -12	2
41-30102	2-3-8 -24	2
41-30122	2-3-8 - 4	1
41-30127	2-3-4 -26	4
41-30129	2-3-4 -27	4
41-31043	2-3-20 -79	4
41-322-003-10	3-1 -14	1
41-322-005-16	3-3 -	1
41-322-007-21	3-3 -16	1
41-322-008-26	3-3 -	2
41-322-015-7	3-1 -19	2
41-322-015-8	3-1 -18	1
41-322-015-9	3-1 -20	4
41-322-016-18	3-3 - 7	1
41-322-044-17	3-3 -28	2
41-322-044-18	3-3 -29	2
41-322-044-20	3-3 -31	2
41-322-044-21	3-3 -30	2
41-322-044-24	3-3 -	2
41-322-044-33	3-3 -	4
41-322-044-5	3-3 -27	1
41-323-002-1	3-6 -	1
41-323-002-51	3-6 -	18
41-323-002-52	3-6 -	36
41-323-003-11	3-6 -	1
41-323-005-1A	3-9 - 2	2
41-323-007-1	3-9 - 1	2
41-323-008-1	3-9 -13	1
41-323-009-1	3-9 -12	2
41-323-010-1	3-9 -11	1
41-323-012-18	2-17-1 -	1
41-323-012-6	2-17-1 - 2	1
41-323-014-7	3-7 -	1
41-323-015-13	3-6 -	1
41-323-016-1	3-9 -10	1
41-323-017-1	3-9 -	1
41-323-017-2	3-9 - 4	1
41-323-017-5	3-9 - 6	1
	3-9 -	1
41-323-018-1	3-9 - 3	1
41-323-036-1	3-9 - 9	1
41-332-003-6	3-7 -	1
41-332-004-6	3-7 -	1
41-332-012	3-7 -	1
41-332-032-17	3-4 -	2
41-333-001-10	3-8 -12	1
41-333-001-11	3-8 -14	1
41-333-001-12	3-8 -10	1
41-333-001-20	3-8 - 2	1
41-333-001-21	3-8 - 3	1
41-333-001-32	3-8 -17	2
41-333-001-8	3-8 - 9	1
41-333-002-4	2-17-1 -12	1
41-333-003-4	2-17-1 - 8	2
41-333-017-3	3-7 -27	1
41-333-018	2-17-1 -	2
41-333-15-4	2-16-3 -29	1
41-341-004-12	3-8 -25	2
41-341-004-13	3-8 -26	1
41-341-005-6	3-8 -21	1
41-341-034	3-5 -	REF
41-40515	2-16-3 -16	2
41-41512-800	2-16-2 -26	1
41-41512-801	2-16-2 -	1
41-50725	2-12-11 -21	1
41-50726	2-12-11 -23	1
41-50726-10	2-12-11 -	1
41-52014-802	2-12-9 -	NP

PART NUMBER	FIG AND INDEX NO	QTY /AC
41-55750-100	2-15-2 - 5	1
41-55750-12	2-15-2 - 8	1
41-55750-168	2-15-2 -	
41-55750-184	2-15-2 - 3	1
41-55750-188	2-15-2 - 4	1
41-55750-58	2-15-2 -17	2
41-55750-804	2-15-2 -	NP
41-55750-806	2-15-2 -	1
41-55851	2-15-2 - 6	1
41-61014-2	2-3-20 -81	1
41-75440-2	2-8-12 -48	4
41-75474-2	2-8-12 -72	2
41-85077	2-4-2 - 7	2
41-87015	2-1-3 -	2
41-87016	2-4-8 -17	2
	2-4-9 -21	2
41-87019	2-4-8 -13	4
	2-4-9 -	4
41-87020	2-4-8 -10	4
	2-4-9 -17	4
41-87021-4	2-4-8 -12	2
	2-4-9 -23	2
41-87022-4	2-4-9 -24	2
41-87023	2-4-9 -18	4
41-87023-2	2-4-8 -18	4
	2-4-9 -	4
41-87024	2-4-8 -14	2
	2-4-9 -19	2
41-87025	2-4-8 -15	2
	2-4-9 -20	2
41-87034-2	2-4-8 -26	2
41-87050	2-4-8 -28	4
	2-4-9 -37	4
41-87058-2	2-4-9 -34	2
41-87063	2-4-9 -35	4
41-87069	2-4-2 -	
41-87070	2-4-2 -	2
41-87070-2	2-4-1 -13	REF
	2-4-2 -21	2
41-87072	2-4-2 -	2
41-87072-2	2-4-2 -15	2
41-87073	2-4-2 -	2
41-87073-2	2-4-2 -22	2
41-87078	2-4-2 -37	REF
41-87078-16	2-4-7 -37	2
	2-4-11 -42	REF
41-87078-22	2-4-7 -	2
41-87078-800	2-4-7 -35	1
41-87078-801	2-4-7 -	1
41-87078-802	2-4-7 -	2
41-87078-804	2-4-7 -	2
41-87080	2-4-7 -40	2
41-87080-800	2-4-7 -	2
41-87081	2-4-7 -41	4
41-87094-2	2-4-11 -31	4
41-87094-6	2-4-11 -35	2
41-87098	2-4-11 -24	2
41-87099	2-4-11 -23	2
41-90364	2-7-4 -44	1
41-90530	2-7-5 -	2
41-90530-2	2-7-5 - 9	2
41-90531	2-7-5 -28	1
41-90532	2-7-5 -15	2
41-90533	2-7-5 -14	2
41-90534	2-7-5 -19	2
41-90904-212	2-12-23 -	1
41-96806	2-9-3 - 4	1
41-96809-800	2-9-3 - 1	1
4140-319-1	2-14-2 -46	1
4140-319-10	2-14-2 -53	1
4140-319-12	2-14-2 -55	1
4140-319-14	2-14-2 -60	1
4140-319-15	2-14-2 -61	1
4140-319-2	2-14-2 -47	2

PART NUMBER	FIG AND INDEX NO	QTY /AC
4140-319-4	2-14-2 -48	1
4140-319-6	2-14-2 -49	1
4140-319-7	2-14-2 -50	1
4140-319-8	2-14-2 -51	1
4140-319-9	2-14-2 -52	1
41531	2-12-3 - 8	1
41A-00001	1-1 -	1
41A-00010-89	2-16-4 -70	2
41A-00010-90	2-16-4 -69	2
41A-10000-814	2-1-1 -	1
41A-10000-817	2-1-1 -	1
41A-10000-818	1-1 - 1	REF
41A-10002-18	2-1-2 -	2
41A-10002-42	2-1-2 -	AR
41A-10002-44	2-1-2 -	AR
41A-10002-46	2-1-2 -	AR
41A-10002-48	2-1-2 -	AR
41A-10002-50	2-1-2 -	AR
41A-10002-52	2-1-2 -	AR
41A-10002-812	2-1-1 - 1	REF
	2-1-2 -	1
41A-10002-815	2-1-2 -	1
41A-10002-816	2-1-2 -	
41A-10002-817	2-1-2 -	
41A-10003-100	2-1-3 -	4
41A-10003-122	2-1-3 -	4
41A-10003-124	2-1-3 -	4
41A-10003-810	2-1-2 - 1	REF
	2-1-3 -	1
41A-10003-811	2-1-3 -	1
41A-10003-812	2-1-3 -	
41A-10003-813	2-1-3 -	
41A-10003-90	2-1-3 -	4
41A-10003-953	2-1-4 -22	8
41A-10004	2-1-3 -	1
41A-10004-14	2-1-3 -11	2
41A-10004-48	2-1-3 -	2
41A-10004-49	2-1-3 -10	2
41A-10004-72	2-1-3 - 4	1
41A-10004-73	2-1-3 -	1
41A-10004-74	2-1-3 - 5	1
41A-10004-75	2-1-3 -	1
41A-10004-76	2-1-3 - 6	1
41A-10004-77	2-1-3 -	1
41A-10004-78	2-1-3 - 7	1
41A-10004-79	2-1-3 -	1
41A-10004-80	2-1-3 - 8	1
41A-10004-801	2-1-3 -	1
41A-10004-81	2-1-3 -	1
41A-10004-82	2-1-3 - 9	1
41A-10004-83	2-1-3 -	1
41A-10005	2-1-3 -	1
41A-10005-1	2-1-3 -	1
41A-10005-28	2-1-3 -	1
41A-10005-29	2-1-3 -	1
41A-10005-34	2-1-3 -25	1
41A-10005-35	2-1-3 -	1
41A-10005-36	2-1-3 -26	1
41A-10005-37	2-1-3 -	1
41A-10005-38	2-1-3 -27	1
41A-10005-39	2-1-3 -	1
41A-10005-40	2-1-3 -22	4
41A-10005-42	2-1-3 -23	4
41A-10005-46	2-1-3 -14	1
41A-10005-47	2-1-3 -	1
41A-10005-72	2-1-3 -15	2
41A-10005-74	2-1-3 -16	AR
41A-10005-78	2-1-3 -24	2
41A-10006-102	2-1-3 -	1
41A-10006-103	2-1-3 -	1
41A-10006-54	2-1-3 -33	8
41A-10007	2-1-3 - 1	REF
	2-1-4 -	1
41A-10007-1	2-1-4 -	1

PART NUMBER	FIG AND INDEX NO	QTY /AC
41A-10007-26	2-1-4 -	1
41A-10007-27	2-1-4 -	1
41A-10008	2-1-3 -	REF
	2-1-4 -	1
	2-8-12 -	REF
41A-10008-1	2-1-4 -	1
	2-8-12 -	REF
41A-10009	2-1-3 - 2	REF
	2-1-4 -	1
41A-10009-1	2-1-4 -	1
41A-10009-104	2-1-4 -73	2
41A-10009-105	2-1-4 -72	2
41A-10009-106	2-1-4 -65	2
41A-10009-118	2-1-4 -38	4
	2-1-4 -59	4
41A-10009-154	2-1-4 -69	1
41A-10009-155	2-1-4 -	1
41A-10009-2	2-1-4 -	1
41A-10009-3	2-1-4 -	1
41A-10009-4	2-1-4 -	1
41A-10009-5	2-1-4 -	1
41A-10009-952	2-1-4 -	AR
41A-10010-1	2-1-5 -	NP
41A-10010-100	2-1-5 -27	1
41A-10010-101	2-1-5 -	1
41A-10010-102	2-1-5 -24	1
41A-10010-103	2-1-5 -	1
41A-10010-118	2-1-5 - 1	1
41A-10010-119	2-1-5 -	1
41A-10010-140	2-1-5 - 2	1
41A-10010-141	2-1-5 -	1
41A-10010-142	2-1-5 - 9	1
41A-10010-143	2-1-5 -	1
41A-10010-144	2-1-5 -11	1
41A-10010-145	2-1-5 -	1
41A-10010-156	2-1-5 - 6	1
41A-10010-158	2-1-5 - 7	1
41A-10010-182	2-1-5 -21	1
41A-10010-183	2-1-5 -	1
41A-10010-184	2-1-5 -	1
41A-10010-185	2-1-5 -	1
41A-10010-2	2-1-5 -32	1
41A-10010-3	2-1-5 -	1
41A-10010-4	2-1-5 -33	1
41A-10010-5	2-1-5 -	1
41A-10010-80	2-1-5 - 8	1
41A-10010-800	2-1-3 - 3	REF
	2-1-5 -	NP
41A-10010-81	2-1-5 -	1
41A-10010-83	2-1-5 -	1
41A-10010-84	2-1-5 - 3	1
41A-10010-85	2-1-5 -	1
41A-10010-86	2-1-5 -16	1
41A-10010-87	2-1-5 -	1
41A-10010-88	2-1-5 -13	1
41A-10010-89	2-1-5 -	1
41A-10010-90	2-1-5 -25	1
41A-10010-91	2-1-5 -	1
41A-10010-92	2-1-5 -20	1
41A-10010-93	2-1-5 -	1
41A-10010-94	2-1-5 -22	1
41A-10010-95	2-1-5 -	1
41A-10010-96	2-1-5 -19	1
41A-10010-97	2-1-5 -	1
41A-10010-98	2-1-5 -23	2
41A-10010-99	2-1-5 -26	2
41A-10024-6	2-1-4 - 2	1
41A-10024-7	2-1-4 -	1
41A-10026-2	2-1-3 -44	2
41A-10026-4	2-1-3 -45	2
41A-10027	2-1-3 -	2
41A-10027-2	2-1-3 -39	2
41A-10028	2-1-3 -34	2
41A-10029	2-1-3 -31	2

PART NUMBER	FIG AND INDEX NO	QTY /AC
41A-10030-4	2-3-6 -58	4
41A-10035-4	2-1-3 -	1
41A-10035-5	2-1-3 -	1
41A-10038	2-1-3 -	1
41A-10038-1	2-1-3 -	1
41A-10039-58	2-1-3 -43	1
41A-10039-59	2-1-3 -	1
41A-10039-800	2-1-3 -	1
41A-10039-803	2-1-3 -	1
41A-10040-2	2-1-3 -	1
41A-10040-3	2-1-3 -	1
41A-10045	2-1-3 -41	4
	2-4-10 -21	REF
41A-10046	2-1-3 -	1
41A-10046-1	2-1-3 -	1
41A-10046-2	2-1-3 -19	1
41A-10046-3	2-1-3 -	1
41A-10047-16	2-1-4 -26	2
41A-10047-18	2-1-4 -27	2
41A-10048-20	2-1-4 -	4
	2-1-4 -	4
41A-10048-4	2-1-4 -31	4
41A-10048-6	2-1-4 -	2
41A-10048-8	2-1-4 -	4
41A-10048-800	2-1-4 -32	2
41A-10049-20	2-1-3 -51	2
41A-10054	2-1-3 -	1
41A-10054-1	2-1-3 -	1
41A-10054-2	2-1-3 -49	1
41A-10054-3	2-1-3 -	1
41A-10057	2-1-4 -	2
41A-10058-6	2-1-4 -	2
	2-7-14 -25	REF
41A-10061-102	2-1-4 -66	1
41A-10061-103	2-1-4 -	1
41A-10061-104	2-1-4 -74	1
41A-10061-105	2-1-4 -	1
41A-10061-106	2-1-4 -77	1
41A-10061-107	2-1-4 -	1
41A-10061-108	2-1-4 -71	1
41A-10061-109	2-1-4 -	1
41A-10061-110	2-1-4 -64	1
41A-10061-111	2-1-4 -	1
41A-10061-124	2-1-4 -67	1
41A-10061-125	2-1-4 -	1
41A-10061-126	2-1-4 -	1
41A-10061-127	2-1-4 -75	1
41A-10061-128	2-1-4 -	1
41A-10061-129	2-1-4 -55	1
41A-10061-26	2-1-4 -62	1
41A-10061-27	2-1-4 -	1
41A-10061-52	2-1-4 -50	1
41A-10061-53	2-1-4 -	1
41A-10061-56	2-1-4 -49	1
41A-10061-57	2-1-4 -	1
41A-10062	2-1-3 -	1
41A-10062-1	2-1-3 -	1
41A-10062-2	2-1-3 -61	1
41A-10062-3	2-1-3 -	1
41A-10063-2	2-1-4 -57	2
41A-10063-8	2-1-4 -35	2
41A-10064	2-1-3 -59	2
41A-10068	2-1-4 -33	4
41A-10068-1	2-1-4 -34	4
41A-10070	2-1-8 -	4
41A-10071	2-1-4 -53	2
	2-8-13 -21	REF
41A-10072	2-1-4 -40	2
41A-10072-1	2-1-4 -41	2
41A-10073	2-1-4 -	2
41A-10074	2-1-4 -45	4
41A-10080	2-1-2 -	2
41A-10081	2-1-2 - 6	2
41A-10082	2-1-2 - 7	2

PART NUMBER	FIG AND INDEX NO	QTY /AC
41A-10083	2-1-2 - 8	2
41A-10085	2-1-3 -42	1
41A-10085-1	2-1-3 -	1
41A-10085-2	2-1-3 -	
41A-10085-3	2-1-3 -	
41A-10500	2-4-1 -25	REF
	2-4-10 -	1
41A-10500-1	2-4-10 -	1
41A-10500-2	2-4-10 -15	1
41A-10500-3	2-4-10 -	1
41A-10500-4	2-4-10 -	4
41A-10500-6	2-4-10 -	4
41A-10500-8	2-4-10 -	4
41A-10501	2-4-10 - 1	1
41A-10501-1	2-4-10 -	1
41A-10510	2-4-10 - 2	2
41A-10511	2-4-10 - 3	2
41A-10512	2-4-2 -33	REF
	2-4-9 -45	REF
	2-4-10 - 5	2
41A-10513	2-4-10 - 7	2
41A-10514	2-4-10 -	2
41A-10514-2	2-4-10 -	2
41A-10514-4	2-4-10 -10	2
41A-10514-6	2-4-10 -	2
41A-10520	2-1-1 - 6	REF
	2-4-10 -	1
41A-10520-1	2-4-10 -	1
41A-10550-10	2-4-11 -10	2
41A-10550-12	2-4-11 -11	2
41A-10550-14	2-4-11 - 4	1
41A-10550-15	2-4-11 -	1
41A-10550-16	2-4-11 -	2
41A-10550-44	2-4-11 - 1	1
41A-10550-45	2-4-11 -	1
41A-10550-46	2-4-11 - 2	1
41A-10550-47	2-4-11 -	1
41A-10550-58	2-4-11 -	1
41A-10550-59	2-4-11 -	
41A-10550-8	2-4-11 - 3	1
41A-10550-802	2-4-1 -26	REF
41A-10550-804	2-1-1 - 7	REF
41A-10550-806	2-4-11 -	NP
41A-10550-807	2-4-11 -	NP
41A-10550-9	2-4-11 -	1
41A-10550-952	2-4-11 -	AR
41A-10551-10	2-4-11 -	2
41A-10551-12	2-4-11 -17	2
41A-10553-2	2-4-11 -12	2
41A-10553-4	2-4-11 -13	2
41A-10553-6	2-4-11 -	2
41A-10555-16	2-4-11 - 8	2
41A-10555-18	2-4-11 - 5	2
41A-10555-8	2-4-11 - 9	2
41A-10555-804	2-4-11 -	2
41A-10559-2	2-4-11 -18	2
41A-10560	2-4-11 -20	1
41A-11000	2-1-1 - 3	REF
	2-1-6 -	1
	2-12-23 -	REF
41A-11000-1	2-1-6 -	1
41A-11002	2-1-6 -	1
41A-11002-1	2-1-6 -	1
41A-11002-2	2-1-6 -34	1
41A-11002-3	2-1-6 -	1
41A-11010	2-1-6 -35	1
41A-11010-1	2-1-6 -	1
41A-11011	2-15-2 -12	1
41A-12100	2-1-1 - 2	REF
	2-1-6 -	1
41A-12100-10	2-1-6 -19	1
41A-12100-11	2-1-6 -	1
41A-12100-140	2-1-6 - 7	1
41A-12100-141	2-1-6 -	1

PART NUMBER	FIG AND INDEX NO	QTY /AC
41A-12100-150	2-1-6 -25	8
41A-12100-158	2-1-6 -17	2
41A-12100-159	2-1-6 -18	2
41A-12100-16	2-1-6 - 1	1
41A-12100-164	2-1-6 -15	2
41A-12100-165	2-1-6 -16	2
41A-12100-17	2-1-6 -	1
41A-12100-174	2-1-6 - 5	4
41A-12100-2	2-1-6 -	1
41A-12100-201	2-1-6 -27	1
41A-12100-216	2-1-6 -	1
41A-12100-218	2-1-6 -23	1
41A-12100-4	2-1-6 -	1
41A-12100-5	2-1-6 -	1
41A-12100-6	2-1-6 -	1
41A-12100-7	2-1-6 -	1
41A-12100-8	2-1-6 -20	1
41A-12100-801	2-1-6 -	1
41A-12100-803	2-1-6 -	1
41A-12100-9	2-1-6 -	1
41A-12102	2-1-6 -	
41A-12102-1	2-1-6 -	
41A-13101-46	2-1-8 -	1
41A-13101-50	2-1-8 -	1
41A-13101-812	2-1-1 - 5	REF
	2-1-8 -	1
41A-13101-814	2-1-8 -	1
41A-13102	2-7-9 -45	REF
41A-13102-14	2-1-8 -27	1
41A-13102-15	2-1-8 -	1
41A-13102-250	2-1-8 -15	2
41A-13102-252	2-1-8 -67	2
41A-13102-254	2-1-8 -23	1
41A-13102-268	2-1-8 -16	1
41A-13102-269	2-1-8 -	1
41A-13102-270	2-1-8 -28	1
41A-13102-271	2-1-8 -	1
41A-13102-272	2-1-8 -17	1
41A-13102-424	2-1-8 -31	2
41A-13102-425	2-1-8 -32	2
41A-13102-434	2-1-8 -37	1
41A-13102-435	2-1-8 -39	1
41A-13102-436	2-1-8 -43	1
41A-13102-437	2-1-8 -	1
41A-13102-440	2-1-8 -58	1
41A-13102-441	2-1-8 -	1
41A-13102-450	2-1-8 -	1
41A-13102-452	2-1-8 -	1
41A-13102-454	2-1-8 -	1
41A-13102-456	2-1-8 -50	AR
41A-13102-458	2-1-8 -53	AR
41A-13102-460	2-1-8 -55	AR
41A-13102-527	2-1-8 -54	1
41A-13102-569	2-1-8 -56	1
41A-13102-570	2-1-8 -59	2
41A-13102-576	2-1-8 -60	2
41A-13102-577	2-1-8 -52	1
41A-13102-578	2-1-8 -62	2
41A-13102-580	2-1-8 -61	2
41A-13102-586	2-1-8 -51	2
41A-13102-598	2-1-8 -	1
41A-13102-616	2-1-8 -22	1
41A-13102-802	2-1-8 -	1
41A-13102-804	2-1-8 -	1
41A-13103	2-7-9 -46	REF
41A-13103-70	2-1-9 - 1	1
41A-13103-71	2-1-9 -	1
41A-13103-78	2-1-9 - 6	2
41A-13103-80	2-1-9 - 5	2
41A-13103-802	2-1-8 - 2	REF
	2-1-9 -	1
41A-13103-803	2-1-9 -	1
41A-13104	2-1-8 - 1	REF
	2-1-9 -	1

PART NUMBER	FIG AND INDEX NO	QTY /AC
	2-7-9 -47	REF
41A-13104-2	2-1-9 -	1
41A-13104-22	2-1-9 -13	1
41A-13104-24	2-1-9 -	1
41A-13104-26	2-1-9 -14	AR
41A-13104-28	2-1-9 -	AR
41A-13104-4	2-1-9 -12	1
41A-13104-46	2-1-9 -	1
41A-13104-6	2-1-9 -	1
41A-13104-800	2-1-9 -	1
41A-13121-8	2-1-8 - 8	2
41A-13121-800	2-1-8 -	2
41A-13123-8	2-1-8 -13	2
41A-13123-800	2-1-8 -	2
41A-13131	2-1-9 -	1
41A-13132	2-1-9 -16	1
41A-13134	2-1-9 -	2
41A-13134-2	2-1-9 - 2	2
41A-13135	2-1-8 -10	2
41A-13138-2	2-1-8 -45	1
41A-13138-3	2-1-8 -	1
41A-13138-4	2-1-8 -46	1
41A-13138-5	2-1-8 -	1
41A-13138-6	2-1-8 -47	1
41A-13138-7	2-1-8 -	1
41A-13140-2	2-1-8 -70	2
41A-13140-4	2-1-8 -69	2
41A-14000-800	2-1-1 - 4	REF
	2-1-7 -	1
41A-14000-801	2-1-7 -	1
41A-14002	2-1-7 - 1	1
41A-14002-1	2-1-7 -	1
41A-14002-10	2-1-7 -	4
41A-14002-110	2-1-7 - 4	2
41A-14002-12	2-1-7 -	2
41A-14002-146	2-1-7 -14	10
41A-14002-170	2-1-7 - 2	1
41A-14002-171	2-1-7 -	1
41A-14002-238	2-1-7 -15	2
41A-14002-84	2-1-7 - 7	4
41A-14013	2-1-7 -13	1
41A-20000	1-1 - 3	REF
	2-2-1 -	NP
41A-20004	2-2-1 -16	REF
	2-2-4 -	NP
41A-20004-112	2-2-4 -	1
41A-20004-113	2-2-4 -31	1
41A-20004-13	2-2-2 -30	REF
	2-2-4 -	1
41A-20004-14	2-2-4 -	1
41A-20004-2	2-2-4 -50	1
41A-20004-27	2-2-4 -	1
41A-20004-28	2-2-4 -26	1
41A-20004-32	2-2-4 -52	4
41A-20004-6	2-2-4 -34	1
41A-20004-60	2-2-4 -45	1
41A-20004-62	2-2-4 -	1
41A-20004-64	2-2-4 -	1
41A-20004-66	2-2-4 -44	1
41A-20004-8	2-2-4 -49	1
41A-20004-804	2-2-4 -	1
41A-20004-806	2-2-4 -	1
41A-20004-808	2-2-4 -	1
41A-20004-809	2-2-4 -	1
41A-20004-82	2-2-4 -28	1
41A-20004-83	2-2-4 -	1
41A-20005-10	2-2-4 -38	2
41A-20005-12	2-2-4 -39	2
41A-20005-30	2-2-4 -40	2
41A-20005-46	2-2-4 -42	1
	2-7-17 -46	REF
41A-20005-47	2-2-4 -	1
41A-20005-48	2-2-4 -	1
41A-20005-50	2-2-4 -43	2

PART NUMBER	FIG AND INDEX NO	QTY /AC
41A-20005-800	2-2-4 -	1
41A-21000	2-2-1 -17	REF
	2-2-2 -	1
	2-3-20 - 9	REF
41A-21000-10	2-2-2 - 8	1
41A-21000-11	2-2-2 -	1
41A-21000-2	2-2-2 - 5	1
41A-21000-4	2-2-2 - 6	1
41A-21000-6	2-2-2 - 7	1
41A-21001-4	2-2-2 -	1
41A-21014	2-2-1 -11	1
41A-21021	2-2-2 -	1
41A-21021-2	2-2-2 - 1	1
41A-21023	2-2-1 -18	REF
	2-2-2 -	1
41A-21023-4	2-2-2 - 3	1
41A-22000	2-2-1 - 1	REF
41A-22000-145	2-2-2 -27	1
41A-22000-800	2-2-2 -	1
41A-22000-804	2-2-2	
41A-22000-85	2-2-1 - 6	1
41A-22000-86	2-2-1 -	1
41A-22021	2-2-1 -	1
	2-2-2 -29	REF
41A-22021-2	2-2-1 - 2	1
41A-22021-950	2-2-1 -	
41A-22021-952	2-2-1 -	1
41A-22022	2-2-2 -	1
41A-22022-2	2-2-2 -13	1
41A-22022-950	2-2-2 -	
41A-22026	2-2-2 -20	1
41A-22029	2-2-2 -22	1
41A-22030	2-2-2 -24	AR
41A-22031	2-2-2 -	3
41A-23000-2	2-2-3 -	1
41A-23000-802	2-2-1 - 8	REF
	2-2-3 -	1
41A-23000-802/B	2-2-1 -	
	2-2-3 -	
41A-23000-804	2-2-3 -	1
41A-23014	2-2-3 - 5	2
41A-23019	2-2-3 - 6	2
41A-23021-2	2-2-3 -13	2
	2-7-17 -47	REF
41A-23022	2-2-1 -19	REF
	2-2-3 -	1
41A-23022-1	2-2-3 -	1
41A-23022-12	2-2-3 - 3	2
41A-23022-2	2-2-3 - 1	1
41A-23022-3	2-2-3 -	1
41A-23023	2-2-3 -17	2
41A-23026	2-2-3 -16	2
41A-23027	2-2-3 -14	1
41A-23028-30	2-2-3 - 7	1
	2-2-3 -	1
41A-23028-31	2-2-3 -	1
	2-2-3 -11	1
41A-23028-32	2-2-3 -	4
41A-23028-40	2-2-3 - 8	1
	2-2-3 -	1
41A-23028-41	2-2-3 -	1
	2-2-3 -12	1
41A-23033	2-2-3 -18	2
41A-23034	2-2-3 -19	2
41A-24000	2-2-4 -	REF
41A-24000-118	2-2-3 -23	1
41A-24000-119	2-2-3 -	1
41A-24000-142	2-2-3 -29	1
41A-24000-144	2-2-3 -30	1
41A-24000-148	2-2-4 -	2
41A-24000-236	2-2-3 -24	1
41A-24000-237	2-2-3 -	1
41A-24000-282	2-2-4 -	2
41A-24000-283	2-2-4 -	1

PART NUMBER	FIG AND INDEX NO	QTY /AC
41A-24000-284	2-2-4 -	1
41A-24000-300	2-2-3 -26	1
41A-24000-302	2-2-3 -27	1
41A-24000-314	2-2-3 -	AR
41A-24000-316	2-2-3 -	AR
41A-24000-318	2-2-4 -	1
41A-24000-4	2-2-3 -40	1
41A-24000-800	2-2-3 -	1
41A-24000-801	2-2-3 -	1
41A-24000-94	2-2-3 -42	1
41A-24000-95	2-2-3 -	1
41A-24000-96	2-2-3 -41	1
41A-24000-98	2-2-3 -	1
41A-24001	2-2-1 -15	REF
	2-2-3 -	NP
	2-7-17 -	REF
41A-24001-18	2-7-17 -32	2
41A-24001-56	2-7-17 -40	1
41A-24002	2-2-3 -20	REF
	2-2-4 -	1
	2-7-18 -24	REF
41A-24002-1	2-2-4 -	1
41A-24002-14	2-2-4 -21	1
41A-24002-15	2-2-4 -22	1
41A-24005-801	2-2-3 -	1
41A-24005-802	2-2-3 -	1
41A-24021	2-7-17 -16	2
41A-24023	2-2-3 -31	1
41A-24027	2-7-17 -15	2
41A-24028	2-2-3 -	REF
41A-24028-800	2-7-17 -	1
41A-24028-801	2-7-17 -	1
41A-24029	2-2-3 -33	1
41A-24029-2	2-2-3 -	1
41A-24030	2-2-3 -36	2
41A-24031	2-2-3 -	2
41A-24031-2	2-2-3 -34	2
41A-24032	2-2-3 -	2
41A-24032-2	2-2-3 -37	2
41A-24037	2-2-4 -24	1
41A-24038	2-2-4 -25	1
41A-24040-16	2-2-4 - 3	1
41A-24040-18	2-2-4 -15	2
41A-24040-20	2-2-4 - 9	1
41A-24040-22	2-2-4 - 1	AR
41A-24040-24	2-2-4 - 2	AR
41A-24040-26	2-2-4 - 7	AR
41A-24040-28	2-2-4 - 8	AR
41A-24040-30	2-2-4 -14	AR
41A-24040-8	2-2-4 -18	2
41A-26000-2	2-6-10 -31	1
41A-26000-4	2-6-10 -	1
41A-27305-3	2-6-10 -33	2
41A-27305-5	2-6-10 -34	2
41A-30030-2	2-13-2 -	1
41A-30055	2-3-7 -16	1
	2-3-7 -20	1
41A-30055-1	2-3-7 -	1
	2-3-7 -	1
41A-30056	2-3-7 -15	2
	2-3-7 -17	2
	2-3-7 -19	2
41A-30057	2-3-7 -66	6
41A-30057-2	2-3-7 -	6
41A-30057-4	2-3-7 -	6
41A-30058	2-3-7 -65	6
41A-30059	2-3-7 -67	6
41A-30061	2-3-7 -18	1
41A-30061-1	2-3-7 -	1
41A-30062	2-3-10 -90	1
	2-9-6 -36	REF
41A-30086	2-3-8 -16	1
41A-30086-1	2-3-8 -	1
41A-30091	2-3-10 -52	1

PART NUMBER	FIG AND INDEX NO	QTY /AC
41A-30091-1	2-3-10 -	1
41A-30095	2-3-8 - 13	2
41A-30096	2-3-8 - 11	2
41A-30099	2-3-8 - 17	2
41A-30114	2-3-10 - 54	2
41A-30114-1	2-3-10 -	2
41A-30124	2-3-4 -	1
41A-30124-1	2-3-4 -	1
41A-30124-2	2-3-4 - 22	1
41A-30124-3	2-3-4 -	1
41A-30125	2-3-4 -	1
41A-30125-1	2-3-4 -	1
41A-30125-2	2-3-4 - 21	1
41A-30125-3	2-3-4 -	1
41A-30126	2-3-4 -	2
41A-30126-2	2-3-4 - 3	2
41A-30126-4	2-3-4 - 6	2
41A-30126-6	2-3-4 - 4	2
41A-30132	2-3-4 - 17	4
41A-30173	2-3-10 - 1	2
41A-30174	2-3-10 - 98	1
41A-30174-1	2-3-10 -	1
41A-30203	2-3-8 - 42	1
41A-30203-1	2-3-8 -	1
41A-35001	1-1 - 4	REF
	2-3-1 -	1
41A-35002	2-3-1 - 1	REF
	2-3-2 -	1
41A-35002-950	2-3-2 -	AR
41A-35003	2-3-2 - 1	REF
	2-3-3 -	1
41A-35003-160	2-3-3 - 32	2
41A-35003-212	2-3-3 - 26	2
41A-35003-42	2-3-3 - 27	1
41A-35003-43	2-3-3 -	1
41A-35004	2-3-2 - 2	REF
	2-3-5 -	NP
	2-3-6 -	REF
	2-12-22 -	REF
41A-35005-10	2-3-10 - 86	1
41A-35005-106	2-3-10 -	1
41A-35005-107	2-3-10 -	1
41A-35005-108	2-3-10 -	4
41A-35005-112	2-3-10 - 91	4
41A-35005-114	2-3-10 - 81	2
41A-35005-116	2-3-10 - 92	2
41A-35005-12	2-3-10 - 73	1
41A-35005-13	2-3-10 -	1
41A-35005-14	2-3-10 -	1
41A-35005-15	2-3-10 -	1
41A-35005-16	2-3-10 -	1
41A-35005-2	2-3-10 - 72	1
41A-35005-20	2-3-10 -	1
41A-35005-22	2-3-10 - 82	1
41A-35005-23	2-3-10 -	1
41A-35005-24	2-3-10 -	2
41A-35005-3	2-3-10 -	1
41A-35005-34	2-3-10 - 68	1
41A-35005-36	2-3-10 - 80	2
41A-35005-38	2-3-10 - 76	1
41A-35005-39	2-3-10 -	1
41A-35005-4	2-3-10 - 67	1
41A-35005-44	2-3-10 -	1
41A-35005-45	2-3-10 -	1
41A-35005-52	2-3-10 - 95	1
41A-35005-53	2-3-10 -	1
41A-35005-54	2-3-10 -	1
41A-35005-55	2-3-10 -	1
41A-35005-56	2-3-10 -100	1
41A-35005-57	2-3-10 -	1
41A-35005-58	2-3-10 -	AR
41A-35005-6	2-3-10 - 84	1
41A-35005-60	2-3-10 - 96	1
41A-35005-61	2-3-10 -	1

PART NUMBER	FIG AND INDEX NO	QTY /AC
41A-35005-8	2-3-10 -87	1
41A-35005-80	2-3-10 -	1
41A-35005-81	2-3-10 -	1
41A-35005-814	2-3-2 - 4	REF
	2-3-10 -	1
41A-35006	2-10-1 -	REF
41A-35006-4	2-3-8	1
41A-35006-5	2-3-8 -	1
41A-35006-6	2-3-8	1
41A-35006-7	2-3-8 -	1
41A-35006-8	2-3-8	1
41A-35007	2-3-2 - 3	REF
	2-3-7 -	NP
	2-3-8 -	REF
41A-35007-234	2-3-8 - 8	1
41A-35007-248	2-3-8 -	1
41A-35007-249	2-3-8 -	1
41A-35007-270	2-3-8 -	1
41A-35007-292	2-3-8 -	1
41A-35007-294	2-3-8 -	1
41A-35007-296	2-3-8 -	1
41A-35007-310	2-3-8 -15	AR
41A-35007-38	2-3-8 -27	1
41A-35007-39	2-3-8 -	1
41A-35007-42	2-3-8 -	1
	2-3-17 -30	REF
41A-35007-44	2-3-8 - 2	1
41A-35007-46	2-3-8 - 3	1
41A-35007-52	2-3-8 -	2
41A-35007-54	2-3-8 -	1
41A-35009	2-3-2 -	NP
41A-35009-1	2-3-2 -	NP
41A-35010	2-3-2 -	NP
41A-35010-12	2-3-2 -48	1
41A-35020	2-3-7 -	NP
41A-35020-10	2-3-7 -42	1
41A-35020-106	2-3-7 -51	1
41A-35020-107	2-3-7 -51	1
41A-35020-108	2-3-7 -50	1
41A-35020-109	2-3-7 -50	1
41A-35020-11	2-3-7 -	1
41A-35020-12	2-3-7 -43	1
41A-35020-13	2-3-7 -	1
41A-35020-14	2-3-7 -44	1
41A-35020-16	2-3-7 -	1
41A-35020-22	2-3-7 -40	1
41A-35020-8	2-3-7 -41	1
41A-35020-88	2-3-7 -46	1
41A-35020-9	2-3-7 -	1
41A-35022	2-3-3 -	1
41A-35022-14	2-3-3 -10	1
41A-35023	2-3-3 -	1
41A-35023-12	2-3-3 -12	1
41A-35023-13	2-3-3 -	1
41A-35023-14	2-3-3 -14	2
41A-35023-16	2-3-3 -13	2
41A-35024-2	2-3-3 -	1
41A-35024-3	2-3-3 -	1
41A-35024-800	2-3-3 -17	1
41A-35024-801	2-3-3 -	1
41A-35029	2-3-7 -	1
41A-35029-170	2-3-7 -	2
41A-35029-172	2-3-7 -10	2
41A-35029-4	2-3-7 -	1
41A-35029-98	2-3-7 - 7	1
41A-35031	2-3-5 - 2	REF
	2-3-10 -	NP
41A-35031-102	2-3-10 -17	2
	2-3-18 -51	REF
41A-35031-106	2-3-10 -19	1
	2-3-18 -52	REF
41A-35031-120	2-3-10 -28	1
41A-35031-121	2-3-10 -	1
41A-35031-122	2-3-10 -29	1
41A-35031-124	2-3-10 -25	1
41A-35031-126	2-3-10 -30	1
41A-35031-128	2-3-10 -	1
	2-3-18 -55	REF
41A-35031-2	2-3-10 - 7	1
41A-35031-30	2-3-10 -31	1
	2-3-18 -56	REF
41A-35031-32	2-3-10 -24	1
41A-35031-34	2-3-10 -10	1
41A-35031-36	2-3-10 -21	1
	2-3-18 -54	REF
41A-35031-40	2-3-10 -	1
	2-3-18 -50	REF
41A-35031-950	2-3-10 - 4	1
41A-35037	2-3-7 -	NP
	2-3-14 -18	REF
	2-12-16 -	REF
41A-35037-2	2-3-7 -	1
	2-12-9 -	REF
41A-35037-20	2-3-7 -21	1
41A-35037-200	2-12-9 -24	1
41A-35037-202	2-12-9 -23	1
41A-35037-220	2-12-16 -27	1
41A-35037-222	2-12-16 -28	1
41A-35037-228	2-3-7 -23	2
41A-35037-232	2-3-7 -	2
41A-35037-236	2-3-7 -24	2
41A-35037-4	2-3-7 -	1
	2-12-16 -	REF
41A-35041	2-3-5 -	1
41A-35044	2-3-6 -	1
41A-35044-114	2-3-6 -49	1
41A-35044-115	2-3-6 -	1
41A-35044-60	2-3-6 -53	1
41A-35046	2-3-6 -	NP
41A-35046-130	2-3-6 -63	1
41A-35046-132	2-3-6 -61	2
41A-35046-134	2-3-6 -62	2
41A-35047	2-3-6 -	NP
41A-35052	2-3-5 -30	1
41A-35052-1	2-3-5 -	1
41A-35053	2-3-10 - 5	1
41A-35053-1	2-3-10 -	1
41A-35054	2-3-6 -	NP
41A-35054-2	2-3-6 -	1
41A-35054-3	2-3-6 -	1
41A-35054-78	2-3-6 -	1
41A-35054-80	2-3-6 -17	1
41A-35055	2-3-10 -	1
41A-35055-116	2-3-10 -	1
	2-3-13 -46	REF
41A-35055-128	2-3-10 - 3	1
41A-35055-146	2-3-10 -	1
41A-35055-188	2-3-13 -47	1
41A-35055-74	2-3-10 - 2	1
41A-35056-40	2-3-10 -65	4
41A-35056-802	2-3-10 -63	1
41A-35056-803	2-3-10 -64	1
41A-35057	2-3-6 -67	1
41A-35057-1	2-3-6 -	1
41A-35059	2-3-6 -	NP
41A-35059-42	2-3-6 -26	2
41A-35059-50	2-3-6 -28	2
41A-35060	2-3-6 -	NP
41A-35060-6	2-3-6 -34	1
41A-35060-7	2-3-6 -	1
41A-35061	2-3-6 -	NP
41A-35061-22	2-3-6 -24	1
41A-35061-4	2-3-6 -	1
	2-3-18 -53	REF
41A-35062	2-3-6 -57	1
41A-35062-1	2-3-6 -55	1
41A-35063	2-3-6 -48	1
41A-35063-1	2-3-6 -	1
41A-35064	2-3-2 -32	1
41A-35064-1	2-3-2 -	1
41A-35064-4	2-3-2 -	1
41A-35064-5	2-3-2 -	1
41A-35069	2-3-5 - 3	REF
	2-3-18 -	NP
41A-35069-1	2-3-18 -	NP
41A-35069-2	2-3-18 -	1
41A-35069-3	2-3-18 -	1
41A-35069-4	2-3-18 - 1	1
41A-35069-5	2-3-18 - 2	1
41A-35070	2-3-3 -	NP
41A-35070-68	2-3-3 -	1
41A-35070-69	2-3-3 -	1
41A-35070-70	2-3-3 -21	2
	2-4-5 -17	REF
41A-35071	2-3-7 -	NP
41A-35071-110	2-3-7 - 4	1
41A-35071-2	2-3-7 -	1
41A-35071-32	2-3-7 - 1	1
41A-35071-4	2-3-7 -	1
41A-35074	2-3-5 - 8	REF
	2-3-18 -	NP
41A-35074-12	2-3-4 -49	1
	2-3-4 -57	1
	2-3-18 -22	1
	2-3-18 -31	1
41A-35074-2	2-3-18 -26	1
41A-35074-8	2-3-18 -28	1
41A-35077-10	2-3-10 -15	1
41A-35077-12	2-3-10 -13	1
41A-35077-4	2-3-10 -12	1
41A-35078	2-3-7 -58	1
	2-3-8 -50	REF
41A-35078-1	2-3-7 -	1
41A-35081	2-3-5 - 7	REF
	2-3-18 -	NP
41A-35081-12	2-3-18 -19	1
41A-35081-14	2-3-18 -20	1
41A-35081-16	2-3-18 -21	1
41A-35081-2	2-3-18 -17	1
41A-35081-20	2-3-4 -	1
	2-3-18 -25	1
41A-35081-34	2-3-5 - 9	1
	2-3-18 -24	1
	2-3-18 -57	REF
41A-35084	2-3-5 -	NP
41A-35084-1	2-3-5 -	NP
41A-35085	2-3-7 -37	2
41A-35087	2-3-7 -35	1
41A-35087-1	2-3-7 -	1
41A-35088	2-3-6 -	NP
41A-35088-1	2-3-6 -	NP
41A-35088-2	2-3-6 -31	1
41A-35088-3	2-3-6 -	1
41A-35089	2-3-6 -	1
41A-35089-1	2-3-6 -	1
41A-35089-2	2-3-6 -65	1
41A-35089-3	2-3-6 -	1
41A-35091-2	2-3-7 -69	1
	2-7-4 -56	REF
	2-9-1 -14	REF
	2-9-5 -64	REF
41A-35092	2-3-2 -10	REF
	2-3-4 -	NP
41A-35092-16	2-3-4 -54	1
41A-35092-2	2-3-4 -	1
41A-35094	2-3-10 -60	2
41A-35095	2-3-2 - 6	1
41A-35096-40	2-3-5 -10	REF
	2-3-18 -40	1
41A-35097-144	2-3-7 -59	4
41A-35097-28	2-3-7 -	1
41A-35097-29	2-3-7 -	1

PART NUMBER	FIG AND INDEX NO	QTY /AC
41A-35097-32	2-3-7 -	1
41A-35097-33	2-3-7 -	1
41A-35097-36	2-3-7 -	1
41A-35097-37	2-3-7 -	1
41A-35098	1-1 - 2	REF
	2-1-6 -	NP
41A-35098-1	2-1-6 -	NP
41A-35098-2/ST	2-1-6 -31	1
41A-35098-3/ST	2-1-6 -	1
41A-35100	2-3-2 -15	1
41A-35101	2-3-2 -	NP
41A-35101-4	2-3-2 -	AR
41A-35102-2	2-12-22 -	NP
41A-35103	2-3-5 - 6	REF
	2-3-18 -	NP
41A-35103-26	2-3-18 -14	2
41A-35103-4	2-3-18 -	2
41A-35103-8	2-3-18 -12	2
41A-35106	2-3-5 -11	REF
	2-3-18 -	NP
41A-35106-1	2-3-18 -	NP
41A-35106-10	2-3-18 -35	2
41A-35106-18	2-3-18 -38	2
41A-35106-20	2-3-18 -36	2
41A-35106-6	2-3-18 -	2
41A-35106-8	2-3-18 -33	2
41A-35107	2-3-6 - 1	1
	2-3-18 -49	REF
41A-35109	2-3-19 -12	2
41A-35110	2-3-2 - 9	REF
	2-3-4 -	NP
41A-35110-36	2-3-4 -	1
41A-35110-6	2-3-4 -46	1
41A-35110-952	2-3-4 -	
41A-35112	2-3-3 -18	2
41A-35113	2-3-3 -19	2
41A-35114	2-3-2 -	NP
41A-35114-1	2-3-2 -	NP
41A-35114-2	2-3-2 -38	1
41A-35114-3	2-3-2 -	1
41A-35114-4	2-3-2 -39	1
41A-35114-5	2-3-2 -	1
41A-35116	2-3-3 - 5	REF
	2-3-4 -	1
41A-35116-1	2-3-4 -	1
41A-35116-800	2-3-4 -	1
41A-35116-801	2-3-4 -	1
41A-35118-2	2-3-8 -10	1
41A-35118-22	2-3-8 -23	2
41A-35118-24	2-3-8 -22	2
41A-35118-26	2-3-8 -	4
41A-35118-28	2-3-8 -	4
41A-35118-3	2-3-8 -	1
41A-35119-2	2-3-6 -76	1
41A-35119-4	2-3-6 -77	1
41A-35119-76	2-3-6 -81	1
41A-35119-80	2-3-6 -83	1
41A-35119-800	2-3-6 -	NP
41A-35120	2-3-2 -	1
41A-35120-1	2-3-2 -	1
41A-35120-68	2-3-2 -26	1
41A-35120-69	2-3-2 -	1
41A-35121-26	2-3-4 -39	1
41A-35121-27	2-3-4 -	1
41A-35121-28	2-3-4 -40	4
41A-35121-30	2-3-4 -41	4
41A-35121-32	2-3-4 -	1
41A-35121-33	2-3-4 -	1
41A-35121-34	2-3-4 -	
41A-35121-35	2-3-4 -	
41A-35121-800	2-3-2 - 8	REF
	2-3-4 -	1
41A-35121-801	2-3-4 -	1
41A-35122-100	2-3-10 -62	1

PART NUMBER	FIG AND INDEX NO	QTY /AC
41A-35122-115	2-3-10 -56	1
41A-35122-148	2-3-10 -49	1
41A-35122-154	2-3-10 -46	1
41A-35122-156	2-3-10 -34	1
41A-35122-48	2-3-10 -37	1
41A-35122-49	2-3-10 -	1
41A-35122-54	2-3-10 -45	1
41A-35122-60	2-3-10 -40	1
41A-35122-62	2-3-10 -41	1
41A-35122-68	2-3-10 -61	2
41A-35122-72	2-3-10 -35	2
41A-35122-800	2-3-10 -	1
41A-35122-88	2-3-10 -57	1
41A-35122-89	2-3-10 -	1
41A-35122-90	2-3-10 -58	1
41A-35122-91	2-3-10 -	1
41A-35122-92	2-3-10 -	2
41A-35122-94	2-3-10 -	4
41A-35122-96	2-3-10 -59	2
41A-35123-2	2-3-8 -41	1
41A-35123-22	2-3-8 -36	1
41A-35123-23	2-3-8 -	1
41A-35125-12	2-4-6 -19	1
41A-35125-13	2-4-6 -	1
41A-35125-2	2-4-6 - 1	1
41A-35125-3	2-4-6 -	1
41A-35125-32	2-4-6 - 4	1
41A-35125-34	2-4-6 - 2	1
41A-35125-36	2-4-6 - 3	1
41A-35125-50	2-4-6 -	1
41A-35125-52	2-4-6 -	1
41A-35125-54	2-4-6 - 8	AR
	2-4-6 -13	AR
41A-35125-56	2-4-6 - 9	AR
	2-4-6 -14	AR
41A-35125-800	2-3-2 - 7	REF
	2-4-1 - 8	REF
	2-4-6 -	1
41A-35125-801	2-4-6 -	1
41A-35126-124	2-3-4 -	AR
41A-35126-126	2-3-4 -	AR
41A-35126-128	2-3-4 -	AR
41A-35126-130	2-3-4 -	AR
41A-35126-138	2-3-4 -37	1
41A-35126-139	2-3-4 -	1
41A-35126-140	2-3-4 -30	2
41A-35126-34	2-3-4 -34	2
41A-35126-36	2-3-4 -32	2
41A-35126-38	2-3-4 -33	2
41A-35126-70	2-3-4 -	1
41A-35126-71	2-3-4 -	1
41A-35126-72	2-3-4 -	1
41A-35126-73	2-3-4 -	1
41A-35126-74	2-3-4 -12	1
41A-35126-75	2-3-4 -	1
41A-35126-76	2-3-4 -11	1
41A-35126-77	2-3-4 -	1
41A-35126-804	2-3-3 - 1	REF
	2-3-4 -	1
41A-35126-805	2-3-4 -	1
41A-35126-84	2-3-4 -35	1
41A-35126-85	2-3-4 -	1
41A-35126-86	2-3-4 -31	1
41A-35126-87	2-3-4 -	1
41A-35127-16	2-3-3 -	1
41A-35127-17	2-3-3 -	1
41A-35127-54	2-3-3 -22	1
41A-35127-55	2-3-3 -	1
41A-35127-74	2-3-3 - 8	1
41A-35127-76	2-3-3 -24	1
41A-35127-77	2-3-3 -	1
41A-35127-90	2-3-3 -28	1
41A-35127-91	2-3-3 -	1
41A-35129-12	2-3-18 -45	4

PART NUMBER	FIG AND INDEX NO	QTY /AC
41A-35129-16	2-3-18 -	1
41A-35129-26	2-3-18 -	1
41A-35129-27	2-3-18 -44	1
41A-35129-48	2-3-5 -12	REF
	2-3-18 -	NP
41A-35133	2-3-8 -38	1
41A-35135	2-3-3 -30	1
41A-35139	2-3-6 -	NP
41A-35140	2-3-5 - 4	REF
	2-3-18 -	NP
41A-35140-2	2-3-18 -	1
41A-35140-4	2-3-18 - 4	1
41A-35140-6	2-3-18 - 5	1
41A-35140-8	2-3-18 - 7	1
41A-35144	2-3-6 -84	1
41A-35144-1	2-3-6 -	1
41A-35146	2-3-7 -64	1
41A-35146-1	2-3-7 -	1
41A-35147-12	2-3-5 -29	2
41A-35147-16	2-3-5 -	2
41A-35147-2	2-3-5 -20	1
41A-35147-3	2-3-5 -	1
41A-35147-4	2-3-5 -21	1
41A-35147-5	2-3-5 -	1
41A-35148	2-3-5 -	NP
	2-5-1 -31	REF
41A-35148-2	2-3-5 -	1
41A-35148-3	2-3-5 -	1
41A-35148-4	2-3-5 -	1
41A-35148-5	2-3-5 -	1
41A-35149	2-3-5 -	NP
41A-35149-1	2-3-5 -	NP
41A-35149-10	2-3-5 -18	2
41A-35149-12	2-3-5 -	2
41A-35152-2	2-3-5 -28	2
41A-35152-4	2-3-5 -27	2
41A-35154	2-3-5 -	1
41A-35154-1	2-3-5 -	1
41A-35154-2	2-3-5 -22	1
41A-35154-3	2-3-5 -	1
41A-35155	2-3-5 -	1
41A-35155-1	2-3-5 -	1
41A-35155-2	2-3-5 -23	1
41A-35155-3	2-3-5 -	1
41A-35156-12	2-3-20 -85	23
41A-35156-14	2-3-4 -44	1
41A-35157	2-3-7 -61	1
41A-35157-1	2-3-7 -	1
41A-35158-32	2-3-3 - 6	2
41A-35158-82	2-3-3 -	1
41A-35158-84	2-3-3 -	2
41A-35159	2-3-9 -	NP
41A-35159-1	2-3-9 -	NP
41A-35159-36	2-3-9 - 1	1
41A-35159-37	2-3-9 -	1
41A-35159-38	2-3-9 - 2	1
41A-35159-39	2-3-9 -	1
41A-35159-40	2-3-9 - 3	1
41A-35159-41	2-3-9 -	1
41A-35159-42	2-3-9 - 4	1
41A-35159-43	2-3-9 -	1
41A-35160	2-7-13 -	REF
41A-35160-168	2-3-9 -44	1
41A-35160-190	2-3-9 -17	1
41A-35160-194	2-3-9 - 6	1
41A-35160-195	2-3-9 -	1
41A-35160-206	2-3-9 -10	1
41A-35160-207	2-3-9 -	1
41A-35160-210	2-3-9 - 9	1
41A-35160-211	2-3-9 -	1
41A-35160-24	2-3-9 -43	1
41A-35160-260	2-3-9 -32	1
41A-35160-261	2-3-9 -	1
41A-35160-263	2-3-9 -28	1

PART NUMBER	FIG AND INDEX NO	QTY /AC	PART NUMBER	FIG AND INDEX NO	QTY /AC	PART NUMBER	FIG AND INDEX NO	QTY /AC
41A-35160-265	2-3-9 -29	1	41A-35165	2-3-6 -70	1	41A-35214-1	2-3-5 -	1
41A-35160-266	2-3-9 -23	1	41A-35166	2-3-6 -	NP	41A-35215	2-3-5 -44	1
41A-35160-267	2-3-9 -	1	41A-35166-12	2-3-6 -73	2	41A-35215-1	2-3-5 -	1
41A-35160-278	2-3-9 -	1	41A-35166-2	2-3-6 -69	1	41A-35216	2-3-5 -46	1
41A-35160-280	2-3-9 -35	1	41A-35166-3	2-3-6 -	1	41A-35216-1	2-3-5 -	1
41A-35160-282	2-3-9 -36	1	41A-35166-44	2-3-6 -	8	41A-36001-800	1-1 - 5	REF
41A-35160-30	2-1-1 -	1	41A-35168	2-3-2 -	NP		2-3-19 -	1
41A-35160-31	2-1-1 -	1	41A-35168-1	2-3-2 -	NP	41A-36001-802	2-3-19 -	
41A-35160-32	2-1-1 -20	1	41A-35168-2	2-3-2 -19	1	41A-36002-122	2-3-20 -	4
41A-35160-33	2-1-1 -	1	41A-35168-3	2-3-2 -	1	41A-36002-126	2-3-20 -62	1
41A-35160-340	2-3-9 -37	1	41A-35168-4	2-3-2 -20	1	41A-36002-128	2-3-20 -46	1
41A-35160-342	2-3-9 -38	1	41A-35168-5	2-3-2 -	1	41A-36002-130	2-3-20 -65	1
41A-35160-344	2-3-9 -21	1	41A-3517-2	2-1-1 -	1	41A-36002-132	2-3-20 -82	1
41A-35160-348	2-3-9 -26	1	41A-35170-1	2-1-1 -23	1	41A-36002-134	2-3-20 -38	4
41A-35160-362	2-3-9 -	1	41A-35170-10	2-3-9 -70	1	41A-36002-136	2-3-20 -	4
41A-35160-370	2-3-9 -15	4	41A-35170-12	2-3-9 -73	1	41A-36002-194	2-3-20 -	1
41A-35160-372	2-3-9 -14	1	41A-35170-13	2-3-9 -	1	41A-36002-310	2-3-20 -60	1
41A-35160-373	2-3-9 -	1	41A-35170-16	2-3-9 -	1	41A-36002-320	2-3-20 -50	1
41A-35160-376	2-3-9 -11	1	41A-35170-18	2-3-9 -	1	41A-36002-322	2-3-20 -56	1
41A-35160-377	2-3-9 -	1	41A-35170-19	2-3-9 -	1	41A-36002-324	2-3-20 -59	1
41A-35160-378	2-3-9 -12	1	41A-35170-22	2-3-9 -	1	41A-36002-326	2-3-20 -52	1
41A-35160-379	2-3-9 -	1	41A-35170-23	2-3-9 -	1	41A-36002-328	2-3-20 -54	1
41A-35160-40	2-1-1 -13	1	41A-35170-24	2-3-9 -74	1	41A-36002-330	2-3-20 -53	1
41A-35160-41	2-1-1 -	1	41A-35170-25	2-3-9 -	1	41A-36002-332	2-3-20 -49	1
41A-35160-414	2-3-9 -		41A-35170-28	2-3-9 -75	1	41A-36002-802	2-3-19 - 1	REF
41A-35160-415	2-3-9 -		41A-35170-29	2-3-9 -	1		2-3-20 -	1
41A-35160-42	2-1-1 -15	1	41A-35170-8	2-3-9 -69	1	41A-36002-804	2-3-20 -	1
41A-35160-43	2-1-1 -	1	41A-35171	2-3-4 - 1	2	41A-36004	2-3-21 -	1
41A-35160-44	2-1-1 -16	1	41A-35171-1	2-3-4 -	2	41A-36004-1	2-3-21 -	1
41A-35160-45	2-1-1 -	1	41A-35172	2-3-4 -15	4	41A-36004-62	2-3-21 - 8	2
41A-35160-46	2-1-1 -17	1	41A-35173	2-3-4 -23	4	41A-36004-64	2-3-21 - 9	2
41A-35160-47	2-1-1 -	1	41A-35174-2	2-3-5 -14	2	41A-36004-66	2-3-21 -	1
41A-35160-48	2-1-1 -18	1	41A-35174-4	2-3-5 -15	2	41A-36004-68	2-3-21 - 1	1
41A-35160-49	2-1-1 -	1	41A-35177	2-3-8 -49	1	41A-36005	2-3-20 -	NP
41A-35160-50	2-1-1 -19	1	41A-35177-1	2-3-8 -	1	41A-36005-10	2-3-20 -	1
41A-35160-51	2-1-1 -	1	41A-35178-2	2-3-5 -	1	41A-36005-11	2-3-20 -	1
41A-35160-54	2-1-1 -12	1	41A-35178-3	2-3-5 -	1	41A-36005-801	2-3-20 -	NP
41A-35160-55	2-1-1 -	1	41A-35178-4	2-3-5 -16	1	41A-36006-1	2-3-20 -	NP
41A-35160-804	2-3-5 - 1	REF		2-5-1 -30	REF	41A-36006-27	2-3-20 -	1
	2-3-9 -	NP	41A-35178-5	2-3-5 -	1	41A-36006-32	2-3-20 -83	1
41A-35160-805	2-3-9 -	NP	41A-35179	2-3-18 -	NP	41A-36006-38	2-3-20 -	NP
41A-35161	1-1 - 6	REF	41A-35181-6	2-4-6 -	1	41A-36007	2-3-19 -	NP
	2-3-9 -	NP	41A-35181-7	2-4-6 -	1	41A-36011	2-3-20 -	NP
41A-35161-1	2-3-9 -	NP	41A-35181-8	2-4-6 - 6	1	41A-36011-108	2-3-20 -	1
41A-35161-10	2-3-9 -	1	41A-35181-9	2-4-6 -	1	41A-36011-110	2-3-20 -	1
41A-35161-11	2-3-9 -	1	41A-35182-6	2-4-6 -	1	41A-36011-120	2-3-20 -10	1
41A-35161-12	2-3-9 -	1	41A-35182-7	2-4-6 -	1	41A-36011-2	2-3-20 -	1
41A-35161-13	2-3-9 -	1	41A-35182-8	2-4-6 -11	1	41A-36011-60	2-3-20 -19	2
41A-35161-2	2-1-1 -22	1	41A-35182-9	2-4-6 -	1	41A-36011-61	2-3-20 -20	2
41A-35161-20	2-3-9 -61	1	41A-35183	2-4-5 -16	REF	41A-36011-62	2-3-20 -15	2
41A-35161-22	2-3-9 -57	1		2-4-6 -16	1	41A-36011-63	2-3-20 -16	2
41A-35161-28	2-3-9 -	1	41A-35183-1	2-4-6 -	1	41A-36011-64	2-3-20 -17	4
41A-35161-29	2-3-9 -	1	41A-35189	2-3-6 -38	1	41A-36011-65	2-3-20 -18	4
41A-35161-3	2-1-1 -	1	41A-35189-1	2-3-6 -	1	41A-36027	2-3-20 -	REF
41A-35161-30	2-3-9 -56	1	41A-35192	2-3-9 -	NP		2-12-25 -	NP
41A-35161-32	2-3-9 -	1	41A-35192-14	2-3-9 -	1	41A-36027-2	2-12-25 -	1
41A-35161-36	2-3-9 -59	1	41A-35192-16	2-3-9 -	1	41A-36030	2-3-20 -26	1
41A-35161-38	2-3-9 -63	1	41A-35192-20	2-3-9 -19	1	41A-36030-1	2-3-20 -	1
41A-35161-4	2-3-9 -	1	41A-35192-8	2-3-9 -18	1	41A-36031	2-3-20 -27	1
41A-35161-40	2-3-9 -65	1	41A-35193	2-3-9 -41	1	41A-36031-1	2-3-20 -	1
41A-35161-6	2-3-9 -	1	41A-35196	2-3-6 -	1	41A-36032	2-3-20 -28	1
41A-35161-8	2-3-9 -	1	41A-35200	2-3-6 -	NP	41A-36032-1	2-3-20 -	1
41A-35161-80	2-3-9 -67	1	41A-35202	2-3-9 - 8	1	41A-36033	2-3-20 -29	1
41A-35162	2-3-2 -	NP	41A-35202-1	2-3-9 -	1	41A-36033-1	2-3-20 -	1
41A-35162-1	2-3-2 -	NP	41A-35203	2-3-2 -	NP	41A-36034	2-3-20 -30	1
41A-35162-14	2-3-2 -17	1	41A-35203-1	2-3-2 -	NP	41A-36034-1	2-3-20 -	1
41A-35162-15	2-3-2 -	1	41A-35203-2	2-3-2 -42	1	41A-36035	2-3-20 -31	1
41A-35162-16	2-3-2 -18	1	41A-35203-3	2-3-2 -	1	41A-36035-1	2-3-20 -	1
41A-35162-17	2-3-2 -	1	41A-35203-4	2-3-2 -43	8	41A-36038	2-3-20 -	1
41A-35162-2	2-3-2 -	1	41A-35203-6	2-3-2 -44	4	41A-36038-1	2-3-20 -	1
41A-35162-3	2-3-2 -	1	41A-35204	2-1-3 -57	2	41A-36038-2	2-3-20 -24	1
41A-35162-4	2-3-2 -	1		2-3-2 -16	1	41A-36038-3	2-3-20 -	1
41A-35162-5	2-3-2 -	1	41A-35212-800	2-3-6 -78	2	41A-36039	2-3-20 -	1
41A-35164	2-3-8 -19	2	41A-35214	2-3-5 -45	1	41A-36039-1	2-3-20 -	1

PART NUMBER	FIG AND INDEX NO	QTY /AC
41A-36039-2	2-3-20 -25	1
41A-36039-3	2-3-20 -	1
41A-36042	2-3-20 -	REF
	2-7-15 -	NP
41A-36042-2	2-7-15 -	1
41A-36042-6	2-7-15 -49	1
41A-36044	2-7-15 -	1
41A-36044-2	2-7-15 -37	1
41A-36045	2-7-15 -41	1
41A-36046	2-7-15 -	1
41A-36046-2	2-2-1 -20	REF
	2-7-15 -42	1
41A-36051	2-3-21 -10	1
41A-36051-1	2-3-21 -	1
41A-36052	2-3-21 - 3	2
41A-36053	2-3-21 -	1
41A-36053-1	2-3-21 -	1
41A-36053-10	2-3-21 -	2
41A-36053-2	2-3-21 - 4	1
41A-36053-3	2-3-21 -	1
41A-36053-6	2-3-21 -	1
41A-36053-7	2-3-21 -	1
41A-36054	2-3-21 -	1
41A-36054-1	2-3-21 -	1
41A-36054-10	2-3-21 -	2
41A-36054-2	2-3-21 - 6	1
41A-36054-3	2-3-21 -	1
41A-36054-6	2-3-21 -	1
41A-36054-7	2-3-21 -	1
41A-36055	2-3-20 -	NP
41A-36055-14	2-3-20 -70	1
41A-36055-15	2-3-20 -	1
41A-36055-16	2-3-20 -69	1
41A-36055-17	2-3-20 -	1
41A-36055-18	2-3-20 -68	1
41A-36055-19	2-3-20 -	1
41A-36055-20	2-3-20 -	2
41A-36055-22	2-3-20 -72	2
41A-36055-24	2-3-20 -74	4
41A-36055-26	2-3-20 -76	4
41A-36055-28	2-3-20 -77	4
41A-36055-34	2-3-20 -	2
41A-36055-36	2-3-20 -73	2
41A-36056	2-3-20 -	NP
41A-36056-10	2-3-20 -43	1
41A-36056-2	2-3-20 -	1
41A-36056-4	2-3-20 -40	1
41A-36056-6	2-3-20 -	1
41A-36056-8	2-3-20 -41	1
41A-36057	2-3-19 - 2	REF
	2-3-21 -	NP
41A-36057-1	2-3-21 -	NP
41A-36058-10	2-3-19 -	1
41A-36058-12	2-3-19 -	1
41A-36058-6	2-3-19 -	1
41A-36058-8	2-3-19 -	1
41A-36059	2-3-19 -15	2
41A-36060	2-3-19 -11	2
41A-36060-2	2-3-19 -	
41A-36061-18	2-3-20 -84	1
41A-36062	2-3-20 -23	8
41A-36062-2	2-3-20 -	8
41A-36063/S	2-3-20 -11	1
41A-36065-14	2-3-20 - 2	1
41A-36065-66	2-3-20 - 6	1
41A-36065-68	2-3-20 - 5	1
41A-36065-800	2-3-20 - 1	1
41A-40200	1-1 -	REF
	2-17-1 -	NP
	2-17-2 -	REF
41A-40515-6	2-16-3 -17	4
41A-40550	2-16-1 -	REF
41A-40550-13	2-16-3 -	AR
41A-40550-22	2-16-3 - 7	2

PART NUMBER	FIG AND INDEX NO	QTY /AC
41A-40550-30	2-16-3 -40	2
41A-40550-818	2-16-4 -	REF
41A-40550-820	2-16-3 -	1
41A-40550-821	2-16-3 -	1
41A-40552-106	2-16-3 -	2
41A-40552-24	2-16-3 -24	2
41A-40552-822	2-16-3 -	AR
41A-40552-822ARAD	2-16-3 -	AR
41A-40553	2-11-1 -83	REF
41A-40553-802	2-16-3 -	2
41A-40554	2-16-3 - 4	2
41A-40554-1	2-16-3 -	2
41A-40555	2-16-3 -12	2
41A-40556	2-16-3 -11	2
41A-40568-2	2-16-4 -72	1
41A-40568-3	2-16-4 -	1
41A-41550	2-16-1 -	REF
	2-16-2 -	NP
41A-41550-10	2-16-2 - 9	1
41A-41550-11	2-16-2 -10	1
41A-41550-16	2-16-2 -14	1
41A-41550-18	2-16-2 -16	1
41A-41550-2	2-16-2 - 1	1
41A-41550-22	2-16-2 -18	1
41A-41550-23	2-16-2 -	1
41A-41550-24	2-16-2 -19	1
41A-41550-25	2-16-2 -	1
41A-41550-26	2-16-2 -20	1
41A-41550-27	2-16-2 -22	1
41A-41550-28	2-16-2 -	1
41A-41550-30	2-16-2 -	1
	2-16-2 -	1
41A-41550-4	2-16-2 - 2	1
41A-41550-40	2-16-2 - 7	1
41A-41550-41	2-16-2 -	1
41A-41550-44	2-16-2 -	1
41A-41550-46	2-16-2 - 6	1
41A-41550-47	2-16-2 -	1
41A-41550-49	2-16-2 -	1
41A-41550-5	2-16-2 -	1
41A-41550-56	2-16-2 - 3	1
41A-41550-57	2-16-2 -	1
41A-41550-58	2-16-2 - 4	1
41A-41550-59	2-16-2 -	1
41A-41550-6	2-16-2 - 5	1
41A-41550-60	2-16-2 -13	2
41A-41550-62	2-16-2 -17	1
41A-41550-64	2-16-2 -23	1
41A-41550-7	2-16-2 -	1
41A-41550-70	2-16-2 - 8	1
41A-41550-80	2-16-2 -21	1
41A-41550-84	2-16-2 -15	1
41A-41560	2-16-2 -	NP
41A-41560-2	2-16-2 -25	1
41A-41560-3	2-16-2 -	1
41A-41560-4	2-16-2 -	1
41A-41562	2-16-2 -30	2
41A-41565	2-3-1 -19	REF
	2-3-9 -	NP
41A-41565-2	2-3-9 -49	1
41A-41565-3	2-3-9 -	1
41A-41566	2-12-15 -	NP
41A-41566-2	2-12-15 -	1
41A-41566-4	2-12-15 - 8	1
41A-41566-6	2-12-15 -10	1
41A-42000	2-3-1 -13	REF
	2-9-2 -	NP
41A-42000-1	2-9-2 - 2	REF
	2-9-5 -	NP
41A-42000-10	2-9-2 - 6	REF
	2-9-6 -	NP
41A-42000-118	2-9-6 -32	1
41A-42000-2	2-9-2 - 9	REF

PART NUMBER	FIG AND INDEX NO	QTY /AC
	2-10-1 -	NP
41A-42000-201	2-9-8 -	2
41A-42000-203	2-9-4 -16	1
41A-42000-211	2-9-5 -44	4
41A-42000-221	2-9-5 -15	2
41A-42000-3	2-9-2 -10	REF
	2-10-1 -	NP
41A-42000-38	2-9-4 -	2
41A-42000-5	2-9-2 - 4	REF
	2-9-5 -	NP
41A-42000-6	2-9-2 - 5	REF
	2-9-7 -	NP
41A-42000-7	2-9-2 - 8	REF
	2-9-8 -	NP
41A-42000-8	2-9-2 - 7	REF
	2-9-7 -	NP
41A-42000-83	2-9-7 -12	AR
41A-42000-9	2-9-2 - 3	REF
	2-9-4 -	NP
41A-42001	2-10-1 -23	1
41A-42002	2-9-1 -31	REF
41A-42002-2	2-10-1 -14	1
41A-42003	2-10-1 -19	1
41A-42004	2-9-1 -32	REF
41A-42004-800	2-10-1 -22	1
41A-42004-801	2-10-1 -	1
41A-42006-800	2-10-1 - 3	1
41A-42006-801	2-10-1 -	1
41A-42007	2-9-1 -30	REF
41A-42007-800	2-10-1 - 8	1
41A-42007-801	2-10-1 -	1
41A-42009-2	2-5-5 -32	REF
41A-42016	2-3-11 -	1
41A-42016-2	2-3-11 -	1
41A-42016-4	2-3-11 - 8	1
41A-42016-8	2-3-11 -	1
41A-42018	2-3-2 -12	1
41A-42018-1	2-3-2 -	1
41A-42019	2-3-2 -11	1
41A-42019-1	2-3-2 -	1
41A-42100	2-3-1 -15	REF
	2-12-3 -	NP
	2-13-2 -	REF
	2-14-3 -	REF
41A-42101	2-3-1 -16	REF
	2-6-5 -	REF
	2-12-18 -	NP
	2-13-2 -	REF
	2-14-3 -	REF
	2-14-4 -	REF
41A-42101-33	2-12-18 - 7	1
41A-42102	2-2-3 -	REF
	2-3-19 - 9	REF
	2-12-25 -	NP
41A-42102-2	2-12-25 -	NP
41A-42102-4	2-2-4 -37	REF
	2-12-25 -	NP
41A-42103-54	2-1-8 -	REF
	2-12-23 -	NP
41A-42103-58	2-1-1 - 9	REF
	2-12-23 -	NP
41A-42103-59	2-12-23 -	NP
41A-42103-60	2-1-2 -	REF
	2-12-23 -	NP
	2-14-4 -	REF
41A-42103-61	2-12-23 -	NP
	2-13-2 -	REF
41A-42105	2-3-1 -17	REF
	2-12-22 -	NP
41A-42110-2	2-12-7 -	1
41A-42110-4	2-12-3 -13	1
41A-42112-16	2-12-6 -31	1
41A-42112-42	2-12-6 -33	1
41A-42112-44	2-12-6 -32	1

PART NUMBER	FIG AND INDEX NO	QTY /AC
41A-42112-56	2-12-6 - 34	4
41A-42112-70	2-12-6 - 30	1
41A-42112-72	2-12-6 -	1
41A-42112-82	2-12-1 - 4	REF
	2-12-3 - 2	REF
	2-12-6 -	NP
41A-42113	2-7-1 - 24	REF
41A-42117	2-12-22 -	NP
41A-42118	2-12-1 - 37	REF
	2-12-23 - 6	1
41A-42118-1	2-12-1 - 38	REF
	2-12-23 -	1
41A-42120-32	2-12-3 -	1
41A-42120-34	2-12-3 - 4	1
41A-42122	2-12-25 -	NP
41A-42122-30	2-12-25 - 68	1
41A-42123	2-12-1 - 10	REF
	2-12-3 - 6	2
41A-42124-19	2-15-2 - 25	8
41A-42124-800	2-1-1 - 10	REF
	2-15-2 -	NP
41A-42125	2-3-1 -	REF
	2-15-1 -	NP
41A-42126-14	2-15-1 - 5	1
41A-42126-16	2-15-1 - 7	1
41A-42126-18	2-15-1 - 9	1
41A-42126-26	2-15-1 - 15	1
41A-42126-28	2-15-1 - 17	1
41A-42126-30	2-15-1 - 19	1
41A-42126-32	2-15-1 - 21	1
41A-42126-34	2-15-1 - 22	1
41A-42126-36	2-15-1 - 3	1
41A-42126-38	2-15-1 - 13	1
41A-42126-4	2-15-2 - 20	1
41A-42126-40	2-15-2 - 18	1
41A-42126-42	2-15-2 - 15	1
41A-42126-8	2-15-1 - 1	1
41A-42127	2-2-3 -	REF
41A-42128	2-16-1 - 10	1
41A-42129	2-12-22 -	NP
41A-42129-2	2-12-1 - 33	REF
	2-12-22 -	1
41A-42130-4	2-12-3 - 5	1
41A-42130-8	2-12-3 -	1
41A-42133	2-15-2 - 9	1
41A-42134	2-12-3 -	NP
41A-42141	2-12-18 -	NP
41A-42143	2-12-18 - 8	1
41A-42144	2-12-18 - 9	1
41A-42147	2-1-4 - 15	1
41A-42148	2-1-4 - 16	1
41A-42149-4	2-1-4 - 17	3
41A-42149-8	2-1-4 - 13	14
41A-42151-10	2-1-4 - 10	2
41A-42151-12	2-1-4 - 12	2
41A-42151-14	2-1-4 - 11	2
41A-42152-32	2-12-1 - 23	REF
41A-42153-10	2-12-7 -110	1
41A-42153-12	2-12-7 -	1
	2-12-7 -	1
41A-42153-14	2-12-7 -	1
	2-12-7 -	1
41A-42153-2	2-12-7 -	2
41A-42153-4	2-12-7 -	1
41A-42155	2-12-7 -104	1
41A-42155-2	2-12-7 -	2
41A-42155-4	2-12-7 -	2
41A-42156	2-12-22 -	NP
41A-42157	2-12-7 -	1
41A-42159-2	2-12-8 - 1	6
41A-42159-4	2-12-8 - 2	1
41A-42159-6	2-12-8 - 3	1
41A-42159-8	2-12-8 - 4	3
41A-42160	2-12-22 - 4	2
41A-42167	2-12-23 -	1
41A-42167-1	2-12-23 -	1
41A-42167-2	2-12-23 - 2	1
41A-42167-3	2-12-23 -	1
41A-42168	2-12-9 - 6	REF
	2-12-16 -	NP
41A-42169	2-12-3 -	REF
	2-12-6 -	NP
	2-12-6 -50	1
41A-42169-38	2-12-6 -49	1
41A-42169-810	2-12-6 -	1
41A-42170	2-7-17 -48	REF
	2-12-25 -53	2
41A-42171	2-3-20 -	REF
41A-42172	2-12-22 -	NP
41A-42172-2	2-12-22 -26	1
41A-42173	2-3-20 -	REF
	2-12-25 -	NP
41A-42173-2	2-12-25 -77	1
41A-42173-4	2-12-25 -78	1
41A-42200	2-3-1 - 2	REF
	2-12-9 -	REF
	2-13-4 -	REF
	2-14-1 -	REF
	2-16-1 -	REF
	2-16-4 -	REF
41A-42201	2-12-9 - 4	REF
	2-12-15 -	NP
41A-42201-2	2-12-1 -21	REF
	2-12-15 - 1	1
41A-42201-3	2-12-15 - 2	1
41A-42201-4	2-12-15 - 5	1
41A-42201-5	2-12-15 - 6	1
41A-42202	2-12-15 -11	1
41A-42202-4	2-12-15 -13	1
41A-42203	2-12-9 - 7	REF
	2-12-10 -	NP
	2-14-4 -	REF
41A-42203-62	2-12-10 -	1
41A-42203-70	2-12-10 -	1
41A-42204-10	2-12-12 - 8	1
41A-42204-12	2-12-12 -11	1
41A-42204-14	2-12-11 -14	1
41A-42204-140	2-12-1 -18	REF
	2-12-12 - 1	1
41A-42204-15	2-12-12 -12	1
41A-42204-16	2-12-11 -11	1
41A-42204-17	2-12-12 - 7	1
41A-42204-2	2-12-1 -17	REF
	2-12-11 - 1	1
41A-42204-30	2-12-11 - 2	1
41A-42204-34	2-12-11 -13	1
41A-42204-4	2-12-11 - 3	1
41A-42204-42	2-12-11 - 9	1
41A-42204-48	2-12-12 - 2	1
41A-42204-5	2-12-12 - 5	1
41A-42204-52	2-12-12 - 9	1
41A-42204-58	2-12-12 -13	REF
41A-42204-6	2-12-11 - 7	1
41A-42204-8	2-12-11 -12	1
41A-42204-804	2-12-11 -	NP
41A-42204-807	2-12-12 -	NP
41A-42205-16	2-12-10 -12	1
41A-42205-18	2-12-10 -16	1
41A-42205-28	2-12-10 -	1
41A-42205-30	2-12-10 - 5	1
41A-42205-4	2-12-10 - 1	1
41A-42205-6	2-12-10 - 2	1
41A-42205-8	2-12-10 - 3	1
41A-42206-20	2-12-14 -27	1
41A-42206-4	2-12-14 -35	1
41A-42208	2-16-1 -	NP
41A-42208-2	2-16-1 -17	2
41A-42209	2-16-1 -	NP
41A-42209-1	2-16-1 -	NP
41A-42209-26	2-16-1 - 1	1
41A-42209-27	2-16-1 -	1
41A-42209-34	2-16-1 - 3	1
41A-42209-35	2-16-1 - 4	1
41A-42210	2-16-1 -	NP
41A-42210-26	2-16-1 -12	1
41A-42210-4	2-16-1 - 8	1
41A-42210-5	2-12-13 -25	REF
	2-16-1 - 9	1
41A-42211-10	2-16-1 -	2
41A-42211-12	2-16-1 -23	2
41A-42211-14	2-16-1 -24	2
41A-42211-16	2-16-1 -25	2
41A-42211-2	2-16-1 -	NP
41A-42211-4	2-16-1 -	NP
41A-42211-52	2-16-1 -	2
41A-42211-6	2-16-1 -	2
41A-42211-8	2-16-1 -21	2
41A-42212	2-16-1 -	NP
41A-42212-10	2-16-1 -31	1
41A-42212-12	2-16-1 -30	1
41A-42212-16	2-16-1 -33	1
41A-42212-20	2-16-1 -34	2
41A-42212-4	2-16-1 -	1
41A-42212-56	2-12-6 -21	4
41A-42212-6	2-16-1 -	1
41A-42213	2-16-1 -	NP
41A-42213-12	2-16-1 -	1
41A-42213-14	2-16-1 -	1
41A-42213-16	2-16-1 -	1
41A-42213-19	2-16-1 -	1
41A-42213-2	2-16-1 -35	1
41A-42213-20	2-16-1 -	1
41A-42213-4	2-16-1 -38	1
41A-42213-8	2-16-1 -37	1
41A-42300	2-3-1 -12	REF
	2-8-2 -	NP
41A-42301	2-1-1 - 8	REF
	2-8-2 - 7	REF
	2-8-12 -	NP
41A-42301-1	2-8-12 -	NP
41A-42301-82	2-8-12 -	NP
41A-42301-83	2-8-12 -	NP
41A-42301-92	2-8-12 -41	AR
41A-42302	2-8-2 - 5	REF
	2-8-8 -	NP
	2-8-9 -	REF
	2-8-10 -	REF
41A-42303	2-8-2 - 1	REF
	2-8-3 -	NP
41A-42304	2-8-2 - 2	REF
	2-8-4 -	NP
41A-42304-2	2-8-4 -	1
41A-42304-3	2-8-4 -	1
41A-42304-68	2-8-4 -67	1
41A-42305	2-8-2 - 4	REF
	2-8-7 -	NP
41A-42306	2-3-19 - 7	REF
	2-8-2 - 9	REF
	2-8-14 -	NP
41A-42306-46	2-8-14 - 8	2
41A-42306-50	2-8-14 -	2
41A-42306-58	2-8-14 - 7	4
41A-42307	2-1-2 - 4	REF
	2-8-2 - 8	REF
	2-8-13 -	NP
41A-42307-1	2-8-13 -	NP
41A-42309-2	2-4-9 -43	REF
	2-8-12 -11	4
	2-8-12 -22	4
41A-42310-12	2-8-4 -	1
41A-42311-2	2-8-4 -36	1
41A-42312	2-8-4 -	1

PART NUMBER	FIG AND INDEX NO	QTY /AC
41A-42314	2-8-4 -37	1
41A-42315-10	2-8-4 -	1
41A-42315-12	2-8-4 -	
41A-42315-14	2-8-1 - 6	REF
	2-8-4 -	
41A-42316	2-8-4 -63	2
41A-42317	2-8-4 -58	2
41A-42318	2-8-7 -14	3
41A-42319	2-8-7 -32	1
41A-42323	2-8-2 - 6	REF
	2-8-11 -	NP
41A-42324-10	2-8-11 -51	1
41A-42324-12	2-8-11 -63	1
41A-42324-14	2-8-11 -65	1
41A-42324-16	2-8-11 -41	1
41A-42324-18	2-8-11 -37	1
41A-42324-2	2-8-11 -20	1
41A-42324-20	2-8-11 -43	1
41A-42324-22	2-8-11 -39	1
41A-42324-26	2-8-11 -53	1
41A-42324-32	2-8-11 -21	1
41A-42324-34	2-8-11 -28	1
41A-42324-36	2-8-11 -34	1
41A-42324-38	2-8-11 -30	1
41A-42324-4	2-8-11 -27	1
41A-42324-40	2-8-11 -36	1
41A-42324-42	2-8-11 -32	1
41A-42324-44	2-8-11 -56	1
41A-42324-46	2-8-11 -54	1
41A-42324-52	2-8-11 -42	1
41A-42324-54	2-8-11 -38	1
41A-42324-56	2-8-11 -46	1
41A-42324-58	2-8-11 -40	1
41A-42324-6	2-8-11 -29	1
41A-42324-60	2-8-11 -52	1
41A-42324-62	2-8-11 -49	1
41A-42324-64	2-8-11 -35	1
41A-42324-66	2-8-11 -31	1
41A-42324-70	2-8-11 -19	1
41A-42324-74	2-8-11 -16	1
41A-42324-76	2-8-11 -15	1
41A-42324-78	2-8-11 -22	1
41A-42324-8	2-8-11 -33	1
41A-42324-80	2-8-11 -26	1
41A-42324-84	2-8-11 -17	1
41A-42324-86	2-8-11 -55	1
41A-42324-88	2-8-11 -48	1
41A-42325-14	2-8-12 -26	1
41A-42325-16	2-8-12 -	1
41A-42325-2	2-8-12 -29	1
41A-42325-22	2-8-12 -35	1
41A-42325-24	2-8-12 -	1
41A-42325-30	2-8-12 -45	1
41A-42325-32	2-8-12 -	1
41A-42325-34	2-8-12 -50	1
41A-42325-36	2-8-12 -	1
41A-42325-38	2-8-12 -53	1
41A-42325-4	2-8-12 -	1
41A-42325-40	2-8-12 -	1
41A-42325-42	2-8-12 -56	1
41A-42325-44	2-8-12 -	1
41A-42325-46	2-8-12 -59	1
41A-42325-48	2-8-12 -	1
41A-42325-50	2-8-12 -62	1
41A-42325-52	2-8-12 -	1
41A-42325-54	2-8-12 -67	1
41A-42325-56	2-8-12 -	1
41A-42325-58	2-8-13 -15	1
41A-42325-6	2-8-12 -32	1
41A-42325-60	2-8-13 -10	1
41A-42325-62	2-8-13 - 9	1
41A-42325-64	2-8-13 -14	1
41A-42325-66	2-8-13 -	1
41A-42325-68	2-8-13 -	1

PART NUMBER	FIG AND INDEX NO	QTY /AC
41A-42325-70	2-8-13 -	1
41A-42325-72	2-8-13 -	1
41A-42325-74	2-8-12 -65	1
41A-42325-76	2-8-12 -	1
41A-42325-8	2-8-12 -	1
41A-42326-10	2-8-3 -33	1
41A-42326-12	2-8-3 -22	1
41A-42326-14	2-8-4 -20	1
41A-42326-2	2-8-3 -23	1
41A-42326-22	2-8-4 -19	1
41A-42326-24	2-8-4 -30	1
41A-42326-26	2-8-4 -29	1
41A-42326-30	2-8-4 -48	1
41A-42326-32	2-8-4 -50	1
41A-42326-34	2-8-4 -32	1
41A-42326-36	2-8-4 -31	1
41A-42326-38	2-8-7 -37	1
41A-42326-4	2-8-3 -26	1
41A-42326-42	2-8-4 -52	1
41A-42326-44	2-8-7 -42	1
41A-42326-46	2-8-4 -53	1
41A-42326-50	2-8-4 -21	1
41A-42326-52	2-8-4 -22	1
41A-42326-54	2-8-4 -28	1
41A-42326-56	2-8-7 - 3	1
41A-42326-6	2-8-3 -27	1
41A-42326-62	2-8-4 -46	1
41A-42326-64	2-8-4 -72	REF
	2-8-7 - 9	1
41A-42326-68	2-8-7 - 5	1
41A-42326-70	2-8-7 - 7	1
41A-42326-72	2-8-4 -27	1
41A-42326-74	2-8-7 -38	1
41A-42326-76	2-8-7 -43	1
41A-42326-78	2-8-7 -40	1
41A-42326-8	2-8-3 -32	1
41A-42326-80	2-8-7 -44	1
41A-42326-82	2-8-4 -51	1
41A-42326-84	2-8-4 -18	1
41A-42326-86	2-8-7 - 1	1
41A-42326-88	2-8-7 -10	1
41A-42326-90	2-8-7 -12	1
41A-42327-22	2-8-4 -45	1
41A-42327-24	2-8-4 -43	1
41A-42327-26	2-8-12 -	1
41A-42327-40	2-4-3 -13	1
41A-42327-42	2-8-14 -19	1
41A-42327-44	2-8-14 -11	1
41A-42327-46	2-8-14 -12	1
41A-42327-48	2-8-14 -20	1
41A-42327-50	2-8-14 -13	1
41A-42327-52	2-8-14 -14	1
41A-42327-8	2-8-12 -38	1
41A-42328	2-8-13 - 6	2
41A-42332	2-8-1 -19	REF
	2-8-10 -94	REF
41A-42333-100	2-8-10 -15	1
41A-42333-12	2-8-8 -33	1
41A-42333-14	2-8-8 -35	1
41A-42333-16	2-8-8 -39	1
41A-42333-18	2-8-10 -37	1
41A-42333-20	2-8-10 -32	1
41A-42333-22	2-8-10 -82	1
41A-42333-30	2-8-10 -27	1
41A-42333-302	2-8-10 -18	1
41A-42333-32	2-8-10 -24	1
41A-42333-324	2-8-10 -29	1
41A-42333-326	2-8-10 -28	1
41A-42333-328	2-8-10 - 7	1
41A-42333-34	2-8-10 -60	1
41A-42333-36	2-8-10 -62	1
41A-42333-38	2-8-10 -56	1
41A-42333-4	2-8-8 -30	1
41A-42333-40	2-8-10 -58	1

PART NUMBER	FIG AND INDEX NO	QTY /AC
41A-42333-44	2-8-10 -39	1
41A-42333-46	2-8-10 -70	1
41A-42333-48	2-8-10 -69	1
41A-42333-50	2-8-10 -48	1
41A-42333-52	2-8-10 -54	1
41A-42333-56	2-8-10 -14	1
41A-42333-58	2-8-8 -42	1
41A-42333-62	2-8-10 -13	1
41A-42333-64	2-8-10 -76	1
41A-42333-66	2-8-10 -78	1
41A-42333-72	2-8-10 -80	1
41A-42333-74	2-8-10 - 5	1
41A-42333-76	2-8-10 -43	1
41A-42333-82	2-8-10 -17	1
41A-42333-84	2-8-10 -44	1
41A-42333-86	2-8-10 -46	1
41A-42333-88	2-8-10 -50	1
41A-42333-90	2-8-10 -52	1
41A-42333-92	2-8-10 -20	1
41A-42333-94	2-8-10 -22	1
41A-42333-950	2-8-10 - 2	1
41A-42333-952	2-8-10 - 3	1
41A-42333-98	2-8-10 -41	1
41A-42337	2-8-4 -	NP
41A-42339-10	2-8-9 -34	1
41A-43000	2-12-23 -	REF
41A-43012	2-12-1 -30	REF
	2-12-8 -	NP
	2-12-18 -	REF
41A-43013	2-12-7 -	NP
41A-43014	2-12-18 -	REF
41A-43014-92	2-3-9 -	1
41A-43015	2-12-18 -	REF
41A-43021	2-14-4 -	NP
41A-43022	2-14-4 -	NP
41A-44000	2-3-1 -10	REF
	2-5-1 -	NP
41A-44000-2	2-3-19 - 3	REF
	2-5-3 -	NP
41A-44001-2	2-5-4 -	NP
41A-44001-26	2-5-4 -34	4
41A-44001-4	2-3-19 - 4	REF
	2-5-4 -	NP
41A-44002-12	2-5-4 - 3	6
41A-44002-14	2-5-4 - 5	2
41A-44002-16	2-5-4 - 1	1
41A-44002-2	2-5-4 -	1
41A-44002-40	2-5-4 -	1
41A-44003-12	2-5-4 -27	1
41A-44003-6	2-5-4 -32	1
41A-44003-8	2-5-4 -33	1
41A-49051	2-3-1 -14	REF
	2-11-1 -	NP
41A-49051-32	2-11-1 -20	1
41A-49052-30	2-11-1 -52	1
41A-49052-32	2-11-2 - 4	REF
41A-49052-34	2-11-1 -57	1
41A-49054	2-11-1 -	NP
41A-49054-1	2-11-1 -	NP
41A-49054-66	2-11-1 -	2
41A-49055	2-11-1 -65	1
	2-11-1 -68	1
41A-49056-2	2-11-1 -66	1
	2-11-1 -69	1
41A-50011-14	2-12-9 -13	1
41A-50011-16	2-12-9 - 8	1
41A-50011-4	2-12-9 -15	1
41A-50704-33	2-14-2 -56	1
41A-50704-34	2-14-2 -57	1
41A-50704-40	2-14-2 -	18
41A-50708	2-6-2 -37	1
41A-50709	2-12-14 -26	1
41A-50715	2-14-2 -33	1
41A-50718	2-12-14 -33	1

PART NUMBER	FIG AND INDEX NO	QTY /AC
41A-50719	2-12-14 -38	1
41A-50725	2-12-29 - 7	1
41A-50726	2-12-29 - 6	1
41A-50728	2-7-11 -51	REF
	2-12-11 -24	1
41A-50729	2-14-1 -27	1
41A-50730	2-14-1 -42	1
41A-50731	2-12-14 -20	1
41A-50733	2-14-2 -40	1
41A-50734	2-12-14 -11	1
41A-50735	2-12-14 -	1
41A-50739	2-14-2 -37	1
41A-50761	2-12-11 -25	1
41A-51000	2-12-1 - 5	REF
	2-12-3 - 1	REF
	2-12-5 -	NP
41A-51000-16	2-12-5 - 5	2
41A-51000-28	2-12-5 -12	2
41A-51000-30	2-12-5 -	1
41A-51000-32	2-12-5 -17	1
41A-51000-36	2-12-5 -16	2
	2-12-5 -20	2
41A-51000-74	2-12-5 - 4	4
41A-51000-76	2-12-5 -21	1
41A-51000-77	2-12-5 -	1
41A-51202-6	2-12-14 - 1	1
41A-51204-4	2-12-14 -14	1
41A-51208	2-12-14 -	1
41A-51209	2-12-14 -	1
41A-51209-10	2-12-14 -	1
41A-51210	2-12-1 -20	REF
	2-12-14 -	1
41A-51212	2-12-13 -	NP
41A-51212-2	2-12-13 -	1
41A-51212-6	2-12-13 -	1
41A-51215	2-13-2 -	NP
41A-51216	2-13-2 -	NP
41A-51218	2-13-2 -	NP
41A-51219	2-13-2 -	NP
41A-51222	2-12-14 -13	1
41A-51222-10	2-12-14 -	1
41A-51222-2	2-12-14 -	1
41A-51222-4	2-12-14 -	1
41A-51222-6	2-12-14 -	1
41A-51222-8	2-12-14 -	1
41A-51223-2	2-12-3 - 7	1
41A-52003	2-14-1 -	NP
41A-52003-23	2-14-1 -	1
41A-52003-24	2-14-1 - 6	1
41A-52003-25	2-14-1 -	1
41A-52003-26	2-14-1 - 5	1
41A-52003-27	2-14-1 -	1
41A-52003-28	2-14-1 - 3	1
41A-52003-29	2-14-1 -	1
41A-52003-30	2-14-1 - 9	1
41A-52003-31	2-14-1 -	1
41A-52003-32	2-14-1 - 8	1
41A-52003-4	2-14-1 - 2	1
41A-52003-5	2-14-1 -	1
41A-52003-78	2-14-2 -	2
41A-52003-86	2-14-1 - 4	1
41A-52003-90	2-14-2 - 1	1
41A-52004-138	2-14-2 -	2
41A-52004-808	2-15-1 -	REF
41A-52011	2-12-9 - 5	REF
41A-52011-38	2-12-16 - 2	1
41A-52011-40	2-12-16 - 1	1
41A-52011-41	2-12-16 -	1
41A-52011-42	2-12-16 - 6	1
41A-52011-44	2-12-16 - 5	1
41A-52011-45	2-12-16 -	1
41A-52011-800	2-12-1 -22	REF
	2-12-16 -	NP
41A-52012	2-12-9 -	1

PART NUMBER	FIG AND INDEX NO	QTY /AC
41A-52013	2-12-9 -	NP
41A-52013-2	2-12-9 -	1
41A-52015	2-12-9 - 3	REF
	2-12-13 -	NP
	2-12-14 -	REF
	2-13-4 -	REF
41A-52017-800	2-12-14 -	1
41A-52018	2-3-2 -	REF
41A-52018-806	2-12-15 -	1
41A-52020	2-12-14 -	1
41A-52023	2-12-9 - 1	REF
	2-12-11 -	NP
41A-52023-86	2-12-11 -22	1
41A-52024	2-12-9 - 2	REF
	2-12-12 -	NP
	2-14-4 -	REF
41A-52025-805	2-14-1 -	NP
41A-52025-806	2-14-1 -	NP
41A-52025-87	2-14-1 -35	1
41A-52025-88	2-14-1 -17	1
41A-52025-89	2-14-1 -	1
41A-52025-90	2-14-1 -	1
41A-52202	2-12-1 -19	REF
	2-12-13 -	NP
41A-52202-12	2-12-13 - 6	2
	2-16-5 -14	REF
41A-52202-20	2-12-13 - 8	1
41A-52202-22	2-12-13 -10	1
41A-52202-24	2-12-13 -11	1
41A-52202-34	2-12-13 -	4
41A-52202-50	2-12-13 - 3	1
41A-52202-52	2-12-13 -	2
41A-52202-54	2-12-13 -13	2
41A-52202-56	2-12-13 -14	2
41A-52202-6	2-12-13 - 1	1
	2-16-5 -15	REF
41A-52202-8	2-12-13 -	1
41A-52202-800	2-12-13 -	1
41A-52202-94	2-12-13 -15	1
41A-57132	2-7-6 -	2
41A-57135-802	2-14-2 -	1
41A-57139	2-12-14 -	1
41A-57141-804	2-12-15 -	1
41A-57144	2-12-14 -	1
41A-57145-800	2-12-16 -	1
41A-57155	2-12-10 -	1
41A-57402	2-12-23 -	1
41A-57403	2-1-8 -	REF
41A-57502	2-12-23 -	REF
41A-57503	2-15-2 -	1
41A-57800	2-12-25 -	REF
41A-57802	2-12-25 -	REF
41A-61200	2-5-1 - 2	REF
	2-5-2 -	NP
41A-61200-1	2-5-2 -	NP
41A-61200-2	2-5-2 -	1
41A-61200-3	2-5-2 -	1
41A-61200-32	2-5-2 -10	2
41A-61200-34	2-5-2 -11	2
41A-61200-800	2-5-2 -	NP
41A-61200-801	2-5-2 -	NP
41A-61201	2-5-1 - 3	REF
	2-5-2 -	1
41A-61201-6	2-5-2 -20	1
41A-61210	2-5-2 -	2
41A-61210-2	2-5-2 - 1	2
41A-61211-2	2-5-2 - 4	1
41A-61211-3	2-5-2 -	1
41A-61211-5	2-5-2 -	
41A-61212	2-5-2 - 7	1
41A-61212-1	2-5-2 -	1
41A-61213-2	2-5-2 - 2	4
41A-61213-4	2-5-2 - 3	4
41A-61213-6	2-3-5 -24	4

PART NUMBER	FIG AND INDEX NO	QTY /AC
41A-61213-8	2-3-5 -25	4
41A-61220	2-5-2 -	2
41A-61220-800	2-5-2 -	2
41A-61221	2-5-2 -12	2
41A-61223	2-5-2 -15	2
41A-61300	2-5-1 -29	REF
41A-61300-18	2-5-3 -40	2
41A-61300-36	2-5-3 -	1
41A-61300-38	2-5-3 -	1
41A-61300-72	2-5-3 -28	AR
41A-61300-73	2-5-3 -	AR
41A-61300-800	2-5-3 -	NP
41A-61301	2-5-3 - 1	1
41A-61304-800	2-5-3 -26	2
41A-61305-2	2-5-3 -15	4
41A-61305-6	2-5-3 -	4
41A-61305-8	2-5-3 -	4
41A-61306	2-5-3 -	4
41A-61306-2	2-5-3 -11	4
41A-61308	2-5-3 -47	2
41A-61309-2	2-5-3 -19	1
41A-61309-58	2-5-3 -20	1
41A-61309-66	2-5-3 -21	3
41A-61309-68	2-5-3 -22	1
41A-61309-70	2-5-3 -23	1
41A-61309-72	2-5-3 -24	1
41A-61309-802	2-5-3 -	1
41A-61310	2-5-3 -43	2
41A-61311	2-5-3 -50	1
41A-61312	2-5-3 -31	2
41A-61313-6	2-5-3 - 4	2
41A-61313-8	2-5-3 -27	2
41A-61314	2-5-3 -45	1
41A-61315-10	2-5-3 -	1
41A-61315-12	2-3-20 -	NP
41A-61315-2	2-3-20 -	1
41A-61317	2-5-3 -30	2
41A-61318-2	2-5-3 - 7	2
41A-61318-4	2-5-3 - 5	1
41A-61318-6	2-5-3 - 6	1
41A-61405	2-5-1 -32	REF
	2-5-4 -43	REF
41A-61410	2-3-6 -	NP
41A-61410-1	2-3-6 -	NP
41A-65000-2	2-3-1 -	REF
	2-6-2 -	NP
41A-65000-4	2-3-19 - 5	REF
	2-6-6 -	NP
41A-65064-6	2-6-6 -21	1
41A-65200	2-6-2 -	NP
41A-65200-27	2-6-2 -42	2
41A-65200-40	2-6-2 -	2
41A-65201	2-6-2 - 1	REF
	2-6-3 -	NP
41A-65201-1	2-6-3 -	NP
41A-65201-2	2-6-2 -55	REF
	2-6-3 -11	2
41A-65201-4	2-6-3 -12	2
	2-6-4 -43	REF
41A-65201-6	2-6-2 -57	REF
	2-6-3 -22	2
41A-65201-75	2-6-1 -14	REF
	2-6-3 -	1
41A-65201-8	2-6-3 -38	1
41A-65202	2-6-2 - 2	REF
	2-6-4 -	NP
41A-65202-1	2-6-4 -	NP
41A-65202-24	2-6-1 -18	REF
41A-65202-31	2-6-4 -33	4
41A-65202-40	2-6-4 -32	1
41A-65202-46	2-6-4 -30	1
41A-65202-47	2-6-4 -31	1
41A-65202-60	2-6-4 -	AR
41A-65202-62	2-6-4 -	AR

PART NUMBER	FIG AND INDEX NO	QTY /AC
41A-65208	2-6-1 -35	REF
	2-6-7 -20	1
41A-65209-10	2-6-7 -17	1
41A-65209-12	2-6-7 -14	1
41A-65209-14	2-6-8 - 7	1
41A-65209-16	2-6-8 -12	1
	2-9-6 -41	REF
41A-65209-18	2-6-7 -42	1
41A-65209-2	2-6-7 -32	1
41A-65209-20	2-6-7 -43	1
41A-65209-24	2-6-7 -37	1
41A-65209-26	2-6-7 -36	1
	2-6-9 -16	REF
41A-65209-28	2-6-7 -10	1
41A-65209-30	2-6-4 -26	1
41A-65209-32	2-6-4 -25	1
41A-65209-34	2-6-2 -	1
41A-65209-36	2-6-1 - 7	REF
	2-6-2 -60	1
41A-65209-38	2-6-3 -69	1
41A-65209-4	2-6-7 -31	1
	2-6-9 - 8	REF
41A-65209-6	2-6-7 -	1
41A-65209-8	2-6-7 -25	1
41A-65210	2-6-1 - 5	REF
	2-6-1 -10	REF
	2-6-2 -13	1
	2-6-3 -14	2
	2-6-5 -54	REF
41A-65211-800	2-6-4 -18	REF
	2-6-7 - 1	1
41A-65212	2-6-4 -39	1
41A-65212-1	2-6-4 -	1
41A-65213	2-6-4 -20	1
	2-6-4 -21	1
41A-65221	2-6-1 - 4	REF
	2-6-1 -11	REF
	2-6-1 -13	REF
	2-6-1 -16	REF
	2-6-2 -15	2
	2-6-3 - 9	4
	2-6-3 -61	REF
	2-6-4 - 6	2
41A-65222	2-6-4 -11	1
	2-6-6 -78	REF
41A-65225-16	2-6-3 -34	1
41A-65225-2	2-6-2 -	1
41A-65225-4	2-6-3 -33	1
41A-65225-6	2-6-2 -31	1
41A-65226	2-6-2 -18	2
	2-6-3 -62	REF
41A-65226-1	2-6-2 -	2
41A-65227	2-6-1 -12	REF
	2-6-3 -16	2
	2-6-4 -44	REF
41A-65228	2-6-1 - 9	REF
	2-6-3 -18	1
41A-65228-1	2-6-3 -	1
41A-65229	2-6-1 - 2	REF
	2-6-2 -39	2
41A-65230-2	2-6-3 -43	1
41A-65230-3	2-6-3 -	1
41A-65230-4	2-6-3 -44	1
41A-65230-5	2-6-3 -	1
41A-65231	2-6-3 -	1
41A-65231-1	2-6-3 -	1
41A-65232	2-6-2 -	1
41A-65232-1	2-6-2 -	1
41A-65233	2-6-2 -	1
41A-65233-1	2-6-2 -	1
41A-65234	2-6-2 -47	1
41A-65234-1	2-6-2 -	1
41A-65235	2-6-1 - 6	REF
	2-6-2 -29	1

PART NUMBER	FIG AND INDEX NO	QTY /AC
	2-6-6 -77	REF
41A-65236	2-6-2 -32	1
41A-65237	2-6-2 -	1
41A-65238	2-6-3 -	2
41A-65239	2-6-2 -	1
41A-65239-1	2-6-2 -	1
41A-65240	2-6-4 -15	2
41A-65241	2-6-2 -33	1
41A-65242	2-3-6 -	NP
41A-65242-2	2-3-6 -37	1
41A-65242-6	2-3-6 -	1
41A-65242-7	2-3-6 -	1
41A-65242-72	2-3-6 -39	2
41A-65242-73	2-3-6 -40	2
41A-65242-74	2-3-6 -41	2
41A-65242-75	2-3-6 -42	2
41A-65243	2-3-5 - 5	REF
	2-6-3 -	NP
41A-65243-14	2-6-3 -	1
41A-65243-2	2-6-3 -45	1
41A-65243-27	2-6-3 -52	1
41A-65243-28	2-6-3 -49	1
41A-65243-50	2-6-3 -46	1
41A-65244	2-6-2 -	NP
41A-65244-2	2-6-2 -	NP
41A-65244-4	2-6-2 -	NP
41A-65244-6	2-6-2 -	NP
41A-65244-8	2-6-2 -	NP
41A-65244-9	2-6-2 -	NP
41A-65245	2-6-2 -40	2
	2-6-3 -19	2
41A-65246	2-6-2 -46	2
	2-6-3 -39	2
	2-6-4 -27	2
41A-65253	2-6-2 -24	1
41A-65254	2-6-2 -20	1
41A-65255	2-6-3 -24	1
41A-65256	2-6-3 -25	1
41A-65257	2-6-2 -	2
41A-65259	2-6-3 -	1
41A-65259-1	2-6-3 -	1
41A-65260	2-6-2 -35	1
41A-65261	2-6-3 -47	1
41A-65400	2-6-2 - 4	REF
41A-65400-30	2-6-5 -44	1
41A-65400-50	2-6-5 -	NP
41A-65501	2-6-2 - 5	REF
	2-6-6 -	NP
41A-65501-24	2-6-6 - 5	1
41A-65501-26	2-6-6 -40	2
41A-65501-52	2-6-6 -14	1
	2-6-6 -42	1
41A-65501-54	2-6-6 - 2	1
	2-6-6 -33	2
	2-6-6 -56	1
41A-65501-56	2-6-6 -22	1
41A-65502	2-6-6 -	NP
41A-65502-22	2-6-6 -64	1
41A-65511	2-6-4 -45	REF
	2-6-6 -39	1
41A-65512	2-6-2 -56	REF
	2-6-6 - 1	1
41A-65513	2-6-6 -35	1
41A-65514-10	2-6-6 -44	1
41A-65514-2	2-6-1 -28	REF
	2-6-6 -30	1
41A-65514-4	2-6-6 -13	1
41A-65514-6	2-6-6 - 4	1
41A-65514-8	2-6-1 -32	REF
	2-6-6 - 8	1
41A-65515	2-6-6 -55	1
41A-65516-12	2-6-6 -71	1
41A-65516-2	2-6-1 -31	REF
	2-6-6 -72	1

PART NUMBER	FIG AND INDEX NO	QTY /AC
41A-65516-28	2-6-6 -70	1
41A-65516-32	2-6-6 -	1
41A-65516-4	2-6-1 -30	REF
	2-6-6 -69	1
41A-65600	2-6-2 - 3	REF
	2-6-5 -	NP
41A-65600-2	2-6-5 -	1
41A-65601	2-6-1 -19	REF
	2-6-5 - 1	1
	2-6-6 -79	REF
41A-65602	2-6-5 -	1
41A-65616	2-6-1 -21	REF
	2-6-5 - 9	1
41A-65617	2-6-5 - 7	1
41A-65618-2	2-6-5 -13	1
41A-72070	2-13-4 -	1
41A-72070-2	2-13-4 -15	1
41A-72070-6	2-13-4 -16	1
41A-75023	2-9-1 -19	REF
41A-75023-4	2-8-8 - 1	1
41A-75023-6	2-8-8 - 8	1
41A-75023-800	2-8-1 -11	REF
	2-8-8 -	1
	2-9-6 -35	REF
41A-75050	2-8-2 - 3	REF
	2-8-6 -	NP
41A-75050-10	2-7-4 -59	REF
	2-8-6 -27	4
41A-75050-11	2-8-6 -	4
41A-75100	2-8-4 -	1
41A-75101-800	2-8-4 -	1
41A-75102-2	2-8-1 -15	REF
	2-8-9 -	1
41A-75102-6	2-8-1 -13	REF
	2-8-9 -	1
41A-75102-800	2-8-1 -14	REF
	2-8-9 -	1
41A-75103	2-8-1 -20	REF
	2-8-11 -	1
41A-75105	2-8-1 -12	REF
41A-75105-800	2-8-8 -	1
41A-75106	2-8-1 -18	REF
	2-8-10 -	1
41A-75107-800	2-8-1 -16	REF
	2-8-9 -	1
41A-75108	2-8-1 -17	REF
41A-75111-18	2-8-6 -	1
41A-75111-20	2-8-6 -	1
41A-75112-6	2-8-6 -	1
41A-75112-8	2-8-6 -	1
41A-75113-800	2-8-1 -29	REF
	2-8-14 -	1
41A-75113-801	2-8-14 -	1
41A-75116-16	2-8-1 -27	REF
	2-8-12 -	1
41A-75116-17	2-8-12 -	1
41A-75116-18	2-8-1 -24	REF
	2-8-12 -	1
41A-75116-19	2-8-12 -	1
41A-75116-30	2-8-12 -	
41A-75116-31	2-8-12 -	
41A-75116-32	2-8-12 -	
41A-75116-33	2-8-12 -	
41A-75117-800	2-8-1 -22	REF
	2-8-12 -	1
41A-75117-801	2-8-12 -	1
41A-75117-806	2-8-12 -	
41A-75117-807	2-8-12 -	
41A-75118-806	2-8-3 -	1
41A-75118-808	2-8-3 -	
41A-75119	2-8-1 -25	REF
	2-8-12 -	1
41A-75119-1	2-8-12 -	1
41A-75119-800	2-8-12 -	

PART NUMBER	FIG AND INDEX NO	QTY /AC
41A-75119-801	2-8-12 -	
41A-75120	2-8-1 -28	REF
	2-8-13 -	1
41A-75120-1	2-8-13 -	1
41A-75124-800	2-8-8 -	1
41A-75126	2-8-1 -10	REF
	2-8-6 -	1
41A-75126-13	2-8-6 -29	1
41A-75126-14	2-8-6 -30	1
41A-75126-16	2-8-6 -	1
41A-75129	2-8-10 -	1
41A-75129-800	2-8-10 -	1
41A-75201-10	2-4-7 -24	1
41A-75201-12	2-4-7 -	1
41A-75202-16	2-8-6 -59	1
41A-75202-18	2-8-6 -49	1
41A-75202-20	2-8-6 -48	1
41A-75202-22	2-8-6 -44	1
41A-75202-24	2-8-6 -45	1
41A-75202-26	2-8-6 -43	1
41A-75202-28	2-8-6 -40	1
41A-75202-42	2-8-6 -51	1
41A-75202-44	2-8-6 -53	1
41A-75202-46	2-8-6 -56	1
41A-75202-48	2-8-6 -52	1
41A-75202-50	2-8-6 -54	1
41A-75202-52	2-8-6 -57	1
41A-75202-8	2-8-6 -58	1
41A-75257-2	2-8-8 - 3	1
41A-75258	2-8-8 - 6	1
41A-75259	2-8-8 - 9	1
41A-75268-2	2-8-6 -28	1
41A-75268-4	2-8-6 -35	1
41A-75269	2-8-6 -31	1
41A-75270	2-8-6 -36	1
41A-75272	2-8-10 -91	1
41A-75274	2-3-6 -86	1
41A-75403	2-8-8 - 2	1
41A-75403-8	2-8-6 -34	1
41A-75404	2-8-8 -	1
41A-75404-2	2-8-8 -	1
41A-75404-4	2-8-8 -	1
41A-75405	2-8-7 -33	1
41A-80200-800	2-9-4 -17	1
41A-80201	2-9-1 - 6	REF
	2-9-4 - 1	1
41A-80201-1	2-9-4 -	1
41A-80202-2	2-9-1 - 7	REF
41A-80202-4	2-3-8	1
41A-80202-5	2-3-8	1
41A-80203-18	2-9-4 -	1
41A-80203-20	2-9-4 -13	2
41A-80203-800	2-9-1 - 8	REF
	2-9-4 -10	1
41A-80204-20	2-9-4 -29	1
41A-80204-22	2-9-4 -28	1
41A-80204-24	2-9-4 -	1
41A-80204-802	2-9-4 -24	1
41A-80204-804	2-9-4 -23	1
41A-80204-806	2-9-1 - 9	REF
	2-9-4 -20	1
41A-85000	2-4-2 -	NP
41A-85006	2-4-1 - 4	REF
	2-4-2 - 2	REF
	2-4-3 -	1
41A-85009	2-4-3 -24	2
41A-85009-2	2-4-3 -	2
41A-85010	2-4-3 -	1
41A-85010-2	2-4-3 -22	1
41A-85010-800	2-4-3 -	
41A-85010-802	2-4-3 -	
41A-85012	2-4-3 -25	2
41A-85012-2	2-4-3 -	2
41A-85013	2-4-3 -23	2

PART NUMBER	FIG AND INDEX NO	QTY /AC
41A-85014	2-4-3 - 30	2
41A-85016	2-4-3 -	2
41A-85016-2	2-4-3 - 29	2
41A-85018	2-4-2 - 9	1
	2-4-3 - 28	3
	2-4-3 - 33	REF
	2-4-8 - 29	2
	2-8-3 - 36	REF
	2-8-12 - 75	REF
41A-85020-14	2-4-3 -	1
41A-85020-2	2-4-3 - 26	1
41A-85021	2-8-1 - 1	REF
41A-85021-29	2-4-3 -	1
	2-12-7 -113	REF
41A-85021-50	2-4-3 -	2
41A-85021-80	2-4-3 -	1
41A-85021-82	2-4-2 - 1	REF
	2-4-3 -	NP
41A-85022	2-4-1 - 6	REF
41A-85022-12	2-4-5 -	2
41A-85022-14	2-4-5 - 5	2
41A-85023	2-4-2 - 10	REF
	2-4-5 -	NP
41A-85024	2-4-5 - 7	2
41A-85025	2-4-5 - 6	2
41A-85026	2-4-6 - 20	REF
41A-85026-2	2-4-5 - 11	2
41A-85028	2-4-1 - 7	REF
	2-4-5 - 10	2
41A-85029-6	2-4-3 - 5	1
41A-85036	2-4-2 - 6	AR
41A-87500	1-1 - 7	REF
	2-4-2 -	NP
41A-87500-40	2-4-1 - 24	REF
	2-4-2 - 30	2
	2-4-9 - 38	REF
41A-87500-43	2-4-2 - 14	2
41A-87500-45	2-4-2 - 17	2
41A-87500-75	2-4-8 -	
41A-87503	2-4-2 - 11	REF
	2-4-7 -	NP
	2-8-1 - 21	REF
	2-8-12 - 74	REF
41A-87503-37	2-4-7 -	1
41A-87503-950	2-4-7 - 2	2
41A-87503-952	2-4-7 - 3	2
41A-87506-60	2-4-8 -	4
41A-87506-818	2-4-2 - 25	REF
	2-4-8 -	1
41A-87506-819	2-4-8 -	1
41A-87508-28	2-4-9 - 8	REF
	2-12-23 -	1
	2-12-23 - 20	2
41A-87508-34	2-4-8 - 9	REF
	2-12-23 -	1
41A-87508-41	2-4-8 - 22	2
41A-87508-42	2-4-8 - 23	4
41A-87508-43	2-4-8 - 21	4
41A-87508-64	2-4-8 -	2
41A-87508-804	2-8-1 - 23	REF
	2-8-12 - 78	REF
41A-87508-808	2-4-1 - 16	REF
	2-4-8 -	1
41A-87508-809	2-4-8 -	1
41A-87509	2-4-2 - 28	REF
41A-87509-804	2-4-9 -	NP
41A-87509-805	2-4-9 -	NP
41A-87510-800	2-1-2 - 2	REF
	2-4-11 -	1
41A-87510-801	2-4-11 -	1
41A-87511	2-4-11 -	2
41A-87511-2	2-4-11 - 22	2
41A-87512	2-4-11 - 27	2
41A-87513	2-4-11 - 29	2

PART NUMBER	FIG AND INDEX NO	QTY /AC
41A-87514	2-4-11 -30	2
41A-87515	2-4-11 -33	2
41A-87516	2-4-11 -37	2
41A-87519-6	2-4-11 -38	2
41A-87520-30	2-4-9 -27	4
41A-87520-31	2-4-9 -28	2
41A-87520-42	2-4-9 -33	REF
	2-12-23 -	2
41A-87520-804	2-4-1 -19	REF
	2-4-9 -	1
	2-8-1 -26	REF
	2-8-12 -79	REF
41A-87520-805	2-4-9 -	1
41A-87521	2-4-9 -	REF
41A-87521-1	2-4-9 -	REF
41A-87521-2	2-4-9 - 1	1
41A-87521-3	2-4-9 -	1
41A-87522	2-4-9 -	NP
41A-87522-2	2-4-9 -16	2
41A-87523	2-1-3 -30	2
	2-4-9 -46	REF
	2-8-12 -76	REF
41A-87524	2-4-7 -39	1
41A-87524-1	2-4-7 -	1
41A-87524-804	2-4-7 -	2
41A-87525	2-4-7 -36	2
41A-87526-2	2-4-11 -32	2
41A-87526-8	2-4-11 -	2
41A-87526-9	2-4-11 -	2
41A-87527-6	2-4-11 -	1
41A-87527-7	2-4-11 -	1
41A-87527-8	2-4-11 -36	2
41A-87528	2-4-11 -39	2
41A-87529	2-4-11 -34	2
41A-87531-16	2-4-1 -15	REF
	2-4-8 -	2
41A-87531-18	2-4-8 - 3	2
41A-87532	2-4-1 -14	REF
	2-4-8 -	2
41A-87532-2	2-4-8 - 1	2
41A-87533-10	2-4-8 -25	1
41A-87533-8	2-4-8 -24	4
	2-4-8 -	1
41A-87534	2-4-8 - 5	2
41A-87536	2-4-8 - 2	8
41A-87537	2-4-9 - 4	4
41A-87537-2	2-4-9 -10	4
41A-87538	2-4-9 -	2
41A-87539	2-4-9 - 5	2
41A-87540	2-4-8 -	4
41A-87541	2-4-9 - 6	4
41A-87545-2	2-4-8 -11	2
41A-87548-20	2-4-8 - 6	2
41A-87549-12	2-4-9 -25	1
41A-87549-13	2-4-9 -	1
41A-87549-14	2-4-9 -26	1
41A-87549-15	2-4-9 -	1
41A-87551	2-4-2 -38	REF
	2-4-9 -	2
41A-87551-2	2-4-9 - 9	2
41A-87552	2-4-1 -21	REF
41A-87552-10	2-4-9 - 3	1
	2-8-12 -77	REF
41A-87552-11	2-4-9 -	1
41A-87552-800	2-4-9 -	1
41A-87552-801	2-4-9 -	1
41A-87553	2-4-9 - 7	2
41A-87554	2-4-9 -11	2
41A-87556-4	2-4-1 -20	REF
	2-4-5 - 2	2
	2-4-9 -13	2
	2-4-10 -22	REF
41A-87556-6	2-4-5 -	2
	2-4-5 -	2

PART NUMBER	FIG AND INDEX NO	QTY /AC
41A-87557-4	2-4-5 - 1	2
	2-4-9 -14	2
41A-87558	2-4-5 -	2
	2-4-9 -	2
41A-87562	2-4-7 - 5	1
41A-87562-1	2-4-7 -	1
41A-87563	2-4-8 -20	4
	2-4-9 -30	4
41A-87564	2-4-2 -	2
41A-87565-10	2-4-7 -11	1
41A-87565-11	2-4-7 -	1
41A-87566	2-4-2 -12	2
41A-87567	2-4-2 -13	2
41A-87571	2-4-9 -31	2
41A-87571-4	2-4-8 - 7	2
41A-87572	2-4-8 -16	2
	2-4-9 -22	2
41A-87574	2-4-8 -	2
41A-90004	1-1 - 8	REF
	2-3-1 -11	REF
	2-7-2 -	NP
	2-7-3 -	REF
41A-90005	1-1 -10	REF
	2-3-19 - 6	REF
	2-7-15 -	NP
	2-7-16 -	REF
	2-7-17 -	REF
41A-90006	2-3-1 -	NP
41A-90020	2-3-1 - 6	REF
	2-4-2 -35	REF
	2-8-5 -	NP
41A-90021-10	2-8-4 -71	REF
41A-90021-16	2-8-5 - 2	1
41A-90022	2-8-5 - 5	1
41A-90099-10	2-7-3 -	1
41A-90099-102	2-7-5 -	1
41A-90099-104	2-7-5 -	1
41A-90099-106	2-7-3 -	1
41A-90099-108	2-7-3 -	1
41A-90099-110	2-7-3 -	1
41A-90099-114	2-7-16 -	1
41A-90099-12	2-7-3 -	1
	2-7-15 -54	REF
41A-90099-120	2-7-3 -	1
41A-90099-122	2-7-3 -	1
41A-90099-124	2-7-3 -	1
41A-90099-128	2-7-16 -	1
41A-90099-132	2-7-17 -	1
41A-90099-134	2-7-17 -	1
41A-90099-136	2-7-3 -	1
41A-90099-138	2-7-3 -	1
41A-90099-14	2-7-3 -42	REF
	2-7-16 -	1
41A-90099-140	2-7-3 -	1
41A-90099-144	2-7-2 -60	REF
	2-7-8 -31	2
41A-90099-148	2-7-8 -	2
41A-90099-152	2-7-8 -27	2
41A-90099-156	2-7-8 -	2
41A-90099-158	2-7-6 -	1
41A-90099-16	2-7-15 -57	REF
	2-7-16 -	1
41A-90099-160	2-7-16 -	1
41A-90099-162	2-7-14 -15	2
41A-90099-18	2-7-16 -	1
41A-90099-2	2-7-5 -	1
41A-90099-20	2-7-3 -	1
	2-7-6 -42	REF
41A-90099-202	2-7-5 -52	1
41A-90099-204	2-7-5 -46	1
41A-90099-206	2-7-3 -10	1
41A-90099-208	2-7-3 -16	1
41A-90099-210	2-7-3 -22	1
41A-90099-212	2-7-3 -28	1

PART NUMBER	FIG AND INDEX NO	QTY /AC
	2-7-16 -43	REF
41A-90099-214	2-7-16 - 1	1
41A-90099-216	2-7-16 -16	1
41A-90099-218	2-7-16 -29	1
41A-90099-22	2-7-3 -	1
41A-90099-220	2-7-3 -13	1
41A-90099-222	2-7-3 -19	1
41A-90099-224	2-7-3 -25	1
41A-90099-226	2-7-3 -31	1
41A-90099-228	2-7-16 - 8	1
41A-90099-230	2-7-16 -23	1
41A-90099-232	2-7-17 - 1	1
41A-90099-234	2-7-17 - 8	1
41A-90099-236	2-7-3 - 1	1
41A-90099-238	2-7-3 - 4	1
41A-90099-24	2-7-3 -	1
41A-90099-240	2-7-3 - 7	1
41A-90099-242	2-7-8 -21	1
41A-90099-244	2-7-8 -	2
41A-90099-246	2-7-8 -35	2
41A-90099-248	2-7-8 -43	2
41A-90099-250	2-7-8 -24	1
41A-90099-252	2-7-8 -	2
41A-90099-254	2-7-8 -39	2
41A-90099-256	2-7-8 -47	2
41A-90099-258	2-7-6 -26	1
41A-90099-26	2-7-3 -	1
	2-7-15 -55	REF
41A-90099-260	2-7-16 -36	1
41A-90099-262	2-7-14 -	2
41A-90099-28	2-7-3 -43	REF
	2-7-16 -	1
41A-90099-30	2-7-16 -	1
41A-90099-32	2-7-15 -58	REF
	2-7-17 -	1
41A-90099-34	2-7-17 -	1
41A-90099-36	2-7-3 -	1
41A-90099-38	2-7-3 -	1
	2-7-7 -27	REF
41A-90099-4	2-7-5 -	1
41A-90099-40	2-7-3 -	1
41A-90099-42	2-7-8 -	1
41A-90099-44	2-7-8 -	2
41A-90099-46	2-7-8 -	2
41A-90099-48	2-7-8 -	2
41A-90099-50	2-7-8 -	1
41A-90099-52	2-7-8 -	2
41A-90099-54	2-7-8 -	2
41A-90099-56	2-7-8 -	2
41A-90099-58	2-7-6 -	1
41A-90099-6	2-7-3 -	1
	2-7-5 -58	REF
	2-7-7 -28	REF
41A-90099-60	2-7-16 -	1
41A-90099-62	2-7-14 -	2
41A-90099-72	2-7-3 -	
41A-90099-74	2-7-3 -	
41A-90099-8	2-7-1 - 7	REF
	2-7-3 -	1
41A-90103	2-7-3 -	1
	2-7-3 -	1
	2-7-3 -	1
	2-7-3 -	1
	2-7-3 -	1
	2-7-3 -	1
	2-7-3 -	1
	2-7-5 -49	1
	2-7-5 -54	1
	2-7-6 -	1
	2-7-8 -	2
	2-7-8 -	2
	2-7-14 -16	4

PART NUMBER	FIG AND INDEX NO	QTY /AC
	2-7-16 - 4	1
	2-7-16 -11	1
	2-7-16 -38	1
	2-7-17 - 3	1
	2-7-17 -10	1
41A-90103-4	2-7-8 -	2
	2-7-8 -	2
41A-90151	2-7-2 - 2	REF
41A-90151-100	2-7-6 -15	4
41A-90151-51	2-7-6 -	1
41A-90151-55	2-7-6 -	1
41A-90151-806	2-7-6 -	1
41A-90151-808	2-7-6 -	
41A-90151-950	2-7-6 -	
41A-90152	2-7-6 -	2
41A-90152-2	2-7-6 - 1	2
41A-90153	2-7-6 - 3	2
41A-90154	2-7-6 -	2
41A-90154-2	2-7-6 -11	2
41A-90155	2-7-6 -10	1
41A-90156-1	2-7-6 -21	1
41A-90156-800	2-7-6 -20	1
41A-90157	2-7-6 -	2
41A-90157-2	2-7-6 -16	2
41A-90158	2-7-6 -35	2
41A-90159	2-7-6 - 6	AR
41A-90201	2-7-2 - 1	REF
	2-7-4 -	NP
	2-7-5 -	REF
41A-90201-84	2-7-5 -36	AR
41A-90201-93	2-7-5 - 7	4
41A-90201-94	2-7-4 -52	2
41A-90208-10	2-7-5 - 6	2
41A-90209-802	2-7-4 -	2
41A-90209-803	2-7-4 -	2
41A-90210-2	2-7-4 - 1	1
41A-90211	2-7-4 -	2
41A-90211-1	2-7-4 -	2
41A-90211-2	2-7-4 - 3	2
41A-90211-3	2-7-4 - 4	2
41A-90212	2-7-4 - 2	2
41A-90213	2-7-4 - 9	8
41A-90214	2-7-4 -	4
41A-90214-2	2-7-4 - 8	4
41A-90215	2-7-4 -	2
41A-90215-1	2-7-4 -	2
41A-90215-2	2-7-4 -	2
41A-90215-3	2-7-4 -	2
41A-90215-6	2-7-4 -13	2
41A-90215-7	2-7-4 -14	2
41A-90215-800	2-7-4 -	2
41A-90215-801	2-7-4 -	2
41A-90216	2-7-4 -12	4
41A-90217	2-7-4 -18	4
41A-90221-2	2-7-5 -20	2
41A-90221-4	2-7-5 -44	1
41A-90221-6	2-7-5 -43	1
41A-90222-2	2-7-5 -18	2
41A-90225	2-7-5 -22	2
41A-90226	2-7-5 -	1
41A-90226-2	2-7-5 -37	1
41A-90227	2-7-5 -	1
41A-90227-2	2-7-5 -34	1
41A-90228	2-7-5 -31	1
41A-90232	2-8-6 -61	REF
41A-90232-2	2-7-4 -16	4
41A-90233-2	2-4-4 -27	REF
	2-7-5 -32	1
41A-90236-4	2-7-6 -37	1
41A-90236-6	2-7-6 -36	1
41A-90326	2-7-4 -38	1
41A-90327	2-7-4 -36	1
41A-90328	2-7-4 -50	1
	2-8-6 -64	REF

PART NUMBER	FIG AND INDEX NO	QTY /AC
41A-90329	2-7-4 -	1
41A-90330	2-7-4 -48	1
	2-8-6 -62	REF
41A-90333	2-7-4 -29	1
41A-90334	2-7-4 -	1
41A-90334-2	2-7-4 -	1
41A-90335	2-7-4 -21	1
41A-90336-2	2-7-4 -30	1
41A-90336-8	2-7-4 -37	2
41A-90338	2-7-5 -25	1
41A-90339	2-7-5 -	1
41A-90340-10	2-7-4 -24	1
41A-90340-2	2-7-4 -26	1
41A-90340-4	2-7-4 -20	1
41A-90340-6	2-7-4 -22	1
41A-90340-8	2-7-4 -23	1
41A-90364	2-4-4 -22	1
41A-90367	2-7-5 -30	1
41A-90370	2-3-1 - 5	REF
	2-4-4 -	NP
41A-90371	2-4-4 -	1
41A-90371-2	2-4-4 - 7	1
41A-90372	2-4-1 - 5	REF
	2-4-4 -	1
41A-90372-2	2-4-4 - 5	1
	2-7-1 - 1	REF
41A-90373-2	2-4-4 - 1	1
41A-90374	2-4-4 -20	1
41A-90375	2-4-4 -17	1
41A-90376-2	2-4-4 -23	1
41A-90376-6	2-4-4 -21	1
41A-90377	2-4-4 -18	1
41A-90378	2-7-5 -59	REF
41A-90378-16	2-4-4 -15	1
41A-90378-20	2-4-4 -19	1
41A-90378-38	2-4-4 -14	1
41A-90378-4	2-4-4 -	1
41A-90378-800	2-4-4 -	1
41A-90378-850	2-4-4 -	1
41A-90379	2-4-4 - 3	1
41A-90380	2-4-4 - 9	1
41A-90403	2-7-1 - 5	REF
	2-7-2 -	1
41A-90403-2	2-7-2 - 4	1
41A-90404	2-7-1 - 6	REF
	2-7-7 -11	1
41A-90405-10	2-7-2 -43	1
41A-90405-12	2-7-2 -44	1
41A-90405-14	2-7-2 -45	1
41A-90405-16	2-7-2 -46	1
41A-90405-2	2-7-2 -	1
41A-90405-4	2-7-2 -	1
41A-90405-6	2-7-2 -	1
41A-90405-8	2-7-2 -	1
41A-90407	2-7-1 -10	REF
	2-7-2 -42	2
41A-90408	2-7-2 -39	4
41A-90410	2-7-2 -	NP
41A-90411	2-7-7 -12	1
41A-90412	2-7-7 -	1
41A-90412-2	2-7-7 - 4	1
41A-90413	2-7-2 -	NP
41A-90414	2-7-7 -	1
41A-90414-2	2-7-7 - 1	1
41A-90415	2-7-1 - 9	REF
	2-7-2 -22	1
	2-7-8 -65	REF
41A-90416	2-7-7 -	1
41A-90416-2	2-7-7 - 8	1
41A-90419	2-7-2 -	1
	2-7-8 -68	REF
41A-90419-2	2-7-2 -26	1
41A-90421	2-7-3 -	1
	2-7-3 -	1

PART NUMBER	FIG AND INDEX NO	QTY /AC
	2-7-5 -	1
	2-7-8 -	4
	2-7-8 -	4
	2-7-16 -	1
	2-7-16 -	1
	2-7-16 -	1
41A-90421-2	2-7-3 -30	1
	2-7-3 -33	1
	2-7-5 -47	1
	2-7-8 -36	4
	2-7-8 -40	4
	2-7-16 - 2	1
	2-7-16 - 9	1
	2-7-16 -17	1
41A-90422	2-7-2 -	2
	2-7-8 -67	REF
41A-90422-2	2-7-2 -32	2
41A-90424	2-7-2 -	1
	2-7-8 -69	REF
41A-90424-2	2-7-2 -29	1
41A-90425	2-7-1 - 8	REF
	2-7-2 -	1
	2-7-3 -41	REF
41A-90425-2	2-7-2 -17	1
41A-90426	2-7-2 -14	1
41A-90428	2-7-7 - 7	1
41A-90429-2	2-7-7 -	1
41A-90429-4	2-7-7 -	1
41A-90429-6	2-7-7 -19	1
41A-90429-8	2-7-7 -20	1
41A-90430-10	2-7-2 -49	2
41A-90430-12	2-7-2 -57	1
	2-7-15 - 6	1
41A-90430-14	2-7-15 -32	1
41A-90430-16	2-7-15 -	1
41A-90430-18	2-7-2 -18	1
41A-90430-2	2-7-7 -24	2
41A-90430-20	2-7-2 -27	1
41A-90430-22	2-7-2 -35	2
41A-90430-24	2-7-2 -30	1
41A-90430-26	2-7-15 -17	1
41A-90430-28	2-7-15 -24	1
41A-90430-30	2-7-8 -	2
41A-90430-32	2-7-8 -	4
41A-90430-34	2-7-8 -	2
41A-90430-4	2-7-2 -47	4
	2-7-7 -22	2
41A-90430-40	2-7-8 -	2
41A-90430-42	2-7-13 - 5	1
	2-7-13 - 9	1
41A-90430-44	2-7-13 - 7	1
41A-90430-46	2-7-8 -	2
41A-90430-6	2-7-7 -23	1
41A-90430-8	2-7-2 -55	2
	2-7-15 - 4	2
	2-7-15 -13	1
	2-7-15 -	1
41A-90431-2	2-7-7 -18	1
41A-90432	2-7-7 -	1
41A-90432-10	2-7-7 -15	1
41A-90435	2-7-2 - 3	REF
	2-7-7 -	NP
41A-90435-16	2-7-7 -17	AR
41A-90436	2-7-2 -23	1
	2-7-8 -66	REF
41A-90437	2-7-2 -	NP
41A-90438	2-7-2 -	NP
41A-90439	2-7-8 -46	2
	2-7-8 -50	2
	2-7-16 - 6	1
	2-7-16 -13	1
41A-90440	2-7-5 -53	1
	2-7-8 -28	2
	2-7-8 -32	2

PART NUMBER	FIG AND INDEX NO	QTY /AC
	2-7-16 -19	1
	2-7-16 -25	1
	2-7-16 -32	1
41A-90442	2-7-2 -	NP
41A-90443	2-7-2 -	1
	2-7-3 -40	REF
	2-7-6 -43	REF
41A-90443-2	2-7-2 -	1
41A-90443-4	2-7-2 - 9	1
41A-90444-2	2-7-2 -	4
41A-90444-4	2-7-2 -	1
	2-7-15 - 9	1
41A-90444-6	2-7-15 -20	1
41A-90445	2-7-2 -	2
	2-7-2 -59	REF
	2-7-15 -	2
	2-7-15 -56	REF
	2-7-16 -44	REF
41A-90445-2	2-7-2 -54	2
	2-7-15 - 3	2
41A-90446	2-7-2 -52	2
	2-7-15 - 1	2
41A-90447	2-7-2 -53	1
	2-7-15 - 2	1
41A-90448	2-7-2 -	1
	2-7-15 -	1
41A-90449	2-7-6 -	1
41A-90449-2	2-7-6 -27	1
41A-90451-10	2-7-2 -51	2
41A-90451-12	2-7-2 -21	1
41A-90451-8	2-7-15 -36	2
41A-90452	2-3-7 -	NP
41A-90452-2	2-3-7 -53	1
41A-90452-3	2-3-7 -	1
41A-90452-4	2-3-7 -54	1
41A-90453	2-7-8 -25	2
41A-90454	2-7-15 -10	2
41A-90455	2-7-2 -	NP
41A-90456	2-7-15 -	NP
41A-90457	2-7-15 -	1
41A-90457-2	2-7-15 -12	1
41A-90458	2-7-15 -	1
41A-90458-2	2-7-15 -15	1
41A-90459	2-7-15 -11	1
41A-90460	2-7-1 -20	REF
	2-7-15 -	1
41A-90461	2-7-15 -	NP
41A-90462	2-7-2 -34	4
41A-90463	2-7-15 -21	2
41A-90464	2-7-15 -22	1
41A-90465	2-7-15 -	1
41A-90465-2	2-7-15 -23	1
41A-90466	2-7-1 -21	REF
	2-7-15 -	1
41A-90467	2-7-15 -	NP
41A-90468	2-7-15 -44	1
41A-90469	2-7-16 -	1
41A-90469-2	2-7-16 -30	1
41A-90472	2-7-16 -31	2
41A-90552	2-7-15 -	NP
41A-90552-14	2-7-15 -35	8
41A-90552-2	2-7-1 -19	REF
	2-7-15 -	1
41A-90553	2-7-15 -33	1
41A-90554	2-7-15 -30	1
41A-90554-1	2-7-15 -31	1
41A-90555	2-2-3 -50	REF
	2-7-17 -31	1
41A-90567-3	2-7-8 -12	1
41A-90601	2-7-18 -	1
41A-90601-2	2-7-18 - 7	1
41A-90601-4	2-7-18 - 8	1
41A-90602	2-7-1 -14	REF
	2-7-9 -	2

PART NUMBER	FIG AND INDEX NO	QTY /AC
41A-90602-14	2-7-9 -37	2
41A-90602-26	2-7-9 -38	2
41A-90602-28	2-7-9 -39	2
41A-90602-6	2-7-9 -42	2
41A-90602-8	2-7-9 -43	2
41A-90603	2-2-3 -21	REF
41A-90603-2	2-7-18 - 6	2
41A-90603-800	2-7-18 -	NP
41A-90603-954	2-7-18 -	AR
41A-90604	2-7-18 -13	2
41A-90604-2	2-7-18 -	2
41A-90605	2-7-18 -14	2
41A-90606	2-7-18 -	2
41A-90607	2-7-1 -23	REF
	2-7-18 -	2
41A-90607-4	2-7-18 -19	2
41A-90608	2-2-3 -22	REF
	2-7-18 -	NP
41A-90609	2-7-18 -10	1
41A-90610	2-7-17 -34	1
41A-90610-1	2-7-17 -	1
41A-90611	2-7-17 -	1
41A-90611-2	2-7-17 -35	1
41A-90612	2-7-17 -	1
41A-90612-2	2-7-17 -41	1
41A-90613	2-7-17 -37	1
41A-90614	2-7-17 -39	1
41A-90651-800	1-1 - 9	REF
	2-1-2 - 3	REF
	2-7-8 -	NP
41A-90651-801	2-7-8 -	NP
41A-90651-84	2-7-8 -58	2
41A-90651-950	2-7-8 -19	AR
41A-90651-952	2-7-8 -	AR
41A-90652	2-7-1 -11	REF
	2-7-8 -	2
41A-90652-2	2-7-8 - 1	2
41A-90653	2-7-8 -	4
41A-90653-2	2-7-8 - 3	4
41A-90654-6	2-7-8 - 8	2
41A-90654-8	2-7-8 - 7	2
41A-90655	2-7-8 -	2
41A-90655-2	2-7-8 - 5	2
41A-90657	2-7-8 -	1
41A-90657-1	2-7-8 -	1
41A-90657-2	2-7-8 -11	1
41A-90658-2	2-7-8 -15	1
41A-90658-3	2-7-8 -16	1
41A-90658-800	2-7-8 -	1
41A-90658-801	2-7-8 -	1
41A-90659-2	2-7-8 -18	2
41A-90660-12	2-7-8 -60	2
41A-90660-4	2-7-8 -	2
41A-90661	2-1-3 -18	4
41A-90662	2-7-1 -12	REF
	2-7-8 -	2
41A-90663	2-7-8 -56	2
41A-90664	2-7-8 -55	2
41A-90701-800	2-1-8 -	REF
	2-7-9 -	NP
41A-90701-801	2-7-9 -	NP
41A-90703	2-1-8 -	1
41A-90703-1	2-1-8 -	1
41A-90703-2	2-1-8 - 6	1
41A-90703-3	2-1-8 -	1
41A-90707	2-1-8 - 3	REF
	2-7-9 -	NP
41A-90712	2-7-9 -	2
41A-90712-2	2-7-9 -14	2
41A-90717	2-7-9 -	NP
41A-90717-2	2-7-9 -26	2
41A-90718	2-7-9 -	2
41A-90718-2	2-7-9 -29	2
41A-90719	2-7-9 -33	2

PART NUMBER	FIG AND INDEX NO	QTY /AC
41A-90720	2-7-9 -30	2
41A-90720-2	2-7-9 -	2
41A-90721	2-7-9 -31	2
41A-90722	2-7-9 -	1
41A-90722-2	2-7-9 -23	1
41A-90725-12	2-7-9 -	2
41A-90725-14	2-7-9 -	2
41A-90725-16	2-7-9 - 6	2
41A-90725-6	2-7-9 - 7	2
41A-90726	2-7-9 -10	2
41A-90727	2-7-9 - 4	2
41A-90728	2-1-8 -	2
41A-90728-2	2-1-8 -11	2
41A-90729	2-7-9 - 2	2
41A-90730	2-7-9 -	2
41A-90730-2	2-7-9 - 1	2
41A-90731	2-7-9 -17	2
41A-90732	2-7-9 -12	2
41A-90733	2-7-18 - 4	1
41A-90733-2	2-7-18 - 2	1
41A-90734-6	2-1-8 -	2
41A-90734-8	2-1-8 - 4	2
41A-90751	2-3-1 - 7	REF
	2-7-10 -	NP
41A-90751-56	2-7-10 -49	1
41A-90752	2-7-10 -	REF
41A-90752-15	2-7-11 -	1
41A-90752-52	2-7-11 -	1
	2-12-11 -43	REF
41A-90752-804	2-7-11 -	NP
41A-90752-84	2-7-11 -	1
41A-90752-86	2-7-11 -	1
41A-90755-2	2-7-11 -23	1
41A-90755-4	2-7-11 -24	1
41A-90756	2-7-11 -13	1
41A-90757	2-7-11 -21	1
41A-90758	2-7-11 -20	1
41A-90759	2-7-11 -	1
41A-90759-2	2-7-11 -43	1
41A-90760	2-7-11 -46	1
41A-90761	2-7-11 -44	1
41A-90762-2	2-7-11 -17	1
41A-90765-22	2-7-11 -10	1
41A-90765-24	2-7-11 -11	1
41A-90765-26	2-7-11 - 7	2
41A-90765-62	2-7-11 - 3	2
41A-90765-70	2-7-11 - 8	1
41A-90765-76	2-7-11 - 5	1
41A-90765-78	2-7-11 - 6	1
41A-90765-802	2-7-11 - 1	1
41A-90766-6	2-7-11 -	1
41A-90766-8	2-7-11 -15	1
41A-90767	2-7-11 -	1
41A-90767-2	2-7-11 -14	1
41A-90768-8	2-7-12 -14	1
41A-90768-9	2-7-12 -	1
41A-90769	2-7-12 -	1
41A-90769-6	2-7-12 - 9	1
41A-90769-800	2-7-12 -	
41A-90770-6	2-7-12 -	1
41A-90770-8	2-7-12 - 6	1
41A-90771	2-7-12 - 5	1
41A-90772	2-7-11 - 2	1
41A-90773-10	2-5-1 -15	1
	2-7-10 -53	REF
41A-90776	2-7-10 - 3	1
41A-90777-4	2-7-10 - 2	1
41A-90777-6	2-7-10 -12	1
41A-90778-2	2-7-10 - 7	1
41A-90778-4	2-7-10 -	1
41A-90779	2-7-10 -	1
41A-90779-2	2-7-10 - 5	1
41A-90780	2-7-10 - 1	1
41A-90781	2-7-10 -	2

PART NUMBER	FIG AND INDEX NO	QTY /AC
	2-7-11 -52	REF
	2-7-12 -18	REF
41A-90781-2	2-7-10 -	2
41A-90781-4	2-7-10 -13	2
41A-90782	2-7-12 -11	1
41A-90785	2-7-10 -	REF
	2-7-12 -	NP
41A-90785-2	2-7-12 -	1
41A-90785-4	2-7-12 -16	REF
41A-90785-6	2-7-12 -	1
41A-90786-10	2-7-12 - 2	2
41A-90786-4	2-7-12 - 1	1
41A-90790	2-7-10 -50	1
	2-12-8 - 7	REF
41A-90851	2-3-1 - 9	REF
	2-7-13 -	NP
	2-8-11 -	REF
	2-12-23 -	REF
	2-14-4 -	REF
41A-90851-950	2-12-23 -14	1
41A-90852	2-3-1 - 8	REF
	2-7-14 -	NP
41A-90853-100	2-7-13 - 3	1
41A-90855	2-7-14 -	2
41A-90855-2	2-7-14 - 5	2
41A-90855-4	2-7-14 - 6	2
41A-90856-6	2-7-13 -	1
41A-90856-8	2-7-13 - 4	1
41A-90857-6	2-7-13 -	1
41A-90857-8	2-7-1 -17	REF
	2-7-13 - 8	1
41A-90858	2-7-13 -	1
41A-90858-2	2-7-13 -24	1
41A-90859	2-7-13 -	1
41A-90859-2	2-7-13 -41	1
41A-90859-8	2-7-13 -42	1
41A-90859-800	2-7-13 -	1
41A-90861	2-7-13 -39	1
	2-12-23 -24	REF
41A-90862-12	2-7-13 -19	1
41A-90862-14	2-7-13 -20	1
41A-90862-16	2-7-13 -21	1
41A-90862-802	2-7-13 -	1
41A-90864	2-8-11 -13	1
41A-90865	2-7-1 -18	REF
	2-7-14 -	1
41A-90865-2	2-7-14 -11	1
41A-90866	2-7-14 -12	2
41A-90867	2-7-14 - 9	2
41A-90868-2	2-7-14 - 1	1
41A-90868-5	2-7-14 -	1
41A-90868-7	2-7-14 -	1
41A-90869	2-7-14 -13	2
41A-90872-2	2-7-14 - 4	2
41A-90873	2-7-13 -38	1
	2-14-4 -35	REF
41A-90874-2	2-7-13 - 1	1
41A-90875	2-7-13 -13	1
41A-90876	2-7-13 -	2
41A-90876-2	2-7-13 -27	2
41A-90877	2-7-13 -12	1
41A-90878	2-7-13 -26	1
41A-90879	2-7-13 -15	1
41A-90880	2-7-13 -11	1
41A-90881	2-7-13 -17	2
41A-90882	2-7-13 -35	2
41A-90883	2-7-13 -14	1
41A-90884	2-7-13 -36	1
41A-90885	2-7-13 -33	1
41A-90886	2-7-13 -	1
41A-90886-10	2-7-13 -16	1
41A-90903-1	2-12-6 -	1
41A-90904-100	2-12-11 -	1
41A-90904-102	2-12-11 -	1

PART NUMBER	FIG AND INDEX NO	QTY /AC	PART NUMBER	FIG AND INDEX NO	QTY /AC	PART NUMBER	FIG AND INDEX NO	QTY /AC
41A-90904-104	2-12-11 -	1	41A-90904-3	2-12-9 -	2		2-12-23 -	NP
41A-90904-106	2-12-13 -32	1	41A-90904-30	2-12-6 -	1	41A-90957-1	2-12-2 -23	REF
	2-12-14 -54	1	41A-90904-300	2-12-11 -	1		2-12-23 -	REF
41A-90904-110	2-12-11 -	1	41A-90904-302	2-12-6 -	1	41A-90957-2	2-12-2 -24	REF
41A-90904-112	2-12-14 -61	1	41A-90904-304	2-12-6 -	1		2-12-23 -	REF
41A-90904-114	2-12-9 -55	1	41A-90904-306	2-12-23 -	1	41A-90962-1	2-12-2 - 8	REF
41A-90904-120	2-12-12 -40	1	41A-90904-314	2-12-9 -	1		2-14-2 -	NP
41A-90904-122	2-12-12 -34	1	41A-90904-316	2-12-9 -	1	41A-90963-1	2-13-4 -	NP
41A-90904-124	2-12-12 -35	1	41A-90904-339	2-12-9 -	2		2-14-2 -	REF
41A-90904-126	2-12-12 -36	1	41A-90904-340	2-13-4 -	1	41A-90964-1	2-12-2 -10	REF
41A-90904-128	2-12-12 -37	1	41A-90904-348	2-12-3 -	1		2-14-1 -	NP
41A-90904-130	2-12-12 -38	1	41A-90904-359	2-12-3 -	1	41A-90965-1	2-12-2 -19	REF
41A-90904-132	2-12-3 -	1	41A-90904-360	2-12-3 -	1		2-12-9 -	NP
41A-90904-136	2-12-23 -	1	41A-90904-366	2-12-9 -	2	41A-90966-1	2-12-2 -18	REF
41A-90904-14	2-12-6 -	1	41A-90904-367	2-12-9 -	2		2-12-9 -	NP
41A-90904-142	2-12-23 -	1	41A-90904-368	2-13-4 -	2	41A-90967-1	2-12-2 -26	REF
41A-90904-154	2-12-9 -49	1	41A-90904-369	2-12-9 -	2		2-12-25 -	NP
41A-90904-156	2-12-9 -50	1	41A-90904-371	2-12-9 -	2	41A-90969-1	2-12-2 -27	REF
41A-90904-158	2-14-2 -71	1	41A-90904-372	2-12-9 -	2		2-12-25 -	NP
41A-90904-16	2-12-6 -	1	41A-90904-38	2-12-6 -	1	41A-90970-1	2-12-2 -22	REF
41A-90904-160	2-14-2 -72	1	41A-90904-4	2-12-6 -	1		2-12-18 -	NP
41A-90904-164	2-12-9 -	1	41A-90904-40	2-12-6 -	1	41A-90971-1	2-12-2 -20	REF
41A-90904-166	2-12-18 -27	1	41A-90904-42	2-12-6 -	1		2-12-9 -	NP
41A-90904-168	2-12-18 -28	1	41A-90904-44	2-12-6 -	1		2-13-2 -	REF
41A-90904-170	2-12-3 -	1	41A-90904-479	2-12-9 -43	2	41A-90974-1	2-12-2 -21	REF
41A-90904-172	2-12-3 -	1	41A-90904-480	2-12-9 -44	2		2-12-18 -	NP
41A-90904-174	2-12-3 -	1	41A-90904-50	2-12-6 -	1	41A-90987-1	2-12-23 -	1
41A-90904-176	2-12-25 -11	1	41A-90904-52	2-12-6 -	1	41A-91000-1	2-12-14 -49	1
41A-90904-178	2-12-23 -	1	41A-90904-54	2-12-6 -	1		2-12-14 -55	1
41A-90904-18	2-12-6 -	1	41A-90904-56	2-12-6 -	1	41A-91000-2	2-12-14 -40	2
41A-90904-180	2-12-23 -	1	41A-90904-58	2-12-6 -	1	41A-91002-1	2-12-25 - 7	1
41A-90904-182	2-12-18 -22	1	41A-90904-60	2-12-6 -	1	41A-92000	2-3-11 - 1	REF
41A-90904-190	2-12-6 -	1	41A-90904-62	2-12-6 -	1		2-3-12 -	NP
41A-90904-192	2-12-18 -	1	41A-90904-64	2-12-6 -	1	41A-92001	2-3-11 - 2	REF
41A-90904-194	2-12-18 -	1	41A-90904-66	2-12-6 -	1	41A-92001-24	2-3-13 -34	1
41A-90904-196	2-12-23 -	1	41A-90904-68	2-12-6 -	1	41A-92001-800	2-3-13 -	NP
41A-90904-198	2-12-23 -	1	41A-90904-70	2-12-6 -	1	41A-92002	2-3-1 - 3	REF
41A-90904-2	2-12-6 -	1	41A-90904-72	2-12-13 -30	1		2-3-11 -	NP
41A-90904-20	2-12-6 -	1	41A-90904-74	2-12-13 -31	1	41A-92003	2-3-11 - 3	REF
41A-90904-200	2-12-23 -	1	41A-90904-76	2-12-14 -47	1		2-3-14 -	NP
41A-90904-202	2-12-23 -	1	41A-90904-78	2-12-14 - 4	1	41A-92003-54	2-3-14 - 4	1
41A-90904-204	2-12-23 -	1	41A-90904-80	2-12-6 -	1	41A-92004-802	2-3-16 -	1
41A-90904-206	2-12-23 -	1	41A-90904-82	2-12-23 -	1	41A-92004-804	2-3-16 -	
41A-90904-214	2-12-23 -	1	41A-90904-84	2-12-23 -	1	41A-92007	2-3-11 - 4	REF
41A-90904-216	2-12-6 -	1	41A-90904-86	2-12-23 -	1		2-3-15 -	NP
41A-90904-218	2-12-6 -	1	41A-90904-88	2-12-23 -	1	41A-92007-30	2-3-15 - 3	1
41A-90904-220	2-12-6 -	1	41A-90904-90	2-12-23 -	1	41A-92007-32	2-3-15 -17	1
41A-90904-222	2-12-6 -	1	41A-90904-92	2-12-23 -	1	41A-92007-34	2-3-15 -18	1
41A-90904-224	2-12-23 -	1	41A-90904-94	2-12-11 -	1	41A-92007-802	2-3-15 -	NP
41A-90904-230	2-12-11 -	1	41A-90904-96	2-12-11 -	1	41A-92007-804	2-3-15 -	NP
41A-90904-234	2-12-25 -15	1	41A-90904-98	2-12-11 -	1	41A-92007-806	2-3-15 -	NP
41A-90904-236	2-12-23 -	1	41A-90906-1	2-12-2 -11	REF	41A-92010-800	2-3-11 -16	1
41A-90904-238	2-12-23 -	1		2-12-13 -	NP		2-3-13 -44	REF
41A-90904-240	2-12-23 -	1		2-12-14 -	REF		2-3-15 -35	REF
41A-90904-242	2-12-9 -	1	41A-90906-2	2-12-14 -	1	41A-92011	2-3-12 -11	2
41A-90904-244	2-12-9 -	1	41A-90906-3	2-12-14 -	1	41A-92012	2-3-11 - 6	REF
41A-90904-246	2-12-6 - 8	1	41A-90906-4	2-12-14 -	1	41A-92012-800	2-3-16 -	NP
41A-90904-248	2-12-6 - 5	1	41A-90906-5	2-12-14 -	REF	41A-92016-2	2-3-13 -19	1
41A-90904-252	2-12-6 -14	1	41A-90906-9	2-13-4 -	1	41A-92021	2-3-12 -21	2
41A-90904-254	2-12-6 - 9	1	41A-90909-1	2-12-23 -	NP	41A-92023	2-3-12 -	2
41A-90904-258	2-12-6 -18	1	41A-90910-1	2-12-23 -25	1	41A-92023-2	2-3-12 - 4	2
41A-90904-26	2-12-6 -	1	41A-90911-1	2-12-23 -26	1	41A-92024	2-3-12 - 8	2
41A-90904-260	2-12-6 -12	1	41A-90922-1	2-12-2 -13	REF	41A-92025	2-3-12 -12	2
41A-90904-262	2-12-6 -15	1		2-12-12 -	NP	41A-92026	2-3-12 -10	2
41A-90904-266	2-12-3 -	1	41A-90927-1	2-12-23 -41	1	41A-92031	2-3-12 -17	1
41A-90904-268	2-12-3 -	1	41A-90931-1	2-12-2 -25	REF	41A-92032	2-3-12 -	3
41A-90904-270	2-12-3 -	1		2-12-23 -	1	41A-92032-2	2-3-12 - 1	3
41A-90904-274	2-12-9 -	2	41A-90946-1	2-12-14 -63	REF	41A-92033	2-3-12 -13	1
41A-90904-276	2-12-9 -	2	41A-90949-1	2-12-2 -15	REF	41A-92034	2-3-12 -24	2
41A-90904-28	2-12-6 -	1		2-12-23 -	NP	41A-92035-800	2-3-13 -38	1
41A-90904-284	2-12-23 -	1	41A-90950-1	2-12-23 -	1	41A-92036	2-3-13 -	1
41A-90904-294	2-12-6 -13	1	41A-90951-1	2-12-23 -	1	41A-92036-2	2-3-13 -12	1
41A-90904-296	2-12-6 -	1	41A-90951-2	2-12-23 -63	1	41A-92037-804	2-3-13 -18	1
41A-90904-298	2-12-11 -	1	41A-90954-1	2-12-2 -14	REF	41A-92040	2-3-13 - 1	2

PART NUMBER	FIG AND INDEX NO	QTY /AC
41A-92041	2-3-13 -	1
41A-92041-14	2-3-13 - 7	1
41A-92041-2	2-3-13 - 3	1
41A-92042	2-3-13 - 10	1
41A-92042-2	2-3-13 - 11	1
41A-92043	2-3-13 - 16	1
41A-92046	2-3-12 - 23	2
41A-92047	2-3-13 - 41	1
41A-92051	2-3-13 - 5	1
41A-92055-14	2-3-16 - 3	1
41A-92055-17	2-3-16 - 6	4
41A-92055-18	2-3-16 - 4	1
41A-92055-20	2-3-16 -	
41A-92055-802	2-3-16 -	1
41A-92056-4	2-3-16 - 11	1
41A-92056-8	2-3-16 - 10	1
41A-92056-802	2-3-16 -	1
41A-92057	2-3-14 - 10	1
41A-92059	2-3-14 - 1	1
41A-92063	2-3-14 - 14	1
41A-92066	2-3-14 - 16	1
41A-92067-800	2-3-15 -	1
	2-3-15 -	1
41A-92067-802	2-3-15 -	1
41A-92068	2-3-15 -	1
41A-92068-2	2-3-15 - 6	1
41A-92068-4	2-3-15 - 7	1
41A-92069-2	2-3-15 - 4	1
	2-3-15 - 19	1
41A-92070	2-3-15 - 14	1
	2-3-15 - 27	1
41A-92071	2-3-15 - 12	1
	2-3-15 - 25	1
41A-92072	2-3-15 -	1
41A-92072-2	2-3-15 - 21	1
41A-92072-4	2-3-15 - 22	1
41A-92073-2	2-3-15 - 9	1
	2-3-15 - 30	1
41A-92074-2	2-3-15 -	1
	2-3-15 - 24	1
41A-92074-4	2-3-15 - 11	1
41A-92075	2-3-11 - 5	REF
	2-3-15 -	NP
41A-92079	2-3-12 - 14	1
	2-3-13 - 45	REF
41A-92079-8	2-3-12 -	1
41A-92080-2	2-3-10 -104	REF
	2-3-12 - 19	2
41A-92080-4	2-3-12 - 20	2
41A-92090	2-3-1 - 4	REF
	2-3-17 -	NP
41A-92090-16	2-3-17 -	1
41A-92090-18	2-3-17 -	1
41A-92090-27	2-3-17 - 17	2
41A-92090-28	2-3-17 - 19	1
41A-92090-50	2-3-17 - 4	2
41A-92090-52	2-3-17 -	2
41A-92090-54	2-3-17 -	2
41A-92095-10	2-3-17 - 13	1
41A-92095-12	2-3-17 - 12	1
41A-92095-14	2-3-17 - 21	2
41A-92095-16	2-3-17 - 25	2
41A-92095-4	2-3-17 - 16	1
41A-92095-6	2-3-17 - 7	1
41A-92095-8	2-3-17 - 1	1
41A-92096	2-3-17 - 3	2
41A-92102	2-3-14 -	1
41A-92103	2-3-14 - 7	1
41A-92104	2-3-14 - 6	1
41A-92105	2-3-14 - 5	1
41A-92106	2-3-14 - 9	1
41A-92107	2-3-11 - 19	2
41A-92114-2	2-3-16 - 9	1
41A-92114-4	2-3-16 -	

PART NUMBER	FIG AND INDEX NO	QTY /AC
41A-92140-2	2-3-13 -29	1
41A-92140-802	2-3-13 -	1
41A-92141	2-3-13 -	1
41A-92141-2	2-3-13 -22	1
41A-92142	2-3-13 -30	1
41A-92143-2	2-3-13 -28	1
41A-92144	2-3-13 -24	1
41A-92145	2-3-13 -32	1
41A-92149-2	2-3-13 -31	1
41A-92154-2	2-3-12 -35	2
41A-92160-2	2-3-16 - 5	2
41A-95002	2-9-2 - 1	REF
	2-9-3 -	NP
41A-95200-2	2-9-5 -49	1
41A-95200-4	2-9-7 -16	1
41A-95201-10	2-9-5 -48	1
41A-95201-2	2-9-5 -47	1
41A-95202-2	2-9-5 - 1	1
	2-9-7 -51	REF
41A-95203	2-9-5 -50	1
	2-10-1 -24	REF
41A-95207	2-10-1 -18	2
41A-95208-4	2-9-5 - 7	1
41A-95208-800	2-9-5 -16	1
41A-95208-801	2-9-5 -17	1
41A-95211	2-9-5 -10	1
41A-95212-54	2-9-5 -32	AR
41A-95212-56	2-9-5 -34	AR
41A-95212-57	2-9-5 -	AR
41A-95212-58	2-9-5 -35	AR
41A-95212-60	2-9-5 -36	AR
41A-95212-62	2-9-5 -37	AR
41A-95212-64	2-9-5 -38	AR
41A-95212-66	2-9-5 -33	AR
41A-95212-800	2-9-1 -10	REF
	2-9-5 -	1
41A-95212-801	2-9-5 -	1
41A-95212-802	2-9-5 -	1
41A-95212-803	2-9-5 -	1
41A-95212-804	2-9-5 -25	1
41A-95212-805	2-9-5 -	1
41A-95212-806	2-9-5 -26	1
41A-95212-807	2-9-5 -	1
41A-95214	2-9-1 -11	REF
	2-9-5 - 4	1
41A-95216	2-9-7 -18	1
41A-95217-2	2-9-7 -19	1
41A-95217-4	2-9-7 -20	1
41A-95218-10	2-9-6 -29	1
41A-95218-12	2-9-6 -31	1
41A-95218-14	2-8-8 -46	REF
	2-9-6 - 5	1
41A-95218-16	2-6-8 -14	REF
41A-95218-26	2-9-6 - 8	1
41A-95218-30	2-9-6 - 3	1
	2-9-6 -10	1
41A-95218-32	2-9-6 -18	1
41A-95218-36	2-9-6 - 1	1
41A-95218-38	2-9-6 - 6	1
41A-95218-6	2-9-6 -14	1
41A-95218-8	2-9-6 -22	1
41A-95219-10	2-3-7 -45	1
41A-95219-12	2-3-7 -	1
41A-95220	2-9-5 -63	REF
	2-9-7 - 7	1
41A-95222	2-9-7 -13	1
41A-95700	2-9-5 -	2
41A-95700-2	2-9-5 -27	2
41A-95700-4	2-9-5 -28	2
41A-96201-16	2-9-8 - 4	1
41A-96201-18	2-9-8 - 1	1
41A-96201-2	2-9-8 - 3	1
41A-96201-4	2-9-8 - 2	1
41A-96202	2-3-9 -77	REF

PART NUMBER	FIG AND INDEX NO	QTY /AC
41A-96202-2	2-3-9 -	NP
41A-96202-4	2-3-6 -	NP
41A-96202-42	2-3-6 -11	2
41A-96202-44	2-3-6 -12	2
41A-96202-46	2-3-9 -71	1
41A-96202-48	2-3-6 -10	1
	2-9-1 -28	REF
	2-9-7 -48	REF
41A-96202-50	2-3-6 -13	1
41A-96202-52	2-3-6 -14	1
41A-96202-54	2-3-6 -16	1
41A-96202-56	2-3-6 -15	1
41A-97200	2-9-3 - 8	1
41A-97201-10	2-9-3 -13	1
41A-97201-12	2-9-3 -15	1
41A-97201-3	2-9-3 -16	1
41A-97201-4	2-9-3 -18	1
41A-97201-6	2-9-3 -12	1
41A-97201-8	2-9-3 -21	1
41A-97202	2-9-3 -26	2
41A-97203-2	2-9-1 - 4	REF
	2-9-3 -24	2
41A-97204	2-9-3 -25	2
41A-97205	2-9-1 - 3	REF
	2-9-3 -17	2
41A-97206	2-9-1 - 5	REF
	2-9-3 -29	1
41A-97207	2-9-3 - 2	1
41A-97700	2-9-1 -15	REF
	2-9-6 -	1
41A-98206	2-5-1 -26	REF
	2-9-1 -27	REF
	2-9-8 -20	1
41A-98207-2	2-9-7 -37	1
41A-98207-4	2-9-6 -39	REF
	2-9-7 -42	1
41A-98207-800	2-9-4 -25	1
41A-98208-2	2-9-8 -15	1
41A-98208-20	2-9-8 -13	1
41A-98208-4	2-9-7 -50	REF
	2-9-8 -12	1
41A-98209	2-9-8 -18	1
41A-98210	2-9-4 -45	REF
	2-9-8 - 9	1
41A-98212-18	2-9-4 -18	1
41A-98212-36	2-9-7 -34	1
41A-98213	2-9-8 -22	1
41A-99000	2-3-1 -18	REF
	2-5-5 -	NP
41A-99005	2-3-19 - 8	REF
	2-5-6 -	NP
41A-99200	2-5-5 -	NP
41A-99200-10	2-5-5 - 2	1
41A-99200-2	2-5-5 - 1	1
41A-99201-4	2-5-5 -16	2
41A-99202-2	2-5-1 - 6	REF
	2-5-5 -27	1
41A-99202-24	2-5-5 -14	3
41A-99202-26	2-5-5 -15	3
41A-99202-28	2-5-5 -17	1
41A-99202-4	2-5-1 -25	REF
	2-5-5 -20	1
41A-99202-42	2-5-5 -21	1
41A-99202-44	2-5-5 -	1
41A-99202-50	2-5-5 -	1
41A-99202-6	2-5-1 -24	REF
	2-5-5 - 6	1
41A-99202-60	2-5-5 -	
41A-99204-2	2-5-5 - 5	1
41A-99206	2-5-5 -23	1
41A-99206-20	2-5-5 -25	2
41A-99207	2-5-1 -	1
41A-99208	2-5-1 -17	1
	2-5-6 -25	REF

PART NUMBER	FIG AND INDEX NO	QTY /AC
41A-99209-12	2-5-6 - 2	4
41A-99209-18	2-5-6 - 8	1
41A-99209-19	2-5-6 -	1
41A-99209-2	2-5-6 -	1
41A-99209-24	2-5-6 -10	2
41A-99209-26	2-5-1 -23	REF
	2-5-6 -13	1
41A-99209-3	2-5-6 -	1
41A-99209-4	2-5-6 - 4	1
41A-99209-40	2-5-6 -17	2
41A-99209-44	2-5-6 -18	2
41A-99209-46	2-5-6 -22	1
41A-99209-5	2-5-6 -	1
41A-99209-50	2-5-6 - 3	1
41A-99209-51	2-5-6 -	1
41A-99209-52	2-5-6 - 1	1
41A-99209-53	2-5-6 -	1
41A65209-22	2-6-7 -39	1
41A90603-14	2-7-18 -	2
41G-27200-2	2-6-10 -	2
41G-27200-3	2-6-10 -	2
41G-27200-62	2-6-10 - 2	2
41G-27200-63	2-6-10 -	2
41G-27200-810	2-6-1 -40	REF
	2-6-9 -17	REF
	2-6-10 -	NP
	2-6-11 -22	REF
41G-27200-811	2-6-9 -18	REF
	2-6-10 -	NP
	2-6-11 -	REF
41G-27201-12	2-6-10 -23	1
41G-27201-4	2-6-10 -22	1
41G-27201-5	2-6-10 -	1
41G-27202	2-6-10 -25	1
41G-27202-1	2-6-10 -	1
41G-27206-2	2-6-10 - 6	4
41G-27207	2-6-10 - 4	2
41G-27210	2-6-10 - 3	2
41G-27210-1	2-6-10 -	2
41G-27211	2-6-10 -38	2
41G-27212-3	2-6-10 - 1	2
	2-6-10 -	2
41G-27212-4	2-6-10 -	2
41G-27212-5	2-6-10 -	2
41G-27220	2-6-10 - 9	2
41G-27220-1	2-6-10 -	2
41G-27221	2-6-10 - 8	2
41G-27221-1	2-6-10 -	2
41G-27222	2-6-10 - 7	2
41G-27222-1	2-6-10 -	2
41G-27223-10	2-6-10 -14	2
41G-27223-12	2-6-10 -15	2
41G-27223-16	2-6-10 -19	2
41G-27223-2	2-6-10 -17	2
41G-27223-4	2-6-10 -12	2
41G-27225-800	2-6-10 -	2
41G-27226	2-6-10 -42	1
41G-27227	2-6-10 -46	2
41G-27228	2-6-10 -43	2
41G-27305-24	2-6-1 -41	REF
	2-6-10 -32	1
41G-27305-810	2-6-10 -	1
41G-27307-4	2-6-10 -10	8
41G-27330-2	2-6-10 -45	2
41G-27332	2-6-10 -37	2
41G-27334-10	2-6-10 -36	2
41G-27335	2-6-10 -	2
41G-27407	2-6-10 -27	2
41G-35032	2-3-5 -	2
	2-3-5 -	2
	2-3-5 -	4
41G-35043	2-3-5 -39	2
	2-6-10 -51	REF
41G-35043-2	2-3-5 -	2

PART NUMBER	FIG AND INDEX NO	QTY /AC
41G-65009	2-6-7 - 7	1
41G-65010	2-6-7 - 4	2
	2-6-7 - 8	1
41G-65011	2-6-7 -23	1
	2-6-9 - 9	REF
41G-65011-1	2-6-7 -	1
41G-65016	2-6-7 -44	1
41G-65017	2-6-7 -45	1
41G-65022	2-6-9 - 2	2
41G-65023	2-6-9 -10	2
	2-6-13 - 8	2
41G-65024	2-6-9 - 5	2
41G-65025	2-6-9 -13	2
41G-90010-2	2-7-6 -23	1
41G-90010-4	2-7-6 -24	1
42990-00	2-12-22 -90	1
	2-12-22 -96	1
	2-12-25 -21	2
42991-00	2-12-22 -91	1
	2-12-22 -97	1
	2-12-25 -20	2
42FW624	2-5-2 -	4
42FW820	2-3-19 -	2
42FW918	2-3-19 -	2
4352D4	2-16-3 -22	4
44-5144-2	2-12-7 -59	1
44-62799	2-6-2 -21	1
	2-6-2 -26	1
	2-6-3 -28	2
44-A17830	2-3-7 -	2
44-A17831	2-3-7 -72	2
44-A17832	2-3-7 -73	2
44-A17833	2-3-7 -71	2
44-A17834	2-3-7 -70	2
44-A17835	2-3-7 -	2
44-A17836	2-3-7 -74	2
442-4-6-8	2-15-2 -22	15
443E4-2-6	2-7-11 -41	2
445-4-6-2-8	2-15-1 -33	6
4500-14	2-12-14 -32	1
453-16-10	2-6-5 -10	1
4553	2-12-3 -	1
456672-1	3-6 -20	1
456675-1	3-1 -	1
456676-1	3-6 -21	1
456678-1	2-17-1 -14	1
456680-1	2-17-1 -	2
456681-1	2-17-1 -	1
456682-1	2-17-1 -	1
456684-1	2-17-1 -	2
456685-1	2-17-1 -10	2
456686-1	3-1 -11	1
456687-1	3-1 -	1
456688-1	3-1 -	1
457-370	2-6-11 -10	2
4571	2-12-1 - 1	REF
	2-12-3 -12	1
458-4SS27-6	2-3-16 -22	1
	2-3-16 -29	2
45958-10	2-12-1 -12	REF
	2-12-10 -18	1
46-196	2-13-2 -	2
4601101-1	2-13-6	NP
4601102-1	2-13-2 -	REF
	2-13-6 - 1	1
4601103-1	2-13-6 - 1	1
4601104-1	2-13-6 - 4	1
4601105-1	2-12-6 -	REF
	2-13-6 - 8	1
4601106-1	2-13-6 -12	1
4601107-1	2-13-6 -22	1
	2-14-2	REF
4601107-2	2-14-2 -87	1
4601107-3	2-14-2 -88	1

PART NUMBER	FIG AND INDEX NO	QTY /AC
4601108-1	2-13-6 - 22	1
4601109-1	2-12-15 -	REF
	2-13-6 - 29	1
4601112-1	2-13-6 - 53	1
4601113-1	2-13-6 - 55	1
4601114-1	2-13-6 - 56	1
4601115-1	2-13-6 - 57	1
4601123-1	2-13-6 - 20	1
4601125-1	2-13-6 - 15	1
4601126-1	2-13-6 - 26	1
4601139-1	2-13-6 - 24	1
4601143-1	2-14-2 - 85	1
4601144-1	2-14-2 - 86	REF
4601145-1	2-12-9 -	REF
	2-13-6 - 29	1
4601146-1	2-13-6 - 58	1
4601147-1	2-12-6 -101	1
	2-12-6 -111	1
4601147-2	2-13-6 - 68	1
4601147-5	2-13-6 - 53	1
4601147-6	2-13-6 - 4	2
4601147-7	2-12-6 -104	1
4601147-8	2-12-6 -100	1
4601147-9	2-12-6 -106	1
4601148-1	2-13-6 - 69	1
4601148-2	2-13-6 - 70	1
4601148-3	2-13-6 - 71	1
462W4096	2-8-12 - 27	2
462W4097	2-8-14 - 3	2
462W4098	2-8-10 - 77	1
472	2-5-4 - 42	AR
475C62NXW	2-6-1 - 25	REF
	2-6-5 - 38	1
4N49	2-13-4 - 57	1
4P10-12	2-6-1 - 34	REF
	2-6-7 - 9	1
5-102	2-3-11 -	2
5006305	2-4-7 - 46	2
5006306-2	2-4-7 -	2
50064-2	2-8-8 -	1
50065-1	2-8-8 -	1
501-100	2-9-7 - 45	1
501-1361-03	2-12-9 - 21	1
501-250	2-9-5 - 5	1
	2-9-7 -	1
	2-9-7 - 31	1
50175-200	2-6-2 - 58	REF
	2-6-5 - 19	3
502563-24-6/64	2-5-1 - 17	1
5034	2-7-10 - 25	1
504-350	2-9-7 - 46	1
	2-9-8 - 27	REF
5071-1-1/AIC-504	2-12-14 - 23	REF
	2-13-4 - 12	1
508-7545-504	2-14-1 - 51	1
511-038	2-13-2 -	1
52-1650-02	2-3-6 -	8
	2-4-11 -	4
522-2447-552	2-13-4 - 9	1
52869-150	2-5-1 - 19	1
52LH2935-048	2-3-6 -	12
52N1610-02	2-12-16 -	4
5335-1	2-12-18 - 16	1
	2-12-20 - 7	1
5511-2	2-7-10 - 25	1
555748-1	2-17-2 -	2
555749-1	2-17-2 -	1
555750-1	2-17-2 -	1
555751-1	3-7 -	1
555792-1	3-7 -	1
555793-1	3-4 -	1
555794-1	2-17-1 -	1
555795-1	3-3 -	1
555797-1	3-7 -	1

PART NUMBER	FIG AND INDEX NO	QTY /AC
555798-1	3-7 -11	1
555800-1	3-7 -12	1
555801-1	3-7 -15	1
555802-1	3-7 -	1
555803-1	3-7 -	1
555804-1	3-2 - 2	1
555805-1	3-2 - 3	1
555815-1	3-8 -20	1
555816-1	3-8 -18	1
555817-1	3-8 -22	1
555818-1	3-8 -	1
555822-1	3-8 -	1
555823-1	3-8 -23	1
555824-1	3-8 -24	1
555825-1	3-8 -27	1
555826-1	3-8 -29	1
555827-1	3-8 -31	1
555828-1	3-8 -30	1
555829-1	3-8 -28	1
555830-1	3-4 -	2
	3-6 - 1	2
555830-10	3-4 -	1
	3-4 -	1
	3-6 -10	1
555830-11	3-4 -	1
	3-6 -11	1
555830-12	3-4 -	2
	3-6 -12	2
555830-13	3-4 -	1
	3-6 -13	1
555830-14	3-4 -	3
	3-6 -14	1
555830-15	3-4 -	1
	3-6 -	1
555830-2	3-4 -	1
	3-6 - 2	1
555830-3	3-4 -	1
	3-4 -	1
	3-4 -	1
	3-6 - 3	1
555830-4	3-4 -	1
	3-6 - 4	1
555830-5	3-4 -	1
	3-6 - 5	1
555830-6	3-4 -	2
	3-6 - 6	2
555830-7	3-4 -	1
	3-6 - 7	1
555830-8	3-4 -	1
	3-4 -	1
	3-6 - 8	1
555830-9	3-4 -	1
	3-6 - 9	1
555833-1	3-3 -	1
555834-1	3-3 -33	1
555835-1	3-3 -39	8
555836-1	3-3 -42	2
555837-1	3-3 -44	1
555837-2	3-3 -	1
555838-1	3-3 -36	2
555839-1	3-3 -37	2
555840-1	3-3 -	2
555841-1	3-3 -46	1
555842-1	3-3 -34	2
555843-1	3-3 -35	2
555846-1	3-7 -	1
555852-1	3-4 -	1
555853-1	3-4 -	1
555854-1	3-4 -	1
555855-1	3-4 -	1
555856-1	3-6 -	1
555857-2	3-7 -	1
555861-1	2-17-2 -	2
555866-1	3-5 -	1

PART NUMBER	FIG AND INDEX NO	QTY /AC
555867-1	3-5 -	1
555868-1	3-7 - 26	1
555870-1	3-4 -	1
555871-1	3-4 -	1
555872-1	3-4 - 1	1
555872-2	3-4 - 4	1
555872-3	3-4 - 17	1
555872-4	3-4 - 30	1
555873-1	3-4 -	1
555874-1	3-4 -	1
555875-1	3-8 -	1
555876-1	2-17-2 -	1
555877-1	2-17-2 -	1
577-100	2-12-6 - 42	1
	2-12-7 -114	REF
57989-10-1078SH	2-6-5 -	
57989-12-1078	2-6-5 -	
58078	2-5-3 - 2	1
583-3/4D1	2-9-5 - 56	2
59911	2-8-6 - 37	1
6-403	3-1 - 17	1
600-015-10-0S	2-6-2 -	4
	2-6-3 -	2
	2-6-3 -	4
601-100-SH	2-9-7 - 44	1
601-350SH	2-9-7 - 47	REF
	2-9-8 - 8	1
601002-20D0240	2-6-1 - 29	REF
60115M	2-8-8 - 18	1
602260-1	3-3 - 9	1
602261-1	3-3 -	1
602262-1	3-3 - 56	1
602263-1	3-3 - 57	2
602264-1	3-3 -	1
602265-1	3-3 - 48	1
602266-1	3-3 - 47	1
602267-1	3-3 - 50	2
602268-1	3-3 - 53	1
602268-2	3-3 - 55	1
602269-1	3-3 - 54	1
602270-1	3-3 - 60	2
602270-2	3-3 -	2
602271-1	3-3 - 49	1
602272-1	3-3 - 58	2
602273-1	3-3 -	1
602274-1	3-3 - 25	1
602275-1	3-3 -	1
602276-1	3-3 - 24	2
602277-1	3-3 - 26	4
602278-1	3-3 -	1
602279-1	3-3 -	4
602280-1	3-3 - 32	1
602281-1	3-5 -	1
602281-2	3-5 - 1	1
602281-3	3-5 - 2	2
602282-1	2-17-2 - 2	2
602282-2	2-16-3 - 38	1
	2-17-2 - 3	2
602282-3	2-17-2 - 10	1
602282-4	2-17-2 - 13	1
602283-1	3-5 -	1
602284-1	3-6 - 19	1
602287-1	3-4 - 47	1
602288-1	3-4 - 43	1
602289-1	3-4 - 48	1
602290-1	3-4 - 45	1
602291-1	3-4 - 44	1
602293-1	2-17-2 - 1	1
602294-1	2-17-2 - 9	1
602295-1	3-8 -	1
602296-1	3-8 - 33	1
602297-1	3-8 - 34	1
602298-1	3-8 -	1
602299-1	3-8 - 36	1

PART NUMBER	FIG AND INDEX NO	QTY /AC
602300-1	3-8 -35	1
602301-1	3-8 -37	1
602302-1	3-8 -32	1
602306-1	3-7 -	1
613111A-334-Z	2-5-1 -	1
	2-9-8 -	1
	2-9-8 -	REF
615-075	2-13-4 -	1
61919-2	2-14-2 -43	1
	2-14-2 -64	1
620-042-4	2-8-12 -	1
	2-8-12 -	1
622-6812-001	2-13-2 -73	1
622-6812-003	2-13-2 -	1
	2-13-6 - 9	1
622-6813-001	2-12-14 -64	REF
	2-13-4 -32	REF
	2-13-6 -23	1
622-6813-003	2-13-4 -	REF
622-6820-001	2-13-2 -75	REF
	2-13-6 - 5	1
622-7210-002	2-13-2 -74	REF
	2-13-6 -10	1
623-9614-001	2-13-6 - 8	1
63224A	2-8-8 -19	1
634-4193-004	2-13-3 -22	3
6350-1	2-1-4 -78	REF
	2-8-13 - 1	2
63X1327	2-7-6 - 4	2
63X565	2-7-5 -39	1
63X700	2-7-7 - 9	1
646672-2	2-11-2 - 5	REF
6500-17	2-4-3 - 1	1
6500-7	2-4-1 - 1	REF
653278	2-13-2 -78	REF
	2-14-3 - 5	1
656767	2-14-4 -14	1
661102B	2-12-12 -16	1
	2-12-12 -17	1
664543	2-12-1 -35	REF
	2-12-23 -22	REF
	2-14-4 -13	1
67-06C20-37S	2-13-5 - 4	1
673447	2-12-1 - 6	REF
	2-13-2 -79	REF
6770-3	2-8-1 - 4	REF
	2-8-4 - 1	1
6805-1-1/4	2-17-2 - 4	4
	2-17-2 - 8	2
	2-17-2 -11	1
	2-17-2 -14	1
682565-1	2-9-1 -24	REF
	2-9-7 -	1
683204	2-9-7 -28	1
6900-1	2-8-12 -	
6930A/16-21B	2-13-2 -	1
7000	2-5-1 -	AR
	2-10-1 -	AR
700040	2-8-8 -25	1
700070	2-5-1 -28	REF
	2-6-1 -24	REF
	2-6-5 -29	1
7000G	2-5-5 -11	AR
	2-5-5 -29	AR
70096	2-6-5 -32	1
701004	2-8-9 -53	1
	2-8-9 -61	1
702000	2-8-9 -52	1
	2-8-9 -60	1
706643-802CF-018	2-13-4 -	1
706643-802CF004/ ARC164	2-12-14 -24	REF
	2-13-4 -13	1
70775-1	2-7-4 -58	REF

PART NUMBER	FIG AND INDEX NO	QTY /AC
	2-8-1 - 8	REF
	2-8-6 -	1
70775-2	2-8-6 - 8	1
70776	2-8-1 - 7	REF
	2-8-6 - 1	2
70777	2-7-4 - 57	REF
	2-8-1 - 9	REF
	2-8-6 - 15	4
710043-350-13	2-9-8 - 6	1
712329-15-14	2-9-4 - 11	2
712329-2-14	2-9-4 - 26	6
	2-9-8 - 28	REF
712359-501	2-9-7 - 33	1
737TW	2-9-7 - 29	2
738-14-8	2-15-1 - 30	2
7402	2-5-1 -	AR
	2-5-5 -	AR
	2-5-5 -	AR
751S34-8	2-9-4 - 21	1
755-13-2-8	2-6-6 - 26	2
755-6-2-8	2-6-4 - 29	2
755-6-2-8HT	2-8-14 - 17	8
	2-8-14 - 21	6
755SS20-2-8SF	2-6-6 - 59	1
	2-6-6 - 66	3
755SS23-2-8SF	2-6-6 - 63	1
782-1-6HT	2-8-14 - 24	2
7C11-4	2-12-22 - 8	99
	2-12-22 - 16	10
	2-12-25 - 54	150
	2-12-25 - 59	1
	2-12-25 - 60	13
	2-12-25 - 64	14
	2-12-25 - 73	2
8	2-16-4 -	2
80	2-3-9 - 50	AR
	2-3-9 - 55	AR
80-21N320	2-3-10 -	AR
80-320	2-3-10 -107	AR
	2-16-2 - 27	8
	2-16-2 - 28	8
8001	2-3-7 - 76	1
800111	2-8-8 -	1
8015	2-12-3 -	1
802-110	2-3-13 - 42	1
8022Y0C	2-3-15 - 34	1
808-187	2-13-2 -	4
81-22-20	2-14-2 - 9	1
810-515	2-13-1 - 4	3
810-568	2-13-1 - 3	3
810191	2-8-8 -	1
8140344-1	2-14-2 -	1
8140344-2	2-14-2 - 12	1
82-856	2-13-3 - 17	1
82-F1113	2-13-2 - 68	1
	2-13-2 - 70	1
82-F1115	2-13-2 - 69	1
823-17	2-9-8 - 7	2
8240304-1	2-16-1 - 44	2
8240305-1	2-16-1 - 45	2
8240306	2-16-1 -	2
8240310-1	2-16-1 - 46	2
826RNMR	2-16-1 - 19	2
8300/300	2-5-1 - 33	REF
	2-12-22 - 2	1
8406F	2-8-10 - 87	1
8406L	2-8-10 - 95	1
8432-1-1/2	2-17-1 - 9	2
	2-17-1 - 13	1
8432-1-1/4	3-7 - 35	1
85020-2	2-9-1 - 23	REF
	2-9-7 - 10	1
8595409-1	2-16-3 - 37	1
859A6TT	2-6-8 - 5	2

PART NUMBER	FIG AND INDEX NO	QTY /AC
869A12TT	2-6-7 - 21	2
8749K-13	2-12-29 - 12	2
8916K703	2-12-11 - 28	2
	2-12-29 - 13	2
8916K759	2-12-27 - 6	1
	2-14-1 - 40	1
8925056-1	3-9 - 23	2
8927831-1	2-13-2 - 87	1
8940039	2-16-3 - 36	1
8940042	2-16-3 -	2
9-0810-11	3-9 - 16	3
9-0810-21	3-4 - 46	1
9-1010-11	3-8 - 13	1
90000	2-14-3 - 6	1
901-275-1-5ASH	2-4-3 - 19	1
9040243-1	2-17-1 - 18	1
9040244-1	2-17-1	1
9040245-1	2-17-1	1
9040246-1	2-17-1	1
9040247-1	2-17-1	1
905-125	2-13-2 -144	12
9220-4249	2-12-27 - 22	2
9223-4833	2-14-6 - 7	2
9228-4424	2-12-27 - 23	2
9235-4842	2-14-6 - 6	1
9330-4026	2-12-27 - 37	2
9385	2-12-3 - 15	1
939-100	2-13-2 -	8
	2-13-2 -	2
	2-13-2 -	2
	2-13-2 -	2
	2-13-4 -	2
	2-13-4 -	2
	2-13-4 -	1
939-200	2-13-4 -	2
	2-13-4 -	2
94-3-1	2-3-16 - 1	1
	2-3-17 - 29	REF
94-5-1A	2-3-11 - 17	1
	2-3-11 - 20	2
	2-3-12 - 37	REF
	2-3-16 - 47	REF
9470K61	2-9-5 - 2	1
	2-9-5 - 8	2
95-41-52-B6-57145	2-13-4 - 24	1
	2-14-2 - 78	REF
9533231	2-4-1 - 12	REF
9533247	2-4-1 - 2	REF
	2-4-3 - 20	1
9535-21-813-8521	2-16-4 - 75	2
9535-21-813-8544	2-1-6 - 10	2
9555A	2-12-5 - 18	2
	2-12-5 - 22	2
960870	2-11-1 - 1	2
985367-4D	2-6-13 - 5	2
990100-3	2-16-3 - 34	1
9911401001-1	2-12-13 - 34	1
9911401002-1	2-12-13 - 36	1
A-1410-6	2-11-1 -	1
A-6745C-24	2-14-5 - 2	1
A1037-012-3	2-9-3 - 27	2
A120-129	2-12-14 -	1
A13A2	2-14-2 - 15	1
A3135-017-24A	2-12-11 -	37
	2-16-1 -	10
	2-16-1 -	8
A3235-020-24A	2-1-6 -	84
A3235SS020	2-1-6 -	8
A4174-24C	2-12-7 -	1
A451-2	2-14-2 -	1
A4A1B1-071	2-1-6 - 28	1
A4A1B1-100	2-1-6 - 29	1
A50M6-4	2-12-29 - 20	1

PART NUMBER	FIG AND INDEX NO	QTY /AC
	2-14-2 - 28	1
A5506	2-8-5 - 10	3
	2-8-16 - 4	2
A6745B24	2-12-29 -	1
A6745C24	2-14-1 - 20	1
A6815C24	2-14-2 - 16	1
	2-14-2 -	8
A6912-832-1	2-1-8 - 38	1
A702AP	2-12-18 -	1
A7165-1	2-12-11 - 30	3
	2-12-14 - 37	3
A7165-1-327	2-7-11 - 48	2
	2-12-11 - 42	REF
	2-12-29 - 10	1
A848KBH	2-12-6 - 7	1
AA1801-1	2-3-13 - 9	2
AA224-1	2-7-17 - 36	3
AA401-1	2-7-11 -	1
AA521	2-7-11 -	1
AA607-2	2-3-13 - 8	2
AA607-3	2-3-13 - 15	1
AA6344	2-7-9 - 24	1
AB648	3-8 - 19	1
ABMM-4	2-16-5 - 8	1
AC106-1P	2-14-2 - 26	1
	2-14-6 - 15	REF
AC356-518	2-3-5 - 37	25
	2-3-5 -	6
	2-3-6 - 23	4
	2-3-6 -	4
	2-3-6 -	8
	2-3-6 -	12
	2-3-6 -	12
	2-3-7 - 31	10
	2-3-7 -	4
AD521SD	2-13-2 -114	2
ADB4V	2-1-8 - 5	2
	2-4-5 - 8	2
	2-4-6 - 7	2
	2-4-6 - 12	2
	2-7-11 -	2
ADB8V	2-1-4 - 36	2
ADD3721R12	2-16-3 -	2
ADNE4JW	2-7-8 - 61	2
ADNE6JW	2-8-13 - 2	1
ADNEL4J	2-7-8 - 57	2
	2-7-8 - 62	2
AE1000612B0090	2-9-6 - 26	1
AE1000612E0210	2-9-6 - 24	1
AE1000616E0144	2-15-1 - 45	4
AE1000616E0150	2-15-1 - 38	2
AE1000616E0154	2-15-1 - 42	1
AE1000616E0160	2-15-1 - 40	5
AE1000616E0180	2-15-1 - 37	1
AE1002208E0045	2-3-16 - 17	1
AE1002208E0063	2-3-16 - 20	1
AE1002208E0076	2-3-16 - 12	2
AE1002208E0090	2-5-4 - 9	1
	2-5-4 - 11	1
AE1002208E0243	2-3-16 - 32	1
AE1002208E0452	2-3-16 - 33	1
	2-16-3 - 30	1
AE1002208G0160	2-5-3 - 46	1
AE1002256E0047	2-4-7 - 8	2
AE1002256E0073	2-8-13 - 17	2
AE1002256E0076	2-8-12 - 47	2
AE1002256E0084	2-8-12 - 31	2
AE1002256E0086	2-8-12 - 37	2
AE1002256E0114	2-8-12 - 58	2
AE1002256E0120	2-8-13 - 12	2
AE1002256E0134	2-8-12 - 61	2
AE1002256E0135	2-8-12 - 34	2
	2-8-12 - 40	2
AE1002256E0164	2-8-12 - 55	2

PART NUMBER	FIG AND INDEX NO	QTY /AC
AE1002256E0200	2-8-3 -29	2
AE1002256E0220	2-8-3 -25	1
AE1002256G0130	2-8-14 -28	1
AE1002256G0150	2-8-14 -29	1
AE1002256G0172	2-8-14 -	2
AE1002256G0233	2-8-10 -36	1
AE1002352E0460	2-3-16 -34	1
	2-16-3 -	1
AE1002359E0146	2-3-16 -35	1
AE1002359E0174	2-5-4 -21	1
AE1002406E0120	2-4-3 -11	1
AE1002406E0145	2-4-3 - 3	1
AE1002406G0224	2-8-14 - 9	2
AE1002415E0104	2-8-12 -52	2
AE1010119E0140	2-11-1 -62	1
AE1011105E0160	2-4-7 -10	2
AE1204-2-231	2-9-7 - 2	2
AE1680E0087-180	2-3-16 -18	1
AE1826E0115-090	2-4-3 -14	1
AE300270-4A	2-14-2 - 7	1
AE320-2C	2-12-1 -25	REF
	2-14-3 -13	1
AE322-3B	2-12-3 -46	REF
	2-14-3 -10	2
AE340-2B	2-14-1 -54	1
	2-14-7 -13	REF
AE3402B	2-14-1 -32	1
AE341-7C	2-14-1 -29	1
	2-14-7 -12	REF
AE342-4-B	2-14-2 -11	2
AE346-2A	2-14-2 -20	1
AE355-2A	2-14-2 - 8	2
AE355-3A	2-14-2 -	2
AE409-5A	2-11-1 -80	2
	2-16-4 -77	REF
AE6665018E0102	2-8-12 -69	2
AE6665018E0180	2-8-12 -28	2
AE701-4	2-6-12 - 8	1
AE7010000E0120	2-6-5 -50	1
	2-12-18 -41	REF
AE7010000E0230	2-5-4 -16	1
AE7010000E0270	2-5-4 -15	1
AE7010010E0135	2-8-6 -50	4
AE7010130M0220	2-6-5 -22	1
AE7010200E0106	2-5-4 -13	1
AE7010200E0220	2-5-4 -14	1
AE7010200E0230	2-5-4 -12	1
AE7010200G0184	2-5-4 -20	1
AE7010200N0240	2-6-6 -62	1
AE7013033G0280	2-5-4 -38	1
AE705363-1	2-6-5 -56	REF
	2-6-6 -49	1
AER35866-502	2-11-1 -13	1
AERO-T114-40022-1	2-16-5 - 3	1
AERO-T114001	2-16-5 -	1
AERO-T114007	2-16-5 - 2	1
AJ-A4N-176	2-12-1 -27	REF
	2-12-6 -10	3
	2-12-18 -23	1
ALPPH-T6-2	2-3-14 -	2
ALPPH-T8-2	2-3-14 -	4
AM1655	2-1-3 -32	2
	2-4-2 -34	REF
AMS3783	2-5-6 -21	1
AN111-4	3-3 -51	2
AN122694	3-3 -14	2
AN122735	3-1 - 7	1
AN123907	2-9-7 -	2
AN150254	3-7 - 7	2
AN150279	3-5 - 3	4
AN150280	3-7 -10	2
AN173H11A	2-1-9 - 9	4
AN206DSP4	2-1-4 -58	6

PART NUMBER	FIG AND INDEX NO	QTY /AC
AN227-10-6	2-9-5 - 41	2
AN227-10BM6	2-12-13 - 5	2
AN227-6	2-16-2 -	4
AN227-7	2-16-2 -	4
AN227-8	2-16-2 -	4
AN227-9	2-16-2 -	4
AN229-2AS32-II	2-16-2 -	1
AN229-2AS43-II	2-16-2 -	1
AN23-8A	2-16-4 - 20	4
AN276-6	2-7-13 - 23	6
AN3-10	2-3-9 -	
AN3-10A	2-7-13 - 40	3
AN3-11A	2-14-1 - 12	3
AN3-13A	2-9-5 - 23	5
AN3-15A	2-16-4 - 52	24
AN3-16	2-9-6 - 20	4
AN3-16A	2-16-4 - 53	8
AN3-20A	3-1 - 9	7
AN3-23A	2-12-7 -108	2
AN3-3	2-16-4 - 13	2
AN3-3A	2-3-2 - 25	25
AN3-4	2-6-10 - 13	8
AN3-4A	2-3-10 - 94	15
AN3-5	2-7-13 - 34	6
	2-14-5 - 28	4
AN3-5A	2-4-7 - 4	12
AN3-6	2-8-10 - 92	6
AN3-6A	2-7-18 - 11	3
AN3-7A	2-4-4 - 2	18
AN3025-600	2-12-1 - 28	REF
	2-12-18 - 25	1
AN3033-14	2-12-1 - 40	REF
	2-12-23 - 15	1
AN3033-15	2-12-23 - 16	1
AN310-3	2-3-9 -	
AN310-4	2-1-7 -	29
AN310-5	2-4-9 -	4
AN310-8	2-4-2 - 20	2
AN3111-2	2-12-7 -	4
AN3115-1	2-15-2 - 2	1
AN3116-2	2-12-17 - 19	1
AN3129-4523	2-1-6 - 37	REF
AN315-3R	2-12-23 -	1
	2-12-23 -	1
AN315-4R	3-3 -	2
AN315-8R	3-3 -	2
AN315C7R	3-3 -	1
AN316-4R	2-3-4 -	20
AN316-5R	2-7-15 -	2
AN316-6R	2-3-14 -	3
AN320-10	2-4-2 -	4
AN320-12	2-1-2 -	2
AN320-14	2-1-2 -	2
AN320-3	2-1-8 -	52
AN320-4	2-1-4 -	141
AN320-5	2-2-3 -	11
	2-4-9 - 40	REF
	2-7-6 -	16
AN320-6	2-1-8 -	17
AN320-7	2-3-6 -	12
AN320-8	2-4-2 -	12
	2-8-14 -	2
AN320-9	2-1-2 -	2
AN3249-1	2-12-6 - 52	1
AN3249-2	2-12-6 - 53	1
AN340-8	2-9-7 -	4
AN340DD516	2-3-6 -	24
AN345-10	2-3-21 -	6
AN363C1032	2-3-4 -	4
AN364-720	2-6-10 - 11	8
AN380C2-2	2-16-5 - 7	2
AN385-1-12	2-7-2 -	4
AN385-30-6	2-7-10 -	8
AN385-30-7	2-7-9 - 9	8

PART NUMBER	FIG AND INDEX NO	QTY /AC
AN385A3P12	2-7-4 - 10	16
AN386-1-11A	2-7-4 - 17	8
AN386-1-12A	2-7-5 - 23	8
AN386-1-13	2-7-6 - 22	4
AN386-1-13A	2-7-2 - 50	8
AN386-1-14A	2-7-5 - 33	2
AN386-1-15A	2-7-5 - 21	8
AN386-2-14A	2-3-5 - 26	8
AN386-2-15A	2-7-7 - 26	2
AN386-2-16	2-7-17 - 28	4
AN386-2-16A	2-7-7 - 13	4
AN386-2-18A	2-7-4 - 7	8
AN3C10A	3-4 - 67	2
AN3C3A	2-6-5 - 4	25
AN3CH20A	2-6-5 - 35	4
AN3H4A	2-16-4 - 36	4
AN4-10A	3-3 - 45	8
AN4-11A	2-3-3 - 15	6
AN4-12A	2-3-3 - 16	8
AN4-13A	2-3-6 - 54	4
AN4-14A	3-1 - 21	4
AN4-15A	2-9-7 - 3	4
AN4-17	2-4-8 - 27	2
AN4-21A	2-6-10 - 48	2
AN4-24	2-7-6 -	
AN4-25A	2-3-8 - 18	2
AN4-30A	2-3-9 - 78	1
AN4-4A	2-7-9 - 28	2
AN4-5	2-7-13 - 37	2
AN4-5A	2-16-5 - 17	3
AN4-6A	2-6-2 - 23	32
AN4-7A	2-16-4 - 11	6
AN415-2	2-12-5 - 6	4
AN42B24A	2-7-4 - 45	1
AN42B3A	2-3-17 - 23	1
AN43B15	2-3-14 - 15	1
AN486-4	2-3-14 - 11	1
AN490HT8P	2-7-10 - 14	2
AN5-26A	2-16-4 - 60	2
AN500A10-20	2-3-11 - 21	4
AN500A10-4	2-3-11 - 18	2
AN500A8-5	2-7-17 - 21	2
AN500A8-8	2-12-6 - 39	1
AN500C4-8	2-12-17 - 74	4
AN501A10-10	2-3-12 - 25	4
AN501A10-5	2-16-3 - 14	4
AN501A10-6	2-4-7 - 12	6
AN501A10-7	2-4-2 - 8	8
	2-4-3 - 32	REF
AN501A10-8	2-12-6 - 44	1
AN501A6-4	2-15-2 - 7	4
AN501AD10-8	2-7-5 - 8	4
AN502-10-4	2-7-6 - 34	2
AN502-10-8	2-13-2 -	8
AN502-416-10	2-6-8 - 3	2
AN507-1032R6	2-6-3 - 36	4
AN507-440R7	2-7-18 - 3	2
AN507-832R16	2-16-4 - 45	4
AN507-832R7	2-12-12 - 6	21
AN5070DD632R8	2-14-3 - 3	4
AN507C1032R20	2-6-5 - 8	2
AN509-10R10	2-12-7 -121	4
	2-16-2 - 31	22
AN515-5R12	3-4 -	1
AN515-6R6	2-16-1 - 13	4
AN515-6R8	3-7 - 14	6
AN515-8R6	2-16-1 - 6	37
AN515-8R7	2-16-1 -	
	2-16-3 - 27	6
AN515-8R8	2-16-1 - 2	8
AN515PB6R14	2-14-1 -	4
AN515PB6R8	2-13-4 -	2
AN515PB8R10	2-15-1 -	16
AN520-10R9	2-3-16 -	2

PART NUMBER	FIG AND INDEX NO	QTY /AC
AN520C10R10	2-6-5 -11	2
AN520C10R7	2-6-3 -29	2
AN520PB10R12	2-10-1 -11	10
AN530-10R20	2-9-5 -	1
AN530-10RF6	3-1 -	4
AN530-2-6	2-7-11 -	2
AN530-2R4	3-8 -	4
AN530-6R4	2-9-5 -43	4
AN530-8R8	2-15-2 -	2
AN535-2-3	3-1 -	8
AN535-2-4	3-3 -	4
AN5534-2	2-14-4 - 5	1
AN565A4-3	2-7-11 -	1
AN565A428H9	2-3-5 -13	8
AN565A820H8	2-3-7 -75	2
AN565B6H2	3-4 -50	1
AN565C2H3	2-16-3 -15	2
AN565D1032H4	2-16-4 -	2
AN565D1032H9	3-8 -15	2
AN565E524H6	3-1 - 5	1
AN565F1032H4	2-1-4 - 8	8
AN565F428H3	2-4-2 -16	4
AN565F428H4	2-1-4 - 9	6
AN5800-1	2-16-1 -36	2
AN5816-2	2-1-6 -39	REF
	2-15-2 - 1	1
AN5839-2	2-14-2 -31	3
AN5DD14A	3-1 -12	6
AN6-15A	2-14-1 -16	4
AN6-5A	3-3 -13	1
AN6003T12A	2-11-1 -70	1
	2-11-1 -76	2
	2-16-3 -32	2
AN6011-18	2-11-1 -81	REF
AN6011-1B	2-11-2 - 6	REF
	2-14-2 -25	1
	2-14-6 -14	REF
AN6015-2	2-11-1 - 7	2
AN6201-1	2-8-4 -33	1
	2-8-15 -30	1
	2-8-15 -35	REF
AN6270-6-0160	2-6-13 - 9	2
AN6289-4D	2-9-6 -	1
AN6289-J4	2-3-16 -27	1
AN6289D4	2-4-3 -	39
AN6289D6	2-8-4 -	12
AN6289D8	2-8-9 -	5
AN6290-4	2-9-6 -	1
AN7-13A	3-3 -11	1
AN735D12	2-12-24 - 6	2
AN735D16	2-6-6 -25	1
AN735D6	2-1-4 -18	1
AN735DC20	2-6-6 -75	2
AN735DC24	2-9-4 -35	2
AN735DC28	2-9-4 -36	2
AN735DC32	2-9-4 -42	10
AN737RM46	2-5-6 -16	2
AN737TW107	2-6-2 -43	8
	2-6-3 -64	REF
AN737TW22	2-6-6 - 6	24
AN737TW24	2-5-4 -35	8
AN737TW26	2-5-4 -39	21
AN737TW30	2-9-7 -41	2
AN737TW34	2-6-6 -15	4
AN737TW34-38	2-9-5 -60	4
AN737TW46	2-5-5 -18	10
	2-6-3 -60	REF
	2-6-3 -65	REF
	2-6-4 - 9	21
AN737TW56-66	2-9-4 -12	26
AN737TW58	2-4-3 - 6	15
AN737TW66	2-9-5 -	10
AN737TW74-91	2-9-4 -27	21
AN737TW98-114	2-9-7 -36	1

PART NUMBER	FIG AND INDEX NO	QTY /AC
AN742-28	2-15-1 -26	2
AN742-3	2-16-4 -19	4
AN742-3C	2-11-1 -11	2
AN742-4	2-3-17 -15	AR
AN742-8	2-1-3 -64	2
AN742D10	2-10-1 -10	6
AN742D4	2-8-3 -34	15
AN742D6	2-1-4 -19	3
AN742D8	2-10-1 - 6	10
AN743-12	2-3-7 -32	1
	2-8-16 - 3	1
	2-12-7 -70	5
AN743-13	2-3-7 - 6	18
AN775-4D	2-9-3 -11	3
AN776-4D	2-9-3 -10	3
AN780-3	2-11-1 -45	1
AN785-3	2-11-1	1
	2-11-1	1
	2-11-1	1
	2-11-1	1
	2-11-1	2
	2-11-1	2
	2-11-1	1
AN795-3	2-11-1 - 9	2
AN8-12A	3-3 -43	2
AN8-17A	3-3 -41	2
AN800-3	2-11-1	1
	2-11-1	1
	2-11-1	2
	2-11-1	2
	2-11-1 -	2
	2-11-1	1
	2-11-1	2
	2-11-1	1
	2-11-1	2
	2-11-1	1
	2-11-1	2
	2-11-1	1
	2-11-1	2
AN8008D13	2-14-1 -13	4
AN801D16	2-6-1 -17	REF
	2-6-4 -10	1
AN804-4D	2-15-1 -51	1
AN804D4	2-9-3 -14	4
AN804D6	2-15-1 -12	1
AN805-3	2-11-1	1
	2-11-1	1
	2-11-1	2
	2-11-1	2
	2-11-1 -	2
	2-11-1	1
	2-11-1	2
	2-11-1	1
	2-11-1	2
	2-11-1	1
	2-11-1	2
	2-11-1	1
	2-11-1	2
AN814-4D	2-8-13 - 5	4
AN815-10D	2-6-6 -50	2
AN815-12D	2-6-7 -30	4
AN815-16	2-5-5 -12	1
AN815-16D	2-6-7 -16	3
AN815-20D	2-6-6 -61	2
AN815-3	2-16-3 -	1
AN815-4	2-5-4 -22	2
	2-8-15 -19	1
AN815-4C	2-3-16 -23	1
AN815-4D	2-6-5 -14	8
AN815-5D	2-11-1 -51	1

PART NUMBER	FIG AND INDEX NO	QTY /AC
AN815-6	2-8-15 -12	1
	2-8-15 -20	1
AN815-6D	2-6-7 -35	7
	2-6-13 -13	2
	2-6-13 - 7	2
	2-15-1 -14	1
AN815-8	2-5-5 -13	2
AN815-8D	2-6-12 - 2	8
AN816-3B	2-11-1 -46	2
AN816-4D	2-15-1 -41	4
AN816-5D	2-11-1 -63	1
AN816-6-6D	2-6-13 -20	1
	2-6-13 -14	1
AN816-6D	2-6-13 -14	1
AN818-16	2-5-5 -	1
AN818-20D	2-6-4 -	1
AN818-3	2-11-1	2
	2-11-1	2
	2-11-1 -	2
AN818-4D	2-5-4 -	7
AN818-6D	2-5-4 -	3
AN818-8	2-5-5 -	2
AN818-8D	2-6-12 -	1
AN824-16D	2-9-6 - 2	2
AN824-4	2-8-15 - 7	1
AN824-4D	2-15-1 - 6	3
AN824-5D	2-11-1 -64	1
AN824-6	2-8-15 - 5	1
AN824-6D	2-6-7 -41	4
AN832-20D	2-6-6 -68	1
AN832-3	2-11-1 -55	1
AN832-4	2-5-4 -10	1
AN832-4D	2-6-12 -	2
AN832-4J	2-3-16 -26	1
AN832-4S	2-3-16 -14	1
AN832-5D	2-11-1 -54	1
AN832-6D	2-6-8 - 9	2
AN833-10D	2-6-6 -	1
AN833-16D	2-9-6 - 7	1
AN833-4D	2-6-5 -37	4
	2-9-6 -23	1
	2-9-6 -27	1
	2-9-6 -30	1
AN833-4S	2-3-16 -13	1
AN833-6D	2-5-4 - 4	2
AN833-8D	2-6-11 - 1	2
	2-6-12 -17	1
AN837-4	2-5-4 - 2	6
AN837-4D	2-15-1 - 8	1
AN837-6D	2-15-1 -18	1
AN837-8	2-5-5 -	1
AN842-16D	2-9-5 -55	2
AN893-12D	2-8-9 -64	1
AN893-13D	2-8-10 -96	2
AN893-2	2-4-3 - 8	1
AN894D4-3	2-3-11 -15	2
	2-9-6 -38	REF
AN900-24	2-6-11 -18	1
AN901-4A	2-9-3 -	5
AN909B24	2-6-11 -17	1
AN911-3D	2-6-13 -13	1
AN912-2	2-6-13 -18	1
AN912-2D	2-6-13 -11	1
AN916-6D	2-15-1 -50	2
AN917-1	2-11-1 -44	1
AN917-3D	2-6-13 -12	1
AN919-16D	2-6-7 -29	2
AN919-21D	2-9-6 - 4	2
AN919-6D	2-15-1 -23	3
AN919-7D	2-6-13 -11	2
AN924-10D	2-6-6 -	1
AN924-16D	2-9-6 -	1
AN924-20D	2-6-6 -	1
AN924-3D	2-11-1 -	1

PART NUMBER	FIG AND INDEX NO	QTY /AC
AN924-4	2-5-4 -	12
AN924-4D	2-4-3 -	73
AN924-4S	2-3-16 - 16	2
AN924-5D	2-11-1 -	1
AN924-6	2-5-4 -	28
AN924-6D	2-6-5 -	11
AN924-8	2-8-10 -	2
AN924-8D	2-6-12 -	2
AN929-16	2-9-6 - 34	1
AN929-4D	2-6-12 - 29	1
AN929A4	2-9-3 - 30	4
AN929A6	2-6-8 - 10	3
AN935-04	2-13-2 -143	12
AN935-10	2-13-2 -	2
AN935-816	3-3 -	2
AN935-8L	2-9-7 -	2
AN936-B8	2-9-7 -	1
AN936B10	2-7-18 -	3
AN937-6D	2-6-7 - 33	1
AN937D6	2-6-8 - 6	1
AN938-12D	2-6-7 - 27	2
AN938-4C	2-3-16 - 21	1
AN938D4	2-15-1 - 24	2
AN938D6	2-8-4 - 23	2
AN938J4	2-3-16 - 28	1
AN939D4	2-8-3 - 20	1
AN948RE3H5	2-7-10 - 15	2
AN960-10	2-3-4 -	4
	2-3-12 -	160
	2-12-25 -	AR
	2-16-3 -	
	2-16-4	47
AN960-10L	2-1-3 -	380
	2-13-2 -	1
	2-14-1 -	13
	2-14-5 -	8
	2-15-1 -	70
AN960-3	3-5 -	6
AN960-4	2-12-25 -	6
AN960-416	2-3-12 -	55
	2-8-15 -	AR
	2-16-5 - 18	20
AN960-416L	2-1-8 -	37
	2-8-15 -	AR
	2-9-7 -	9
AN960-4L	2-12-27 -	8
AN960-516	2-3-12 -	15
AN960-516L	2-3-13 -	3
AN960-6	2-12-11 -	6
AN960-616	2-3-12 -	19
AN960-616L	2-4-7 -	12
AN960-6L	2-1-7 -	13
	2-8-5 -	AR
	2-12-6 -	8
AN960-716	2-4-3 -	9
AN960-716L	2-4-11 -	2
AN960-8	2-3-9 -	79
AN960-816	2-1-2 -	4
	2-6-10 -	AR
AN960-816L	2-4-2 -	6
	2-7-11 -	AR
AN960-8L	2-3-20 -	66
AN960-916L	2-8-14 -	2
AN960-PD816	2-8-14	2
AN960C10	2-3-9 -	44
	2-12-7 -	3
	2-12-7 -	4
AN960C10L	2-3-9 -	58
AN960C416	2-3-20 -	20
AN960C416L	2-3-6 -	12
	2-5-6 - 6	AR
	2-8-13 -	2
AN960C516	2-3-20 -	8
AN960C616	2-3-15 - 29	1

PART NUMBER	FIG AND INDEX NO	QTY /AC
	2-8-13 -	2
AN960C8	2-5-5 -	6
AN960C8L	2-3-9 -	12
AN960C916L	2-4-7 -22	2
AN960D-6L	2-14-1 -	4
AN960D10	2-3-6 -	61
AN960D10L	2-2-2 -	218
AN960D2	2-12-13 -	6
AN960D4016L	2-3-9 -	1
AN960D416	2-2-1 -	346
AN960D416L	2-3-10 -	12
AN960D4L	2-12-13 -	9
AN960D516	2-3-5 -	89
AN960D6	2-12-3 -	6
AN960D616	2-2-1 -	12
AN960D616L	2-3-15 -32	1
AN960D6L	2-12-5 -	101
	2-14-2 -	12
AN960D716	2-4-3 -	1
AN960D8	2-3-6 -	36
AN960D816L	2-13-4 -	AR
AN960D8L	2-1-3 -	321
AN960DB	2-12-3 -	4
AN960JD10L	2-1-8 -	168
AN960JD416	2-2-1 -	8
AN960JD416L	2-1-7 -	20
AN960JD516	2-2-3 -	2
AN960JD516L	2-2-3 -	2
AN960JD6L	2-1-7 -	26
AN960JD8L	2-3-21 -	25
AN960KD-10L	2-8-16 -	6
AN960KD10L	2-12-9 -	35
AN960KD10LL	2-12-9 -	6
AN960KD416L	2-12-6 -	8
AN960KD4L	2-12-14 -	16
AN960KD6	2-12-9 -	6
AN960KD8L	2-12-6 -	12
AN960OD10L	2-12-3 -	9
AN960PD10	2-1-3 -	158
	2-2-4 -	AR
	2-2-4 -	AR
	2-3-2 -	738
AN960PD1016	2-7-6 -	2
AN960PD10L	2-1-3 -	814
	2-13-6 -	REF
	2-13-6 -	REF
	2-14-4 -	17
	2-16-4 -	AR
AN960PD1216	2-6-12 -	3
AN960PD2	2-16-1 -	6
AN960PD2116	2-9-6 -	1
AN960PD4	2-7-11 -	10
AN960PD416	2-1-3 -	154
	2-4-10 -	AR
	2-6-5 -	187
AN960PD416L	2-1-3 -	AR
	2-1-7 -	4
	2-1-7 -	AR
	2-1-8 -	18
	2-4-10 -	AR
	2-6-5 -	42
	2-7-5 -	AR
	2-7-7 -	21
AN960PD4L	2-7-12 -	4
AN960PD516	2-1-3 -	
	2-2-3 -	38
AN960PD516L	2-1-3 -	
	2-2-3 -	8
AN960PD6	2-4-11 -	8
AN960PD616	2-1-3 -	11
	2-4-7 -43	AR
	2-7-2 -	9
AN960PD616L	2-7-13 -	2
AN960PD6L	2-4-6 -	24

PART NUMBER	FIG AND INDEX NO	QTY /AC
AN960PD716	2-3-6 -	89
AN960PD716L	2-4-11 -	AR
AN960PD8	2-3-4 -	107
AN960PD816	2-7-2 -	6
AN960PD816L	2-7-19 -	AR
	2-16-4 -	4
AN960PD8L	2-1-8 -	13
	2-3-15 -	AR
	2-3-17 -	109
AN960PD916	2-1-2 -	38
AN960XD416	2-4-4 -	1
AN970-3	2-16-4 -	4
AN970-4	2-3-13 -	1
AN970-5	2-8-12 -17	1
AN975-3	2-3-5 -	62
AR3-4	2-7-10 -16	6
AS151-18CAP1826A	2-3-20 -12	1
AS4580/2	2-9-3 -19	3
AS5071/ARN	2-13-2 -12	1
AS5084/ARN508	2-13-2 -15	2
ASH564B-6	2-12-1 - 7	REF
	2-12-3 -25	2
AT256A/ARC	2-13-2 -10	1
AT640A/ARN	2-13-2 -13	1
ATLAS 7 BLACK	2-14-7 -	AR
AV16B1692D	2-6-1 -23	REF
	2-6-5 -23	1
	2-12-8 -68	REF
AV16B1692DSB	2-6-12 -22	2
AV16E1274	2-6-1 -38	REF
	2-6-8 - 2	1
	2-12-8 -69	REF
AVL45-040	2-13-3 -26	2
B4	2-7-2 -33	1
	2-7-6 -28	2
	2-7-15 -26	1
B529	2-12-1 -44	REF
	2-12-3 - 2	1
	2-12-18 - 1	REF
B530	2-12-1 -45	REF
	2-12-18 - 3	REF
B531	2-12-1 -45	REF
	2-12-20 - 2	1
B532	2-12-1 -47	REF
B538DD	2-7-8 - 2	4
	2-7-8 - 4	8
	2-7-8 - 6	4
	2-7-8 -17	4
	2-7-12 - 7	2
	2-7-12 -10	2
	2-7-13 - 6	2
	2-7-13 -10	2
B539DD	2-7-4 -11	16
B540DD	2-7-2 -56	4
	2-7-15 - 5	4
	2-7-15 -14	2
	2-7-15 -16	2
	2-7-15 -25	2
	2-7-15 -34	2
B542DD	2-7-2 -48	8
	2-7-5 -11	2
	2-7-5 -16	2
	2-7-5 -35	1
	2-7-5 -38	1
	2-7-7 -21	4
	2-7-10 - 6	1
	2-7-10 - 8	1
B543DD	2-1-8 -12	2
B64-CB-10	2-13-2 -20	4
	2-13-2 -21	4
B6602AC	2-14-2 -	2
B6610C	2-14-2 -	2
	2-14-2 -	2

PART NUMBER	FIG AND INDEX NO	QTY /AC
	2-14-2 -	2
B6611C	2-14-2 -	1
	2-14-2 -	1
	2-14-2 -	2
B7669-3	2-12-16 -	1
B7669-4	2-12-16 -	1
BLC3TA09S	2-3-6 - 79	2
BR4	2-7-3 -	
	2-7-3 -	
	2-7-5 -	
	2-7-8 -	
BR4H	2-7-3 -	30
BR8-1	2-12-7 -122	1
BS10370K1105	2-16-2 -	6
BS10412K1105	2-16-2 -	6
BS16506K1105	2-3-9 - 52	8
BUR610-2	2-5-3 -	1
C100994-1	2-8-12 - 8	2
C101040	2-3-12 - 26	2
C101073	2-14-2 - 29	1
C10117-1	2-12-3 -	1
C5287/ARN504V	2-12-14 - 12	REF
	2-13-4 - 11	1
C600-A4N	2-12-6 - 19	1
C6280P/APX	2-13-4 - 14	1
C6280P/APX77	2-12-14 - 25	REF
C63B51600-1	3-1 - 2	1
C63B51600-2	3-1 - 6	1
C63B51601-1	3-1 - 10	1
C63B51602-1	3-1 - 3	1
C63B51608-1	3-8 - 5	1
C63B51609-1	3-8 - 11	1
C63B51611-1	3-8 - 4	1
C63B51612-1	3-8 - 7	1
C63C51599-1	3-1 -	1
C63C51607-1	3-8 -	1
C63C51610-1	3-8 - 16	2
C63D51598-1	3-1 - 8	1
C63D51605-1	3-8 -	1
C63D51606-1	3-8 - 1	1
C63F51596-1	3-1 -	1
C63F51597-1	3-1 - 1	1
C63F51604-1	3-8 -	1
C63F51613-1	3-7 - 16	1
C63F51616-1	3-2 - 1	1
C64F46819-2	3-9 -	1
C65D00217-1	3-7 - 31	2
C66A00218	2-11-1 -	1
C66A00219-1	2-11-1 - 15	1
C66A00235-1	2-11-1 - 18	1
C66A00236-1	2-11-1 - 19	1
C66B00237-1	2-11-1 - 17	1
C66B00238-1	2-11-1 -	1
C66B50193-1	2-6-11 - 14	16
C66C00232-1	2-11-1 - 16	1
C66C50192-1	2-6-11 - 15	16
C66C50195-1	2-6-11 - 4	2
C66C50199-1	2-6-11 - 13	2
C66D00743	3-7 -	1
C66D00743-11	3-7 - 36	1
C66D00743-12	3-7 - 33	1
C66D00743-13	3-7 - 32	1
C67B00215	3-7 - 37	1
C67B00216	3-7 - 38	1
C67B00217	3-7 -	1
C69B47379-1	2-3-16 - 7	2
C70A47179-1	2-7-4 -	4
C71B00267-1	2-14-1 - 50	1
C71B47355-1	2-14-1 - 46	1
C71C00268-1	2-14-1 -	1
C71C00269-1	2-14-1 -	1
C71C47114-1	2-14-1 - 45	1
C720-072-2000	3-9 - 7	1
	3-9 -	1

PART NUMBER	FIG AND INDEX NO	QTY /AC
C72B47274-1	2-9-5 - 57	1
C72B47274-2	2-9-5 -	1
C72C47117-1	2-14-1 -	1
C72D47118-1	2-14-2 -	1
C72D47119-1	2-13-4 -	REF
	2-14-1 - 1	REF
	2-14-2 -	1
C74C00179	2-3-4 - 42	2
C74C47075-1	2-13-2 - 6	1
C75502	2-7-6 - 39	1
C75506	2-12-1 - 29	REF
	2-12-18 - 3	1
C75507	2-1-6 - 38	REF
	2-12-1 - 39	REF
	2-12-23 - 10	1
C75509	2-7-13 - 46	REF
	2-12-1 - 41	REF
	2-12-23 - 12	1
	2-14-4 - 34	REF
C90004-10	2-14-2 - 5	2
C90015CX10	2-14-2 - 4	2
C9614-1	2-12-25 - 2	1
CA3193JJJ0376	2-6-5 - 55	REF
	2-6-6 - 20	1
CAE9513001-1	2-14-2	1
CAE9513002-1	2-14-2 - 80	1
CAE9513003-1	2-14-2 - 81	1
CAE9522087-1	2-12-18 - 2	1
CAE9522088-1	2-12-25 - 3	1
CAE9522094-1	2-12-3 - 1	4
CAE9528402	2-6-13 -	NP
CAE9528403-1	2-6-13 - 19	1
CAE9528404-1	2-6-13 - 8	1
CAE9528405-1	2-6-13 - 15	1
CAE9528406-1	2-6-13 - 17	1
CAE9713001-1	2-12-7 -	2
CAE9713002-1	2-12-7 -	1
CAE9713003-1	2-12-7 -107	1
CAE9725100-1	2-14-7 -	RF
	2-14-7 -	NP-
CAE9725300-3	2-14-7 -	1
CAE9725600-1	2-14-7 - 15	NP
CAE9725602-1	2-14-7 - 7	NP
CAE9725603-1	2-14-7 -	AR
CAE9725603-3	2-14-7 -	AR
CAE9725800-1	2-14-7 - 3	NP
CAE9725801-1	2-14-7 - 1	NP
CAE9725802-1	2-14-7 -	NP
CAE9725804-1	2-14-7 -	NP
CAE9725805-1	2-14-7 - 6	NP
CAE9725806-1	2-14-5 - 21	1
	2-14-7 - 11	NP-
CCFM200-3	2-2-2 -	12
CCFM200-4	2-2-2 -	14
CE9226-4	2-12-22 - 86	2
CF-T-75	2-3-3 -	4
CFT75-36-009	2-12-7 -	2
CK05BX102K	2-13-2 - 50	5
CK05BX104K	2-13-2 -115	8
CK06BX105K	2-13-2 -131	2
	2-13-2 -159	2
CM8-627	2-12-11 -	2
	2-12-14 -	1
COMM	2-3-9 -	1
CP53B1EF205K1	2-12-9 - 18	2
CR3213-4	2-3-4 -	3
	2-3-18 -	3
CRS13E107K-L	2-13-2 - 98	2
CRS13F565K-L	2-13-2 -110	9
CRS13G226K-L	2-13-2 -107	1
CV5116/ARN508	2-13-2 - 14	1
D1068-064-1	2-16-2 -	42
D110278	2-13-3 -	2
D20418-14	2-12-3 - 50	6

PART NUMBER	FIG AND INDEX NO	QTY /AC
D20418-2	2-13-4 -	2
	2-13-4 -	2
D53018	2-13-2 - 37	4
	2-13-4 - 42	4
DA-51220-1	2-13-3 -	1
DAA628-40	2-3-19 - 14	2
DAA629-46	2-3-19 - 10	2
DAU-15P	2-13-2 - 38	1
	2-13-2 - 48	1
DB51221-1	2-13-6 - 58	1
DC-51222-1	2-13-3 -	2
DCU-37P	2-13-2 - 36	1
	2-13-2 - 40	1
	2-13-2 - 46	1
	2-13-2 -160	1
	2-13-3 - 78	1
DK100	2-13-1 - 2	1
DND1695-7-91	2-12-14 -	1
DPAME-32-33S	2-13-3 - 18	2
DPJM59C10-34A	2-13-3 - 11	1
DPX2ME-A40W	2-13-3B - 3	2
1SA40W1S-33		
DT2RA7	2-3-13 - 37	1
	2-16-3 - 9	2
DTD 2684-1	2-12-25 - 1	8
E8058	2-7-18 -	1
E9163M2	2-3-11 -	1
EA323-2H	2-14-2 - 22	1
EA956	2-12-25 -	AR
ER776-4	2-8-12 - 9	2
ER804-08-06-06	2-8-10 - 11	1
ER804-080606	2-8-9 - 57	1
ER833D0806	2-8-10 - 88	2
ER837-0608	2-8-9 - 50	1
F22A27M-22-40	2-13-2 - 43	2
F34-14	2-3-4 - 5	2
	2-4-4 - 10	1
	2-4-4 - 24	1
F5040-16	2-9-1 - 12	REF
F61A1718-9	2-6-6 - 18	1
	2-6-6 - 47	1
F893731	2-3-11 - 7	1
	2-3-16 - 46	REF
FB-40-E4	2-14-4 - 25	1
FCA25751	2-6-4 - 3	4
FCB20104	2-3-5 - 33	25
	2-3-5 -	6
	2-3-6 - 19	4
	2-3-6 -	4
	2-3-6 -	8
	2-3-6 -	12
	2-3-6 -	12
	2-3-7 - 27	10
	2-3-7 -	4
FCB20441	2-3-5 - 32	25
	2-3-5 - 38	6
	2-3-6 - 18	4
	2-3-6 - 30	4
	2-3-6 - 35	8
	2-3-6 - 60	12
	2-3-6 - 68	12
	2-3-7 - 26	10
	2-3-7 - 34	4
FCB20459	2-3-5 - 34	25
	2-3-5 -	6
	2-3-6 - 20	4
	2-3-6 -	4
	2-3-6 -	8
	2-3-6 -	12
	2-3-6 -	12
	2-3-7 - 28	10
	2-3-7 -	4
FCB25714	2-6-2 - 8	1
	2-6-3 - 8	2

PART NUMBER	FIG AND INDEX NO	QTY /AC
FCB25715	2-6-2 - 12	4
	2-6-3 - 4	16
	2-6-4 - 4	8
FCB25716	2-6-2 - 11	2
	2-6-3 - 7	4
	2-6-4 - 5	2
FCB25717	2-6-2 - 10	1
	2-6-3 - 5	2
FCB25722	2-6-3 - 3	4
FCB25752	2-6-4 - 2	4
FCB25753	2-6-2 - 7	2
	2-6-3 - 2	4
FCC20458	2-3-5 -	25
	2-3-5 -	6
	2-3-6 -	4
	2-3-6 -	4
	2-3-6 -	8
	2-3-6 -	12
	2-3-6 -	12
	2-3-7 -	10
	2-3-7 -	4
	2-6-2 - 59	REF
	2-6-3 - 66	REF
	2-6-4 - 46	REF
FCC60313	2-6-2 - 9	4
FCC65217	2-6-3 - 6	2
FCD60815	2-6-1 - 1	REF
	2-6-2 - 6	1
FCD60816	2-6-1 - 8	REF
	2-6-3 - 1	1
FCD60817	2-6-3 -	1
FCD60818	2-6-1 - 15	REF
	2-6-4 - 1	1
FCD60819	2-6-4 -	1
FF164426-2	2-2-2 -	12
FF600-5	2-4-4 - 6	2
	2-4-4 - 8	2
FFW92	2-14-1 -	4
FG220A217	2-14-4 - 7	1
FG250A45	2-14-4 - 9	1
FL203-1	2-6-1 - 3	REF
FLLA	2-12-6 - 3	2
FLLE	2-12-6 - 2	2
FN1014-1032	2-12-6 -	4
FN55D7501F	2-13-2 -100	1
FSH	2-12-6 -	
	2-12-6	22
FX90	2-9-5 -	1
G-88	2-5-6 - 15	AR
G51H-C	2-12-23 - 5	2
G56679	2-7-1 - 4	REF
	2-7-6 - 31	2
G56679SB	2-7-1 -	REF
	2-7-6 -	2
G8400A8-24	2-12-1 - 24	REF
	2-12-8 - 71	REF
	2-12-18 - 1	2
GB300NA111	2-12-3 - 18	1
GTS-10-00-1-25	2-13-3 -	3
H14-3	2-3-7 -	2
H5000-081-125	2-3-2 - 28	1
H5000-2-040-081	2-3-20 - 42	2
H5000-2-051-081	2-3-18 - 13	2
	2-3-18 - 34	2
H5000-2-064-064	2-3-9 - 45	2
H5000-2-072-072	2-3-18 - 6	2
H5000-2-072-102	2-3-8 - 1	1
	2-3-8 - 29	1
H5000-2-072-132	2-3-8 -	1
H5000-2-081-164	2-3-10 - 11	2
H5000-2-091-091	2-3-9 - 40	1
H5000-2-156-125	2-3-9 - 60	1
HAA-522A	2-6-13 - 22	1
HKP	2-12-15 - 16	8

PART NUMBER	FIG AND INDEX NO	QTY /AC
HL2180-6-23	2-3-7 -	2
HMR4M	2-4-5 -13	2
HP457100-1900	2-8-10 - 9	1
HR2002-1	2-8-8 -16	1
HRBLL3E	2-7-18 -21	2
HRBML3EFN	2-7-9 -34	2
HRBML3FN	2-7-18 -15	1
HS109-012	2-8-8 -20	1
HS109-015	2-8-8 -21	1
HS109-016	2-8-8 -17	2
HSBG3	2-7-9 -	4
HT1-10	2-13-2 -	4
	2-13-2 -	4
ID-1961B/ARC-	2-13-4 -78	1
164(V)		
	2-14-2 -79	REF
ID5040C/ARN	2-13-4 - 2	2
ID5040D/ARN	2-13-4 -	
INST8-7	2-13-2 -77	REF
	2-14-3 - 3	1
JAN-1N3613	2-12-14 -	1
JAN-P-127	2-6-2 -	AR
	2-6-3 -	AR
JG602A1	2-14-2 -23	1
JS5	2-7-18 -12	1
K-D4B-035	2-13-2 -47	1
K41A-10006-12	2-4-11 -15	2
K41A-30019-1	2-3-5 -	NP
K41A-30019-38	2-3-5 -43	2
	2-3-5 -	2
K41A-30019-40	2-3-5 -47	1
K41A-30019-41	2-3-5 -	1
K41A-30019-42	2-3-5 -48	2
K41A-30019 C C	2-3-5 -	NP
K41A-35008-16	2-3-8 -45	1
K41A-35008-17	2-3-8 -	1
K41A-35008-18	2-3-8 -43	1
K41A-35008-20	2-3-8 -44	1
K41A-35008-21	2-3-8 -	1
K41A-35008-40	2-3-8 -46	2
K41A-35008-50	2-9-4 - 8	1
K41A-35008-51	2-9-4 -	1
K41A-35008-802	2-3-8 -	NP
K41A-40550-10	2-9-7 -40	1
K41A-40550-2	2-9-7 -39	1
K41A-58029	2-12-14 -	NP
K41A-58038-116	2-12-3 -	2
K41A-58040-4	2-12-3 -26	4
K41A-58042-10	2-13-2 -	1
K41A-58042-12	2-13-2 -	2
K41A-58043-20	2-13-2 -	REF
K41A-58043-26	2-14-5 -11	1
K41A-58043-8	2-13-2 -	2
K41A-58045-20	2-12-3 -31	1
K41A-58045-32	2-13-2 -	1
K41A-58045-34	2-13-2 -	2
K41A-58045-8	2-13-2 -18	2
K41A-59005-6	2-12-6 -48	1
K41A-59023-54	2-12-11 -	1
K41A-60016	2-6-9 -	NP
K41A-60018	2-6-2 -	REF
	2-6-3 -	REF
	2-6-7 -	NP
	2-6-8 -	REF
	2-6-9 -	REF
	2-9-6 -	REF
K41A-60018-110	2-6-9 -	NP
K41A-60018-112	2-6-9 -	NP
K41A-60018-118	2-6-9 - 3	2
K41A-60018-122	2-6-9 -11	2
K41A-60018-125	2-6-7 - 3	1
K41A-60018-127	2-6-3 -67	1
K41A-60018-16	2-6-8 -	1
	2-9-6 -40	1

PART NUMBER	FIG AND INDEX NO	QTY /AC
	2-9-7 - 49	REF
K41A-60018-18	2-6-7 -	1
K41A-60018-2	2-6-7 - 46	REF
	2-6-8 -	1
K41A-60018-4	2-6-8 - 1	1
K41A-92000-14	2-3-8 -	1
K41A-92000-16	2-3-8 -	1
K41A-92000-6	2-3-8 - 31	1
K41A-92000-8	2-3-8 - 30	1
K41A-95000	2-9-5 -	NP
KC106-500	2-7-11 - 33	1
KD-59-67	2-13-3 - 79	1
KE4-10	2-5-2 - 13	2
	2-5-2 - 21	1
KEL4-10	2-5-2 - 17	2
	2-5-2 - 22	1
KJ126	2-7-11 -	1
KP16BS	2-7-9 - 15	2
KP23BS	2-3-12 - 2	3
	2-3-12 - 5	2
KSB8SXD1	2-2-3 - 2	2
KV144	2-7-11 - 32	1
KWB4N	2-7-13 - 28	4
KWB4N3	2-7-13 -	
KY246	2-7-11 - 28	1
KY925	2-7-1 - 16	REF
	2-7-11 -	1
	2-7-12 - 12	1
KZ147	2-7-11 - 34	1
L22BA07	2-14-3 - 3	2
L22BA20	2-14-3 - 3	2
L622	3-1 -	2
LAC24-426	2-8-4 -	AR
LC136	2-16-3 - 28	AR
LDH482	3-7 - 17	1
LDH682	3-7 - 19	1
LHA4	2-3-12 - 15	1
	2-3-13 - 13	1
	2-3-13 - 23	1
LHA5	2-3-13 - 4	1
	2-3-13 - 14	1
LHA8	2-1-3 - 40	2
LHEB220-164	2-1-2 -	2
LHSSR-10	2-4-8 - 4	4
LHSSR-8	2-4-3 - 27	2
LHSSR18A	2-4-1 - 10	REF
	2-4-2 - 4	2
LM113H	2-13-2 -126	1
LM124J	2-13-2 -124	2
ls1010-180	2-14-2 - 83	1
LS5281	2-14-7 -	AR
LS607-24	2-6-12 - 6	6
LS607-32	2-6-12 -	2
LS607-8	2-13-6 - 19	1
LSS-4	2-3-5 -	2
M-COAT J	2-12-25 -	AR
M12833/45-01	2-12-12 -	2
M12883/40-13	2-12-6 -	1
	2-12-23 -	1
M12883/40-18	2-12-6 -	1
M12883/41-11	2-12-11 -	3
	2-12-12 -	2
	2-12-17 - 61	2
	2-12-23 -	3
	2-12-23 -	1
	2-12-25 -	1
M12883/41-12	2-12-6 -	2
M12883/44-01	2-12-6 -	6
	2-12-11 -	2
	2-12-13 - 35	1
M12883/45-01	2-12-6 -	1
	2-12-11 -	1
	2-12-17 - 60	2
	2-12-23 -	1

PART NUMBER	FIG AND INDEX NO	QTY /AC
M22759/34-01-5D	2-12-7 -	AR
	2-12-7 -	AR
M23053/5-104-9	2-3-4 -	AR
	2-3-18 -	AR
	2-4-6 -	AR
	2-12-18 -	1
M24308/2-1	2-12-7 -116	3
M24308/4-4	2-12-17 - 45	REF
	2-13-4 - 47	1
	2-13-4 - 72	1
	2-13-5 - 13	1
M24308/4-5	2-12-17 - 46	REF
	2-13-4 - 46	1
	2-13-4 - 74	1
	2-13-5 - 14	1
M25708/1-01	2-13-2 - 11	1
	2-13-2 - 16	1
M28748/3-C0AS1A	2-12-24 - 20	1
M28748/4-C1AF1A	2-12-24 - 4	1
M28748/4-D0RS1A	2-13-5 - 7	1
M34-14	2-4-4 - 11	1
M3472L14-12S	2-12-3 - 84	1
M39012/01-0005	2-13-6 - 59	2
M39012/01-0501	2-13-3 - 27	1
	2-13-3 -119	1
	2-13-3 -120	1
M39012/01-0504	2-13-3 - 1	1
M39012/02-0503	2-13-3 - 25	1
M39012/02-0513	2-13-2 - 53	1
M39012/05-0501	2-13-3 - 14	1
	2-13-3 - 28	1
M39012/16-0502	2-13-2 - 83	REF
	2-13-3 - 5	1
	2-13-3 - 12	2
M39012/16-0503	2-13-2 - 54	1
	2-13-2 - 57	1
	2-13-2 - 60	1
M39012/17-0502	2-13-2 - 84	REF
	2-13-3 - 6	1
M39012/20-0503	2-13-2 - 56	1
	2-13-2 - 59	1
M39016/15-081P	2-13-2 - 99	4
M39029/92-533	2-12-11 -	8
	2-12-12 -	8
	2-12-17 -	8
	2-12-23 -	8
	2-12-25 -	8
M520-U5N-L	2-12-6 - 79	1
	2-12-9 - 29	2
	2-12-23 - 56	1
	2-12-23 - 65	1
M55339/03-00027	2-13-6 - 59	2
M55339/14-00306	2-13-3 - 12A	2
M6106/28-024X	2-12-11 - 32	2
M6106/51-005	2-12-6 - 76	1
M641/6-1	2-12-17 - 37	1
M81714/60-16-01	2-12-6 - 85	1
	2-12-9 -	1
	2-12-13 - 26	1
	2-12-23 - 50	1
M81714/60-16-02	2-12-6 -	2
	2-12-9 -	1
	2-12-23 - 31	1
	2-12-23 - 51	1
M81714/60-16-03	2-12-18 - 18	1
	2-12-23 -	1
M81714/60-20-01	2-12-6 -	1
	2-12-9 - 45	3
	2-12-13 - 27	2
	2-14-2 - 65	4
M81714/60-20-02	2-12-3 - 33	1

PART NUMBER	FIG AND INDEX NO	QTY /AC
	2-12-9 -	2
	2-14-2 -	2
M81714/60-20-03	2-12-3 -	2
	2-12-6 -	1
	2-12-9 -	5
	2-12-9 - 56	1
	2-12-11 - 38	2
	2-12-12 - 39	1
	2-12-13 -	3
	2-12-23 - 33	1
	2-12-28 - 4	1
	2-14-2 -	3
M81714/60-20-04	2-12-3 - 23	1
	2-12-3 -	4
	2-12-6 -	1
	2-12-9 -	4
	2-12-9 -	1
	2-12-9 - 57	2
	2-12-11 -	3
	2-12-12 -	1
	2-12-13 -	3
	2-12-18 - 19	1
	2-12-23 - 32	1
	2-12-23 - 58	1
	2-12-25 - 9	1
	2-12-29 - 4	3
M81714/60-20-06	2-12-9 - 52	1
	2-12-11 -	1
	2-12-12 -	1
	2-12-13 -	2
	2-12-23 - 38	1
	2-12-23 - 46	1
	2-12-23 - 49	1
	2-12-23 - 59	1
	2-12-25 -	1
M81714/60-20-2	2-12-23 - 43	1
M81714/60-22-01	2-12-6 -107	1
	2-12-6 -109	1
M81714/60-22-04	2-12-3 -	1
	2-12-9 -	1
M81714/60-22-05	2-12-3 -	2
	2-12-9 -	3
	2-12-11 -	1
M81714/60-25-05	2-12-6 -110	1
M81714/63-16S	2-12-6 - 83	1
M81714/63-20S	2-12-3 - 24	1
	2-12-3 - 35	3
	2-12-6 - 84	3
	2-12-11 - 37	1
	2-12-13 - 37	5
	2-12-17 - 78	6
	2-13-6 - 67	1
	2-14-6 - 8	1
M81714/65-20-1	2-12-9 - 25	1
M81714/65-20-2	2-12-9 -	1
M83413/8-A04AA	2-1-7 - 21	2
M83413/8-A04AC	2-1-7 - 22	2
M83413/8-A04BB	2-9-4 - 33	2
	2-12-3 - 38	2
M83413/8-A04BC	2-1-8 - 72	2
	2-2-3 - 45	2
	2-6-3 - 57	1
M83413/8-A04BD	2-2-3 - 46	2
M83413/8-A05AA	2-1-7 - 23	2
M83413/8-A05BB	2-6-2 - 51	5
	2-7-15 - 50	1
	2-9-4 - 40	4
M83413/8-A05BC	2-1-8 - 75	2
M83413/8-A06AB	2-12-18 - 29	1
M83413/8-A06AC	2-4-10 - 18	2
M83413/8-A06BB	2-3-4 - 59	4
	2-3-21 - 16	2
	2-4-6 - 22	2
	2-6-4 - 41	4

PART NUMBER	FIG AND INDEX NO	QTY /AC
	2-9-4 -34	2
	2-9-4 -41	1
	2-12-3 -40	1
	2-14-2 -73	1
M83413/8-A07BC	2-2-1 -21	1
M83413/8-A08AA	2-6-7 -47	2
M83413/8-A08BB	2-1-8 -78	10
	2-9-4 -39	1
	2-12-3 -42	1
M83413/8-A08BE	2-3-5 -50	2
M83413/8-A08CC	2-7-17 -43	2
M83413/8-A10BB	2-12-3 -43	1
M83413/8-A12BB	2-3-4 -62	1
M83413/8-H06DE	2-12-3 -36	1
	2-12-25 -17	1
M83461/2-904	2-8-4 -	1
	2-8-4 -	1
	2-8-4 -	1
	2-8-4 -	1
	2-8-12 -	2
	2-8-12 -	2
	2-8-12 -	4
	2-8-12 -	2
	2-8-12 -	4
M83536/10-024M	2-12-1 -42	REF
	2-12-11 -33	3
	2-12-12 -31	2
	2-12-23 -29	3
	2-12-23 -40	1
	2-12-25 -14	1
M83536/2-024	2-12-6 -75	1
	2-12-11 -34	1
	2-12-12 -33	2
	2-12-23 -28	1
M83536/6-022M	2-12-6 -72	6
	2-12-13 -35	1
M83723/66R1407N	2-13-5 -16	6
	2-16-3 -	2
M83723/75R1212N	2-13-3 -13	1
M83723/82R1407N	2-13-5 -12	2
M83723/86R1624N	2-12-17 -49	1
M85049/15-S-18N	2-12-17 -	1
M85049/31-14N	2-12-14 -	1
	2-12-14 -	1
	2-12-17 -	3
M85049/31-18N	2-12-14 -	2
	2-12-17 -	3
M85049/31-20N	2-12-17 -	6
M85049/31-22N	2-13-5 -	1
M85049/31-24N	2-12-6 -	2
M85049/31-S-10N	2-12-27 -	1
M85049/31-S-24N	2-13-3 -	1
M85049/48-3-3	2-13-5 -	1
M85049/48-3-3N	2-13-6 -58	1
M85049/48-3-4	2-13-5 -	1
M85049/49-2-18N	2-13-3 -	1
M85049/51-20N	2-12-17 -	1
M85049/51-22N	2-12-17 -	1
M85049/51-24N	2-13-3 -	2
M85049/51-S-20N	2-12-17 -	1
M85049/51-S-22N	2-12-17 -	2
M85049/51-S-24N	2-13-3 -	1
M85049/52-12N	2-13-6 -56	1
M85049/52-16N	2-13-6 -54	2
M85049/52-22N	2-13-6 -55	1
M85049/52-S-10N	2-12-7 -	28
M85049/52-S-12N	2-12-7 -	19
M85049/52-S-14N	2-12-7 -	24
M85049/52-S-16N	2-12-7 -	7
M85049/52-S-18N	2-12-8 -	5

PART NUMBER	FIG AND INDEX NO	QTY /AC
M85049/52-S-20N	2-12-7 -	26
M85049/52-S-22N	2-12-7 -	12
M85049/52-S-24N	2-12-7 -	5
	2-12-22 -	3
M85049/52-S-28N	2-12-17 -	2
M85049/52-S-8N	2-12-17 -	2
M85049/52S-24N	2-12-17 -	1
M85049/52S14N	2-16-3 -	2
M85049/52S24N	2-12-7 -	2
M8723/75R2255N	2-13-5 - 15	1
M9177/3-1	2-12-28 - 1	2
	2-13-5 - 17	2
	2-16-3 -	2
M9700	2-3-20 - 86	1
MCD7711	2-3-13 - 36	1
MDL-1	2-12-15 - 26	8
MF-6301-04	2-13-2 - 31	2
	2-13-4 - 48	2
MIL-39016/15-81P	2-13-4 - 65	5
MIL-C-5040	2-6-2 - 48	AR
	2-6-2 - 49	AR
	2-6-2 - 50	AR
MIL-S-6758	2-14-7 -	1
MIL-S-9320	2-12-12 - 22	1
MIL-T-5041	2-4-7 - 47	2
MIL-T-5583A	2-7-1 - 25	REF
	2-7-13 - 45	REF
	2-12-23 - 23	REF
	2-14-4 - 11	1
MIL-W-83420	2-5-3 - 18	AR
MJE182	2-13-2 -134	1
MJE340	2-13-2 -112	1
MN97HA4WL	2-13-4 - 1	2
MS119E12-8	2-12-3 - 73	1
MS119E24-61X	2-12-3 - 74	1
MS122118	2-14-2 - 13	2
MS122198	2-14-2 -	2
MS14104-4	2-3-3 - 7	4
MS15001-1	2-4-3 - 31	4
MS15795-804	2-12-18 -	2
MS16624-1037	2-3-15 - 10	6
MS16624-1087	2-3-15 - 8	2
MS16624-68	2-16-4 - 64	32
MS16625-1143	2-1-3 -	2
MS16625-1300	2-7-6 - 5	2
MS16625-212	2-7-5 - 40	1
MS171467	2-4-7 - 19	6
MS171526	2-8-16 - 1	1
MS171606	2-3-15 - 16	1
MS17245-5	2-12-11 - 18	2
MS17821-1-9	2-14-4 - 8	4
MS17821-2-9	2-6-3 - 30	2
MS18029-1L-6	2-12-6 - 28	1
MS18029-1S-6	2-12-23 -	2
MS18235-3RT	2-14-1 -	1
MS20001P3-7200	2-3-2 - 29	1
MS20002-10	2-4-2 -	2
MS20002-4	2-6-10 -	2
MS20002-5	2-4-9 -	8
MS20002C-5	2-6-10 -	4
MS20002C10	2-4-2 -	2
MS20002C4	2-3-7 -	6
MS20002C8	2-1-2 -	10
MS20004-10	2-3-7 - 38	4
MS20005-18	2-6-10 - 29	4
MS20005-24	2-6-10 -	2
MS20005-26	2-6-10 -	2
MS20005-54	2-6-10 - 5	2
MS20005H7	2-4-2 - 5	8
MS20006-12	2-3-14 - 8	1
MS20008-18	2-1-2 - 9	2
MS20073-03-10	2-7-6 - 25	2
MS20073-04-03	2-6-2 - 45	76
MS20073-04-04	2-6-2 - 14	80

PART NUMBER	FIG AND INDEX NO	QTY /AC
	2-6-3 - 63	REF
	2-6-4 - 7	30
MS20073-04-05	2-6-2 - 16	120
MS20073-04-17	2-6-3 - 50	12
MS20201KP5A	2-7-4 - 5	4
MS20206DSP5	2-1-4 - 43	2
MS20207DPP4	2-7-13 - 25	1
MS20219-2	2-3-17 - 8	1
MS20219A1	2-7-4 - 33	2
MS20230A10	2-3-9 - 53	4
MS20230B2	2-17-1 -	2
MS20230B4	3-7 - 34	1
MS20253P2-150L	2-14-2 - 82	1
MS20253P2-155	2-3-20 - 75	4
MS20253P2-225	2-3-20 - 44	1
MS20253P2-300	2-3-9 - 46	1
MS20253P2-500	2-3-20 - 58	1
MS20364-624	2-16-4 -	8
MS20392-1C11	2-12-5 - 3	4
MS20392-1C19	2-7-17 - 38	4
MS20392-2C11	2-7-4 - 54	1
MS20392-2C13	2-7-4 - 55	1
MS20392-2C17	2-4-1 - 27	REF
	2-4-2 - 32	2
	2-4-7 - 50	REF
	2-4-11 - 41	REF
MS20392-2C19	2-3-14 - 13	4
MS20392-2C21	2-3-8 - 20	2
MS20392-2C25	2-3-4 - 28	6
MS20392-2C37	2-4-11 - 21	2
MS20392-2C55	2-7-11 - 27	1
MS20392-2C7	2-3-17 - 26	8
MS20392-2C9	2-7-4 -	3
MS20392-2C93	2-3-9 - 42	1
MS20392-3C11	2-7-5 - 27	2
MS20392-3C21	2-3-8 - 14	4
MS20392-3C25	2-3-3 - 2	4
MS20392-3C29	2-3-4 - 7	2
MS20392-3C41	2-4-9 - 15	3
MS20392-3C45	2-7-5 - 29	1
MS20392-3C47	2-4-8 - 19	4
MS20392-5C39	2-16-4 - 37	4
MS20392-7C39	3-3 - 40	14
MS20401AD5	2-2-2 -	20
MS20426AB4	2-2-2 -	44
MS20426AB5	2-2-2 -	14
MS20426AD3-3	2-12-20 - 99	16
MS20426AD3-4	2-14-1 -	2
MS20426AD3-4A	2-12-3 -	38
MS20426AD3-7	2-14-7 -	10
MS20426AD5-5A	2-12-3 -	8
MS20426AD5-6A	2-12-3 -	6
MS20426DD6-9	2-1-3 -	20
MS20470A4-4	2-14-7 - 5	4
MS20470AD3-4	2-13-2 -155	4
MS20470AD5-8A	2-12-3 -	4
MS20470AD6-10	2-13-1 -	4
MS20500-1032	2-4-7 -	59
MS20500-428	2-5-3 -	46
MS20500-524	2-4-7 -	12
MS20604ML4W3	2-8-4 - 73	1
MS20659-107	2-5-3 -	1
MS20819-16	2-4-4 -	2
MS20819-20	2-6-4 -	1
MS20819-3J	2-11-1	2
	2-11-1	2
	2-11-1	2
MS20819-4	2-5-4 -	6
MS20819-6	2-5-4 -	3
MS20819-8	2-5-5 - 8	2
MS20819-8J	2-6-12 - 12	1
MS20826-4D	2-15-1 - 39	6
MS20995F41	2-7-4 -	AR
MS21042-04	2-12-3 - 53	108

PART NUMBER	FIG AND INDEX NO	QTY /AC
MS21042-06	2-12-6 -	80
	2-14-5 -	2
MS21042-08	2-12-7 -	258
MS21042-3	2-6-12 -	17
	2-8-16 -	3
	2-12-7 -	21
	2-12-13 -	1
	2-12-17 -	38
MS21042-4	2-12-17 -	4
MS21042-6	2-12-7 -	42
MS21042-L04	2-12-3 -	6
	2-12-9 -	16
	2-13-4 -	4
MS21042-L10	2-6-13 -	2
MS21042-L3	2-12-27 -	8
MS21042L04	2-7-18 -	2
	2-12-6 -	6
	2-12-14 -	26
MS21042L06	2-1-7 -	74
	3-9 -	2
MS21042L08	2-1-3 -	106
	2-3-15 -	AR
	2-3-20 -	
	2-13-5	1
MS21042L3	2-1-3 -	1131
	2-12-25 -	AR
	2-12-25 -	4
	2-13-2 -	23
	2-13-6 -	REF
	2-14-1 -	135
MS21042L4	2-1-3 -	258
MS21042L5	2-3-2 -	48
MS21042L6	2-1-3 -	16
MS21042L8	2-1-4 -	84
MS21043-08	2-3-9 -	5
MS21043-3	2-3-8 -	273
MS21043-4	2-3-20 -	10
MS21043L3	2-6-2 -	6
MS21044-4	2-14-5 -	4
MS21044D08	2-1-4 -	18
MS21044D3	2-3-16 -	2
MS21044N04	2-12-18 -	2
MS21044N3	2-12-27 -	33
MS21045-8	2-1-2 -	2
MS21048-08	2-12-20 -	3
MS21051L08	2-12-27 -	1
MS21055L08	2-12-27 -	8
MS21059-3	2-14-7 -	5
MS21060L4	2-3-6 -	2
MS21069L08	2-12-27 -	2
MS21075-3	2-14-5 -	2
MS21075-4	2-12-20 -98	8
MS21075L3	2-12-3 -	19
MS21076-08	2-12-13 -20	2
MS21076L3N	2-12-3 -	4
MS21081-4	2-14-7 -	1
MS21083N08	2-7-4 -	10
MS21083N3	2-7-2 -	59
MS21083N4	2-7-4 -	25
MS21104D5	2-3-16 -37	1
MS21104D8	2-3-16 -44	1
MS21104DW4	2-3-16 -	1
MS21151-7C	2-7-18 -20	2
MS21152-1	2-4-4 -16	1
	2-7-9 - 8	2
MS21209F1-20	2-1-8 -	4
	2-5-3 -12	8
MS21209F4-15	2-1-8 -	2
	2-6-2 -	28
MS21209F4-20	2-1-8 -	36
MS21209F415	2-1-4 -	8
MS21209F5-15	2-1-3 -50	18
MS21209F6-15	2-7-2 -10	1
MS21209F8-15	2-1-3 -20	4

PART NUMBER	FIG AND INDEX NO	QTY /AC
MS21209F8-20	2-3-6 - 66	2
MS21245-08	2-3-8 -	4
MS21250-08018	2-6-10 - 49	2
MS21266-1N	2-8-16 - 2	AR
MS21266-2	2-12-7 - 58	AR
	2-12-17 -118	AR
	2-12-17 -142	AR
	2-12-17 -150	AR
	2-12-20 - 28	AR
	2-12-20 - 55	AR
	2-12-22 - 43	AR
	2-13-2 - 66	AR
	2-13-6 - 49	AR
MS21266-3N	2-15-2 -	AR
MS21900D4	2-15-2 - 14	2
MS21902-4	2-4-3 - 15	10
MS21902-8	2-8-9 - 58	1
MS21902D4	2-4-3 - 4	18
MS21902D6	2-8-4 - 26	10
MS21902D8	2-8-10 - 10	1
MS21904D6	2-6-3 - 68	1
MS21905-6	2-8-14 - 15	2
MS21905-8	2-8-10 - 6	1
MS21905D4	2-8-6 - 47	4
MS21905D6	2-8-10 - 45	2
MS21906D4	2-8-6 - 42	1
MS21906D6	2-8-10 - 26	1
MS21907-4	2-4-7 - 9	6
MS21907-6	2-8-10 - 49	2
MS21907D4	2-8-6 - 5	8
MS21907D6	2-8-10 - 38	1
MS21908-4	2-8-3 - 24	18
MS21908-6	2-8-10 - 47	12
MS21908D4	2-8-3 - 14	28
MS21908D6	2-8-9 - 49	6
MS21909-4	2-4-3 - 7	5
MS21909D4	2-8-4 - 16	1
MS21909D6	2-8-4 - 6	4
MS21910D8	2-8-9 - 56	1
MS21911-4	2-8-8 - 26	1
MS21912-4	2-8-4 - 4	5
MS21912D6	2-8-9 - 16	8
	2-8-11 - 67	REF
MS21914-4	2-3-16 - 43	3
MS21915-8-6	2-8-14 - 30	1
MS21916-6-4	2-4-3 - 10	1
MS21916-8-6	2-8-10 - 42	1
MS21916D6-4	2-8-4 - 25	21
	2-8-15 - 28	1
MS21916D8-6	2-8-4 - 34	1
	2-8-8 - 10	1
	2-8-9 - 68	1
	2-8-15 - 26	1
MS21919DWG-2	2-14-7 - 19	1
MS21919WCH11	2-12-22 - 44	3
MS21919WCH12	2-12-22 - 47	2
MS21919WCH13	2-13-2 - 81	1
MS21919WCH2	2-12-22 - 29	2
MS21919WCH3	2-12-22 - 31	25
MS21919WCH4	2-12-22 - 51	4
MS21919WCH5	2-12-22 - 32	27
MS21919WCH6	2-12-22 - 35	9
MS21919WCH7	2-12-22 - 40	5
MS21919WCH8	2-12-28 - 14	1
MS21919WCH9	2-12-22 - 58	2
MS21919WCJ32	2-9-4 - 30	3
MS21919WCJ6	2-8-10 -	2
MS21919WDG-8	2-6-12 - 5	9
MS21919WDG10	2-8-15 - 15	4
	2-12-7 -101	1
	2-12-17 - 86	30
MS21919WDG11	2-3-16 - 25	44
MS21919WDG12	2-6-7 -	23
MS21919WDG13	2-12-17 -116	8

PART NUMBER	FIG AND INDEX NO	QTY /AC
	2-14-5 -	2
MS21919WDG14	2-12-7 - 88	1
MS21919WDG15	2-12-7 - 62	3
MS21919WDG16	2-6-7 - 18	4
MS21919WDG18	2-12-17 -138	4
MS21919WDG2	2-5-4 - 30	6
	2-12-16 -	1
	2-12-17 -129	22
MS21919WDG20	2-11-1 -	1
MS21919WDG24	2-12-17 -105	3
MS21919WDG26	2-9-5 - 53	5
MS21919WDG28	2-9-5 - 20	3
MS21919WDG3	2-11-1 - 5	12
	2-12-8 - 37	4
	2-12-8 - 49	45
MS21919WDG31	2-3-16 - 39	1
MS21919WDG4	2-4-2 - 18	21
	2-8-15 - 21	1
	2-12-7 - 26	88
	2-13-6 - 60	REF
	2-15-2 - 13	2
MS21919WDG5	2-5-4 - 25	94
MS21919WDG6	2-5-4 - 29	45
MS21919WDG7	2-4-3 - 36	62
	2-13-6 - 61	REF
	2-13-6 - 62	REF
MS21919WDG8	2-3-16 - 40	1
	2-8-12 - 42	50
MS21919WDG9	2-5-4 - 23	44
MS21919WG24	2-9-5 - 54	1
MS21919WG4	2-15-1 - 27	6
MS21919WG6	2-15-1 - 29	4
MS21919WH16	2-8-10 - 12	5
MS21919WH3	2-11-2 - 2	2
	2-12-13 - 23	1
MS21919WH34	2-9-4 - 14	1
MS21919WH4	2-8-8 - 31	6
MS21919WH6	2-8-10 - 25	16
MS21919WH8	2-8-10 - 8	2
MS21921-6D	2-6-3 -	1
MS21922-6	2-6-3 -	1
MS21924-4	2-8-4 - 44	11
MS21924-6	2-8-10 - 40	3
MS21924D4	2-8-3 - 16	8
MS21924D6	2-8-4 - 42	4
MS21926-4	2-4-3 - 12	3
MS21926-4D	2-8-6 - 23	4
MS21926-6D	2-8-14 - 2	2
MS21926D6	2-8-10 - 98	2
MS22012-2	2-11-1 - 2	2
MS22012-3	2-11-1	1
	2-11-1	1
MS22055B24	2-11-1 -	1
	2-16-3 -	REF
MS22055H12	2-11-1 - 65	1
MS22055H24	2-11-1 - 71	2
MS22058-1	2-16-3 -	1
MS22058-2	2-11-1 -	1
MS22073-1	2-12-6 -113	2
MS22073-2	2-12-15 - 18	3
MS22073-3	2-12-6 -112	7
MS23006-2	2-12-25 - 16	1
MS23006-3	2-12-7 -	1
MS24149D1	2-12-1 - 36	REF
MS24308/2-3	2-13-6 - 58	1
MS24331-1	2-3-13 - 43	REF
MS24350-1	2-9-1 - 17	REF
MS24392-8	2-6-12 -	1
MS24399D7	2-6-13 - 2	1
	2-6-13 - 2	1
MS24456-1	2-7-12 - 3	2
	2-12-1 - 43	REF
	2-12-25 - 1	1
MS24461-6	2-7-8 - 13	4

PART NUMBER	FIG AND INDEX NO	QTY /AC
MS24523-22	2-12-14 -15	1
	2-12-27 - 3	1
	2-14-2 -84	1
MS24523-23	2-12-27 - 8	1
	2-12-27 -33	1
	2-13-4 - 3	1
MS24523-23G	2-12-14 -17	1
MS24523-30	2-12-9 -11	1
MS24524-26	2-12-9 -10	1
MS24525-21	2-12-14 -	1
MS24586-96	2-7-4 -51	1
MS24590-4	2-6-13 - 4	2
MS24658-230	2-14-1 -21	1
MS24658-23D	2-12-29 -17	1
MS24659-23D	2-12-29 -16	1
MS24660-23D	2-12-14 - 3	1
	2-14-5 - 1	1
MS24665-130	2-3-4 -	17
MS24665-132	2-1-8 -	136
MS24665-134	2-1-7 -	82
MS24665-136	2-4-2 -	69
MS24665-138	2-4-8 -	4
MS24665-140	2-16-4 -	4
MS24665-149	2-7-11 -	3
MS24665-150	2-16-4 -	2
MS24665-151	2-4-8 -	18
MS24665-153	2-1-4 -	10
MS24665-155	2-4-9 -	6
MS24665-283	2-7-8 -	6
MS24665-285	2-1-8 -	9
ms24665-285	2-8-14 -	2
MS24665-285	2-16-4 -	18
MS24665-287	2-4-2 -	10
MS24665-289	2-3-19 -	4
MS24665-300	2-4-8 -	4
MS24665-304	2-8-12 -	4
MS24665-306	2-3-6 -	4
MS24665-357	2-3-19 -	6
MS24665-359	2-1-2 -	4
MS24665-360	2-1-2 -	2
MS24665-368	2-7-4 -	4
MS24665-7	2-3-17 -	1
MS24692-102	2-7-9 -40	8
MS24692-105	2-7-9 -32	10
MS24692-108	2-7-8 -23	6
MS24692-111	2-7-3 -	132
MS24692-132	2-7-8 -49	12
MS24692-135	2-7-3 -	54
MS24692-138	2-7-8 -33	24
MS24692-153	2-4-4 -	2
MS24692-173P	2-6-10 -44	4
MS24692-187	2-7-15 - 7	6
MS24693-24	2-14-2 -	6
MS24693-25	2-12-16 -10	10
MS24693-269	2-4-7 -26	2
MS24693-270	2-2-4 -41	10
MS24693-271	2-2-4 -35	12
MS24693-272	2-2-1 - 7	47
MS24693-273	2-2-2 -10	12
MS24693-274	2-2-2 - 9	16
MS24693-278	2-12-23 -13	1
MS24693-28	2-12-23 -17	26
MS24693-29	2-6-10 -18	4
MS24693-296	2-13-2 -	4
MS24693-32	2-13-4 -	10
MS24693-33	2-13-4 -	2
MS24693-49	2-12-11 - 6	16
MS24693-50	2-12-23 -11	7
MS24693-51	2-3-4 -36	92
MS24693-52	2-12-10 -19	9
MS24693-54	2-13-5 -21	1
MS24693-55	2-16-4 - 6	2
MS24693-C26B	2-12-16 -14	5
MS24693-S2	2-12-14 -	3

PART NUMBER	FIG AND INDEX NO	QTY /AC
MS24693-S251	2-13-2 -	4
MS24693-S273	2-13-2 -	16
MS24693-S274	2-13-2 -	10
MS24693-S28	2-12-14 - 42	16
MS24693-S30	2-12-23 -	2
MS24693BB-31	2-14-2 -	2
MS24693BB-33	2-14-2 -	12
MS24693BB34	2-14-2 -	4
MS24693C271	2-5-3 - 25	15
MS24693C49	2-16-1 - 5	18
MS24693CB47	2-2-3 - 25	4
MS24693S26	2-4-6 - 5	18
MS24693S270	2-14-2 -	2
MS24693S28	2-7-11 - 47	2
MS24693S49	2-7-11 - 42	2
MS24694-3	2-4-11 - 14	2
MS24694-47	2-15-2 - 10	4
MS24694-49	2-4-7 - 23	4
MS24694-50	2-4-11 - 19	4
MS24694-51	2-2-3 - 15	4
MS24694-53	2-1-3 - 17	8
	2-6-11 - 11	10
	2-16-3 - 8	6
MS24694-54	2-4-7 - 6	10
MS24694-59	2-14-1 - 11	2
MS24694-62	2-16-4 - 4	2
MS24694-69	2-1-8 - 49	34
MS24694-79	2-1-8 -	4
MS24694-C55	2-3-8	2-
MS24694-C57	2-3-8	132-
MS24694S50	2-1-8 - 57	40
MS24694S53	2-13-2 -	12
MS24694S54	2-3-7 - 52	24
MS25010B11	2-14-1 - 26	4
MS25010B12A	2-7-19 - 8	4
	2-13-4 - 18	7
MS25010B16A	2-12-14 - 19	1
MS25011-1	2-8-5 - 8	1
MS25027-2	2-12-16 - 9	5
MS25036-101	2-12-25 -	1
MS25036-102	2-12-14 -	1
MS25036-133	2-12-7 -	2
	2-12-7 -	2
MS25041-1	2-13-4 - 6	1
MS25041-10	2-13-4 - 7	1
MS25041-4	2-12-14 - 18	3
	2-14-5 - 29	2
MS25041-6	2-14-2 - 44	1
MS25041-7	2-12-27 - 35	1
MS25068-21	2-12-14 - 7	1
MS25069-1495	2-12-16 - 11	6
MS25080-5	2-12-22 - 25	2
MS25082-21	2-13-4 -	4
MS25082-3	2-6-12 -	1
MS25083-2BC5	2-13-2 -	8
MS25085-1	2-7-18 - 25	REF
	2-12-25 - 52	1
MS25089-3C	2-12-14 - 5	1
	2-13-4 - 25	1
	2-14-2 - 76	REF
MS25089-3CR	2-12-14 - 16	1
	2-14-2 - 35	1
MS25089-4B	2-7-11 - 30	2
MS25089-4C	2-12-29 - 24	1
	2-14-1 - 38	1
	2-14-2 - 3	1
	2-14-2 - 30	1
	2-14-2 - 39	1
MS25089-5C	2-14-1 - 37	2
MS25128-1	2-12-11 - 27	3
MS25171-1S	2-12-23 - 9	4
MS25182-2	2-12-7 -123	1
MS25201-7	2-13-4 - 5	1
MS25219-13	2-12-25 - 16	1

PART NUMBER	FIG AND INDEX NO	QTY /AC
MS25219-4	2-12-1 - 2	REF
MS25224-1	2-12-14 -30	3
MS25224-3	2-12-3 -20	1
MS25226-4-2	2-12-15 -34	3
	2-12-27 -15	4
MS25226-4-3	2-12-15 -35	4
MS25226-4-4	2-12-15 -36	12
MS25231-313	2-12-11 -	2
MS25237-326	2-14-2 -	8
MS25237-327	2-7-19 - 9	4
	2-12-11 -	4
	2-12-29 -11	1
	2-12-29 -18	76
MS25237-328	2-12-29 -	2
	2-13-4 -	3
	2-14-2 -	2
MS25241-4553	2-12-23 - 8	2
MS25244-10	2-12-15 -23	4
MS25244-15	2-12-6 -60	1
	2-12-15 -24	3
MS25244-20	2-12-15 -25	1
MS25244-25	2-12-6 -61	3
MS25244-5	2-12-6 -59	7
	2-12-15 -21	53
	2-12-29 -15	1
MS25244-50	2-12-6 -62	3
MS25244-7	2-12-6 -63	1
MS25244-7-1/2	2-12-15 -22	6
MS25244-7.5	2-12-27 -14	1
MS25306-232	2-13-4 -19	1
MS25309-7512	2-12-23 -	2
MS25332-1	2-12-27 -24	8
MS25337-327	2-12-14 -	3
MS27037-1-09	2-3-7 - 8	2
MS27039-0808	2-12-13 -24	3
MS27039-0809	2-3-8 -32	1
MS27039-1-03	2-8-6 -	1
MS27039-1-06	2-2-4 -33	26
MS27039-1-07	2-2-4 -27	143
MS27039-1-08	2-3-7 -33	122
MS27039-1-09	2-2-4 -47	31
MS27039-1-10	2-6-7 -	6
MS27039-1-11	2-3-7 -68	15
MS27039-1-12	2-2-2 -11	17
MS27039-1-14	2-3-7 -13	16
MS27039-1-15	2-4-6 -18	2
MS27039-1-16	2-3-7 -14	16
MS27039-1-17	2-3-4 - 2	10
MS27039-1-19	2-9-4 - 6	2
MS27039-1-21	2-9-4 - 4	2
MS27039-1-23	2-9-4 - 2	2
MS27039-1-24	2-3-4 -24	4
	2-8-4 -	
MS27039-1-28	2-3-4 -18	5
MS27039-1-30	2-8-6 -14	4
MS27039-1-32	2-7-11 -26	1
MS27039-4-04	2-3-20 -13	8
MS27130A25K	2-6-12 -	4
MS27212-1-6	2-12-6 -27	3
MS27212-1-7	2-12-23 -68	4
MS27400-17	2-12-6 -73	1
	2-12-23 -30	1
	2-13-2 -51	3
MS27401-1	2-12-13 -18	2
MS27401-36	2-12-6 -74	2
MS27404-6D	2-6-13 -10	2
MS27473T18F-32S	2-13-3 - 4	1
MS27488-16	2-12-6 -	AR
	2-12-6 -	AR
	2-12-9 -	AR
	2-12-13 -	5
	2-12-23 -	AR
	2-12-23 -	AR

PART NUMBER	FIG AND INDEX NO	QTY /AC
MS27488-20	2-12-3 -	AR
	2-12-3 -	AR
	2-12-6 -	AR
	2-12-6 -	AR
	2-12-9 -	1
	2-12-9 -	AR
	2-12-9 -	13
	2-12-11 -	10
	2-12-12 -	8
	2-12-13 -	30
	2-12-18 -	4
	2-12-23 -	AR
	2-12-23 -	AR
	2-12-23 -	AR
	2-12-23 -	AR
	2-12-23 -	AR
	2-12-25 -	29
MS27488-22	2-12-9 -	AR
MS27641-10	2-7-6 -17	4
MS27641-12	2-1-8 - 7	2
MS27641-5	2-3-21 -11	8
MS27641-6	2-7-2 -19	10
MS27641-8	2-7-2 - 6	2
MS27643-4	2-1-4 -37	2
MS27643-6	2-1-3 -62	2
MS27645-3	2-1-9 - 3	2
MS27645-3A	2-1-8 - 9	4
MS27645-4	2-2-1 - 3	3
MS27645-5	2-2-3 -35	2
MS27648-21	2-7-7 - 5	3
MS27648-25	2-7-7 - 2	3
MS27648-33	2-7-6 - 2	2
	2-7-17 -23	2
MS27769D4	2-6-13 -23	1
MS27975-2	2-7-5 -26	2
MS27980-13C	2-12-15 - 3	20
MS27980-15N	2-3-8 - 7	2
MS28055-11	2-14-2 -	6
MS28055-12	2-14-3 -11	2
MS28741-3-0090	2-3-11 -25	REF
MS28741-4-0210	2-3-11 -24	REF
MS28741-4-0470	2-8-15 -14	1
MS28741-6-0400	2-8-15 -13	1
MS28741-8-0084	2-6-12 -19	2
MS28773-04	2-3-16 -30	1
	2-8-12 -	2
MS28774-007	2-8-9 -10	3
MS28774-010	2-8-4 -	15
MS28774-011	2-8-6 -	1
MS28774-012	2-8-4 -	1
MS28774-014	2-8-11 -	1
MS28774-016	2-8-9 - 3	18
MS28774-020	2-8-4 -	2
MS28774-023	2-8-4 -	2
MS28774-111	2-8-10 -	4
MS28774-112	2-8-10 -	2
MS28774-113	2-3-12 -29	4
MS28774-114	2-8-9 - 5	6
MS28774-115	2-8-6 -	1
MS28774-116	2-8-3 -	2
MS28774-118	2-8-6 -	1
MS28774-216	2-3-12 -32	4
MS28774-224	2-8-9 -	2
MS28775-004	2-8-6 - 2	2
MS28775-006	2-8-6 - 9	14
MS28775-007	2-8-3 -11	2
MS28775-008	2-8-9 - 9	6
MS28775-009	2-8-3 -13	3
MS28775-010	2-7-18 -	16
MS28775-011	2-8-6 -18	2
MS28775-012	2-4-3 -	29
MS28775-014	2-8-9 - 8	11
MS28775-015	2-8-3 -12	11
MS28775-016	2-8-3 - 2	21

PART NUMBER	FIG AND INDEX NO	QTY /AC
MS28775-017	2-8-11 - 2	4
MS28775-018	2-8-11 - 7	1
MS28775-020	2-8-4 - 13	2
MS28775-023	2-8-4 - 3	1
MS28775-028	2-8-3 - 6	2
MS28775-110	2-8-6 - 4	5
MS28775-111	2-8-6 - 10	9
MS28775-112	2-8-10 -	1
MS28775-113	2-3-12 - 28	6
MS28775-114	2-8-6 - 12	8
MS28775-115	2-8-6 - 17	3
MS28775-116	2-8-3 - 5	3
MS28775-117	2-8-6 - 20	1
MS28775-118	2-8-6 - 19	3
MS28775-123	2-8-6 -	1
MS28775-130	2-3-12 - 33	2
MS28775-213	2-8-3 - 3	1
MS28775-214	2-8-6 - 3	4
MS28775-216	2-3-12 - 31	3
MS28775-224	2-8-9 - 55	2
MS28777-4	2-4-3 -	17
MS28777-6	2-9-7 -	1
MS28778-04	2-8-12 - 3	2
MS28778-12	2-8-10 - 97	2
MS28778-16	2-8-8 -	1
MS28778-20	2-8-8 - 4	1
	2-8-8 -	1
MS28778-3	2-3-12 - 27	3
MS28778-4	2-3-11 - 14	30
	2-5-4 -	2
	2-6-11 - 8	2
	2-8-3 -	1
	2-8-3 -	2
	2-8-3 -	3
	2-8-6 -	4
	2-8-6 -	2
	2-8-6 - 21	1
	2-8-6 -	8
	2-8-6 -	1
	2-8-6 -	1
	2-8-8 -	1
	2-8-8 -	1
	2-8-8 -	1
	2-8-8 -	1
	2-8-12 -	2
	2-8-13 -	2
	2-8-13 -	6
	2-9-6 -	11
MS28778-5	2-8-8 -	1
MS28778-6	2-4-3 -	2
	2-8-8 -	1
	2-8-9 -	2
	2-8-9 -	3
	2-8-9 -	2
	2-8-9 -	3
	2-8-9 -	1
	2-8-9 -	1
	2-8-9 -	2
	2-8-9 -	2
	2-8-10 -101	2
	2-8-14 -	4
	2-8-14 -	2
	2-15-1 -	2
MS28778-8	2-6-11 - 3	2
	2-8-6 - 11	2
	2-8-8 -	1
	2-8-9 -	2
	2-8-9 -	1
	2-8-9 -	1
	2-8-9 -	1
	2-8-10 -	1
	2-8-10 -	1
MS28885-20	2-6-6 - 36	1
MS28885-4	2-6-6 - 7	1

PART NUMBER	FIG AND INDEX NO	QTY /AC
MS28932-2	2-3-12 -30	2
MS29470AD3-4	2-13-4 -53	2
MS29512-04	2-6-7 -	3
MS29512-05	2-6-7 -	23
MS29512-06	2-6-9 -14	2
MS29512-10	2-6-5 -	8
MS29512-12	2-6-7 -	7
MS29512-16	2-6-5 -	1
MS29512-4	2-6-5 -	3
MS29512-5	2-6-5 -41	1
MS29512-6	2-6-2 -36	7
MS29513-025	2-6-5 -30	1
MS29513-11	2-6-5 -26	1
MS29513-112	2-9-7 -	1
MS29513-115	2-6-5 -40	1
MS29513-118	2-6-5 -	2
MS29513-12	2-3-5 -35	86
MS29513-120	2-6-5 -12	2
MS29513-121	2-6-5 -27	1
MS29513-137	2-6-5 -	3
MS29513-210	2-6-9 - 7	2
MS29513-214	2-6-7 -	1
MS29513-215	2-6-5 -25	4
MS29513-235	2-6-5 -31	1
MS29513-248	2-6-2 -	4
MS29513-339	2-6-3 -	1
MS29513-8	2-6-5 -39	1
MS29513-9	2-6-5 -17	5
MS29513UDN024	2-6-5 -34	1
MS29513UDN910	2-6-5 -33	1
MS29528-6	2-6-2 -44	1
	2-6-3 -31	2
MS3102R16-8P	2-12-6 -89	1
MS3106R18-1P	2-6-10 -39	2
MS3115-8A	2-14-7 -22	1
MS3119E12-8	2-12-9 -40	1
MS3119E16-26	2-13-6 - 2	1
MS3119E20-16	2-12-3 -81	1
	2-12-9 -38	1
MS3119E20-41	2-12-3 -82	1
	2-13-4 -28	1
MS3119E24-61X	2-12-9 -41	1
MS3120E20-41S	2-12-12 -14	1
	2-14-1 -47	1
MS3122E10-6P	2-12-27 -18	1
MS3126F8-3S	2-12-20 -95	1
MS3181-16CA	2-12-3 -76	1
MS3181-18CA	2-12-3 -72	1
	2-13-4 -26	1
MS3181-20CA	2-13-4 -27	1
MS3181-8NA	2-14-7 -	1
MS32506-245	2-14-7 -	1
MS3320-3	2-12-15 -37	2
MS3367-2-9	2-6-2 -28	1
MS34076L12-10S	2-13-6 -56	1
MS3450KT20-27P	2-12-22 -88	1
	2-12-25 -19	1
MS3450KT24-12P	2-12-22 -85	1
MS3450L14S-5P	2-12-27 -41	1
MS3451/L18-1S	2-12-8 -12	2
MS3456L10SL-3S	2-6-8 -16	REF
	2-12-8 - 9	2
	2-12-8 -11	1
	2-12-8 -13	3
	2-12-8 -15	1
	2-12-17 - 2	1
	2-12-17 - 4	2
	2-12-17 -26	1
	2-12-17 -28	1
	2-12-17 -34	1
	2-12-17 -35	1
	2-12-17 -50	1
	2-12-18 -34	1
MS3456L10SL-4S	2-12-17 -18	1

PART NUMBER	FIG AND INDEX NO	QTY /AC
MS3456L14S-2S	2-6-7 -49	REF
	2-12-7 - 3	1
	2-12-17 - 5	1
	2-12-17 -30	1
	2-12-20 - 6	1
MS3456L14S-5S	2-12-17 -16	1
	2-12-22 -94	1
	2-12-28 -11	1
MS3456L16S-8S	2-12-7 - 6	1
MS3456L16S1S	2-12-17 -63	1
MS3456L18-1S	2-12-7 - 7	1
MS3456L20-27S	2-12-7 -14	1
	2-12-17 -15	1
MS3456L20-29S	2-12-7 -16	1
MS3456L24-11S	2-12-7 -13	2
MS3456L24-28S	2-12-17 -17	1
MS3456L28-12S	2-12-17 -27	1
	2-12-17 -32	1
MS3459KT20-27S	2-12-8 -16	1
	2-12-22 -93	1
MS3459KT24-12S	2-12-8 -61	1
MS3470L12-10S	2-12-7 - 1	1
	2-12-24 - 2	1
MS3470L12-3S	2-12-17 -82	1
MS3470L12-6S	2-12-24 -44	1
MS3470L14-15P	2-12-14 -52	1
MS3470L14-19P	2-12-14 -59	1
	2-12-29 - 2	1
MS3470L14-19S	2-12-17 - 7	1
	2-12-17 -53	1
MS3470L14-4P	2-12-6 -95	1
MS3470L16-8S	2-12-24 -47	1
MS3470L18-11P	2-12-14 -45	1
MS3470L18-32P	2-12-14 -44	1
MS3470L20-41S	2-12-17 -52	1
MS3470L22-21S	2-12-20 - 5	1
	2-12-20 -61	1
MS3470L24-31P	2-12-6 -81	1
MS3470L24-61P	2-12-6 -80	1
MS3470L8	2-14-7 -23	1
MS3470L8-33S	2-12-17 -10	1
MS3470W24-61P	2-12-25 - 2	1
MS3472L10-6P	2-12-27 -19	1
MS3476L10-6P	2-12-20 -96	1
MS3476L10-6S	2-12-7 - 4	1
	2-12-8 -62	1
	2-12-17 -72	1
	2-12-24 -43	1
	2-12-28 - 5	1
MS3476L10-6SW	2-12-7 - 5	1
MS3476L10-8S	2-12-22 -83	2
	2-12-24 - 1	1
MS3476L12-10P	2-4-3 -35	1
	2-4-7 -48	2
	2-12-7 - 2	REF
	2-12-24 - 3	REF
MS3476L12-10S	2-12-7 -11	1
	2-14-3 -15	2
MS3476L12-3P	2-12-20 -56	1
	2-12-22 -95	1
MS3476L12-3S	2-12-8 -10	1
	2-12-8 -14	1
	2-12-17 -12	1
	2-12-17 -44	1
	2-12-17 -57	1
	2-12-28 -12	2
MS3476L12-6P	2-12-24 -45	REF
MS3476L12-8P	2-12-17 -73	1
MS3476L14-12S	2-12-17 -47	1
	2-12-17 -58	1
MS3476L14-15S	2-12-17 -22	1
	2-12-17 -48	1
	2-12-22 -92	1
MS3476L14-19S	2-12-17 - 1	1

PART NUMBER	FIG AND INDEX NO	QTY /AC	PART NUMBER	FIG AND INDEX NO	QTY /AC	PART NUMBER	FIG AND INDEX NO	QTY /AC
	2-12-17 - 6	1		2-14-6 -16	REF		2-9-4 - 37	28
	2-12-17 -24	1	MS35059-21	2-14-1 -22	1		2-12-3 - 56	4
	2-12-17 -29	1	MS35059-23	2-12-14 - 6	4		2-12-6 - 26	27
	2-12-29 - 1	1		2-14-2 -34	1		2-12-7 -	3
	2-12-29 - 3	1	MS35059-26	2-12-14 - 4	1		2-12-9 - 47	137
	2-13-5 -11	1	MS35059-27	2-12-14 - 8	1		2-12-25 - 76	AR
MS3476L14-5S	2-12-8 - 8	1	MS35059-30	2-12-3 -21	1		2-12-27 - 2	60
	2-12-22 -89	2		2-13-3 - 2	1		2-13-6 - 73	REF
MS3476L16-26P	2-13-6 -54	1	MS3506-1	2-12-1 -32	REF	MS35207-264	2-4-6 -	207
MS3476L16-26S	2-12-20 -60	1		2-12-22 -87	1	MS35207-265	2-1-8 - 76	107
	2-13-6 -57	1	MS35206-213	2-12-14 -	32		2-12-24 - 37	1
MS3476L16-8P	2-12-18 -33	1	MS35206-214	2-12-6 -99	5		2-12-24 - 69	42
MS3476L16-8S	2-12-17 -56	1	MS35206-215	2-12-3 -32	80	MS35207-266	2-6-6 - 28	17
MS3476L18-11S	2-12-17 - 2	1	MS35206-216	2-13-6 - 3	4	MS35207-267	2-6-3 -	13
MS3476L18-32S	2-12-17 -20	1	MS35206-217	2-12-9 -42	85	MS35207-268	2-6-7 -	11
	2-12-17 -23	1	MS35206-218	2-14-1 -48	4	MS35207-269	2-6-12 - 7	49
	2-12-17 -25	1	MS35206-219	2-7-11 -38	10	MS35207-270	2-12-7 -105	7
	2-12-17 -31	1	MS35206-220	2-7-11 -35	2	MS35207-271	2-12-8 - 39	1
	2-12-17 -33	1	MS35206-226	2-3-20 -	2	MS35207-272	2-6-13 - 16	2
	2-12-17 -51	1	MS35206-227	2-12-3 -59	96	MS35207-273	2-12-7 -111	2
	2-13-5 - 3	1	MS35206-228	2-3-20 -	32		2-13-6 - 72	REF
	2-14-3 -16	1	MS35206-229	2-3-10 -16	18	MS35207-274	2-6-13 - 9	2
MS3476L20-16P	2-12-7 - 8	1		2-14-5 -	2		2-12-17 -109	1
	2-12-20 -58	1		3-9 -21	2	MS35207-279	2-6-13 - 18	2
MS3476L20-16PW	2-12-7 -12	1	MS35206-230	2-7-19 -12	79	MS35207-280	2-12-6 - 11	6
MS3476L20-16S	2-12-17 -36	1	MS35206-231	2-12-3 -	8	MS35207-281	2-12-18 - 24	2
	2-12-17 -40	1	MS35206-232	2-1-7 -24	12	MS35207-282	2-12-18 - 26	4
MS3476L20-16SW	2-12-17 -14	1	MS35206-233	2-14-3 -12	8	MS35207-284	3-3 -	4
MS3476L20-39P	2-12-7 -17	1	MS35206-234	2-1-7 -25	4	MS35207-285	2-12-25 - 49	2
	2-12-20 - 1	1	MS35206-235	2-12-13 -	2	MS35214-109	2-14-2 -	6
	2-12-20 -57	1	MS35206-241	2-9-5 -39	33	MS35214-17	2-14-4 - 15	6
MS3476L20-39S	2-12-17 - 9	1	MS35206-242	2-7-19 -19	14	MS35214-24	2-14-2 - 14	2
	2-12-17 -41	1	MS35206-243	2-12-3 -	29	MS35214-27	2-7-12 - 15	42
	2-12-17 -54	1	MS35206-244	2-12-5 -15	27	MS35214-28	2-12-15 - 31	
MS3476L20-41P	2-13-3 -10	2	MS35206-245	2-3-6 -29	2		2-13-5	2
	2-13-5 - 9	1		2-3-9 -48	541	MS35214-29	2-14-1 -	41
MS3476L20-41S	2-12-7 -18	1		2-13-6 -63	REF	MS35214-30	2-14-1 - 55	9
	2-12-17 -43	2		2-14-1 -14	44	MS35214-31	2-13-4 -	8
	2-13-3 -19	1	MS35206-246	2-6-6 -10	48	MS35214-42	2-13-4 - 23	3
	2-13-5 - 5	1	MS35206-247	2-3-21 -18	50	MS35215-57	2-10-1 -	10
	2-13-5 - 8	1	MS35206-248	2-4-11 -16	71	MS35218-42	2-1-3 - 65	20
	2-13-5 -10	1		2-13-6 -64	REF	MS35265-2	2-14-2 - 24	24
MS3476L20-41SW	2-13-5 - 2	1	MS35206-249	2-3-17 - 6	26	MS35265-43	2-12-6 -103	1
MS3476L20-41SX	2-13-3 -21	1		2-13-6 -65	REF	MS35273-30	2-12-14 - 22	5
MS3476L20-41W	2-13-3 -20	1	MS35206-250	2-12-7 -65	28	MS35276-269	2-13-2 -	16
MS3476L22-21P	2-12-20 - 2	1	MS35206-251	2-12-7 -38	26	MS35333-112	2-13-4 -	4
	2-12-20 - 4	1	MS35206-252	2-13-3 -98	1	MS35333-19	3-7 -	1
	2-12-20 -59	1	MS35206-258	2-12-7 -79	1	MS35333-36	3-4 -	1
	2-12-24 - 5	1	MS35206-261	2-13-6 -12	5	MS35333-38	2-4-9 -	8
	2-12-24 -46	1	MS35206-262	2-12-23 -27	4	MS35333-40	3-7 -	1
MS3476L22-21S	2-12-17 - 8	1	MS35206-264	2-3-16 -42	1	MS35335-31	2-9-8 -	1
	2-12-17 -55	1	MS35206-266	3-5 -11	2	MS35335-32	2-8-3 -	11
	2-12-22 -84	1	MS35206-268	2-11-2 - 3	2	MS35337-40	2-14-2 -	3
MS3476L22-41P	2-12-7 -10	1	MS35206-326	2-12-3 -	4	MS35338-10	2-13-6 - 18	1
MS3476L22-41PW	2-12-7 - 9	1	MS35206-328	2-8-5 - 9	2	MS35338-100	2-14-1 -	4
MS3476L22-41S	2-12-17 -42	1	MS35206-332	2-12-7 -49	10	MS35338-145	2-16-1 -	8
MS3476L22-41SW	2-12-17 -13	1	MS35206-333	2-12-8 - 5	9	MS35338-40	2-12-3 -	17
MS3476L22-55S	2-13-6 -55	1	MS35207-228	2-12-3 -22	4	MS35338-41	2-1-7 -	41
MS3476L24-31S	2-13-3 - 8	1	MS35207-230	2-3-4 -61	1	MS35338-42	2-3-21 -	49
MS3476L24-61P	2-12-7 -15	1	MS35207-242	2-16-4 -76	4	MS35338-43	2-1-8 -	171
MS3476L24-61PW	2-13-3 -23	1	MS35207-243	2-13-6 -28	4	MS35338-44	2-1-7 -	14
MS3476L24-61PX	2-13-3 - 9	1	MS35207-244	2-12-11 -40	6	MS35338-46	2-3-5 -	2
MS3476L24-61S	2-12-17 -39	1	MS35207-246	2-12-3 -65	1	MS35338-48	2-3-2 -	1
	2-13-3 - 7	1	MS35207-250	2-12-3 -68	1	MS35375-1	2-12-16 - 19	1
	2-13-5 - 1	1	MS35207-259	2-9-3 -20	6	MS35426-13	3-4 -	2
MS3476L24-61SW	2-12-17 -38	1	MS35207-260	2-2-4 -23	2	MS35426-14	3-8 - 38	1
MS3476L24-61SX	2-12-17 -62	1	MS35207-261	2-1-9 -11	39	MS35426-15	3-5 - 14	1
MS3476L8-33P	2-12-17 -76	1	MS35207-262	2-1-8 -21	71	MS35478-1683	2-12-25 - 16	1
MS350207-244	2-14-6 - 2	4		2-13-4 -77	4	MS35489-1	2-7-11 - 40	1
MS35058-22	2-13-4 - 4	1		2-14-4 - 2	6	MS35489-10	2-7-10 - 24	1
	2-14-5 -14	1	MS35207-263	2-3-4 -60	3	MS35489-11	2-1-3 - 67	20
MS35058-23	2-14-1 -23	3		2-3-18 -60	4	MS35489-12	2-6-5 - 45	3
MS35058-24	2-12-14 - 9	2		2-5-1 - 9	66	MS35489-135	2-12-7 - 32	1
MS35058-27	2-14-1 -18	2		2-8-16 - 5	3	MS35489-14	2-1-3 - 66	4

PART NUMBER	FIG AND INDEX NO	QTY /AC
MS35489-140	2-12-8 - 32	2
MS35489-149	2-12-7 - 72	2
MS35489-15	2-12-17 -120	3
MS35489-17	2-12-24 - 28	12
MS35489-2	2-5-4 - 28	2
MS35489-20	2-12-7 - 33	6
MS35489-22	2-16-4 - 54	8
MS35489-36	2-9-7 - 15	1
MS35489-37	2-12-7 - 22	1
MS35489-38	2-12-5 - 23	2
MS35489-6	2-5-4 - 7	23
MS35489-6S	2-6-5 - 15	1
MS35489-75	2-3-15 - 2	1
MS35489-8	2-8-11 - 58	4
MS35489-9	2-12-9 - 14	5
MS35649-2314	2-3-5 - 36	61
MS35649-242	2-14-1 -	4
MS35649-262	2-12-11 -	2
MS35649-282	2-12-7 -	43
MS35650-302	2-7-9 -	70
MS35650-3252	3-7 -	1
MS35790-17	2-15-2 -	4
MS37039-1-10	2-12-16 - 18	2
MS39087-303	2-13-2 - 33	2
	2-13-4 - 38	2
MS51496D04	2-13-4 -	4
MS514996D04	2-13-4 -	4
MS51957-128	2-11-1 - 6	2
MS51957-51	2-4-2 - 31	2
MS51958-1	2-3-16 - 45	1
MS51958-62	2-6-2 - 22	2
MS51958-63	2-5-6 - 11	6
MS51958-64	2-5-6 - 23	4
MS75009-30	2-12-10 - 7	2
MS75009-33	2-12-10 - 6	1
MS8000-E-0350A	2-16-3 - 31	2
MS83413/8-AO6BB	2-14-1 - 15	2
MS9015-04	2-8-8 - 14	1
MS90298-2	2-3-5 - 51	2
	2-12-18 - 6	1
MS9048-006	2-7-18 - 16	8
MS9048-036	2-7-9 - 41	4
MS9048-104	2-14-7 -	1
MS9058-04	2-8-3 -	20
MS9058-06	2-8-4 -	1
	2-8-9 -	3
	2-8-9 -	3
	2-8-9 -	1
	2-8-9 -	1
	2-8-10 -100	2
	2-8-14 -	2
MS9058-08	2-8-9 -	5
MT3513/APX	2-13-2 -	1
MT4781/ARN	2-13-2 - 4	1
MT4838ARC164	2-13-2 -	1
MT5116A	2-14-3 - 3	1
MT5154/ARN504V	2-13-2 - 1	1
MVT60050-10	2-5-3 -	2
MW21919WDG13	2-12-8 - 19	3
MX5163/ARN504V	2-13-2 - 2	1
N30A26	2-13-1 - 1	1
N50-250SH	2-9-5 - 6	1
	2-9-7 - 17	1
	2-9-7 - 32	1
NAR3000-N03	2-6-13 - 16	1
NAS1003-10	2-6-2 - 25	2
NAS1003-11	2-6-3 - 26	3
NAS1003-12A	2-3-8 - 48	6
NAS1003-13	2-6-3 - 27	1
NAS1003-14A	2-3-8 - 47	140
NAS1003-14H	2-3-12 - 9	4
NAS1003-19H	2-7-6 - 33	2
NAS1003-2A	2-5-3 - 8	38

PART NUMBER	FIG AND INDEX NO	QTY /AC
NAS1003-3	2-3-10 -36	8
NAS1003-58A	2-6-2 -41	4
NAS1003-6	2-3-10 -42	2
NAS1003-6A	2-5-3 -49	2
NAS1003-7	2-3-10 -43	2
NAS1004-10A	2-5-3 -44	4
NAS1004-16A	2-5-3 -32	4
NAS1004-16H	2-5-1 -16	1
NAS1004-2A	2-5-3 -51	4
NAS1004-5A	2-5-3 -29	36
NAS1004-6A	2-5-3 -	1
NAS1005-10A	2-4-7 -44	12
NAS1033A06	2-12-3 -60	12
NAS1033A08	2-13-2 -27	8
NAS1062-1	2-12-6 -	14
NAS1080-6	2-3-14 -	2
NAS1080-8	2-3-14 -	4
NAS1089-24	2-17-1 - 4	1
NAS1096-3-10	2-12-18 - 4	4
NAS1097AD3-4A	2-12-3 -	4
NAS1103-10D	2-1-8 -74	8
NAS1103-11D	2-1-9 - 4	14
NAS1103-12	2-7-2 -16	3
NAS1103-12D	2-4-4 -12	4
NAS1103-14	2-1-4 -46	8
NAS1103-14D	2-4-4 -13	2
NAS1103-15D	2-7-10 -33	2
NAS1103-16	2-3-5 -19	6
NAS1103-18	2-3-5 -41	4
NAS1103-19D	2-7-11 -45	1
NAS1103-2	2-7-2 -58	27
NAS1103-20	2-3-5 -42	4
NAS1103-21	2-7-15 -29	2
NAS1103-22	2-3-7 -55	1
NAS1103-29	2-3-5 -40	2
NAS1103-3	2-3-7 -57	16
NAS1103-4	2-1-4 -21	65
NAS1103-4D	2-8-5 - 4	1
NAS1103-5	2-3-7 -39	4
NAS1103-6	2-3-20 -22	30
NAS1103-7D	2-7-9 -35	4
NAS1103-8	2-3-17 -18	22
NAS1103-9D	2-3-9 - 5	6
NAS1104-13D	2-5-1 -10	1
NAS1105-11	2-3-13 -21	2
NAS1105-12D	2-2-3 -43	2
NAS1105-15	2-3-12 -34	2
NAS1105-21D	2-7-14 -14	4
NAS1105-24	2-3-12 -16	3
NAS1105-27D	2-2-3 -48	2
NAS1105-30	2-6-10 -40	2
NAS1105-30D	2-7-14 -23	2
NAS1105-49	2-6-10 -41	4
NAS1105-6	2-3-8 -39	1
NAS1105-7	2-3-13 - 6	2
NAS1105-8D	2-7-6 -14	4
NAS1106-24	2-2-1 - 9	2
NAS1106-28	2-2-1 -12	1
NAS1106-32D	2-7-8 -20	2
NAS1106-46	2-2-1 -13	1
NAS1106-58D	2-7-2 -38	1
NAS1106-6	2-12-7 -55	3
NAS1106-68D	2-7-2 -37	1
NAS1106-7	2-16-3 - 3	4
NAS1106-9	2-1-3 -35	3
NAS1107-17D	2-4-9 -41	REF
	2-8-12 -19	2
NAS1108-44D	2-7-2 - 8	1
NAS1110-27D	2-4-1 -18	REF
	2-4-2 -27	2
	2-4-8 -32	REF
NAS1149-FN416	2-12-24 -	4
NAS1149C0316R	2-12-3 -	4
NAS1149C063R	2-7-10 -25	1

PART NUMBER	FIG AND INDEX NO	QTY /AC
NAS1149C332R	2-13-6 -12	1
NAS1149D0332J	2-6-13 -	6
	2-6-13 -	6
	2-13-2 -	8
NAS1149D0332K	2-12-3 -	116
NAS1149D0332P	2-12-25 -	2
NAS1149D0363H	2-12-7 -	28
	2-12-11 -	1
	2-12-13 -	58
NAS1149D0363J	2-13-6 -33	6
NAS1149D0432J	2-6-13 -	2
NAS1149D0436K	2-3-3 -	14
NAS1149D0463K	2-12-3 -	4
NAS1149D0632K	2-12-3 -	4
NAS1149D0663H	2-12-7 -	3
NAS1149DF0332P	2-12-24 -	2
NAS1149DH432K	2-12-3 -	2
NAS1149DN416K	2-12-6 -	6
NAS1149DN432K	2-12-3 -	24
NAS1149DN616K	2-12-9 -	40
NAS1149DN632K	2-12-6 -	3
NAS1149F0332	2-12-20 -	7
NAS1149F0332P	2-12-7 -	31
	2-12-11 -	2
	2-12-13 -	79
NAS1149F0363P	2-13-6 -18	1
NAS1149FD0363H	2-12-28 -	6
NAS1149FN332P	2-12-8 -	1
NAS1149FN416P	2-12-6 -	154
NAS1149FN432P	2-13-6 - 3	4
NAS1149FN616P	2-12-6 -	74
	2-14-5 -	2
NAS1149FN816P	2-4-3 -	768
NAS1149FN832P	2-12-6 -	16
NAS1154-6	2-1-3 -48	4
NAS1155-6	2-1-3 -	
NAS1169DD10L	2-16-3 -	2
NAS1201B6-12	2-1-7 -11	4
NAS1201B6A11A	2-9-3 -31	1
NAS1201B6A6A	2-6-8 -	1
NAS1201B6A8A	2-9-3 -28	2
NAS1201C10B10B	2-3-6 -80	2
NAS1201C6-10	2-3-9 -24	6
NAS1201C6A78	2-3-18 -42	4
NAS1201C6B5	2-3-20 -67	1
NAS1202-2	2-3-10 -83	46
NAS1202-26	2-4-10 - 6	2
NAS1202-3	2-1-4 -76	35
NAS1202-4	2-3-9 -39	5
NAS1202-6	2-3-10 -75	2
NAS1203-1	2-1-8 -42	10
NAS1203-10	2-1-3 -60	32
NAS1203-12	2-3-10 -77	22
NAS1203-14	2-16-4 -17	2
NAS1203-2	2-1-5 -14	373
NAS1203-20	2-1-8 -	30
NAS1203-3	2-1-1 -21	487
NAS1203-4	2-1-5 -28	85
NAS1203-5	2-1-6 - 3	20
NAS1203-6	2-1-4 -30	8
NAS1203-7	2-3-6 -	136
NAS1203-8	2-3-6 -75	128
NAS1203-9	2-3-2 -49	18
NAS1204-1	2-1-4 - 5	12
NAS1204-10	2-4-10 -13	4
NAS1204-12D	2-7-11 -18	1
NAS1204-15	2-1-3 -37	12
NAS1204-25	2-7-6 -38	1
NAS1204-26	2-3-2 -35	2
NAS1204-29	2-3-2 -36	2
NAS1204-3	2-13-2 -	6
NAS1204-32	2-3-2 -34	2
	2-3-6 -87	REF
NAS1204-5	2-16-4 -10	4

PART NUMBER	FIG AND INDEX NO	QTY /AC	PART NUMBER	FIG AND INDEX NO	QTY /AC	PART NUMBER	FIG AND INDEX NO	QTY /AC
NAS1204-8	2-4-10 - 14	4		2-13-3 -36	9	NAS43HT4-12	2-3-13 -27	2
NAS1205-8	2-16-3 - 2	4	NAS43DD-3-4D	2-12-7 -50	4	NAS43HT4-18	2-13-2 -	4
NAS1291C08	2-3-16 -	1	NAS43DD-3-5	2-12-24 -61	2	NAS43HT4-7	2-5-1 -11	1
NAS1303-8H	2-5-2 - 8	6	NAS43DD-3-56	2-13-3 -	1	NAS43P38-05	2-8-15 -22	1
NAS1334A2S13D	2-17-1 - 11	1	NAS43DD-3-64	2-12-7 -77	16	NAS43P38-050	2-8-15 -10	1
NAS1334A5S12D	2-17-1 -	1	NAS43DD-48	2-12-20 -	2		2-8-15 -17	2
NAS1334A5S1.3	2-16-4 - 66	4	NAS43DD0-24	2-7-11 -39	4	NAS460-416	2-3-4 -	2
NAS1334S6S18	2-3-18 - 43	4	NAS43DD1-20	2-12-10 -20	8	NAS464-4A8	2-3-6 -50	6
NAS1336A2S24	2-17-1 - 7	2	NAS43DD1-56	2-12-13 -	2	NAS464-4A9	2-3-6 -51	6
NAS1337S3S07	3-3 - 15	1	NAS43DD10-17	2-7-8 - 9	2	NAS464P4-14	2-5-2 -18	4
NAS1351-3H6	2-9-7 - 27	6	NAS43DD10-64	2-7-19 -	1	NAS464P4-17	2-7-5 -24	4
NAS1354DC2C47	2-17-1 - 15	2	NAS43DD10-7	2-7-8 -10	2	NAS464P4A12	2-3-16 - 8	4
NAS1407P7M8	2-6-10 -	2	NAS43DD10-87	2-7-12 - 8	1	NAS464P4A7	2-3-20 -36	8
NAS1544-123	2-6-5 -	1	NAS43DD12-6	2-7-4 -15	4	NAS464P4A8	2-3-20 -35	8
NAS1593-111	2-6-9 - 15	2	NAS43DD3-10	2-16-3 -	4	NAS464P5A20	2-3-2 - 5	1
NAS1598-3Y	2-6-7 -	1	NAS43DD3-11	2-7-4 -	2		2-3-11 -22	REF
NAS1669-08-4	2-8-15 - 33	2	NAS43DD3-12	2-10-1 -13	8	NAS464P5A9	2-3-20 -34	8
NAS1669-08-5	2-8-15 - 34	2	NAS43DD3-13	2-7-10 -	1	NAS464P5LA32	2-16-4 -27	8
NAS1714D2-4S	2-12-23 - 44	1	NAS43DD3-14	2-3-7 -11	2	NAS464P6-33	2-7-2 -20	1
NAS1714D24S	2-12-9 - 27	1	NAS43DD3-16	2-3-10 -51	12	NAS464P6LA32	2-16-4 -58	8
NAS1715D4S	2-12-9 - 26	1		2-12-22 -21	1	NAS464P7-62	2-3-6 -59	4
NAS1831A6E32	2-14-2 - 70	4		2-12-25 -63	2	NAS487-13	2-14-1 -	15
NAS1831AC6E14	2-12-9 - 48	4		2-16-3 -	4	NAS487-15	2-13-4 -	90
NAS221-12	2-3-7 - 36	2	NAS43DD3-20	2-10-1 -12	2	NAS487-16	2-14-1 -	4
NAS226-8	2-3-20 - 8	1		2-13-6 -48	2	NAS487-21	2-14-2 -	4
NAS3003-12	2-3-5 -	4	NAS43DD3-24	2-3-7 -12	8	NAS501-3-4A	2-16-1 -18	6
NAS3003-13	2-3-5 -	6		2-12-22 -10	7	NAS501-3-6	2-5-5 - 4	3
NAS3003-15	2-3-5 -	4		2-13-6 -66	REF	NAS501-3-6A	2-16-4 -73	2
NAS3003-8	2-3-5 -	8	NAS43DD3-26	2-12-25 -66	3	NAS501-4-4A	2-5-5 -19	3
NAS333CPA4	2-3-6 -	8	NAS43DD3-28	2-12-3 -	4	NAS509-10	2-5-2 -16	2
NAS333CPA4-5	2-3-6 - 71	8		2-15-2 -	17	NAS509-4	2-4-4 -	26
NAS333CPA5	2-3-10 - 8	28	NAS43DD3-32	2-6-3 -	9	NAS509-5	2-5-3 -39	12
NAS427K14	2-3-17 - 11	2		2-13-5	1-	NAS509-6	2-5-2 -	38
NAS427K9	2-7-4 - 35	5	NAS43DD3-35	2-8-10 -	2	NAS509-7	2-7-14 -19	2
NAS428-3-5	2-3-21 - 2	2	NAS43DD3-36	2-7-10 -	2	NAS509-8	2-3-13 -20	1
NAS428-4-12	2-3-4 - 16	4	NAS43DD3-37	2-8-9 -	2	NAS509L4	2-7-9 -	6
NAS428-4-16	2-1-9 - 7	4	NAS43DD3-39	2-9-4 - 7	2	NAS509L5	2-5-3 -41	8
NAS428-5-12	2-7-6 - 13	2	NAS43DD3-4	2-3-4 -29	5	NAS509L6	2-5-2 -	3
NAS428-5-20	2-7-6 - 12	2	NAS43DD3-40	2-8-7 -26	2	NAS513-5	2-7-9 -	2
NAS428H3-7	2-7-9 - 19	4	NAS43DD3-46	2-8-7 -31	1	NAS517-3-1	2-3-2 -14	32
NAS428H5-14	2-7-5 - 12	4	NAS43DD3-47	2-9-4 - 5	2	NAS517-3-3	2-6-11 - 6	24
NAS428H5-20	2-7-6 -		NAS43DD3-48	2-8-10 -	2	NAS517-4-27	2-2-2 -23	2
NAS428K5-11	2-7-15 - 39	2		2-12-18 -13	1	NAS528A6	2-7-4 -	2
NAS428KH4-10	2-7-9 - 20	2		2-12-22 -23	2	NAS560CK3P10	2-3-10 -71	51
NAS428KH4-12	2-7-10 - 11	1	NAS43DD3-50	2-9-5 -	1	NAS560CK3P11	2-3-10 -78	57
NAS428KH4-6	2-7-9 - 21	2	NAS43DD3-52	2-9-5 -24	1	NAS560CK3P27	2-10-1 -20	2
NAS42DD5-45	2-16-4 - 5	2	NAS43DD3-58	2-7-10 -	1	NAS560CK3P7	2-3-10 -74	6
NAS42DD6-200	2-6-2 -	4	NAS43DD3-60	2-9-4 - 3	2	NAS560CK3P8	2-3-10 -69	44
NAS43-10-102	2-7-6 - 18	2	NAS43DD3-64	2-3-7 -56	2	NAS560CK3P9	2-3-10 -70	20
NAS43-3-16	2-12-22 - 42	22	NAS43DD3-8	2-12-16 -16	6	NAS560HK3-2	2-1-6 -36	52
NAS43-3-32	2-8-10 - 67	5	NAS43DD3-9	2-3-4 -19	8	NAS561-2-11	2-7-13 -	1
NAS43-3-37	2-8-9 -	2	NAS43DD4-10	2-3-17 -10	4	NAS561-2-7	2-9-5 -29	4
NAS43-3-40	2-12-22 - 82	4	NAS43DD4-12	2-7-13 -44	1	NAS561-6-22	2-4-8 -	2
NAS43-3-43	2-14-1 -	2	NAS43DD4-16	2-7-13 -	4	NAS561C4-8	2-3-17 -20	2
NAS43-3-48	2-12-22 - 46	6		2-8-15 -31	1	NAS561C6-22	2-3-15 -28	1
NAS43-3-5	2-3-4 - 10	2	NAS43DD4-19	2-7-13 -32	1	NAS561C6-48	2-3-15 -15	1
NAS43-3-56	2-3-4 -		NAS43DD4-24	2-12-6 -22	2	NAS561C812	2-3-10 -66	4
NAS43-3-63	2-3-4 -		NAS43DD4-256	2-2-1 -22	1	NAS561P2-10	2-4-11 -28	4
	2-3-4 -		NAS43DD4-26	2-12-6 -23	6	NAS561P2-16	2-7-11 -	1
NAS43-4-129	2-3-8 -	2	NAS43DD4-35	2-4-5 - 3	4	NAS561P2-6	2-7-4 -	2
NAS43-4-21	2-4-9 -	4	NAS43DD4-64	2-8-5 - 7	1	NAS561P2-7	2-4-4 -	2
NAS43DD-0-16	2-12-27 - 27	4	NAS43DD4-7	2-7-9 -27	2	NAS561P2-9	2-3-4 - 8	2
NAS43DD-3-12	2-12-17 -110	2	NAS43DD4-8	2-14-1 -	1	NAS561P3-18	2-4-4 - 4	2
NAS43DD-3-16	2-12-17 - 95	5	NAS43DD5-48	2-3-8 -	2	NAS561P3-5	3-5 -15	1
	2-12-22 - 61	5	NAS43DD6-9	2-3-15 -31	1	NAS561P3-7	3-4 -49	1
	2-13-3 -	3	NAS43DD8-76	2-7-2 - 5	1	NAS561P3-8	3-3 -	5
NAS43DD-3-24	2-12-7 - 25	10	NAS43DD9-63	2-3-12 -36	4	NAS561P3-9	3-9 - 8	2
	2-13-3 -118	1	NAS43HT2-39	2-7-4 -	1	NAS561P4-10	2-4-11 -40	2
NAS43DD-3-28	2-12-20 - 80	2	NAS43HT3-14	2-5-6 -24	4	NAS561P4-13	3-7 - 9	1
NAS43DD-3-32	2-12-7 - 43	55	NAS43HT3-4	2-12-10 -15	2	NAS561P4-16	2-4-9 -12	4
NAS43DD-3-36	2-13-3 - 95	1	NAS43HT3-56	2-3-4 -20	4	NAS561P4-18	2-8-4 -38	2
NAS43DD-3-40	2-12-8 - 23	5		2-3-4 -20		NAS561P4-8	2-4-7 -42	4
NAS43DD-3-48	2-12-7 - 39	8	NAS43HT3-63	2-3-4 -14	4	NAS561P5-30	2-3-12 -18	1
	2-12-20 - 21	8		2-3-4 -25	4	NAS561P6-15	3-1 - 4	1

PART NUMBER	FIG AND INDEX NO	QTY /AC
NAS561P6-24	3-3 -	2
NAS600-10	2-12-27 -25	4
NAS600-6	2-12-27 -20	8
NAS6203-10	2-3-4 -	4
NAS6203-2	2-3-7 -48	149
NAS6203-28	2-6-12 -25	4
NAS6203-4	2-3-21 - 5	36
NAS6203-6	2-6-12 -26	12
NAS6204-10	2-1-3 -52	12
	2-4-6 -21	REF
	2-7-5 -13	4
NAS6204-10D	2-4-5 -12	6
NAS6204-11	2-1-3 -53	6
NAS6204-11D	2-2-3 -44	6
NAS6204-12	2-3-14 - 2	1
NAS6204-12D	2-4-5 -15	3
NAS6204-13	2-7-4 - 6	16
NAS6204-13D	2-2-1 - 4	19
	2-7-10 -55	REF
	2-7-16 -41	2
NAS6204-14	2-5-1 - 5	1
	2-5-2 -24	REF
NAS6204-14D	2-7-2 -12	11
NAS6204-15D	2-5-1 - 4	1
	2-5-2 -23	REF
	2-7-8 -54	22
	2-8-6 -63	REF
NAS6204-16	2-1-3 -36	11
NAS6204-16D	2-7-3 -38	22
NAS6204-17D	2-3-13 -26	2
NAS6204-18	2-1-4 -42	14
NAS6204-18D	2-4-10 -16	6
NAS6204-19	2-1-4 -79	REF
	2-1-7 -26	2
NAS6204-19D	2-1-7 -20	2
NAS6204-2	2-12-3 -37	1
NAS6204-20D	2-4-10 -17	3
NAS6204-21	2-7-17 -45	2
NAS6204-22D	2-4-5 - 4	2
NAS6204-23D	2-2-3 -49	6
NAS6204-24	2-3-12 -22	2
NAS6204-24D	2-4-9 -36	3
	2-7-10 -54	REF
	2-7-13 -29	2
NAS6204-25D	2-1-7 -18	2
NAS6204-26D	2-7-8 -51	1
NAS6204-28D	2-1-7 -19	6
NAS6204-3	2-3-12 - 3	21
NAS6204-32D	2-7-4 -19	4
NAS6204-34	2-5-2 - 5	2
NAS6204-34D	2-7-6 - 8	3
NAS6204-36	2-1-8 -64	8
NAS6204-38	2-1-8 -65	2
NAS6204-4	2-1-3 -56	20
NAS6204-40	2-7-17 -30	2
NAS6204-42	2-3-13 -17	1
NAS6204-44	2-4-2 -24	4
NAS6204-5	2-1-3 -55	34
NAS6204-50	2-2-1 - 5	3
NAS6204-50D	2-1-4 -54	2
NAS6204-6	2-3-8 -40	13
NAS6204-7	2-3-10 -53	6
NAS6204-7D	2-7-6 - 9	4
NAS6204-8	2-1-3 -54	11
NAS6204-84	2-2-1 -23	1
NAS6204-8D	2-7-6 - 7	4
NAS6204-9	2-1-3 -38	16
NAS6205-36D	2-3-21 -13	2
NAS6205-38D	2-3-21 -14	2
NAS6206-28D	2-8-13 - 7	2
NAS6206-29D	2-1-8 -66	2
NAS6208-11D	2-8-14 - 5	2
NAS6208-18D	2-8-14 - 4	2
NAS6209-22D	2-1-2 - 5	2

PART NUMBER	FIG AND INDEX NO	QTY /AC
NAS623-2-1	2-1-8 -68	12
NAS623-2-2	2-1-4 -68	22
	2-3-15 -	AR
	2-5-5 -22	13
NAS623-2-5	2-7-4 -25	2
NAS623-2-6	2-2-2 -28	5
NAS623-3-1	2-1-3 -	96
NAS623-3-10	2-1-5 - 4	4
NAS623-3-11	2-3-4 - 9	3
NAS623-3-12	2-2-2 -15	6
NAS623-3-13	2-1-4 -39	16
NAS623-3-14	2-3-10 - 6	8
NAS623-3-15	2-2-4 - 4	12
NAS623-3-16	2-2-4 -19	14
NAS623-3-17	2-2-4 - 5	16
NAS623-3-19	2-2-4 - 6	2
NAS623-3-2	2-1-1 -14	60
	2-1-5 -34	REF
	2-1-7 -16	161
NAS623-3-20	2-8-7 -16	3
NAS623-3-21	2-4-8 -34	REF
	2-4-9 -44	REF
	2-8-4 -61	13
NAS623-3-22	2-8-4 -66	3
NAS623-3-23	2-8-7 -19	1
NAS623-3-24	2-3-7 -62	2
NAS623-3-26	2-3-7 -63	2
NAS623-3-3	2-1-4 -56	288
NAS623-3-30	2-8-7 -35	1
NAS623-3-31	2-8-9 -59	8
NAS623-3-32	2-8-7 -34	1
NAS623-3-34	2-8-4 - 7	7
NAS623-3-4	2-1-4 -28	92
NAS623-3-5	2-1-3 -12	52
NAS623-3-6	2-1-4 -29	20
NAS623-3-66	2-8-8 -15	2
NAS623-3-7	2-1-4 -24	60
NAS623-3-8	2-1-4 -23	25
NAS623-3-9	2-2-2 -16	10
NAS623-4-11	2-7-12 -13	2
NAS623-4-12	2-1-8 -73	4
NAS623-4-26	2-2-2 -21	6
NAS623-4-3	2-3-6 -89	2
NAS623-4-42	2-8-4 -41	2
NAS623-4-5	2-14-3 - 7	3
NAS623-4-8	2-1-8 -25	2
NAS623-4-9	2-7-11 -37	2
NAS624H7	2-4-2 - 3	8
	2-4-3 -34	REF
NAS625H32	2-4-2 -26	8
NAS626-22	2-5-2 - 9	4
NAS645-8LS	2-7-4 -46	1
NAS649B8S	2-7-4 -47	1
NAS651-16S	2-7-4 -	1
NAS6604-12	2-12-3 -	4
NAS6606-6	2-12-3 -	4
NAS669-100	2-2-3 - 4	2
NAS679A06W	2-12-12 -	2
NAS679A3	2-6-11 -	7
	2-12-7 -	4
NAS679A3W	2-12-23 -	8
NAS679A7	2-4-7 -	2
NAS679C3W	2-16-3 -	2
NAS684A08	2-3-17 -	3
NAS689P6-5	2-1-3 -	4
NAS689P7-5	2-1-3 -	4
NAS75-4-005	2-2-2 -18	6
NAS75-4-008	2-2-2 -14	8
NAS75-5-031	2-3-21 -12	4
NAS75-6-008	2-2-2 - 4	4
NAS75-6-011	2-2-2 - 2	2
NAS75-8-009	2-3-21 -	4
NAS75-9-009	2-3-5 -31	4
NAS77-4-18	2-6-10 -47	4

PART NUMBER	FIG AND INDEX NO	QTY /AC
NAS77-5-25	2-3-20 -	8
NAS77-8-25	2-3-20 -	4
NH1000206	2-5-3 - 9	1
NO NUMBER	2-1-3 - 28	6
	2-1-6 - 11	2
	2-1-6 - 12	2
	2-3-2 - 13	2
	2-3-2 - 23	1
	2-3-2 - 24	1
	2-3-2 - 27	1
	2-3-3 - 3	2
	2-3-3 -	2
	2-3-6 -	1
	2-3-9 - 47	2
	2-3-9 -	1
	2-3-10 -105	2
	2-3-10 -106	1
	2-3-17 -	NP
	2-3-17 - 27	1
	2-3-20 - 55	1
	2-3-20 -	1
	2-4-3 - 21	1
	2-4-3 -	1
	2-7-5 - 5	4
	2-7-11 - 16	1
	2-8-8 - 23	1
	2-8-8 - 38	1
	2-8-10 - 83	1
	2-8-14 - 22	1
	2-9-7 - 5	1
	2-9-8 -	1
	2-9-8 -	1
	2-11-1 -	2
	2-11-1 - 84	REF
	2-12-5 - 7	AR
	2-12-6 - 43	2
	2-12-7 -120	1
	2-12-11 - 4	1
	2-12-11 - 5	AR
	2-12-12 - 3	1
	2-12-12 - 4	AR
	2-12-12 - 23	1
	2-12-13 - 19	1
	2-12-16 - 7	2
	2-12-16 - 26	1
	2-12-22 - 13	2
	2-12-25 - 75	AR
	2-13-1 -	NP
	2-13-4 - 10	1
	2-13-4 -	1
	2-13-4 - 21	2
	2-14-1 - 30	1
	2-14-1 - 33	1
	2-14-1 - 53	1
	2-14-1 - 56	1
	2-14-5 - 25	1
	2-14-7 -	AR-
	2-14-7 -	AR-
	2-14-7 - 4	1
	2-14-7 -	AR
	2-14-7 -	AR-
	2-14-7 - 20	NP
	2-16-1 - 15	2
	2-16-1 - 41	1
	2-16-1 - 42	1
	2-16-1 - 43	1
	2-16-1 - 48	1
	2-16-2 - 29	8
	2-17-2 -	2
NR8	2-14-7 -	3
NW4505001-1	2-14-3 - 8	1
NW4513009-1	2-12-29 - 19	1
NW4513010-1	2-12-29 - 25	1
NW4513011-1	2-12-29 - 22	1

PART NUMBER	FIG AND INDEX NO	QTY /AC
NW4513012-1	2-12-29 -23	1
NW4513013-1	2-12-29 -	NP
NW4513014-1	2-14-6 - 1	1
NW4513015-1	2-14-6 - 3	1
NW4513016-1	2-7-19 -20	1
NW4513018-1	2-7-19 -	NP
NW4513020-1	2-7-19 - 2	1
NW4513021-1	2-7-19 - 3	2
NW4513022-1	2-7-19 -	1
	2-7-19 - 1	1
NW4513023-1	2-7-19 -	1
NW4513024-1	2-7-19 -10	1
NW4513029-1	2-7-19 -14	1
NW451303-6	2-14-6 -	1
NW4513030-1	2-7-19 - 5	1
NW4513033-1	2-14-6 -	1
NW4513033-2	2-14-6 -	1
NW4513033-3	2-14-6 -	1
NW4513033-4	2-14-6 -	1
NW4513033-5	2-14-6 -	1
NW4513036-1	2-14-5 -23	REF
	2-14-6 -	NP
NW4513037-1	2-7-19 -17	1
NW4513038-1	2-7-19 -	REF
NW4513041-1	2-7-19 - 7	1
NW4513042-1	2-7-19 -11	1
NW4513043-1	2-7-19 - 6	1
NW4513049-1	2-14-6 - 9	1
NW4513050-1	2-14-5 -24	REF
	2-14-6 -	NP
NW4513051-1	2-14-6 -12	1
NW4513051-2	2-14-6 -11	1
NW4513052-1	2-14-6 -10	1
NW4513053-1	2-14-1 -52	1
NW4513054-1	2-12-29 -	NP
NW4513055-1	2-8-15 -	NP
NW4513062-1	2-14-5 -17	1
NW4513063-1	2-14-5 -16	1
NW4513064-1	2-14-5 -20	1
NW4513065-1	2-14-5 -	NP
NW4513066-1	2-14-5 - 7	1
NW4513066-2	2-14-5 - 9	1
NW4513067-1	2-14-5 - 4	1
NW4513069-1	2-8-15 - 1	1
NW4513069-2	2-8-15 - 3	1
NW4513069-3	2-8-15 -24	1
NW4513069-4	2-8-15 - 2	1
NW4513069-5	2-8-15 - 4	1
NW4513069-6	2-8-15 - 6	1
NW4513069-7	2-8-15 -25	1
NW4513070-1	2-8-15 -	NP
NW4513071-1	2-14-5 -	NP
NW4513072-1	2-14-5 - 5	1
NW4513073-1	2-14-5 -	1
NW4513074-1	2-14-5 - 3	1
NW4513076-1	2-14-5 -	NP
NW4513077-1	2-14-5 - 6	1
NW4513077-2	2-14-5 - 8	1
NW4513081-1	2-8-16 -	NP
NW4513082-1	2-11-2 - 1	1
NW4513083-1	2-11-2 -	NP
NW4513084-1	2-8-16 -	REF
NW4513086-1	2-14-5 -	NP
NW4513102-1	2-14-5 -15	1
NW4513111-1	2-12-29 -21	1
NW4513200-1	1-1 -	REF
	2-7-19 -	REF
	2-8-15 -	REF
	2-8-16 -	REF
	2-11-2 -	REF
	2-12-29 -	REF
	2-14-5 -	REF
NW4513203-1	2-12-29 -	NP
NW4513204-1	2-14-5 -19	1

PART NUMBER	FIG AND INDEX NO	QTY /AC
NW4513205-1	2-12-29 -	NP
NW4513296-1	2-12-29 -	REF
NW4513297-1	2-12-29 -	REF
NW4513298-1	2-12-29 -	REF
NW4514001-1	2-12-27 -	NP
NW4514002-1	2-12-27 -29	1
NW4514003-1	2-12-27 -30	1
NW4514004-1	2-12-27 -	1
NW4514005-1	2-12-27 -16	1
NW4514006-1	2-12-27 -	1
NW4514013-1	2-12-27 - 4	1
NW4514014-1	2-12-27 - 1	1
NW4514015-1	2-12-27 - 9	1
NW4514016-1	2-12-27 - 7	1
NW4514017-1	2-12-27 -	NP
NW4514019-1	2-12-27 -39	1
NW4514019-2	2-12-27 -40	1
NW4514020-1	2-12-27 -	NP
NW4514021-1	2-12-27 - 5	1
NW4514022-1	2-12-27 -10	1
NW4514024-1	2-12-27 -11	1
	2-14-5 -26	1
NW4514024-2	2-12-27 -	1
	2-14-5 -27	1
NW4514025	2-14-5 -	REF
NW4514025-1	2-12-27 -	NP
NW4514040-1	2-6-12 -	1
NW4514041-1	2-6-12 -	1
NW4514043-1	2-6-12 -13	4
NW4514044-1	2-6-12 -14	1
NW4514045-1	2-6-12 -15	1
NW4514046-1	2-6-12 -20	2
NW4514047-1	2-6-12 -23	1
NW4514048-1	2-6-12 -	1
NW4514053-1	2-6-12 -24	1
NW4514054-1	2-6-12 -	1
NW4514055-1	2-6-13 -26	1
NW4514056-1	2-6-13 -27	1
NW4514057-1	2-6-13 -28	1
NW4514058-1	2-6-12 -28	REF
NW4514059-1	2-6-13 -21	1
NW4514059-2	2-6-13 -12	1
	2-6-13 -	1
NW4514059-3	2-6-12 - 1	1
NW4514059-4	2-6-12 -	1
NW4514059-5	2-6-12 - 3	1
NW4514059-6	2-6-12 - 4	1
NW4514059-7	2-6-12 - 9	1
NW4514059-8	2-6-12 -21	2
NW4514059-9	2-6-12 -10	1
NW4514060-1	2-6-13 -15	1
NW4514061-1	2-6-13 -24	1
NW4514062-1	2-6-13 -25	1
NW4514063-1	2-12-27 -43	1
NW4514064-1	2-6-12 -11	1
NW4514067-1	2-6-11 -20	REF
	2-6-12 -	NP
NW4514068-1	2-6-11 -21	REF
	2-6-13 -	NP
NW4514073-1	2-12-27 -	1
NW4514073-2	2-12-27 -	1
NW4514073-3	2-12-27 -	1
NW4514073-4	2-12-27 -	1
NW4514073-5	2-12-27 -21	1
NW4514073-6	2-12-28 -10	1
NW4514076-1	2-12-27 -17	1
NW4514077-1	2-6-13 - 6	2
	2-6-13 - 5	2
NW4514084-1	2-12-27 -32	1
NW4514085-1	2-12-27 -31	1
NW4514086-1	2-12-27 -	NP
NW4514087-1	2-12-27 -36	1
NW4514088-1	2-12-27 -	NP
NW4514089-1	2-6-13 -	1

PART NUMBER	FIG AND INDEX NO	QTY /AC
	2-6-13 - 4	1
NW4514200-1	1-1 -	REF
	2-6-11 -	REF
	2-12-27 -	REF
NW4514201-1	2-12-27 -	REF
	2-12-28 -	NP
NW4514202-1	2-12-27 -	NP
NW4514203-1	2-12-27 -	NP
NW4514296-1	2-12-28 -	REF
NW4514296-3	2-12-28 -	REF
NW4514297-1	2-12-28 -	REF
NW4515001-1	2-13-4 -	NP
NW4515002-1	2-13-4 -30	1
NW4515003-1	2-12-6 -	1
NW4515004-1	2-12-6 -	REF
NW4515200-1	1-1 -	REF
	2-12-6 -	NP
	2-13-4 -	REF
NW4524000-1	2-12-3 -27	1
NW4525001-10	2-11-1 -26	1
NW4525001-10A	2-11-1 -27	1
NW4525001-2	2-11-1 - 4	1
NW4525001-20	2-11-1 -35	1
NW4525001-22	2-11-1 -36	1
NW4525001-24	2-11-1 -10	1
NW4525001-26	2-11-1 -40	1
NW4525001-26A	2-11-1 -41	1
NW4525001-28	2-11-1 -53	1
NW4525001-3	2-11-1	1
NW4525001-32	2-11-1 -56	1
NW4525001-36	2-11-1 -47	1
NW4525001-4	2-11-1 -22	1
NW4525001-4A	2-11-1 -23	1
NW4525001-5	2-11-1 -24	1
NW4525001-5A	2-11-1 -25	1
NW4525001-6	2-11-1 - 8	1
NW4525001-8	2-11-1 -28	1
NW4525001-8A	2-11-1 -29	1
NW4528024-1	2-12-23 -54	1
NW4528026-1	2-13-2 -52	1
NW4528026-2	2-13-2 -55	1
NW4528026-3	2-13-2 -58	1
NW4528026-8	2-13-3 -	1
NW4528026-9	2-13-3 -	1
NW4528034-1	2-12-7 -	1
NW4528077-1	2-14-2 -	REF
NW4528079-1	2-12-20 -97	2
NW4528080-1	2-12-2 -16	REF
	2-12-18 -	NP
	2-12-20 -	NP
NW4528080-2	2-12-2 -17	REF
	2-12-18 -	NP
	2-12-20 -	NP
NW4528083-1	2-12-15 -28	1
NW4528084-1	2-12-15 -29	1
NW4528085-1	2-12-15 -30	1
NW4528086-1	2-12-15 -32	10
NW4528086-2	2-12-15 -33	6
NW4528087-1	2-12-25 -12	1
NW4528090-1	2-12-12 -28	1
NW4528091-1	2-12-12 -29	1
NW4528092-1	2-12-6 -86	1
NW4528093-1	2-12-12 -27	1
NW4528094-1	2-12-12 -	1
NW4528107-1	2-12-3 -58	3
NW4528132-1	2-12-3 -	1
NW4528133-1	2-12-3 -19	1
NW4528134-1	2-12-3 -	1
NW4528135-1	2-12-2 - 4	REF
	2-12-3 -	NP
NW4528140-1	2-12-6 -	2
	2-12-6 -	2
NW4528142-1	2-1-7 -	NP
	2-1-8 -	REF

PART NUMBER	FIG AND INDEX NO	QTY /AC
	2-2-1 -	NP
	2-2-3 -	REF
	2-3-4 -	REF
	2-3-5 -	REF
	2-3-18 -	REF
	2-3-21 -	REF
	2-4-6 -	2
	2-4-10 -	REF
	2-6-2 -	REF
	2-6-3 -	REF
	2-6-4 -	REF
	2-6-5 -	REF
	2-6-6 -	REF
	2-6-7 -	REF
	2-7-15 -	REF
	2-7-17 -	REF
	2-9-4 -	REF
	2-12-2 - 3	REF
	2-12-3 -	REF
	2-12-18 -	REF
	2-12-25 -	REF
	2-14-1 -	NP
	2-14-2 -	REF
NW4528144-1	2-12-2 - 40	REF
NW4528148-1	2-3-3 -	NP
	2-12-2 - 1	REF
NW4528149-1	2-13-2 -	NP
NW4528152-1	2-12-6 - 57	4
	2-12-6 -114	1
NW4528152-4	2-12-6 - 58	1
NW4528153-2	2-12-14 - 41	8
	2-12-14 - 50	1
	2-12-14 - 56	4
NW4528161-1	2-12-14 - 62	1
NW4528162-1	2-12-16 -	1
NW4528170-1	2-12-3 - 54	3
NW4528193-10	2-12-6 - 91	2
NW4528193-11	2-12-6 - 92	2
NW4528193-12	2-12-6 - 93	2
NW4528193-13	2-12-6 - 94	2
NW4528193-3	2-13-2 - 41	1
NW4528193-4	2-13-2 - 32	1
NW4528193-5	2-13-2 - 30	1
NW4528193-6	2-13-4 - 44	1
NW4528193-7	2-13-4 - 45	11
	2-13-4 - 45	1
NW4528193-8	2-12-6 - 6	1
NW4528193-9	2-12-6 - 90	2
NW4528194-1	2-12-3 - 48	6
NW4528200-1	2-4-3 -	REF
	2-12-2 - 29	REF
	2-12-6 -	REF
	2-12-7 -	NP
	2-12-8 -	REF
	2-13-3 -	REF
	2-13-3 -	REF
	2-14-3 -	REF
NW4528200-10	2-12-2 - 38	REF
	2-12-25 -	NP
	2-13-2 -	REF
NW4528200-2	2-12-2 - 30	REF
	2-12-17 -	NP
	2-13-3 -	REF
	2-13-5 -	REF
	2-16-3 -	REF-
NW4528200-3	2-12-2 - 31	REF
	2-12-16 -	NP
	2-12-18 -	REF
NW4528200-4	2-12-1 - 31	REF
	2-12-2 - 32	REF
	2-12-20 -	NP
	2-12-24 -	REF
	2-14-4 -	REF
NW4528200-5	2-4-7 -	REF

PART NUMBER	FIG AND INDEX NO	QTY /AC
	2-12-2 -33	REF
	2-12-20 -	REF
	2-12-23 -	REF
	2-12-24 -	NP
NW4528200-6	2-4-7 -	REF
	2-12-2 -34	REF
	2-12-20 -	NP
	2-12-24 -	REF
	2-13-2 -	REF
	2-13-3 -	REF
	2-13-3 -	REF
	2-14-4 -	REF
NW4528200-7	2-12-2 -35	REF
	2-12-23 -	REF
	2-12-24 -	NP
	2-13-2 -	REF
NW4528200-8	2-12-2 -36	REF
	2-12-8 -	NP
	2-13-2 -	REF
	2-13-3 -	REF
	2-14-4 -	REF
NW4528200-9	2-12-2 -37	REF
	2-12-22 -	NP
NW4528201-1	1-1 -	REF
	2-12-2 -	NP
	2-13-4 -	REF
NW4528201-2	1-1 -	REF
	2-12-2 -	NP
	2-13-4 -	REF
NW4528202-1	2-12-3 -47	3
NW4528203-1	2-12-2 -41	REF
NW4528203-2	2-12-2 -	REF
NW4528205-2	2-13-2 -44	1
NW4528206-2	2-13-4 -34	1
NW4528208-1	2-12-6 - 1	1
NW4528210-1	2-12-6 -71	1
NW4528211-1	2-12-2 -43	REF
	2-12-6 -	REF
NW4528213-1	2-12-6 -	REF
	2-12-6 - 4	1
NW4528214-1	2-12-6 -	REF
	2-12-6 -	1
NW4528215-1	2-12-1 - 3	REF
	2-12-2 -28	REF
	2-12-3 - 3	REF
	2-12-6 -	REF
	2-12-6 -	NP
NW4528216-1	2-12-11 -31	1
NW4528217-1	2-12-11 -	1
	2-12-17 -	REF
NW4528218-1	2-12-2 -12	REF
	2-12-11 -	NP
NW4528219-1	2-12-2 - 2	REF
	2-12-6 -	NP
NW4528220-1	2-13-2 -22	1
NW4528220-2	2-13-4 -76	1
NW4528223-1	2-13-4 -39	1
NW4528226-1	2-13-2 -35	1
NW4528228-1	2-13-4 -43	1
NW4528230-1	2-12-2 - 5	REF
	2-12-3 -	NP
	2-12-6 -	REF
	2-12-9 -	REF
	2-13-4 -	REF
NW4528230-2	2-12-2 -	REF
	2-12-3 -	NP
	2-12-6 -	REF
	2-12-9 -	REF
	2-13-4 -	REF
NW4528231-1	2-12-2 - 7	REF
NW4528231-2	2-12-2 -	REF
NW4528235-1	2-12-3 -63	1
NW4528236-1	2-12-2 -39	REF
	2-12-13 -33	REF

PART NUMBER	FIG AND INDEX NO	QTY /AC
	2-12-15 -	NP
NW4528240-1	2-12-6 - 54	2
NW4528241-1	2-12-6 - 66	1
NW4528242-1	2-12-6 - 67	1
NW4528243-1	2-12-6 - 68	1
NW4528244-1	2-12-6 - 69	1
NW4528245-1	2-12-6 - 55	1
NW4528246-1	2-12-6 - 65	1
NW4528246-2	2-12-6 - 64	1
NW4528247-1	2-12-6 - 25	1
NW4528248-1	2-12-15 - 27	1
NW4528251-1	2-12-3 - 57	1
NW4528252-1	2-12-3 - 66	1
NW4528252-3	2-12-3 - 67	1
NW4528259	2-12-2 - 9	REF
NW4528261-1	2-12-2 - 6	REF
	2-12-9 -	NP
NW4528262-1	2-12-3 - 61	3
NW4528263-1	2-13-4 - 17	1
NW4528320	2-14-1 -	NP
NW4528320-1	2-12-17 -	1
	2-12-17 -	1
	2-13-4 -	REF
	2-13-5 -	REF
NW4528321-1	2-12-7 -	1
	2-13-3 -	
	2-13-3 -	REF
	2-13-3 -	REF
NW4528321-22	2-13-3 -	
NW4528322	2-14-1 -	NP
NW4528322-1	2-12-17 -	1
NW4528323	2-14-1 -	NP
NW4528323-1	2-12-17 -	1
NW4528324-1	2-4-3 -	REF
	2-6-7 -	REF
	2-12-3 -	1
	2-12-7 -	1
	2-12-7 -	1
	2-12-8 -	REF
	2-13-3 -	
	2-14-3 -	REF
NW4528328-8	2-14-1 -	2
NW4528400-1	2-4-7 -	REF
	2-12-8 -	REF
	2-12-20 -	1
	2-12-20 -	1
	2-12-22 -	REF
	2-12-24 -	REF
	2-14-4 -	REF
NW4528401-1	2-4-7 -	REF
	2-12-22 -	REF
	2-12-24 -	REF
NW4528402-1	2-12-25 -	1
NW4528403-1	2-12-25 -	1
	2-13-3 -	1
NW4528404-1	2-13-3 -	REF
	2-13-3 -	1
NW4528404-11	2-13-3 -	1
NW4528404-4	2-13-2 - 71	REF
	2-13-3 -	REF
	2-13-3 -	1
NW4528404-6	2-13-3 -	REF
NW4528405-1	2-12-22 -	REF
NW4528406-4	2-12-7 -124	1
NW4528406-5	2-12-7 -125	1
NW4528407-1	2-16-3 - 25	2
NW4528408-1	2-12-17 - 71	1
NW4528409-1	2-12-7 -	1
	2-13-3 -	
	2-13-3 -	1
NW4528410-1	2-12-7 -	1
	2-13-3 -	
NW4528411-1	2-14-4 -	1
NW4528411-2	2-14-4 -	1

PART NUMBER	FIG AND INDEX NO	QTY /AC
NW4528411-3	2-14-4 -	1
NW4528411-4	2-14-4 -	REF
NW4528411-5	2-14-4 -	REF
NW4528412-1	2-12-8 - 60	1
NW4528413-1	2-12-24 -	1
NW4528414-1	2-12-20 -	REF
	2-12-24 - 19	1
NW4528417-1	2-12-18 - 32	1
NW4528419-1	2-12-17 - 75	1
NW4528428-1	2-12-3 - 49	1
NW4528429	2-16-2	1
NW4528432-10	2-14-1 -	1
NW4528432-11	2-14-1 -	1
NW4528432-8	2-14-1 -	1
NW4528433-1	2-12-3 - 55	1
NW4528433-2	2-12-3 - 51	1
NW4528433-3	2-12-3 - 64	1
NW4528434-1	2-13-2 - 42	1
NW4528436-1	2-13-2 -148	1
NW4528438-1	2-13-2 -154	2
	2-13-4 - 54	1
NW4528441-1	2-13-2 -163	1
NW4528442-1	2-13-4 - 79	1
NW4528445-1	2-13-4 - 50	1
NW4528447-1	2-13-4 - 60	1
NW4528448-1	2-13-2 -164	1
NW4528451-1	2-13-2 - 45	1
NW4528453-1	2-13-2 -111	2
NW4528456-2	2-13-3 -	1
NW4528456-4	2-13-3 -	2
NW4528458-1	2-12-3 - 30	REF
	2-13-2 - 24	1
NW4528458-2	2-13-4 - 33	1
NW4528462-1	2-12-10 - 22	REF
	2-13-4 -	NP
NW4528468-1	2-3-6 -	NP
NW4528470-1	2-14-2 - 45	1
NW4528471-1	2-3-6 - 88	2
NW4528472-1	2-14-2 - 54	1
	2-14-2 - 59	1
	2-14-2 - 62	1
NW4528473-1	2-14-2 -	1
NW4529013-2	2-15-2 - 27	1
NW4529013-3	2-15-2 - 28	1
NW4529013-4	2-15-1 - 11	1
NW4529017-1	2-12-6 -115	1
NW4529017-2	2-12-6 -116	1
NW452902-1	2-12-20 - 1	1
NW4529022-1	2-12-3 - 3	1
NW4529024-1	2-12-3 -	1
NW4529030-1	2-12-3 -	1
NW4602007-1	2-3-4 - 63	1
	2-3-18 - 61	1
NW4605002	2-6-11 - 5	2
NW4605023	2-6-11 - 2	2
P101F12-0	2-3-6 - 47	12
P101F12-2	2-3-6 - 46	14
PB4395	2-3-20 -	64
PFCS3-1/2-38	2-12-14 -	2
PFSC3-1/2-38	2-12-14 - 2	4
	2-12-14 -	4
	2-12-14 - 36	7
	2-12-15 - 12	10
	2-13-4 -	4
PFSC3-1/2-8	2-12-14 - 28	4
PFSC31/2-38A	2-13-4 - 31	4
PFSC35-38A	2-13-2 - 26	4
	2-13-4 - 49	4
	2-13-6 - 25	2
PHP-24	2-12-3 -	2
PLT1M-M	2-13-6 - 49	AR
PLT2M-M	2-13-6 - 49	AR
PP200-4	2-7-17 - 17	20
PR1422G	2-12-3 -	AR

PART NUMBER	FIG AND INDEX NO	QTY /AC
PR35	2-13-6 - 27	2
PT00SE14-19P	2-7-11 - 36	1
PT06E20-41P	2-14-1 - 49	1
PT06SE14-19P	2-7-6 - 32	2
QS200-M8S	2-6-13 - 7	2
QS200M12S	2-6-9 - 4	4
QS200M140S	2-3-6 - 74	2
QS200M48S	2-3-6 - 6	1
	2-3-6 - 9	1
QS200M56S	2-5-6 - 12	2
QS200M68W	2-5-1 - 21	2
QS200M8S	2-6-9 - 12	4
R-2B (470R)	2-13-4 - 63	1
R1066-1	2-7-5 - 3	2
R196M40	2-7-5 - 4	4
R310M20	2-3-15 - 1	1
R422M22-1	2-1-8 - 71	REF
	2-7-1 - 13	REF
R422M22-3	2-7-9 - 22	1
R422M25-1	2-2-3 - 52	REF
	2-7-1 - 22	REF
	2-7-18 - 1	1
R4G	2-1-4 -	36
	2-3-4 -	2
	2-3-4 -	2
	2-3-4 -	32
	2-3-4 -	22
	2-3-4 -	17
	2-3-4 -	17
	2-3-9 -	6
	2-3-18 -	19
	2-3-18 -	17
	2-3-18 -	29
	2-3-18 -	20
	2-3-18 -	16
	2-3-20 -	6
	2-12-16 -	4
	2-14-2 -	4
R5069/ARN508	2-13-2 - 5	1
R5164M1	2-16-4 - 39	2
R532M30-11	2-7-5 - 2	2
R532M30-21	2-7-5 - 1	2
R819-2	2-7-1 - 2	REF
	2-7-5 -	2
RCAFL85	2-16-3 - 39	2
REO12A004-059-6	2-1-3 -	2
RER70F15R8R	2-13-4 - 59	2
RER75F250R	2-12-25 - 50	1
RF4-4	2-7-10 - 32	4
RH-25-20R	2-13-4 - 61	2
RL07S113J	2-12-14 -	1
RM52LHA4972-6-02	2-12-11 -	1
	2-16-1 -	4
RM52LHA4972-6-82	2-12-13 - 34	4
	2-12-17 -	4
RM52LHA4972-8-02	2-12-12 -	8
	2-16-1 -	4
RN55D1000F	2-13-2 -137	3
RN55D1002F	2-13-2 -106	2
RN55D1003F	2-13-2 -121	1
RN55D1103F	2-13-2 -109	4
RN55D1104F	2-13-2 - 88	3
RN55D1542F	2-13-2 -130	1
RN55D1782F	2-13-2 -117	1
RN55D2001F	2-13-2 -123	2
RN55D2212F	2-13-4 - 66	1
RN55D3003F	2-13-2 -103	1
RN55D3481F	2-13-2 -135	1
RN55D4751F	2-13-2 -139	2
RN55D4992F	2-13-2 -133	3
	2-13-4 - 52	1

PART NUMBER	FIG AND INDEX NO	QTY /AC
RN55D5102F	2-13-2 -138	1
RN55D6041F	2-13-2 -120	1
RN55D7151F	2-13-2 - 92	1
RN55D8202F	2-13-2 -129	2
RN55D9091F	2-13-2 - 94	1
RN60D1000F	2-13-2 -150	2
RN60D1001F	2-13-2 -116	14
	2-13-2 -149	2
RN60D1100F	2-13-2 -152	1
RN60D1210F	2-13-4 - 69	1
RN60D1651F	2-13-2 -162	1
RN60D2210F	2-13-4 - 67	1
RN60D2211F	2-13-2 -153	1
RN60D3900F	2-13-2 - 91	1
RN60D4750F	2-13-4 - 68	2
RN60D5600F	2-13-2 -161	1
RN60D6810F	2-13-2 -151	1
RR12060B	2-6-1 - 20	REF
	2-12-8 - 66	REF
RR12060R	2-6-5 - 5	1
RR75C	2-7-11 -	1
RS-2B-270 ohm	2-13-2 -104	1
RS-2B-4 ohm	2-13-2 -136	1
RS-5B (350R)	2-13-4 - 75	1
RS-5B (400R)	2-13-4 - 71	1
RS2A-500-1W	2-12-3 - 11	1
RSN116140	2-13-2 -	1
	2-13-2 -	3
RSN1165140	2-13-2 -145	4
RT-5048/ ARC-511(V)	2-13-2 - 17	1
RT-5078/ ARC-164(V)	2-13-2 - 19	1
RT5036/ARN504V	2-13-2 - 3	1
RT862A/APX77	2-13-2 - 7	1
RW30G160	2-12-10 - 9	2
RW33G400	2-12-10 - 10	1
RW69G711	2-12-14 -	1
S-1426-6	2-12-29 -	3
S0-1000	2-12-27 -	2
S0-1019-7125	2-12-27 -	2
S0-1024-7121	2-14-6 -	1
S0-1048-8308	2-12-6 -	1
	2-12-12 -	1
	2-12-17 - 59	1
S0-1048-8977	2-12-13 - 21	1
S0-1066-001	2-13-6 - 14	1
	2-14-6 -	2
S01055-8690	2-12-6 -	1
	2-12-11 -	2
S101F12-08	2-3-6 -	26
S1043	2-1-1 - 11	2
	2-1-3 - 68	1
	2-1-7 - 17	2
	2-1-8 - 26	2
	2-2-2 - 26	2
	2-3-20 - 80	1
S1043M	2-2-3 - 39	2
	2-3-10 -103	1
	2-8-6 - 32	1
	2-8-8 -	1
S1125	2-3-8 - 35	1
S1191	2-1-7 - 9	9
S1192-2-7	2-8-8 - 5	1
S1207-18	2-9-6 -	AR
S1214-180	2-9-6 -	AR
	2-9-6 -	AR
	2-9-6 -	AR
	2-9-6 -	AR
S1222-6-049-1032	2-4-11 - 25	2
S1224-3-16	2-7-9 - 3	4
S1225-5-80	2-7-4 - 27	1
S1225-6-80	2-7-4 - 28	1
S1225C6-65	2-5-3 - 16	4

PART NUMBER	FIG AND INDEX NO	QTY /AC
S1228-5	2-6-5 -	1
	2-6-5 -18	1
S1228-8	2-6-2 -	15
S1228A	2-6-7 - 6	1
S1236-10	2-10-1 -15	80
	2-14-4 -	AR
S1236-10L	2-7-14 -	AR
	2-14-4 -	AR
S1236-1216	2-7-9 -16	AR
S1236-416	2-1-7 -	AR
	2-1-7 -	AR
	2-5-6 - 7	AR
S1236-416L	2-1-7 -	AR
	2-1-7 -	AR
	2-4-10 -	AR
S1236-516	2-3-21 -	18
	2-7-14 -	AR
S1236-516L	2-3-21 -15	4
S1242-6A	2-5-2 -	4
S1242-7	2-4-4 -	4
S1242AB13-19-16	2-3-2 -	1
S1242AB13-19-32	2-3-2 -	AR
S1244B11-41	2-7-6 -	2
S1244B12-42	2-12-25 -	1
S1244B18-4	2-12-25 -	1
S1244B19-30	2-7-6 -40	1
S1244B9-5-1/4	2-7-11 -	1
S1244E	2-1-8 -	REF
S1244F9-3	2-7-12 -	1
S1246-11-15-63	2-12-10 -	4
S1246-16-24-150	2-3-14 - 3	1
S1246-16-24-63	2-9-8 -	2
S1246-32-32-63	2-6-10 -50	AR
S1246-32-52-032	2-7-11 -25	1
S1246-66-45-32	2-1-2 -	2
S1246-74-49-32	2-1-2 -	2
S1246-90-59-32	2-1-2 -	2
S1246AB13-12-16	2-2-4 -	33
S1246AB15-16-20	2-3-5 -	24
S1246AB15-16-63	2-3-5 -	2
S1246AB16-22-20	2-5-3 -51	2
S1246AB16-22-40	2-5-3 -51	2
S1246AB16-22-50	2-5-3 -51	2
S1246AB16-22-63	2-5-3 -51	4
S1246AB64-42-60	2-4-8 -	2
S1246AB68-42-16	2-8-6 -	1
S1246B16-18-125	2-1-9 - 8	AR
S1246F10-24-31	2-14-4 -	3
S1246K41-38-40	2-9-7 -	2
S1246LC25-20-20	2-2-1 -10	3
S1246LS12-12-063	2-7-13 -	AR
S1246LS17-16-32	2-3-2 -37	AR
S1246LS17-19-062	2-3-17 - 5	AR
S1246LS32-26-110	2-7-2 - 7	2
S1246LS7-8-062	2-3-9 -	4
S1246P13-14-40	2-16-1 -	4
S1246P13-20-187	2-16-1 -	1
S1246T12-26-32	2-1-6 -	22
S1246T16-24-63	2-9-8 -	2
S1246T20-14-15	2-6-10 -	4
S1256C632-7A	2-4-11 -	2
S1256CN1032-14	2-3-20 - 4	3
S1267-9-1196	2-3-4 -56	1
S1267-9-1790	2-1-9 -15	2
S1267-9-320	2-3-18 -15	2
	2-3-18 -37	2
S1267-9-400	2-3-9 -62	1
S1267-9-440	2-3-8 -	1
S1267-9-444	2-3-8 -34	1
S1267-9-4775	2-1-6 -14	12
S1267-9-500	2-3-8 - 5	1

PART NUMBER	FIG AND INDEX NO	QTY /AC
S1267-9-550	2-3-18 - 8	1
S1267-9-670	2-3-18 -29	1
S1267-9-690	2-3-18 -30	1
S1267-9-850	2-3-3 -23	2
S1267-9-968	2-3-4 -48	1
S1267-9-980	2-3-4 -47	1
S1267-9-995	2-3-4 -55	1
S1267-9W1290	2-2-4 -48	4
S1277C4-10	2-3-15 -13	2
S1282A3	2-12-23 - 3	4
S1286-12-12	2-9-5 -51	4
S1286-12-65	2-9-5 -45	2
S1286-14-12	2-9-5 -11	2
	2-9-5 -18	2
S1286-20-12	2-9-7 -22	2
S1286-5-10	2-10-1 - 4	2
S1286-6-10	2-10-1 -16	2
S1289D6-4	2-8-3 -18	1
S1296	2-6-2 -	6
	2-9-2 -11	AR
	2-9-4 -32	AR
	2-9-5 -	AR
	2-9-6 -	AR
	2-9-7 -	AR
	2-9-7 -	AR
S1313-4	2-8-12 -	2
S1324-3-13	2-7-9 -13	2
S1324-3-20	2-7-6 -	2
S1324-4-22	2-7-14 -	8
S1331A7	2-14-2 - 2	3
S1331E5	2-12-15 -14	2
S1349	2-16-1 -39	1
S1371-3-5C	2-11-1 -50	2
S1384-4A4	2-9-8 -23	6
S1389	2-9-5 -42	1
S1413	2-12-5 - 9	2
S1414-1	2-12-5 -10	4
S1415	2-12-5 -11	2
S1416	2-12-5 - 8	2
S1417-2	2-12-5 - 2	4
S1419-1	2-4-7 -25	2
S1420	2-12-5 -	2
S1422-6	2-8-4 -	9
	2-8-15 -29	1
S1422-8	2-8-4 -	1
	2-8-10 -90	2
	2-8-15 -27	1
S1426-6	2-7-12 -	4
	2-12-11 -	7
	2-12-14 -	4
	2-12-14 -	3
	2-12-14 -	3
	2-12-14 -	2
	2-13-4 -	2
	2-14-1 -	4
	2-14-1 -	2
	2-14-2 -	4
	2-14-2 -	2
	2-14-2 -	4
S1427	2-3-8 -33	1
S1439-1032-14	2-3-10 -23	1
	2-3-10 -27	1
	2-3-10 -33	1
S1440	2-3-2 -30	1
	2-3-8 -	1
	2-3-18 - 9	2
	2-16-1 -47	2
S1442-1	2-5-1 -	1
S1445	2-13-4 -	2
S1451-24	2-11-1 -77	2
	2-16-3 -33	REF
S1453	2-11-1 -78	1
	2-16-3 -	2
S1458	2-3-10 -97	2

PART NUMBER	FIG AND INDEX NO	QTY /AC
S21908-0900	2-5-5 - 28	1
S30641-012	2-4-7 - 17	12
S4506	2-3-6 - 72	AR
S4901-01416	2-12-15 - 4	2
S4905	2-1-6 - 6	2
S4905-020	2-8-14 - 6	4
S8171AD22	2-9-7 - 26	1
SCB83314-2	2-12-5 -	4
SE38	2-16-1 -	6
SEAL	2-6-5 -	1
SFR25HJ-1M2	2-13-2 -128	2
SHC-P51	2-13-2 - 80	1
SJT502504	2-12-3 - 28	1
SJT503504	2-12-18 - 20	1
	2-12-23 -	1
	2-12-23 - 47	1
	2-12-23 - 60	1
	2-12-25 -	1
SJT504504	2-12-3 -	1
	2-12-12 -	1
	2-12-23 - 34	1
	2-12-23 - 52	1
SJT505504	2-12-9 - 53	1
	2-14-2 - 68	1
SJT507504	2-12-11 -	1
	2-12-13 - 28	2
	2-14-2 - 67	1
SJT508504	2-12-3 - 34	2
SJT510504	2-12-6	1-
SJT513504	2-12-9 - 46	2
SK2591	2-5-4 - 17	1
SL100-08	2-12-11 -	1
	2-16-1 -	6
SL19381-4-14	2-5-3 -	
SL200-4-411	2-12-13 -	2
SL201-4AA11	2-12-11 -	24
	2-12-12 -	39
SL201-5AA11	2-12-12 -	26
	2-16-1 -	10
	2-16-1 -	21
SL201-6AA	2-12-3 -	2
SL88-632-38-09	2-12-14 -	2
SM5-7C	2-7-14 - 18	2
SO-1022-7129	2-14-6 -	2
SP00W10-6P(003)	2-12-17 - 66	1
SPB16-8PS(003)	2-12-17 - 84	1
SPB16-8PS003	2-12-1 - 16	REF
SPB2-41PS	2-12-3 - 77	1
SPB20-16PS(003)	2-12-17 - 80	1
SPB20-16PS003	2-12-1 - 15	REF
SPB20-16PSW	2-12-1 - 9	REF
	2-12-3 - 71	1
	2-12-9 - 39	1
SPB20-39PS	2-12-3 - 80	1
	2-12-9 - 32	1
SPB20-39PS(003)	2-12-17 - 65	1
	2-12-17 - 81	1
SPB20-41PS	2-12-9 - 35	1
SPB22-21PS(003)	2-12-17 - 64	1
	2-12-17 - 79	1
SPB22-21PS003	2-12-1 - 14	REF
SPB22-41PS	2-12-3 - 79	1
	2-12-9 - 33	1
SPB22-41PSW	2-12-3 - 70	1
	2-12-9 - 31	1
SPB24-61PS	2-12-3 - 78	1
	2-12-9 - 34	1
SPB24-61PSW	2-12-3 - 75	1
	2-12-9 - 36	1
SPDG7400	2-12-8 - 67	REF
SPH4-10C1	2-7-3 - 2	10
	2-7-8 - 22	8
SPH4-10C7	2-7-16 - 24	2
SPH410C-1	2-7-3 - 32	1

PART NUMBER	FIG AND INDEX NO	QTY /AC
SS48152K2215	2-14-1 -44	1
SS51071	2-14-2 -17	1
ST106N	2-8-1 - 3	REF
	2-8-3 -37	REF
	2-12-1 - 8	REF
	2-12-3 -45	REF
	2-14-3 - 1	1
ST4AR	2-7-2 -11	1
	2-7-3 - 3	1
	2-7-3 - 6	1
	2-7-3 - 9	1
	2-7-3 -12	1
	2-7-3 -15	1
	2-7-3 -18	1
	2-7-3 -21	1
	2-7-3 -24	1
	2-7-3 -27	1
	2-7-5 -51	1
	2-7-5 -56	1
	2-7-8 -30	2
	2-7-16 -40	1
	2-7-17 - 5	1
	2-7-17 -12	1
ST4BR	2-7-8 -34	4
ST4BR3	2-7-6 -29	1
ST53A	2-14-3 - 1	1
SX560	2-12-13 -	3
T50F	2-13-3 -	AR
TDH-6050-3001	2-12-6 -77	1
TDH6050-1502	2-12-11 -35	2
TDH8050-1602P	2-12-6 -78	1
TDH8070-2502	2-12-12 -32	1
	2-12-13 -22	1
TO BE CON-FIRMED	2-13-5	1-
TS1843B/APX	2-13-2 - 8	1
TYPETLU146A	2-3-10 -93	2
UG-1213/U	2-13-2 -72	1
UG-59B/U	2-13-3 -15	1
UG212C/U	2-13-3 -16	1
UG88D/U	2-13-2 -76	1
VP1073-4-14	2-5-3 -17	4
VR-1010-24-2A	2-12-3 -16	1
W805824-5	2-16-4 -12	2
W805829-5	2-16-4 -	2
W805829-7	2-16-4 -	2
W805829-802	2-16-3 - 1	REF
	2-16-4 -	2
W805829-9	2-16-4 -	AR
W805832	2-16-3 -10	REF
W805832-814	2-16-4 -	2
	2-16-5 - 1	REF
W805835-205	2-16-4 -40	2
W805835-5	2-16-4 -44	2
W805835-6	2-16-4 -	2
W805835-7	2-16-4 -50	4
W805835-810	2-16-4 -	2
W805835-9	2-16-4 -51	4
W805836-806	2-16-4 -	REF
W805838-810	2-16-4 -	2
W805839-201	2-16-4 - 1	2
W805839-401	2-16-4 -	2
W805842-3	2-16-4 -16	2
W805843-804	2-16-4 -	REF
W805859-4	2-16-4 - 7	2
W805861-3	2-16-4 - 2	2
W805861-5	2-16-4 -15	2
W805865-201	2-16-4 -65	2
W805865-401	2-16-4 -	2
W805878-3	2-16-4 -48	2
W805882-3	2-16-4 -63	16
W805884-3	2-16-4 -62	16
W805888-3	2-16-4 - 3	2
W805893-3	2-16-4 -23	2
W805915-3	2-16-4 -43	2
W805947-401	2-16-4 -41	2
W805947-402	2-16-4 -42	2
W805950-3	2-16-4 -68	2
W805950-4	2-16-4 -67	2
W805974-3	2-16-4 -61	2
W809058-3	2-16-4 -29	2
W809058-4	2-16-4 -	2
W809059-3	2-16-4 -26	2
W809060-3	2-16-4 -25	2
W809061-401	2-16-4 -33	2
W809062-3	2-16-4 -34	2
W809063-3	2-16-4 -57	2
W809064-3	2-16-4 -56	2
W809065-401	2-16-4 -	2
W809069-3	2-16-4 -49	2
W809072-401	2-16-4 -21	2
W809073-800	2-16-4 -	2
W809075-5	2-16-4 -18	2
W809076-3	2-16-4 -28	2
W809077-3	2-16-4 - 9	2
W809078-3	2-16-4 -59	2
W809079-3	2-16-4 -38	4
W809081-800	2-16-3 -20	2
W809084-3	2-16-3 -13	2
X21 (.0980 ID)	3-5 -	1
X21 (1/16 ID)	3-5 -	1
X21 (3/32 ID)	3-5 -	1
X22 (3/16 ID)	3-5 -	1
X611A	3-7 -28	1
XB10224K1105	2-16-2 -	8
	2-16-2 -12	40
	2-16-2 -	9
XX10129-A8-002	2-12-15 - 9	11
XX10129A8-002	2-16-2 -	9
XX10129A8-777	2-16-2 -	8
	2-16-2 -11	40
XX10376K1105	2-16-2 -24	42
XX16205K1105	2-3-9 -51	8
XX16362-0808K110	2-3-9 -54	8
XX51362	2-4-10 - 9	8
Y-D4N	2-13-6 -13	1
	2-14-6 - 5	2
Z1200-048	2-5-3 -10	2
Z2291W	2-14-1 -19	1

PART 6

STANDARD EQUIVALENT HARDWARE

TABLE OF CONTENTS

Title **Page**

Standard Equivalent Hardware Chart 6-2

STANDARD EQUIVALENT HARDWARE				
SOURCE CONTROL OR PART NO.	SUPERSEDED BY OR ALTERNATE	2ND ALTERNATIVE	3RD ALTERNATIVE	4TH ALTERNATIVE
AN206DSP4	MS27643-4			
AN380-2-4	MS24665-136			
AN380-3-3	MS24665-283			
AN385-1-12	MS24692-187			
AN507-832R7	MS24693-S49			
AN960C616	NAS1149C0663R			
NAS1003-6A	NAS1003-6H			
NAS1103-9D	NAS6203-9D			
NAS1105-49	NAS6205-50			
NAS1106-24	NAS6206-24			
NAS1106-28	NAS6206-28			
NAS1593-111	M83248/1-111			
NAS560CK3P8	MS24694C57			
NAS560CK3P10	MS34694C59			
NAS623-4-5	NAS6204-5			
MS20206-DSP5	MS27643-5			
MS21919WH6	MS21919WCJ6			
MS28775-130	M83461/1-130			
MS9048-036	MS171464			
S1246-66-45-32	B0202013S66-45-32			
S1422-6	MS28778-6			
S1422-8	MS28778-8			