National Defence | Défense nationale

C-12-114-000/MY-000

PARTS LIST

CT114 TUTOR

(ENGLISH)

Issued on Authority of the Chief of the Defence Staff
Publiée avec l'autorisation du Chef d'état-major de la Défense

OPI: DAEPM (FT) 6

1977-09-07
Ch 37 1999-03-29

Canada

LIST OF EFFECTIVE PAGES

Insert latest changed pages; dispose of superseded pages in accordance with applicable orders.

NOTES

1. A page that has been changed two or more times is indicated in the List of Effective Pages by the most recent change.

2. The portion of the text affected by the latest change is indicated by a black vertical line or the letter R in the margin of the page. Changes to illustrations are indicated by miniature pointing hands or black vertical lines.

Dates of issue for original and changed pages are:

Original	0	1977-09-07	Ch	19	1989-02-22
Ch	1	1977-10-25	Ch	20	1990-11-12
Ch	2	1978-03-01	Ch	21	1991-01-24
Ch	3	1979-03-15	Ch	22	1991-12-06
Ch	4	1981-03-18	Ch	23	1992-01-31
Ch	5	1981-11-23	Ch	24	1992-03-25
Ch	6	1982-09-22	Ch	25	1992-07-15
Ch	7	1983-09-08	Ch	26	1993-10-01
Ch	8	1984-05-29	Ch	27	1994-04-11
Ch	9	1985-01-16	Ch	28	1995-01-09
Ch	10	1986-09-04	Ch	29	1995-06-05
Ch	11	1987-02-12	Ch	30	1995-10-09
Ch	12	1987-09-14	Ch	31	1996-06-10
Ch	13	1988-09-06	Ch	32	1997-02-20
Ch	14	1988-11-02	Ch	33	1997-10-20
Ch	15	1989-03-20	Ch	34	1998-02-19
Ch	16	1989-06-16	Ch	35	1998-04-30
Ch	17	1989-06-17	Ch	36	1998-11-09
Ch	18	1990-02-21	Ch	37	1999-03-29

Total number of pages in this order is 706 consisting of the following:

Page No.	Change No.
Title	37
A	37
B	37
C	37
D	37
E	37
F	37
G	37
i	0
ii	0
iii	2
iv	30
v	28
vi	32
vii/viii	32
ix	10
x	10
xi/xii	36
PART 1	
1	0
2	0
3	32
4	0
5	0
6	2

LIST OF EFFECTIVE PAGES (Cont)

Page No.	Change No.
7	0
8	31
9	31
10	31
11	31
12	31
13	31
14	31
15	35
16	35
16A	35
16B	35
16C	35
16D	35
17	0
18	0
19	0
20	0
21	0
22	0
23/24	3
PART 2	
1-01	0
1-02	1
1-03	31
1-04	0
1-05	36
1-06	0
1-07	5
1-08	36
1-09	36
1-10	0
1-11	32
1-12	36
1-13	31
1-14	4
1-15	4
1-16	0
1-17	31
1-18	33
1-19 (Blank)/1-20	34
1-21	36
1-22	32
1-23	36
1-24	31
1-25	32
1-26	0
1-27/1-28	32
2-01	0
2-02	0
2-03	36
2-04	32
2-04A	33
2-04B	33
2-05 (Blank)/2-06	32
2-07	31
2-08	36
2-09 (Blank)/2-10	32
2-11	32
2-12	32
3-01	2
3-02	0
3-03	0
3-04	2
3-05	36
3-06	31
3-07 (Blank)/3-08	32
3-09	31
3-10	32
3-11 (Blank)/3-12	32
3-13	31
3-14	33
3-15	32
3-16	2
3-17	2
3-18	2
3-18A	32
3-18B	2
3-19 (Blank)/3-20	0
3-21	35
3-22	7
3-23	36
3-24	31
3-25	7
3-26	36
3-27	31
3-28	36
3-29	36
3-30	36
3-31 (Blank)/3-32	10
3-33	31
3-34	36
3-35	29
3-36	0
3-37	31
3-38	32
3-39	33
3-40	5
3-41	36
3-42	36
3-43	36
3-44	0
3-45	36

LIST OF EFFECTIVE PAGES (Cont)

Page No.	Change No.
3-46	34
3-47	36
3-48	6
3-48A	36
3-48B	31
3-49 (Blank)/3-50	0
3-51	36
3-52	21
3-53	31
3-54	0
3-55 (Blank)/3-56	28
3-57	36
3-58	31
3-59 (Blank)/3-60	29
3-61	36
3-62	32
3-63 (Blank)/3-64	32
3-65	31
3-66	32
3-67 (Blank)/3-68	0
3-69	31
3-70	0
3-71	33
3-72	31
3-73	31
3-74	26
3-75	33
3-76	0
4-01	0
4-02	0
4-03	27
4-04	0
4-05	36
4-06	29
4-07 (Blank)/4-08	0
4-09	32
4-10	31
4-11 (Blank)/4-12	0
4-13	32
4-14	0
4-15	36
4-16	0
4-17	36
4-18	12
4-19	35
4-20	32
4-21	29
4-22	0
4-23	32
4-24	17
4-25 (Blank)/4-26	0
4-27	32
4-28	36
4-29 (Blank)/4-30	11
4-31	36
4-32	24
4-33	32
4-34	31
5-01	30
5-02	30
5-03	36
5-04	30
5-05 (Blank)/5-06	30
5-07	36
5-08	30
5-09	30
5-10	30
5-11	30
5-12	30
5-13	30
5-14	30
5-15 (Blank)/5-16	35
5-17	36
5-18	34
5-19 (Blank)/5-20	30
5-21	32
5-22	30
5-23 (Blank)/5-24	0
5-25	32
5-26	0
5-27/5-28	33
6-01	2
6-02	2
6-03	31
6-04	2
6-05	36
6-06	32
6-07 (Blank)/6-08	27
6-09	31
6-10	32
6-11 (Blank)/6-12	2
6-13	32
6-14	32
6-15 (Blank)/6-16	30
6-17	36
6-18	36
6-19 (Blank)/6-20	0
6-21	32
6-22	32
6-23	32
6-24	29
6-25	32

LIST OF EFFECTIVE PAGES (Cont)

Page No.	Change No.
6-26	32
6-27 (Blank)/6-28	2
6-29	31
6-30	2
6-31	31
6-32	26
6-33	33
6-34	31
7-01	0
7-02	0
7-03	36
7-04	36
7-05	36
7-06	31
7-07 (Blank)/7-08	0
7-09	31
7-10	36
7-11 (Blank)/7-12	0
7-13	36
7-14	36
7-15 (Blank)/7-16	0
7-17	36
7-18	36
7-19 (Blank)/7-20	0
7-21	36
7-22	36
7-23 (Blank)/7-24	0
7-25	36
7-26	0
7-27	32
7-28	36
7-29	1
7-30	0
7-31	32
7-32	0
7-33 (Blank)/7-34	0
7-35	31
7-36	0
7-37	36
7-38	17
7-39	36
7-40	32
7-41 (Blank)/7-42	3
7-43	32
7-44	0
7-45	36
7-46	36
7-47 (Blank)/7-48	0
7-49	33
7-50	0
7-51	31
7-52	33
7-53 (Blank)/7-54	0
7-55	36
7-56	36
7-57 (Blank)/7-58	30
7-59	36
7-60	36
7-61 (Blank)/7-62	0
7-63/7-64	37
8-01	28
8-02	0
8-03	30
8-04	0
8-05	0
8-06	0
8-07	31
8-08	30
8-09 (Blank)/8-10	26
8-11	31
8-12	31
8-13	31
8-14	0
8-15	36
8-16	36
8-17	34
8-18	36
8-19 (Blank)/8-20	0
8-21	31
8-22	20
8-23	34
8-24	32
8-25 (Blank)/8-26	23
8-27	32
8-28	31
8-29 (Blank)/8-30	28
8-30A	32
8-30B	28
8-31	32
8-32	32
8-33	28
8-34	0
8-35	33
8-36	32
8-37 (Blank)/8-38	32
8-39	33
8-40	31
8-41	33
8-42	31
8-43 (Blank)/8-44	1
8-45	36
8-46	0
8-47/8-48	31

LIST OF EFFECTIVE PAGES (Cont)

Page No.	Change No.
9-01	0
9-02	0
9-03	29
9-04	0
9-05	31
9-06	0
9-07	32
9-08	10
9-08A	37
9-08B	32
9-09 (Blank)/9-10	5
9-11	36
9-12	36
9-13 (Blank)/9-14	11
9-15	32
9-16	11
9-17 (Blank)/9-18	2
9-19	32
9-20	33
9-21 (Blank)/9-22	0
9-23/9-24	33
10-01	2
10-02	0
10-03	32
10-04	29
10-05/10-06	32
11-01	0
11-02	31
11-03	37
11-04	32
11-05/11-06	32
12-01	32
12-02	0
12-03	33
12-04	31
12-05 (Blank)/12-06	36
12-06A	36
12-06B	30
12-07	36
12-08	31
12-09 (Blank)/12-10	5
12-11	37
12-12	32
12-12A (Blank)/12-12B	32

LIST OF EFFECTIVE PAGES (Cont)

Page No.	Change No.
12-13	32
12-14	32
12-15	32
12-16	13
12-17	32
12-18	0
12-19	32
12-20	32
12-21 (Blank)/12-22	0
12-23	32
12-24	32
12-25 (Blank)/12-26	30
12-27	32
12-28	32
12-29	32
12-30	14
12-31	32
12-32	32
12-33 (Blank)/12-34	2
12-35	32
12-36	32
12-37	32
12-38	34
12-39	35
12-40	36
12-41 (Blank)/12-42	31
12-43	32
12-44	32
12-45	32
12-46	32
12-47	32
12-48	32
12-49 (Blank)/12-50	30
12-50A	32
12-50B	32
12-51	32
12-52	0
12-53	37
12-54	36
12-55 (Blank)/12-56	0
12-57	32
12-58	32
12-59/12-60	32
12-61 (Blank)/12-62	0
12-63	0
12-64	32
12-65	32
12-66	32
12-67	32
12-68	32

LIST OF EFFECTIVE PAGES (Cont)

Page No.	Change No.
12-69	32
12-70	0
12-71 (Blank)/12-72	0
12-73	32
12-74	0
12-75	32
12-76	2
12-77	32
12-78	0
12-79	32
12-80	32
12-81 (Blank)/12-82	12
12-83	32
12-84	36
12-85 (Blank)/12-86	25
12-87	32
12-88	32
12-89 (Blank)/12-90	17
12-91	36
12-92	32
12-93/12-94	32
13-01	32
13-02	26
13-03	31
13-04	32
13-04A	32
13-04B	33
13-04C	33
13-04D	30
13-04E	31
13-04F	36
13-05 (Blank)/13-06	30
13-07	32
13-08	32
13-09 (Blank)/13-10	32
13-11	32
13-12	32
13-13	32
13-14	32
13-15	32
13-16	32
13-17	36
13-18	32
13-19	32
13-20	0
13-21	32
13-22	24
13-23	37
13-24	32
13-25	32
13-26	32
13-27	32
13-28	32
13-29	32
13-30	32
13-31/13-32	32
14-01	32
14-02	32
14-02A (Blank)/14-02B	32
14-03	32
14-04	32
14-05	32
14-06	32
14-07	32
14-08	32
14-09	36
14-10	34
14-11	32
14-12	0
14-13	36
14-14	0
14-15	36
14-16	32
15-01	0
15-02	1
15-03	32
15-04	37
15-05 (Blank)/15-06	0
15-07/15-08	32
16-01	0
16-02	32
16-03	32
16-04	32
16-05 (Blank)/16-06	5
16-07	32
16-08	32
16-09	36
16-10	32
16-11	32
16-12	0
16-13	0
16-14	32
16-15	32
16-16	0
16-17	32
16-18	32
16-19 (Blank)/16-20	0
16-21	0
16-22	32

LIST OF EFFECTIVE PAGES (Cont)

Page No.	Change No.
17-01	0
17-02	31
17-03	31
17-04	31
17-05/17-06	31

PART 3

Page No.	Change No.
1	30
2	0
3	31
4	30
5	30
6	30
7	32
8	32
9 (Blank)/10	0
11	0
12	31
13 (Blank)/14	0
15	32
16	0
17	31
18	0
19 (Blank)/20	30
21	32
22	0
23 (Blank)/24	0
25	32
26	0
27/28	32

PART 4

Page No.	Change No.
1	0
2	0
3	0
4	0
5	0
6	0
7	37
8	0
9	26
10	0
11	0
12	26
13	27
14	26
15	26
16	26
17	26
18	26
19	0
20	0
21	0
22	0
23/24	30

PART 5

Page No.	Change No.
1/2	37
3	37
4	37
5	37
6	37
7	37
8	37
9	37
10	37
11	37
12	37
13	37
14	37
15	37
16	37
17	37
18	37
19	37
20	37
21	37
22	37
23	37
24	37
25	37
26	37
27	37
28	37
29	37
30	37
31	37
32	37
33	37
34	37
35	37
36	37
37	37
38	37
39	37
40	37
41	37
42	37

Contact Officer: DAEPM (FT) 6-2
©1977 DND/MDN Canada

TABLE OF CONTENTS

PART	TITLE	PAGE
1	INTRODUCTION	1
2	GROUP ASSEMBLY PART LIST	1
3	SPECIAL SERVICE TOOL LIST	1
4	BULK MATERIAL CHART	1
5	NUMERICAL PART LIST	1

CT114 TUTOR

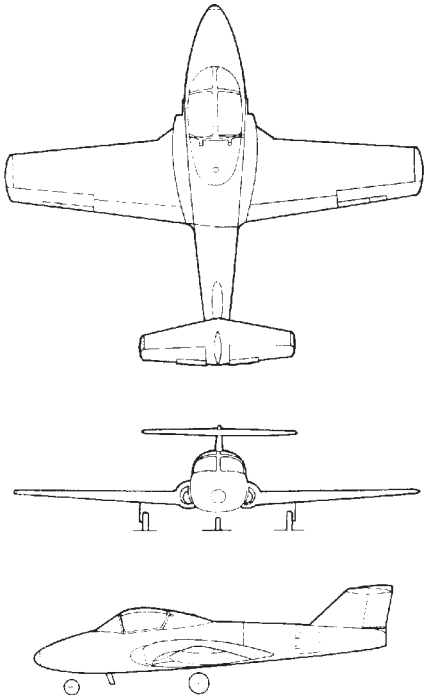

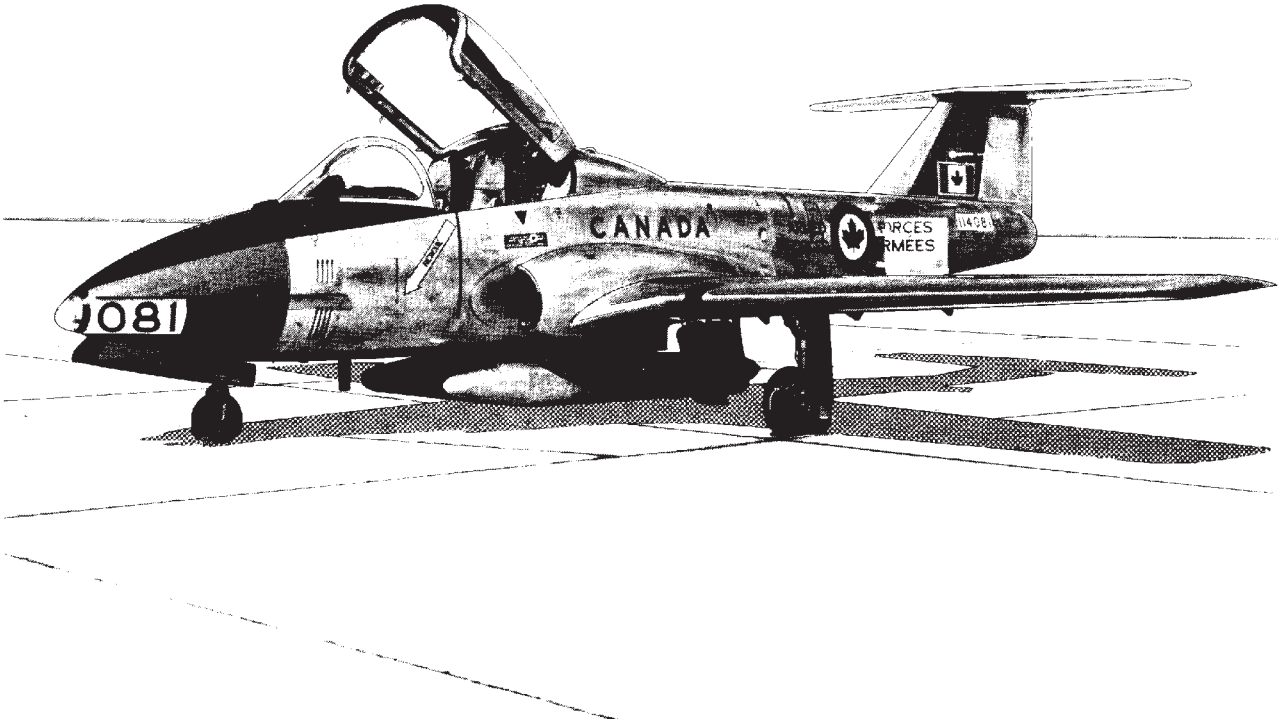

LIST OF ILLUSTRATIONS

FIGURE	TITLE	PAGE
	PART 2	
1	TUTOR AIRCRAFT GENERAL ASSEMBLY	22
	SECTION 1 - WING	
2	COMPLETE WING	1-02
3	COMPLETE WING BOX	1-04
4	WING BOX STRUCTURE	1-06
5	WING SKIN PANELS & FLAP SHROUD	1-10
6	AILERON SHROUD	1-14
7	DROOP SNOOT FAIRING, WING LEADING EDGE & TIP	1-16
8	WING COMPLETE FLAP	1-20
9	WING COMPLETE AILERON	1-22
10	AILERON SPRING, TRIM & GEARED TABS	1-26
	SECTION 2 - EMPENNAGE	
11	COMPLETE EMPENNAGE	2-02
12	VERTICAL STABILIZER & RUDDER	2-04
13	HORIZONTAL STABILIZER & ELEVATOR	2-06
14	ELEVATOR BALANCE WEIGHTS, TABS & EMPENNAGE FAIRINGS	2-10
	SECTION 3 - FUSELAGE	
15	COMPLETE FORWARD FUSELAGE	3-02
16	FORWARD FUSELAGE STRUCTURE	3-04
17	NOSE FUSELAGE STRUCTURE	3-08
18	NOSE FUSELAGE DOORS	3-12
19 (1 OF 2)	CENTRE FUSELAGE & ENGINE MOUNTINGS	3-16
19 (2 OF 2)	CENTRE FUSELAGE & ENGINE MOUNTINGS	3-18
20 (1 OF 2)	CENTRE FUSELAGE	3-20
20 (2 OF 2)	CENTRE FUSELAGE	3-22
21 (1 OF 2)	COCKPIT STRUCTURE & FLOOR	3-26
21 (2 OF 2)	COCKPIT STRUCTURE & FLOOR	3-28
22	COCKPIT DOORS, STEP & WINDSHIELD	3-32
23	FUSELAGE TO WING FAIRINGS	3-36
24	CANOPY & FAIRING	3-40
25	CANOPY OPERATING & JETTISON MECHANISM	3-44
26	CANOPY HINGE MECHANISM	3-46
27	CANOPY OPERATING LINKAGE	3-48
28	CANOPY LOCK	3-50
29	CANOPY MANUAL OPERATING CRANK & FLEXIBLE DRIVE	3-52
30	CANOPY JETTISON MECHANISM	3-56
31	CANOPY EMERGENCY JETTISON MECHANISM	3-60
32	CENTRE FUSELAGE ACCESS DOORS	3-64
33	AFT FUSELAGE & JOINT ATTACHMENT	3-68
34	AFT FUSELAGE STRUCTURE	3-70
35	AFT FUSELAGE SPEED BRAKES	3-74

LIST OF ILLUSTRATIONS (Continued)

FIGURE	TITLE	PAGE
36	DELETED	3-76
	SECTION 4 – LANDING GEAR	
37	LANDING GEARS	4-02
38	COMPLETE LANDING GEAR	4-04
39	NOSE LANDING GEAR SHOCK & DRAG STRUTS	4-08
40	NOSE WHEEL STEERING	4-12
41	NOSE LANDING GEAR DOOR OPERATING MECHANISM	4-14
42	NOSE LANDING GEAR DOOR	4-16
43	MAIN LANDING GEAR SHOCK STRUT	4-18
44	MAIN LANDING GEAR SIDESTAY & UPLOCK	4-22
45	MAIN LANDING GEAR DOOR OPERATING MECHANISM	4-26
46	MAIN LANDING GEAR DOOR	4-30
47	MAIN LANDING GEAR LEG DOOR & LATCH MECHANISM	4-32
	SECTION 5 – POWER PLANT	
48	COMPLETE POWER PLANT	5-02
49	POWER PLANT MOUNTS	5-06
50	DELETED	5-08
51	DELETED	5-12
52	JET PIPE & DRAIN	5-16
53	POWER PLANT DRAINS	5-20
54	ZONE 1 & 2 & GENERATOR COOLING	5-24
55	ZONE 2 COOLING JET PUMPS	5-26
	SECTION 6 – FUEL SYSTEM	
56	FUEL SYSTEM SCHEMATIC	6-02
57	FORWARD FUSELAGE FUEL SYSTEM & FORWARD CELL	6-04
58	CENTRE FUEL CELL	6-08
59	REAR FUEL CELL	6-12
60	FUEL COLLECTOR TANK & FEED SYSTEM	6-16
61	FUEL VENT SYSTEM	6-20
61A	FUSELAGE AUXILIARY FUEL SYSTEM	6-24
61B	AUX FUEL AIR PRESSURE REGULATOR PANEL	6-28
61C	AUXILIARY FUEL TANKS & DISCONNECTS	6-30
61D	FUSELAGE PYLONS – AUX FUEL TANKS	6-32
	SECTION 7 – FLIGHT CONTROLS	
62	FLIGHT CONTROLS	7-02
63	FORWARD FUSELAGE BELLCRANK & LEVERS	7-04
64	FORWARD FUSELAGE CONTROL RODS	7-08
65	COCKPIT RUDDER & BRAKE CONTROLS	7-12
66	COCKPIT RUDDER & BRAKE CONTROLS	7-16
67	CONTROL COLUMN	7-20
68	COCKPIT FLIGHT CONTROL LEVERS	7-24
69	AILERON CONTROLS	7-26

LIST OF ILLUSTRATIONS (Continued)

FIGURE	TITLE	PAGE
70	WING AILERON TAB CONTROL	7-30
71 (1 OF 2)	POWER AND FLAP CONTROLS	7-34
71 (2 OF 2)	POWER AND FLAP CONTROLS	7-36
72	POWER & FLAP CONTROL BOX	7-38
73	CENTRE CONSOLE POWER & FLAP LEVERS	7-42
74	FLAP FOLLOW UP SYSTEM MECHANISM	7-44
75	FLAP INTERCONNECT	7-48
76	AFT FUSELAGE BELLCRANK & LEVERS	7-50
77	AFT FUSELAGE CONTROL RODS	7-54
77A	ELEVATOR CONTROL RODS & TORQUE TUBE	7-58
78	ELEVATOR TRIM & GEARED TAB CONTROLS	7-62
	SECTION 8 - HYDRAULIC SYSTEM	
79	HYDRAULIC SYSTEM	8-02
80	COMPLETE HYDRAULIC SYSTEM	8-04
81	NOSE WHEEL WELL HYDRAULIC SYSTEM	8-06
82	FUSELAGE STA 149-206 HYDRAULIC SYSTEM	8-10
82A	LANDING GEAR EMERGENCY CONTROL	8-14
83	BRAKE HYDRAULIC SYSTEM	8-16
84	FUSELAGE STA 206-277 HYDRAULIC SYSTEM	8-20
85	ENGINE COMPARTMENT HYDRAULIC SYSTEM	8-22
86	ENGINE COMPARTMENT HYDRAULIC VALVES & FILTERS	8-26
87 (1 OF 2)	ENGINE COMPARTMENT HYDRAULIC SYSTEM	8-30
87 (2 OF 2)	ENGINE COMPARTMENT HYDRAULIC SYSTEM	8-30B
88	WING FILLET HYDRAULIC SYSTEM	8-34
89	MAIN LANDING GEAR & DOOR HYDRAULIC SYSTEM	8-38
90	FLAP ACTUATOR HYDRAULIC SYSTEM	8-44
91	SPEEDBRAKE ACTUATOR & HYDRAULIC LINES	8-46
	SECTION 9 - HEAT & VENT & PRESSURIZATION SYSTEM	
92	HEAT & VENT & PRESSURIZATION SYSTEM	9-02
93	COMPLETE HEAT & VENT & PRESSURIZATION SYSTEM	9-04
94	PRESSURE REGULATOR, DUMP VALVE & STATIC LINES	9-06
95	WINDSHIELD RAIN REMOVAL SYSTEM	9-08
96	COCKPIT HEAT DISTRIBUTION & RAM AIR	9-10
97	COCKPIT CANOPY SEAL SYSTEM	9-14
98	WATER SEPARATOR & DISTRIBUTION SYSTEM	9-18
99	ENGINE TO FIREWALL BLEED AIR SYSTEM	9-22
	SECTION 10 - ANTI ICING SYSTEM	
100	WINDSHIELD & CANOPY DEMIST SYSTEM	10-02
100A	ENGINE ICE DETECTOR	10-04
	SECTION 11 - OXYGEN SYSTEM	
101	COMPLETE OXYGEN SYSTEM	11-02

LIST OF ILLUSTRATIONS (Continued)

FIGURE	TITLE	PAGE
102	ELECTRICAL EQUIPMENT	12-02
103 (1 OF 2)	NOSE COMPARTMENT ELECTRICAL EQUIPMENT	12-06
103 (2 OF 2)	NOSE COMPARTMENT ELECTRICAL EQUIPMENT	12-06B
104	STORAGE BATTERIES	12-10
105 (1 OF 2)	MAIN DISTRIBUTION & RELAY PANELS	12-12
105 (2 OF 2)	MAIN DISTRIBUTION & RELAY PANELS	12-12B
106 (1 OF 2)	NOSE COMPARTMENT ELECTRICAL HARNESS	12-16
106 (2 OF 2)	NOSE COMPARTMENT ELECTRICAL HARNESS	12-18
106A	FUSELAGE TROUGH ELECTRICAL HARNESS ATTACHMENTS	12-22
107	COCKPIT ELECTRICAL EQUIPMENT	12-26
108	FORWARD COCKPIT ELECTRICAL EQUIPMENT	12-30
109	LH CONSOLE ELECTRICAL EQUIPMENT	12-34
109A	RH CONSOLE ELECTRICAL EQUIPMENT	12-38
110	CENTRE CONSOLE ELECTRICAL EQUIPMENT	12-42
111	CENTRE CONSOLE ELECTRICAL EQUIPMENT	12-46
112 (1 OF 2)	CENTRE CONSOLE CIRCUIT BREAKER PANEL	12-50
112 (2 OF 2)	CENTRE CONSOLE CIRCUIT BREAKER PANEL	12-50B
113	INSTRUMENT PANEL SHROUD & LIGHTING EQUIPMENT	12-52
114	COCKPIT ELECTRICAL HARNESS	12-56
114A	COCKPIT ELECTRICAL HARNESS	12-62
115	CENTRE FUSELAGE ELECTRICAL EQUIPMENT	12-66
116	DELETED	12-70
117 (1 OF 2)	WING FILLET ELECTRICAL HARNESS	12-72
117 (2 OF 2)	WING FILLET ELECTRICAL HARNESS	12-74
118 (1 OF 2)	POWER PLANT ELECTRICAL EQUIPMENT	12-76
118 (2 OF 2)	POWER PLANT ELECTRICAL EQUIPMENT	12-78
119	WING ELECTRICAL EQUIPMENT	12-82
120	WING ELECTRICAL HARNESS	12-86
121	REAR FUSELAGE ELECTRICAL EQUIPMENT	12-90
	SECTION 13 - ELECTRONIC EQUIPMENT	
122	UNDERWATER ACOUSTIC LOCATOR BEACON	13-02
123	NOSE COMPARTMENT ELECTRONICS & ANTENNAS	13-04
123A	NOSE COMPARTMENT ELECTRONICS & ANTENNAS (FOR AIRCRAFT WING C-12-114-000/CF-459 OR /CF-461, /CF-462, /CF-463 AND /CF-464 EMBODIED)	13-04D
124	FUSELAGE STA 110 BULKHEAD ELECTRONIC	13-06
125 (1 OF 2)	NOSE COMPARTMENT ELECTRONIC HARNESS	13-10
125 (2 OF 2)	NOSE COMPARTMENT ELECTRONIC HARNESS	13-12
126	COCKPIT ELECTRONIC EQUIPMENT	13-16
127	FUSELAGE STA 149 BULKHEAD ELECTRONIC	13-20
128	COCKPIT ELECTRONIC HARNESS	13-22
128A (1 OF 3)	AUTOMATIC DIRECTION FINDING SYSTEM - DF206A	13-26
128A (2 OF 3)	AUTMOATIC DIRECTION FINDING SYSTEM - DF206A	13-27
128A (3 OF 3)	AUTOMATIC DIRECTION FINDING SYSTEM - DF206A	13-28
	SECTION 14 - INSTRUMENT EQUIPMENT	
129 (1 OF 2)	COCKPIT INSTRUMENT EQUIPMENT	14-02
129 (2 OF 2)	COCKPIT INSTRUMENT EQUIPMENT	14-02B

LIST OF ILLUSTRATIONS (Continued)

FIGURE	TITLE	PAGE
130	INSTRUMENT PANEL	14-06
130A	FORWARD FUSELAGE INSTRUMENT EQUIPMENT	14-12
130B	CENTRE FUSELAGE INSTRUMENT EQUIPMENT	14-14
	SECTION 15 - PITOT STATIC SYSTEM	
131	COCKPIT AREA PITOT STATIC SYSTEM	15-02
132	WING PITOT STATIC SYSTEM	15-06
	SECTION 16 - FURNISHINGS EQUIPMENT	
133	COCKPIT FURNISHINGS	16-02
134	COCKPIT LINING & TRIM	16-06
	SECTION 17 - LOOSE EQUIPMENT	
135C	PROBE COVER, LOCK & RELEASE PINS	17-02
135D	SEAT & CANOPY SAFETY PINS	17-04
	PART 3	
136	TOW BAR, BRIDLE & TETHER CABLE	2
137	DELETED	4
138	ENGINE FLOOR STAND & SLINGS	6
139	RIG PINS, INITIATOR DUMMY & GAUGES	10
140	FLAP, AILERON & AILERON SPRING TAB RIG BOARD	14
141	RIGGING, GEAR LOCK & CANOPY GROUND SAFETY PINS	16
142	SPECIAL TOOLS & ADAPTERS	20
143	CANOPY STRUT, DUMMY CATAPULT & INITIATOR	24
144	BLANKING PLUGS	26

MODIFICATION STATUS OF THIS CFTO

MOD	ECP	STATUS	MOD	ECP	STATUS	MOD	ECP	STATUS	MOD	ECP	STATUS
5/2		INC	6A/35	71	RES	6A/88	128	RES	6A/141	169	RES
5/17		INC	6A/36	72	RES	6A/89	134	RES	6A/142	177	RES
5/23		INC	6A/37	73	RES	6A/90	125	RES	6A/143	178	RES
5/26		INC	6A/38	76	RES	6A/91		C	6A/144	179	RES
5/37		INC	6A/39	78	RES	6A/92	10	RES	6A/145	180	RES
5/46		INC	6A/40	74	R	6A/93	144	RES	6A/146	165	RES
5/49		INC	6A/41	75	RES	6A/94	130	RES	6A/147	172	RES
5/54		INC	6A/42	56	RES	6A/95	142	RES	6A/148	182	RES
5/56		INC	6A/43	58	RES	6A/96	143	RES	6A/149	183	NA
5/84		INC	6A/44	54	RES	6A/97		RES	6A/150		C
5/98		INC	6A/45		C	6A/98		NA	6A/151		C
5A/4		INC	6A/46	89	RES	6A/99		C	6A/152	186	RES
5A/9		INC	6A/47	91	RES	6A/100	150	RES	6A/153	57	RES
5A/15		INC	6A/48	90	RES	6A/101	151	RES	6A/154	131	RES
5A/16		INC	6A/49	94	RES	6A/102	152	RES	6A/155	187	NA
5A/19	227	INC	6A/50	80	RES	6A/103	148	RES	6A/156	188	RES
5A/22		INC	6A/51	81	RES	6A/104	108	RES	6A/157		C
5A/24		INC	6A/52	83	RES	6A/105		RES	6A/158	189	RES
			6A/53		RES	6A/106		R	6A/159	191	RES
6A/1		C	6A/54	93	RES	6A/107	106	RES	6A/160		RES
6A/2	24	RES	6A/55	84	RES	6A/108	111	RES	6A/161		RES
6A/3	30	RES	6A/56		C	6A/109	147	RES	6A/162	175	RES
6A/4	17	RES	6A/57	113	RES	6A/110	208	RES	6A/163		C
6A/5	31	RES	6A/58	112	RES	6A/111		RES	6A/164		RES
6A/6	34	RES	6A/59	82	RES	6A/112	137	INC	6A/165		C
6A/7	32	RES	6A/60	120	RES	6A/113	153	RES	6A/166	194	RES
6A/8	33	RES	6A/61	100	RES	6A/114	155	RES	6A/167	195	RES
6A/9	36	INC	6A/62		RES	6A/115	156	RES	6A/168	210	INC
6A/10	44	RES	6A/63	114	RES	6A/116	159	RES	6A/169		RES
6A/11	27	RES	6A/64	98	RES	6A/117		C	6A/170		RES
6A/12	46	RES	6A/65	95	RES	6A/118	163	R	6A/171		RES
6A/13		C	6A/66	109	RES	6A/119		C	6A/172		RES
6A/14	40	RES	6A/67		C	6A/120		C	6A/173		R
6A/15	42	RES	6A/68	119	RES	6A/121	133	RES	6A/174		C
6A/16	39	RES	6A/69	104	RES	6A/122		C	6A/175	211	RES
6A/17	15	RES	6A/70		C	6A/123	193	RES	6A/176	205	RES
CF-018	1	INC	6A/71	99	RES	6A/124	192	RES	6A/177		R
6A/19	41	RES	6A/72	118	RES	6A/125	79	RES	6A/178		R
6A/20	47	RES	6A/73	85	RES	6A/126	168	RES	6A/179	200	RES
6A/21	51	RES	6A/74	101	RES	6A/127		R	6A/180	200	RES
6A/22		R	6A/75	103	RES	6A/128	124	RES	6A/181	200	RES
6A/23	45	RES	6A/76	96	RES	6A/129	167	RES	6A/182	200	RES
6A/24		C	6A/77		C	6A/130	170	RES	6A/183	200	RES
6A/25	68	RES	6A/78	50	RES	6A/131	166	RES	6A/184	200	RES
6A/26	61	RES	6A/79	110	RES	6A/132		RES	6A/185	200	RES
6A/27	66	RES	6A/80		R	6A/133		RES	6A/186		C
6A/28	60	RES	6A/81	129	RES	6A/134		RES	6A/187	200	INC
6A/29	62	RES	6A/82	122	RES	6A/135	171	RES	6A/188	200	RES
6A/30	65	RES	6A/83	126	RES	6A/136		RES	6A/189		RES
6A/31	55	RES	6A/84	136	RES	6A/137		RES	6A/190	201	RES
6A/32	59	RES	6A/85		RES	6A/138	157	RES	6A/191	203	RES
CF-033	67	INC	6A/86	141	RES	CF-139	173	INC	6A/192	204	RES
6A/34	77	RES	6A/87	140	RES	6A/140	158	RES	6A/193		RES

(Sheet 1)

INC	Modification incorporated in this CFTO
NA	Modification not applicable to CFTO
C	Modification cancelled
R	Modification replaced by other modification
RES	Rescinded

MODIFICATION STATUS OF THIS CFTO

MOD	ECP	STATUS	MOD	ECP	STATUS	MOD	ECP	STATUS	MOD	ECP	STATUS
6A/194		RES	6A/247		NA	6A/300		NA	CF-353		INC
6A/195	209	RES	6A/248		RES	CF-301		INC	CF-354		INC
6A/196	206	RES	6A/249		RES	6A/302		NA	CF-355		R
6A/197	181	RES	6A/250		RES	6A/303		INC	CF-356		INC
6A/198		R	6A/251		NA	6A/304		INC	CF-357		INC
6A/199	212	RES	CF-252		RES	6A/305		C	CF-358		C
6A/200		RES	6A/253		RES	6A/306		INC	CF-359		NA
6A/201		RES	6A/254		RES	6A/307		NA	CF-360		INC
6A/202		RES	6A/255		NA	6A/308		NA	CF-361		INC
6A/203	198	RES	6A/256		RES	6A/309		NA	CF-362		R
6A/204		RES	6A/257		RES	6A/310		INC	CF-363		INC
6A/205		C	CF-258		RES	CF-311		INC	CF-364		INC
6A/206		R	6A/259		INC	6A/312		R	CF-365		INC
6A/207	216	RES	6A/260		RES	CF-313		INC	CF-366		RES
6A/208		RES	6A/261		NA	6A/314		INC	CF-367		INC
6A/209		RES	6A/262		RES	CF-315		INC	CF-368		INC
6A/210		RES	6A/263		INC	6A/316		NA	CF-369		INC
6A/211	217	RES	CF-264		INC	6A/317		INC	CF-370		INC
6A/212		RES	6A/265		NA	6A/318		INC	CF-371		INC
6A/213		RES	6A/266		RES	CF-319		INC	CF-372		INC
6A/214	219	RES	6A/267		RES	CF-320		INC	CF-373		INC
6A/215		C	6A/268		RES	CF-321		INC	CF-373		INC
6A/216		C	6A/269		C	6A/322		NA	CF-374		INC
6A/217		RES	6A/270		NA	6A/323		C	CF-375		RES
6A/218	225	RES	6A/271		INC	6A/324		NA	CF-376		INC
6A/219		RES	6A/272		C	CF-325		INC	CF-377		NA
6A/220		C	6A/273		RES	6A-326		INC	CF-378		INC
6A/221	223	R	6A/274		INC	6A-327		R	CF-379		INC
6A/222		RES	6A/275		NA	6A-328		R	CF-380		RES
6A/223		RES	6A/276		R	CF-329		INC	CF-381		NA
6A/224		RES	6A/277		R	CF-330		INC	CF-382		INC
6A/225		RES	CF-278		INC	CF-331		INC	CF-383		INC
6A/226	115	RES	6A/279		NA	CF-332		INC	CF-384		NA
6A/227		RES	6A/280		C	CF-333		INC	CF-385		INC
6A/228		R	6A/281		R	CF-334		INC	CF-386		NA
6A/229		RES	CF-282		INC	6A/335		INC	CF-387		INC
6A/230		RES	6A/283		C	6A/336		NA	CF-388		NA
6A/231		C	CF-284		INC	6A/337		INC	CF-389		INC
6A/232		RES	6A/285		NA	CF-338		INC	CF-390		NA
6A/233		RES	6A/286		C	CF-339		INC	CF-391		NA
6A/234		RES	6A/287		INC	CF-340		INC	CF-392		INC
6A/235		RES	6A/288		NA	6A/341		INC	CF-393		INC
6A/236	207	RES	6A/289		C	6A/342		NA	CF-394		NA
CF-237		INC	6A/290		C	6A/343		INC	CF-395		INC
6A/238		R	6A/291		R	6A/344		INC	CF-396		INC
6A/239		RES	CF-292		INC	6A/345		INC	CF-397		INC
6A/240	214	RES	CF-293		INC	CF-346		INC	CF-398		INC
6A/241		RES	6A/294		C	6A/347		INC	CF-399		INC
CF-242		RES	6A/295		INC	6A/348		INC	CF-400		INC
CF-243		RES	6A/296		INC	6A/349		NA	CF-401		INC
6A/244		RES	6A/297		R	6A/350		INC	CF-402		INC
6A/245		RES	6A/298		R	CF-351		INC	CF-403		INC
CF-246		INC	6A/299		INC	CF-352		INC	CF-404		NA

(Sheet 2)

INC	Modification incorporated in this CFTO
NA	Modification not applicable to CFTO
C	Modification cancelled
R	Modification replaced by other modification
RES	Rescinded

MODIFICATION STATUS OF THIS CFTO

MOD	ECP	STATUS	MOD	ECP	STATUS	MOD	ECP	STATUS	MOD	ECP	STATUS
CF-405		NA	CF-458		INC	CF-511			6B/1		INC
CF-406		R	CF-459		INC	CF-512		INC	6B/2		INC
CF-407		INC	CF-460		INC	CF-513		INC	6B/3		INC
CF-408		NA	CF-461		INC	CF-514		INC	CD-004		INC
CF-409		C	CF-462		INC	CF-515		INC	6B/5		INC
CF-410		INC	CF-463		INC	CF-516		NA	CD-006		INC
CF-411		INC	CF-464		INC	CF-520		INC	6B/7		NA
CF-412		NA	CF-465		INC	CF-521		INC	6B/8		INC
CF-413		R	CF-466			CF-526		INC	6B/9		INC
CF-414		INC	CF-467		INC	CF-528		INC	6B/10		INC
CF-415		NA	CF-468			CF-530		INC	6B/11		INC
CF-416		INC	CF-469		INC	CF-541		INC	6B/12		C
CF-417		NA	CF-470						6B/13		INC
CF-418		INC	CF-471		INC				6B/14		NA
CF-419		INC	CF-472		INC				6B/15		NA
CF-420		INC	CF-473		INC				6B/16		NA
CF-421		INC	CF-474						6B/17		NA
CF-422		INC	CF-475						6B/18		NA
CF-423		INC	CF-476		INC				CD-019		INC
CF-424		INC	CF-477		INC				CD-020		INC
CF-425		R	CF-478						6B/21		
CF-426		INC	CF-479		INC				6B/22		C
CF-427		R	CF-480						6B/23		
CF-428		INC	CF-481						6B/24		
CF-429		NA	CF-482		INC				6B/25		INC
CF-430		INC	CF-483						6B/26		
CF-431		INC	CF-484						6B/27		
CF-432		INC	CF-485						6B/28		
CF-433		INC	CF-486						CD-029		C
CF-434		INC	CF-487		INC				CD-030		INC
CF-435		NA	CF-488		INC				CD-031		INC
CF-436		INC	CF-489		INC				CD-033		INC
CF-437		INC	CF-490						CS-037		INC
CF-438		INC	CF-491						NS-208		INC
CF-439		INC	CF-492						NS-212		INC
CF-440		INC	CF-493								
CF-441		INC	CF-494								
CF-442		INC	CF-495								
CF-443		INC	CF-496								
CF-444		INC	CF-497								
CF-445		INC	CF-498		INC						
CF-446		INC	CF-499								
CF-447		INC	CF-500								
CF-448		INC	CF-501		INC						
CF-449		INC	CF-502								
CF-450		INC	CF-503								
CF-451		INC	CF-504		C						
CF-452			CF-505		INC						
CF-453		R	CF-506								
CF-454		NA	CF-507		INC						
CF-455			CF-508		INC						
CF-456		INC	CF-509		INC						
CF-457		INC	CF-510		INC						

(Sheet 3)

INC	Modification incorporated in this CFTO
NA	Modification not applicable to this CFTO
C	Modification cancelled
R	Modification replaced by other modification
RES	Rescinded

PART 1

INTRODUCTION

TABLE OF CONTENTS

PARA	TITLE	PAGE
	FOREWORD	
1	GENERAL	3
2	PURPOSE OF THE PART LIST	3
3	CONSTITUENT ELEMENT	3
4	LIMITATIONS	3
	CODING	
5	GENERAL	3
6	VENDOR ITEMS	3
7	GOVERNMENT SUPPLIED MATERIAL	3
8	DELETED	3
9	CANADAIR STANDARD PARTS	3
10	SPECIFICATION STANDARDS	3
	USAGE CODE	
11	GENERAL	3
	GROUP ASSEMBLY PART LIST	
12	PART 2 SECTIONING	3
13	FIGURE AND INDEX COLUMN	4
14	PART NUMBER COLUMN	4
15	NOMENCLATURE COLUMN	4
16	USAGE CODE COLUMN	4
17	UNITS PER ASSEMBLY COLUMN	4
18	INDENTION	4
19	MULTI ASSEMBLY BREAKDOWN	4
20	ALTERNATIVE PARTS	4
21	SPARE PARTS	4
22	CONTROLLED INTERCHANGEABLE PARTS AND ASSEMBLIES	4
23	CONTROLLED REPLACEABLE PARTS AND ASSEMBLIES	4
24	REFERENCING	4
25	CONTINUED BREAKDOWNS	4
27	HANDED ASSEMBLIES	5
28	ATTACHING PARTS	5
29	PURCHASED PARTS	5
30	CANADAIR SPECIFICATION CONTROL DRAWINGS	5
	ILLUSTRATIONS	
31	GENERAL	5
32	EXPLODED VIEWS	5
33	SYSTEM ILLUSTRATIONS	5

PARA	TITLE	PAGE
	DRAWING NUMBERING SYSTEM	
34	GENERAL	5
35	MODEL NUMBER	5
36	BASIC FUNCTION NUMBER	6
	FINDING AN ITEM IN THE PART LIST	
37	GENERAL	6
38	FINDING AN ITEM WHEN PART NUMBER IS KNOWN	6
39	FINDING AN ITEM WHEN PART NUMBER IS UNKNOWN	6
	SPECIAL SERVICE TOOLS	
40	GENERAL	6
	BULK MATERIAL CHART	
41	GENERAL	6
43	LISTING ARRANGEMENT	6
44	TUBE DIMENSIONS	6
45	MATERIAL SPECIFICATION	6
	NUMERICAL PART LIST	
46	GENERAL	6
47	PART NUMBER COLUMN	7
48	FIGURE AND INDEX COLUMN	7
49	QUANTITY COLUMN	7
50	ALTERNATIVE PART NUMBERS	7
	NOMENCLATURE ABBREVIATIONS AND CONTRACTIONS	
51	GENERAL	7

LIST	TITLE	
1	PROPRIETARY NAMES AND ADDRESSES	8
2	ABBREVIATIONS AND CONTRACTIONS	13

CHART	TITLE	
1	TUTOR AIRCRAFT GENERAL ARRANGEMENT	16
2	TUTOR AIRCRAFT STATIONS	17
3	SPECIFICATIONS-COMMERCIAL DESIGNATIONS OF TUBING	4-2

PART 1

INTRODUCTION

FOREWORD

GENERAL

1. This part is applicable to the Canadian Forces Tutor aircraft, manufactured by Canadair Limited, Montreal, Quebec, Canada.

PURPOSE OF THE PART LIST

2. The part list has been prepared to identify parts for the ordering of spares.

CONSTITUENT ELEMENT

3. This part list describes the procurable items installed on the aircraft, according to engineering drawings, and includes modifications requested by the Canadian Forces.

LIMITATIONS

4. The part list is not an authority for assembly or disassembly.

CODING

GENERAL

5. To conserve space and facilitate quick reference, codes are used for vendor items, government supplied parts, and Canadair standard parts.

VENDOR ITEMS

6. Vendor code numbers are used in the Nomenclature column of the Detailed Parts List to identify the manufacturer of a part that is purchased by the contractor manufacturing the aircraft. Five-digit Manufacturers' codes are preceded by the letter ''V''. The manufacturer codes are those listed in the Canadian Government Catalog of Materiel A-LM-137-COM/LX-001. A complete list of the Manufacturers' codes used in the detailed Parts List are listed in List 1 of this introduction.

GOVERNMENT SUPPLIED MATERIAL

7. Government supplied material are indicated by (G.S.M.).

8. DELETED

CANADAIR STANDARD PARTS

9. DELETED

SPECIFICATION STANDARDS

10. Following is a list of approved standard designations:

STANDARDS	DESIGNATION
a. Military standards	MS
b. Air Force-Navy	AN
c. United States Air Force	USAF
(1) Air Force	AF
(2) Army-Air Force	AAF
(3) Naval Aircraft Factory	NAF
d. National Aircraft Standards Committee	NAS

USAGE CODE

GENERAL

11. A usage code indicates parts limited to specific aircraft.

NOTE

Parts without a usage code are applicable to all aircraft.

PAGE NUMBERING

12. Pages are numbered consecutively within part 1.

GROUP ASSEMBLY PART LIST

PART 2 SECTIONING

13. Part 2, the group assembly part list, is divided into sections, numbered consecutively. Each section, such as wing, landing gear, fuel system, electrical system, etc., lists all the

installations, assemblies and detail parts. Pages are numbered consecutively within each Section.

FIGURE AND INDEX COLUMN

14. This column contains the figure and index numbers. Index numbers are listed against items for identification on the illustration.

PART NUMBER COLUMN

15. In addition to part numbers, specification and type numbers are given where applicable. Detail parts which have been fabricated into a permanent assembly are not listed.

NOMENCLATURE COLUMN

16. The nomenclature has been taken from the engineering drawing title block. Additional descriptive information, such as function, location, size, etc., may appear in parentheses.

USAGE CODE COLUMN

17. Parts with usage limitations are coded as per Paragraph 11, preceding.

UNITS PER ASSEMBLY COLUMN

18. Requirements shown in the Units per Assembly column are per installation or assembly detail. Installations which are non-procurable, carry the letters NP. Items used as required carry a quantity of 1 in the Units per Assembly column and (AS REQUIRED) in the nomenclature. REF indicates that the item is referenced as per Paragraphs 23 and 24 following.

INDENTION

19. The item title indention in the nomenclature of the group assembly part list indicates the relationship between details and assemblies. To determine parts which may be stocked as assemblies or details of assemblies, the indention of the nomenclature is used. Thus, component parts which are assembled upon another installation or assembly are listed with the nomenclature starting one column to the right. The detail part of assembly must be within the same effectivity range as the pertinent next assembly.

MULTI ASSEMBLY BREAKDOWN

20. When several assemblies are listed consecutively due to different locations or effectivities, the detail parts for these assemblies, if any, are listed following the last assembly and are applicable to all these assemblies. The effectivity code will relate the detail part to its next assembly.

ALTERNATIVE PARTS

21. An alternative part follows the part it may replace, separated by the word OR in the Nomenclature column. No requirements are entered in the Units per Assembly column.

SPARE PARTS

22. In addition to production part numbers, spare part numbers are listed in the Part Number column. These spare part numbers are listed immediately following their production items and are identified as: (SPARE FOR...), in the same indention column without requirements.

CONTROLLED INTERCHANGEABLE PARTS AND ASSEMBLIES

23. Controlled interchangeable parts and assemblies are production parts which can be installed without rework and are identified as such in the nomenclature by (INTERCHANGEABLE) in parentheses.

CONTROLLED REPLACEABLE PARTS AND ASSEMBLIES

24. Controlled replaceable parts and assemblies are production parts which must be reworked to obtain a suitable fit. They are identified as such in the nomenclature by (REPLACEABLE) in parentheses.

REFERENCING

25. When applicable, parts which are interrelated, but are physically outside the figure, are referenced.

CONTINUED BREAKDOWNS

26. Engineering drawings which cannot be covered by one illustration will show, at the

end of the breakdown, the figure number or section to which the breakdown continues. In these continued figures, the same drawing title appears, REF is shown in the units per assembly column, and the originating figure or section indicated in the nomenclature.

27 References within a section are by figure number. A reference to another section is by section number only.

HANDED ASSEMBLIES

28 The breakdown and the attaching parts for identical or nearly identical LH and RH assemblies cover the left-hand assemblies only. The differing items are listed as (LH) and (RH) or (port) and (starboard). When handed assemblies differ materially, a separate breakdown with an illustration is given.

ATTACHING PARTS

29 Attaching parts are listed in the same indention column as the assembly or unit they attach.

NOTE

Attaching parts must always be ordered separately, since they are not details of the item or assembly.

PURCHASED PARTS

30 Parts purchased by Canadair Limited to vendors drawings or specifications are not broken down in the part list.

CANADAIR SPECIFICATION CONTROL DRAWINGS

31 When parts purchased to Canadair specification control drawings are to be listed, the vendor part number, or the military specification is used.

ILLUSTRATIONS

GENERAL

32 Illustrations, which accompany each compilation breakdown, normally depict the left hand installation or assembly breakdown with corresponding item indices for identification purposes.

EXPLODED VIEWS

33 Exploded views are used for the following purposes:

(a) To illustrate parts in greater detail.

(b) To illustrate parts used only on right hand installations or assemblies.

(c) To illustrate hidden items.

SYSTEM ILLUSTRATIONS

34 At the beginning of each section dealing with a particular system installed on the aircraft, a system illustration with a general breakdown is included. These breakdowns show key locations embodied in the particular system, and are referenced in the nomenclature to the figure where the detail breakdown is called.

DRAWING NUMBERING SYSTEM

GENERAL

35 All drawing numbers assigned to the Tutor aircraft are divided into two parts by a dash. The number preceding the dash designates the aircraft model, while the number following the dash is the basic function number.

MODEL NUMBER

36 The aircraft model number - or drawing prefix - indicates the aircraft for which the part was designed. In this part List, the prefixes of the drawings are 41, 44 and 28.

BASIC FUNCTION NUMBER

37 The basic function number is determined by the aircraft component. Thus, wing drawings are assigned numbers in the 10,000 series, fuselage drawings in the 30,000 series and power plant drawings in the 60,000 series, etc.

FINDING AN ITEM IN THE PART LIST

GENERAL

38 Both the numerical part list and the table of contents for Part 2 and Part 3 are employed to find an item in the part list.

FINDING AN ITEM WHEN PART NUMBER IS KNOWN

39 To find an item when the part number is known proceed as follows:

(a) Turn to Part 5, the numerical part list and find the desired part number.

(b) Note the figure number, and index number where given. (Not all items carry an index number.)

(c) Turn to the noted figure to obtain the desired information.

FINDING AN ITEM WHEN PART NUMBER IS UNKNOWN

40 To find an item, the function or next assembly of which is known, but the part number unknown, proceed as follows:

(a) Turn to the list of illustrations, locate the next assembly and note the page number.

(b) Turn to the indicated page number.

(c) Locate the item on the illustration.

(d) Note the index number (refer to (f) following).

(e) In the accompanying breakdown the part number and title will be found against the index number.

(f) An unindexed part which is illustrated may be found with its assembly, or, if the assembly is referenced, it may be found in the referenced figure.

SPECIAL SERVICE TOOLS

GENERAL

41 Special tools and ground handling equipment purchased by the Canadian Forces are listed in Part 3. Pages are numbered consecutively within Part 3.

BULK MATERIAL CHART

GENERAL

42 Part 4 gives information to make line assemblies 3/4 inch outside diameter and under, and also lists linings and trims used as furnishings which are called out in Part 2.

43 Chart 3, Specifications - Commercial Designations of Tubing, is for reference purposes only.

LISTING ARRANGEMENT

44 Listing is per system breakdown with the part numbers in numerical order. Pages are numbered consecutively within Part 4.

TUBE DIMENSIONS

45 Tube dimensions are in fractions of an inch (outside diameter), wall thickness in decimals of an inch and straight length in inches and fractions.

MATERIAL SPECIFICATION

46 This column contains the following information:

(a) First line: Company material specification.

(b) Second line: Canadian Forces stocked material specification.

(c) Third line: Canadian Forces reference.

NUMERICAL PART LIST

GENERAL

47 The numerical part list, Part 5, is compiled in sequence according to PROC 100-8, Part 5, and contains part number columns, figure and index columns, and quantity columns.

Pages are numbered consecutively within Part 5.

PART NUMBER COLUMN

48. The part number column, appearing in each sub-division of a page, contains the item drawing numbers as given in the group assembly part list and the special service tool list.

FIGURE AND INDEX COLUMN

49. This column lists the figure and index numbers as given against the relevant items in Part 2 and Part 3.

QUANTITY COLUMN

50. The quantity column summarizes the call-outs in Part 2 and Part 3, but is not necessarily the total quantity per aircraft.

ALTERNATIVE PART NUMBERS

51. Parts listed in the numerical part list, for which requirements in the quantity per aircraft column are not shown, are those parts called out in Part 2 as alternative parts, (refer to Paragraph 20, preceding).

NOMENCLATURE ABBREVIATIONS AND CONTRACTIONS

GENERAL

52. List 2 supplements and follows the principles of MIL-STD-12C, Schedule of Abbreviations.

LIST 1 PROPRIETARY NAMES AND ADDRESSES

V00198 Pratt and Whitney Canada Inc.
1000 Marie-Victorin Blvd.
Longueuil QC J4G 1A1
Tel: 1-800-268-8000
Fax: 514-647-3620

V00502 Adel Division of
De Laval Turbine Inc.
Burbank CA 91500

V01212 Federal-Mogul Corp.
Government Sales Dept.
26555 Northwestern Hwy. 1966
Detroit MI 48235
Tel: 810-354-7923

V02121 Menasco Aerospace Ltd.
1400 S. Sercice Rd. W.
Oakville ON L6L 5Y7
Tel: 905-827-7777

V02195 American Fork and Hoe Co.
Cleveland OH 44100

V02660 Amphenol Corp. Spectra-Strip/ITD
720 Sherman Ave.
Hamdem CT 06514

V02695 Morse Indutrial Corp.
Sealmaster Bearing Div.
1901 Bilter Rd.
P.O. Box 1588
Aurora IL 60507

V02919 Aiken Industries Inc.
Panorama City CA

V03038 Long-Lok Corp.
Sub. of Rockwood Group
14119 Chadron Ave.
Hawthorn CA 90250
Tel: 310-675-9500

V03296 Nylon Molding Corp.
1617 S. California
Monrovia CA 91016-4621
Tel: 800-321-1243

V03554 Amphenol Canada Ltd.
20 Melford Dr.
P.O.BOX 7966
Scarborough ON M1R 2X6
Tel: 416-291-4401

V03743 Appleton Electric Co.
Div. of Emerson Electric Co.
2205 12th Ave.
South Milwaukee WI 53172-2541
Tel: 414-762-8400

V04073 Aviel Electronics Inc.
5530 S. Valley View Suite 103
Las Vegas NV 89119
Tel: 702-739-8155

V04211 Allied Healthcare Products Inc.
Coastal Dental Div.
Sub. of Allegheny International
Ashland OR 97520

V04319 The Advanced Products Co.
33 Defco Park Rd.
North Haven CT 06473-1129
Tel: 203-239-3341

V04440 Atlas Electric Devices Co.
4114 N Ravenswood Ave.
Chicago IL 60613-1831
Tel: 312-327-4520

V05257 Computing Devices of Canada Ltd.
Div. of Computing Devices
International Inc.
3785 Richmond Rd.
Nepean ONT K2H 5B7
Tel: 613-596-7000

V05402 Singer Co. The Control Div.
Melrose Park IL 60160

V05695 Master Pneumatic-Detroit Inc.
6701 18 Mile Rd.
Sterling Heights MI 48314
Tel: 810-254-1000

V06383 Panduit Corp.
17301 Ridgeland
Tinley Park IL 60477-3048
Tel: 708-532-1800

V06848 Allied Signal Inc.
Control and Accessories
DBA Allied Signal Aerospace Co.
717 N. Bendix Dr.
South Bend IN 46620
Tel: 219-231-3000

V07038 The Bendix Corp.
Bendix Aerospace Systems Div.
1300 E Joppa Rd.
Baltimore MD 21204-5917

V07187 Honeywell Inc. Defense Avionics
System Div.
9201 San Mateo Blvd. NE
Albuquerque NM 87113-2227
Tel:505-828-5000

V07213 Allied Signal Aerospatiale Canada Inc.
200 Marcel Laurin Blvd.
Montreal QC H4M 2L5
Tel: 514-744-2811
Fax: 514-342-3795

V07214 Canadian Admiral Corp. Ltd.
Port Credit ON L5G 4M5

V07216 Rockwell International of Canada Ltd.
Collins Canada Div.
Toronto ON M4A 1C7

V07217 Allied Signal Aerospace Canada
255 Atwell Dr.
Rexdale ON M9W 6L7
Tel:416-675-1411

V07222 Weatherhead Co. of Canada Ltd.
St-Thomas ON

V07693 Burndy Corp. Inc.
1530 Birchmount Rd.
Scarborough ON M1P 2G9
Tel: 416-757-8761

V07700 Technical Wire Products
129 Dermody St.
Cranford NJ 07016-3217
Tel: 908-272-5500

V07797 Rocker Solenoid Co.
DBA Rocker Industries
1500 W 240th St.
Harbor City CA 90710-1309
Tel: 310-534-5660

V08179 Garrett Turbocharger Div.
Garret Group Automotive Sector
Allied Signal Inc.
3201 W Lomita Blvd.
Torrance CA 90505-5064
Tel: 213-517-1427

V08342 Bendix Automotive of Canada Ltd.
Windsor ON

V08376 Johns-Manville Canada Ltd.
Mississauga ON

V08419 Devilbliss Air Compressor Products
Div. of ITW Canada Inc.
50 Wood St.
P.O. Box 5800
Barrie ON L4M 6K3
Tel: 705-728-5657

V08420 Bell and Howell Canada Ltd.
Document Management Products
360 Hanlan Rd.
Woodbridge ON L4L 8V6
Tel: 416-746-2200

V08471 Senior Flexonics of Canada Ltd.
134 Nelson St. W.
Brampton ON L6V 2M2
Tel: 416-451-1250

V08479 Garlock of Canada Ltd.
Mechanical Packing Div.
2860 Plymouth Dr.
Oakville ON L6H 5S8
Tel: 416-829-3200

V08484 Trans Technology Corp.
Breeze-Eastern Div.
700 Liberty Ave.
Union NJ 07083-8107
Tel: 908-686-4000

V08748 Eldec Corp.
16700 13Th Ave. W
P.O. Box 97027
Lynnwood WA 98046-9727
Tel: 206-743-1313

V09049 Custom Control Sensors Inc.
21111 Plummer St.
Chatsworth CA 91311-2516
Tel: 818-341-4610

V09479 Aeroquip (Canada) Ltd.
Toronto ON

V09482 Amp of Canada Ltd.
20 Esna Park Dr.
Markam ON L3R 1E1
Tel: 416-475-6222

V09487 Canadian Curtiss-Wright Ltd. 1815
Sismet Rd.
Mississauga ON L4W 1P9
Tel: 416-625-6557

V09512 Jeffrey Mfg. Co. Ltd.
Div. Of Dresser Canada Inc.
300 St. Patrick St.
P.O. Box 700
Ville La Salle QC H8R 3Y4
Tel: 514-366-2550

V09543 Kidde, Walter, and Company of Canada Ltd.
Toronto ON

V09569 Duracell Inc.
2333 N. Sheidan Way
Mississauga ON L5K 1A7
Tel: 416-823-4410

V09581 3M Canada Inc.
1849 Oxford St. E.
P.O. Box 5757 Terminal A
London ON N6A 4T1
Tel: 519-451-2100

V09698 Snap-On Tools of Canada Ltd.
Product Services and Distribution
150 Caldari Rd.
Concord ON L4K 4L1
Tel: 416-660-2505

V09708 Honeywell Ltd. Aerospace Div.
3 Hamilton Ave. N.
P.O. Box 3160 Sta. C
Ottawa ON K1Y 4J4
Tel: 613-728-4681

V09736 TRW Canada Inc.
United-Carr Div.
455 Arvin Ave.
P.O. Box 500
Stoney Creek ON L8E 2N2

V09819 Canadian General Electric Co. Ltd.
Apparatus Dept.
107 Park St. N.
Peterboro ON

V09959 Aircraft Instruments Co.
4039 Skydr on Dr.
Doyles Town PA 18901-1121
Tel: 215-348-5274

V11065 ITT Fluid Produ cts Canad a
55 Royal Rd.
Guelph ON N1H 1T1
Tel: 519-821-1900

V11066 Goodyear Canada Inc.
10 Four Seasons PL 9th Floor
Etobicoke ON M9B 6G2
Tel: 416-626-4611
Fax: 416-620-8393

V11707 Ideal Precision Meter Co.
214 Franklin St.
Brooklyn NY 11222-1302
Tel: 718-383-6904

V12116 Talley Defence System Inc.
Talley Industries Inc.
3500 N Greenfield Rd.
P.O. Box 849
Mesa AZ 85211-0849
Tel: 602-898-2200

V12282 Carleton Life Support
Technologies Inc.
1-1200 Aerowood Dr.
Mississaug a ON L4W 2S7
Tel: 905-629-3245

V12288 Velcro Canada Ltd.
114 East Dr.
Bramela ON L6T 1C1
Tel: 416-791-1630

V12305 The Thompson H I Co.
10 Kingsmill Ave.
P.O. Box 906
Guelph ON N1H 6M6
Tel: 519-822-6630

V13103 Thermalloy Co.
2021 W. Valley View Lane
P.O. Box 81039
Dallas TX 75381
Tel: 214-243-4321

V13499 Rockwell Intl. Corp.
Collins Avionics
350 Collins RD NE
Cedar Rapids IA 52498
Tel: 319-395-1000

V14736 General Electric Co.
Aircraft Instrument Dept.
50 Fordham Rd.
Wilmington MA 01887-2146
Tel: 617-937-4951

V15605 Eaton Corp. Operation and
Techn ical Ctr.
4201 N. 27th St.
Milwaukee WI 53216-1807
Tel: 800-386-1911

V15840	Danl y Machi ne Speci altie s Inc. 2100 S. Laramie Ave. Chicago IL 60650-2363 Tel: 312-242-1800
V16258	Space-Lok Inc. 2526 N. Ontario Burbank CA 91504-2512 Tel: 213-849-6751
V16688	Dejur Meter Div. of Ideal Precision Meter Co. Inc. Brooklyn NY
V16875	Smithkline Instruments Co. Sub. of Smithkline Beckman Corp. 880 W Maude Ave. 61947 Sunnyvale CA 94086-2920
V17039	Ex-Cell-O London Canada London ON
V17900	Chris Aire Inc. 4401 San Fernando Rd. Glendale CA 91204-2206
V21335	Torrington Co. Fafnir Bearing Div. 59 Field St. Torrington CT 06790-4942 Tel: 203-482-9511
V21573	Bell and Howell Canada Ltd. Weston ON M9L 2X5
V 22040	Felsenthal Instruments Co. Chicago IL
V24931	Specialty Connector Co. 2100 Earlywood Dr. P.O. Box 547 Franklin IN 46131 Tel: 317-738-2800
V26044	New Haven Mfg. Corp. Gar-Kenyon Control Div. 446 Blake St. New Haven CT 06515-1238 Tel: 203-387-2572
V26344	New Haven Mfg. Corp. 446 Blake St. New Haven CT 06515-1238 Tel: 203-397-3311
V27016	Handley Industries Inc. 2101 Brooklyn Rd. P.O. Box 863 Jackson MI
V28856	Telex Communications Inc. Sub. of Telex Corp. 9600 Aldrich Ave. S Minneapolis MN 55420-4210 Tel: 612-887-7403
V29372	Fairchild Industries Inc. Fairchild Aerospace Fastener Div. 3000 W Lomita Blvd. Torrance CA 90505-5103 Tel: 310-530-2220
V29666	Huck Manufacturing Co. Sub. of Federal-Mogul Corp. Irvine CA
V31435	Lucas Aerospace Power Equipment Corp. 777 Lena Dr. Auror a OH 44202 Tel: 216-995-1000
V32245	Aerospace Optics Inc. 3201 Sandy Ln. Fort Worth TX 76112-7203 Tel: 817-451-1141
V35013	Hawker Siddely Canada Inc. Orenda Div. 3160 Derry Rd. E. Mississauga ON L4T 1A9 Tel: 905-673-4041
V35043	Wire Rope Industries Ltd. 5501 Trans-Canada Hwy. Pointe-Claire QC HR9 1B7 Tel: 514-426-6483
V35076	Aircraft Appliances and Equipment Ltd. 150 East Dr. Bramalea ON L6T 1C1 Tel: 905-791-1666
V35289	Dominion Wire Rope Co. Ltd. Lachine QC
V35344	Leach Relay Co. Div. of Leach Corp. Los Angeles CA
V35351	Smith Industries Aerospace and Defense System Inc. Grand Rapid Div. 4141 Eastern Ave. S.E. Grand Rapids MI 49518-8727 Tel: 616-241-7000

V35610	Textron Canada Ltd. Camcar Div. 15 Clarence St. Gananoque ON K7G 2C5 Tel: 416-675-5530
V35876	Leigh Instruments Ltd. O and W Panel Dept. Carleton Place ON
V35918	Coltec Industries Inc. DBA Lewis Engin eerin g Co. 238 Water St. P.O. Box 231 Naugatuck CT 06770-0231 Tel: 203-597-6900
V35934	Canrep Ltd. Div. of Canron Ltd. Montreal QC
V35962	Messier-Dowty Inc. 574 Monarch Ave. Ajax ON L1S 2G8 Tel: 416-683-3100
V35972	Godfrey Aerospace Inc. 70 Hymus Blvd. Pointe -Claire QC H9R 1C9 Tel: 514-426-4300
V35993	Rawplug Canada Ltd. 7407 Bren Rd. Mississauga ON L4T 1H3 Tel: 905-673-7293
V36123	Digipath Video Inc. Formerly Central Dynamics Ltd. 147 Hymus St. Pointe Claire QC H8R 1G1 Tel: 514-697-0224
V36135	Bell Canada Business Office 1050 Beaver Hall Montreal QC H3C 3G4
V36164	Heroux Inc. 755 Thurber Ave. Longe uil QC J4H 3N1
V36452	Spar Aerospace Ltd. 115 Emily St. Carleton Place ON K7C 4J5 Tel: 613-592-3430
V36536	Simmonds Precision Products Inc. Long Island City NY
V36659	Lockheed-California Inc. Div. of Lockheed 2555 N. Hollywood Way Burbank CA 91520
V36673	Canadian Flight Equipement Co. Ltd. Trenton ON
V36718	Patlon Aircraft and Industries Ltd. 5502 Thimberlea Blvd. Mississauga ON L4W 2T7 Tel: 905-624-5572 Fax: 905-624-0975
V36790	DRG Sello Tape Div. of DRG Ltd. Toronto ONT
V37473	Aerospace Maintenance Development Unit CFB Trenton Astra, ONT, KOK 1BO Tel: 613-965-2797
38501	Robin Aerospace Product Ltd 6205 Airport Rd Mississauga ONT L4V 1E1
V44655	Ohmite Mfg. Co. 3601 W. Howard St. Skokie IL 60076-4014 Tel: 708-675-2600
V45402	Pacific Scientific - HTL/KIN Tech. Div. 22715 Savi Ranch Pky. P.O. Box 87019 Yorba Linda CA 92686-7019 Tel: 714-283-0283
V45681	Parker-Hannifin Corp. HQ 17325 Eucli d Ave. Cleveland OH 44112-1290
V50599	Crane Resistoflex Co. 2575 W 5th St. Jacksonville FL 32254 Tel: 904-389-3400
V50999	Jetco Inc. 2801 N. 37th Ave. Phoen ix AZ 85009-1341 Tel: 602-269-5971
V53655	Scot t Aviat ion Corp. Div. Figgie International Inc. 225 Erie St. Lancaster NY 14086-9502 Tel: 716-683-5100

V53750	Seaboard Electronic Corp. Div. of Stelma Inc. Wallingford CT
V56257	Helicoflex Co. Components Div. 2770 The Blvd. Columbia Industrial Pk. 9889 Columbia SC 29290 Tel: 803-783-1880
V56878	SPS Technologies Inc. Aerospace and Industrial Products Div. Highland Ave. Jenkintown PA 19046-2299 Tel: 215-572-3000
V57378	Lockheed Corp. 4500 Park Granada Blvd. Woodland Hills CA 91399 Tel: 818-876-2000
V57733	Stewart-Warner Instrument Corp. 580 Slawin Ct. Mount Prospect IL 60056-0200 Tel: 708-803-0200
V58918	Aerospace Control Products Inc. 1314 W. 76th St. Davenport IA 52806-1305 Tel: 319-391-6051
V58982	Precision Connector Designs Cente nnial Park 2 Techn ology Dr. Peabody MA 01960 Tel: 508-532-8800
V60674	Microwave Devices Inc. 399 State St. Franklin IN 46131-2556 Tel: 317-736-8833
V61349	Amet ex/US Gauge 900 Clyme r Ave. Sellersville PA 18960-2625 Tel: 215-257-6531
V61463	Uniroyal Chemical Co. Inc. World HQ Oxford Management and Reasearch Ctr. Benson Rd. Middl ebury CT 06762 Tel: 203-573-2000
V61564	Aero quip Canada Inc. 1305 Magurette St. Montreal QC H4N 1G9
V61864	TRW Assemblies and Fasteners Group Cleveland OH
V61957	USM Corp. Sub. of Emhart Industries Inc. Boston MA
V62793	BMF Energy Products Corp. 1400 Villa ge Way Santa Ana CA 92705-4715 Tel: 714-250- 1010
V63590	SPC Technology Div. of Primer Industrial Corp. 4801 N. Ravenswood IL 60640-4496 Tel: 312-784-5100
V65301	Pennwalt Corp. S.S. White Equipment Div. New York NY
V67074	Elco Gear Corp. 7500 S. Garfield Ave. Bell Gardens CA 90201-4894 Tel: 213-927-1469
V69705	Aeroquip Corp Industrial Product Group 1695 Indian Wood Cir 700 Maumee OH 43537-0700 Tel: 419-891-7670
V70152	UOP Instrument Div. of Universal Oil Products Co. Greenwich CT
V70192	Gorn Div. of Gap Instrument Corp. 110 Marcus Blvd. Hauppauge NY 11787
V70210	Allied Signal Inc. DBA Allie d Signa l Aeros pace Co. Aireshearch Los Angeles Div. 2525 W. 190th St. Torrance CA 90509-2960 Tel: 310-323-9500
V70417	Chry sler Corp. Amplex Div. 6565 E. Eight Mile Rd. Warre n MI 48091-2949 Tel: 313-497-9091
V70563	Ampe rite Co. 600 Palisades Ave. Union City NJ 07087-5259

V70628 Vesper Corp.
Arrow Products Div.
4411 Katel la Ave.
Los Alamitos CA 90720-3514
Tel: 714-828-7770

V70677 Auld D.L. Co.
6th Ave. and Fifth St.
Columbus OH

V71286 Fairchild Corp. Camloc Products Div.
3012 W Lomita Blvd.
Torra nce CA 90505
Tel: 310-784-2600

V71310 The Carbone USA Corp.
400 Myrtle Ave.
Boonton NJ 07005-1839
Tel: 201-334-0700

V71400 Cooper Industries Inc.
Bussman Div.
114 Old State Rd.
Ellisville MO 63021-5942
Tel: 314-394-2877

V71468 ITT Corp.
ITT Canon Div.
666 E. Dyer Rd.
Santa Ana CA 92702
Tel: 714-557-4700

V71688 Northern Telecom Inc.
Cook Electric Div.
Morton Grove IL 60053

V72619 Dialight Corp.
Brooklyn NY 11200

V72653 G. C. Electronics Co.
Sub. of Household International Corp.
1801 Morgan St.
P.O. Box 1209
Rockford IL 61105- 1209

V72794 Dzus Fastener Co. Inc.
425 Union St.
West Islip NY 11795-3123
Tel: 516-669-0494

V72914 Grimes Aerospace Co.
550 State Rt. 55
P.O. Box 247
Urbana OH 43078-9482
Tel: 513-652-1431

V72962 Harvard Industries Inc.
2502 N Rocky Point Dr. Suite 960
Tampa FL 33607
Tel: 813-288-5000

V7 3134 IMO Industries Inc.
Heim Universal Div.
60 Round Hill Rd.
P.O. Box 430
Fairf ield CT 06430-0430
Tel: 203-255-1511

V73168 Kidd e Techn ologi es Inc.
Fenwall Safety System Div.
700 Nicke rson Rd.
Marlborough MA 01752
Tel: 508-481-5800

V73760 ITT Aerospace Control Div.
1200 S. Flower St.
Burbank CA 91502-2023

V74063 Figgie Intl. Inc.
Hartman Electrical Mfg. Div.
175 N. Diamond St.
P.O. Box 8
Mansfield OH 44902-1004
Tel: 419-524-1411

V74144 Cam-Stat Inc.
Los Angeles CA 90000

V 74868 Amphenol Corp. RF/Microwave Opns.
1 Kennedy Ave.
Danbury CT 06810-9272

V75042 TRW Inc.
TRW Elect ronic Components
IRC Fixed Resistors Philadelphia Div.
Philadelphia PA

V75165 Schuller Intl. Inc.
717 17th St.
Littl eton CO 80127
Tel: 303-978-5211

V75237 Kayn ar Techn ologi es Inc. Micro dot Div.
Aerospace Fastening System Group
190 Crowt her Ave.
Placentia CA 92670
Tel: 714-870-6650

V75595 Swedlow Inc.
Liberty Mirror Div.
851 Third Ave.
Brackenbridge PA 15014
Tel: 412-224-1800

V75829 Libbey-Owens-Ford Co.
811 Madison Ave.
Toledo OH 43624
Tel: 419-247-3731

V76374 Mechanical Products Inc.
Sub. of Spreckles Inc.
1824 River St. 729
Jackson MI 49204

V76381 Minnesota Mining and Mfg. Co.
3M Ctr.
St-Paul MN 55144-1000
Tel: 612-737-4114

V76487 Millen, James, Mfg. Co. Inc.
Malden MA 02148

V76689 National Screw and Mfg. Co.
Santa Monica CA

V76691 National Telephone Supply Co.
5100 Superior Ave.
Cleveland OH 44103-1240
Tel: 216-361-0221

V76786 North & Judd Mfg. Co.
699 Middle St.
Middletown CT 06457-1524
Tel: 203-632-2600

V76906 Operating & Maintenance
Specialties Co.
130 South Side Dr.
P.O. Box 11515
Charlotte NC 28217
Tel: 704-523-4031

V77326 Pollack, Joseph, Corp.
195 Freeport St.
Boston MA 02122-2827

V77820 Amphenol Corp.
Amphenol Aerospace
40-60 Delaware St.
Sidney NY 13838-1395
Tel: 607-563-5011

V77896 Rexn or Corp. Bearing Opns.
2400 Curtiss St.
Downers Grove IL 60515-4005
Tel: 312-969-1770

V77969 Rubbercraft Corp. of California Ltd.
15627 S. Broadway
Guardena CA 90248
Tel: 310-328-5402

V78189 Illinois Tool Wks. Inc.
Shakeproof Div.
St-Charles Rd.
Elgin IL 60120
Tel: 708-741-7900

V78533 Tinnerman Products Inc.
P.O. Box 6688 Dept. 16
Cleveland OH

V78553 Eaton Corp
Engineered Fasteners Div
14701 Detroit Ave.
Lakewood OH
44107-4101

V78570 Titeflex Corp. Sub of Bundy Corp.
603 Hendee St.
P.O. Box 90054
Springfield MA 01139
Tel: 413-739-5631

V78702 Delhi-Solac Inc.
Taco Communications Antenna Div.
5512 Bearcreek Dr.
Mechanicsburg PA 17055
Tel: 717-975-0885

V78710 Teleflex Inc.
Aerospace Div.
205 Church Rd.
P.O. Box 2100
North Wales PA 19454
Tel: 215-699-4861

V79326 IMO DeLaval Inc.
Wiggins Connectors Div.
5000 Triggs St.
P.O. Box 22228
Los Angeles CA 90022-4833
Tel: 213-881-7607

V80058 Joint Electronics Type Designation
System

V80099 Edison Instrument Div. of
McGraw-Edison Co.
West Orange NJ 07052

V80234 Vapor Corp. Sub. of Brunswick Corp.
6420 W. Howard St.
Miles IL 60174-3302
Tel: 708-967-8300

V80249 Hazeltine Corp.
Cuba Hill Rd.
Greenlawn NY 11740-9985
Tel: 516-262-8222

V80477 Adams Rite Sabre Intl.
540 W. Chevy Chase Dr.
Glendale CA 91204
Tel: 818-241-5121

V80647 Textron Inc.
40 Westminster St.
Providence RI 02903-2525
Tel: 401-421-2800

V80795 ITT Corp.
320 Park Ave.
New York NY 10022-6815
Tel: 212-258-1000

V81039 GEC-Marconi Aerospace Inc.
110 Algonquin Pkwy.
Whippany NJ 07981-1640
Tel: 201-428-9898

V81312 Winchester Electronics Div. of
Litton Systems Inc.
400 Park Rd.
Watertown CT 06795-1612
Tel: 203-945-5000

V81349 Military Specifications

V81376 Southwest Products Co.
2240 Buena Vista St.
Irwindale CA 91706
Tel: 818-348-0181

V81574 TCE Canada Ltd.
4-60 Baffin Pl.
Waterloo ON N2V 1Z7
Tel: 519-747-9227

V81640 Eaton Corp. Aerospace and Commercial
2250 Whitfield Ave. E 4095
Sarasota FL 34243
Tel: 941-751-7112

V81839 Carma Mfg. Co.
Torrance CA 90500

V81840 Lucas Ledex Inc.
801 Scholz Dr.
P.O. Box 427
Vandalia OH 45377-0427
Tel: 513-898-3621

V81901 Control Products Inc.
280 Ridgedale Ave.
East Hanover NJ 07936-2394
Tel: 201-887-9400

V81982 Hydro-Aire
Div. of Crane Co.
3000 Winona Ave.
P.O. Box 7722
Burbank CA 91510
Tel: 818-842-6121

V82152 Datron/Transco Inc.
200 W. Los Angeles Ave.
Simi Valley CA 93065
Tel: 805-584-1717

V82267 Schulz Tool and Mfg. Co.
San Gabriel CA

V82647 Texas Instruments Inc.
Control Prod. Div. M/S 12-33
34 Forest St.
Attleboro MA 02703-0964
Tel: 508-236-3800

V82768 Phillips-Advance Control Co. Div. of
Phillips-Eckart Electronic Corp.
Joliet IL

V82829 Allen Aircraft Products Inc.
6168 Woodbine Ave.
P.O. Box 1211
Ravenna OH 44226-1211
Tel: 216-296-9621

V82831 Rexnor Inc.
Specialty Fastener Div.
Santa Ana CA

V83014 Hartwell Corp.
900 S. Richfield Rd.
Placentia CA 92670-6732
Tel: 714-993-4200

V83086 New Hampshire Ball Bearings Inc.
Rt. 202
Peterborough NH 03458
603-924-3311

V83326 Safe Flight Instrument Corp.
20 New King St.
P.O. Box 550
White Plains NY 10602
Tel: 914-946-9500

V83564 Wemac Div. of Puritan-Bennet
Aerosystems Co.
18475 Pacific St.
Fountain Valley CA 92708-7004

V83624 Uniroyal Inc.
Uniroyal International Div.
Oxford Management and Research Ctr.
Benson Rd.
Middleburry CT 06762
Tel: 203-573-2000

V83646 Gabb Special Products Div. of Connecticut International Corp.
Windsor Locks CT

V84256 Avibank Mfg. inc.
210 S. Victory Blvd.
P.O. Box 391
Burbank CA 91503
Tel: 818-843-4330

V84685 Hydra-Power Corp. Div. of Teledyne Inc.
10-12 Pine Ct.
New Rochelle NY 10801
Tel: 914-632-2200

V84971 TA Mfg. Corp.
Sub. of Criton Technologies
375 W. Arden Ave.
P.O. Box 2500
Glendale CA 91209-2500
Tel: 818-240-4600

V88063 Collins Radio Co.
Components Div.
Santa Ana CA

V88308 Bombardier inc.
Canadair
400 Cote Vertu Rd. W.
Dorval QC H4S 1Y9
Tel: 514-855-5000

V88821 Ransome and Marles Bearing Co. Ltd.
Newark-on-Trent
Nottingham England

V89305 Simmonds Precision Products Inc.
100 Panton Rd.
Vergennes VT 05491-8801
Tel: 802-877-2911

V89944 Sequa Corp.
Kollsman Div.
220 Daniel Webster Hwy. S.
Merrimack NH 03054-4809
Tel: 603-889-2500

V89954 Martin Marietta Corp. Control Systems
600 Main St.
Johnson City NY 13790-1888
Tel: 607-770-2043
Binghampton NY

V90073 Canadian Marconi Corp.
2442 Trenton Ave.
Montreal QC H3P 1Y9
Tel: 514-748-3148

V90095 Technitrol Inc.
1952 E Allegheny Ave.
Philadelphia PA 19134
Tel: 215-426-9105

V91511 Auto-Valve Inc.
1707 Geunther Rd.
Dayton OH 45427-3244
Tel: 513-854-3037

V91637 Dale Electronics Inc.
1122 23rd St. 609
Columbus NE 68602-0609
Tel: 402-563-6291

V91767 Heli-coil Corp.
Danbury CT

V91812 Janco Corp.
3111 Winona Ave.
Burbank CA 91504
Tel: 818-846-1800

V91816 Circle Seal Controls Inc.
a Watt Industries Inc. Co.
2301 Wardlow Cir.
P.O. Box 3300
Corona CA 91720
Tel: 909-270-6200

V91836 Kings Electronic Co. Inc.
40 Marbledale Rd.
Tuckahoe NY 10707-3420
Tel: 914-793-5000

V91929 Honeywell Inc. Micro Switch Div.
11 W Spring St.
Freeport IL 61032
Tel: 800-537-6945

V92003 Parker Aircraft Corp.
Parker-Bertea Aerospace Group HQ
18321 Jamboree Blvd.
P.O. Box C-19510
Irvine CA 92713
Tel: 714-833-3000

V92215 Fairchild Industries Inc.
Fairchild Aerospace Fastener Div.
3010 W. Lomita Blvd.
Torrance CA 90505-5102
Tel: 310-784-6444

V92541 Custom Craft Products Inc.
3000-A Airway Ave.
Costa Mesa CA 92626
Tel: 714-957-6308

V92798 Shuller Intl. Inc.
Manville Specialty Insulation Div.
2730 Industrial Pky.
Elkhart IN 46516
Tel: 219-296-3522

V92830 Associated Spring Barnes Group Inc.
18 Main St.
Bristol CT 06010-6527
Tel: 203-582-9581

V93332 Sylvania Elec. Prod. Inc.
Semiconductor Prod. Div.
Woburn MA

V93988 Zerillo Products Inc.
525-529 Glenmore Ave.
Brooklyn NY 11207-3604

V94580 Honeywell Inc.
Avionics Div./Military Sales
2600 Ridgway Pky.
Minneapolis MN 55413-1719
Tel: 612-951-1000

V94581 National Utilities Co/Nuco
Div. of V I J Corp.
1700 Hickory Dr.
P.O. Box 14639
Forth Worth TX 76117-6020
Tel: 817-838-2020

V94970 Dukane Corp.
Seacom Div.
2900 Dukane Dr.
St-Charles IL 60174-3395
Tel: 708-584-2300

V94988 Cooper Industries Inc.
Wagner Lighting Div.
75 W. Main St.
Weatherly PA 18255-1099
Tel: 717-427-8261

V95712 The Bendix Corp.
Electrical Components Div.
Franklin IN 46131

V96182 Eaton Corp. Aerospace and Commercial
Controls Div. Msc. Products
1640 Monrovia Ave.
P.O. Box 1920
Costa Mesa CA 92628
Tel: 714-642-2427

V96238 DNE Technologies Inc.
50 Barnes Park N 30
Wallingford CT 06492-0030
Tel: 203-265-7151

V96313 Haynes-Dana Ltd. Corporate Offices
1 St-Paul St. 3029
St-Catherines ON L2R 7K9

V96423 Gaudette Mfg. Co.
Los Angeles CA

V96744 The Ansonia Wire and Cable Co.
Ashton RI

V97393 Shur-Lock Corp.
2541 White Rd.
P.O. Box 19584
Irvine CA 92713
Tel: 714-474-6000

V97564 Pollak Corp.
Transportation Electronic Div.
11801 Miriam Dr. Suite B-1
El Paso TX 79936-7430
Tel: 915-592-5700

V97613 Sargent Controls and Aerospace
Kahr Bearing Div.
5675 W Burlingame Rd. 730
Cortaro AZ 85652-0730
Tel: 602-744-1000

V97945 Pennwalt Corp.
SS White Industrial Product Div.
Piscataway NJ

V97992 Uniroyal Goodrich Canada Inc.
59 Hymus Blvd.
Pointe-Claire QC H9R 1E2
Tel: 514-694-5220

V98429 Warmann Watch Co. Inc.
1214 Broadway Suite 406
New York NY 10001
Tel: 212-532-3898

V98625 Aeroquip Corp.
Aeroquip Aerospace Div.
Marman Plant
Los Angeles CA

V99145	Eaton Corp. Valve and Actuator Div. 2338 Alaska Ave. El Segundo CA 90245 Tel: 310-643-9938
V99321	Shaw Aero Devices Inc. 12291 Towne Lake Dr. Fort Myers FL 33913 Tel: 813-768-5644
V99333	Barber, F.F. Machinery Toronto ON
VK3105	Wearnes Hollingworth Ltd. Cambion Div. Peveril House Mill Bridge Castleton S30 2WR Yorks England 01433 620831 Yorks, England
VK7182	R H P Industrial Bearings Ltd. P.O. BOX 18 Newark Notts UK NG24 2JF
ABJ	Abercorn Aero Limited 7435 Chester Ave Montreal 16, QUE
ATC	UOP Instruments Div. of Universal Oil Product Greenwich, CT
AYG	Aviation Developments (Canada) Ltd. 2709 Yonge Street Toronto, ONT
BAC	Bendix Corporation, The Fisher Building Detroit 2, MI
CAU	Canadian Buckle Company, Ltd. 7010 Querbes Ave Montreal 15, QUE
CDL	Canada Decalomania Co., Ltd. Toronto, ONT
CTL	Carriere Technical Industries Ltd. 195 Nantucket Blvd, Scarborough, ONT
DRW	Donald Rope and Wire Cloth Ltd. 1004 Sargent Ave Winnipeg 3, MAN
DUM	Du Mont, Allen B., Lab., Inc. 760 Bloomfield Ave Clifton, NJ
FIA	Fiat Aircraft Toronto, ONT
GLP	Gladden Aircraft Prod. Corp. 635 W. Colorado Blvd Glendale 4, CA
HPL	Henry Company, The Paul 2310 S. La Cienega Street Los Angeles 34, CA
ICO	ITT Canon Electric Inc. Salem Division Pingree & Leavitt Sts Salem, MA
JAR	Jarry Hydraulics Limited 4384 St. Denis Street Montreal 18, QUE Changed to AXN (02121)
MHR	Company Limited 6277 Upper Lachine Road Montreal 28, QUE Changed to HOY (09504)
MSC	Minneapolis-Honeywell Reg. Co. Micro Switch Division 11 W. Spring Street Freeport, IL Changed to HOY (994580)
PAS	Pascal Hardware Co., Ltd., The J. 301 Craig Street W. Montreal 1, QUE
PER	Perth Metal Industries Perth, ONT
POO	Polypenco, Incorporated 2150 Fairmont Ave Reading, PA
RAU	Radium Dial Corporation 920 MacEachran Ave Montreal 8, QUE
RMB	R & M Bearings Canada Limited 1006 Mountain Street Montreal 25, QUE
SHI	Shakeproof Washer Co. Division of Illinois Tool Works Elgin, IL

STC	Metals & Controls, Incorporated Spencer Products 34 Forest Street Attleboro, MA Changed to MES (82647)
SWC	Stewart-Warner Corporation of Canada, Limited McDonald Ave Belleville, ONT
TBC	Thomas & Betts, Limited 751 Victoria Square Montreal 1, QUE
TCO	Thompson, H.I., of Canada, Ltd. 60 Johnson Street Guelph, ONT Changed to HIO (12305)

LIST 2 ABBREVIATIONS AND CONTRACTIONS

A

AAF	ARMY-AIR FORCE
AC	ALTERNATING CURRENT
ACFT	AIRCRAFT
ACTE	ACTUATING, OR
ADF	AUTOMATIC DIRECTION FINDER
ADI	ANTI DETONANT INJECTION
ADJ	ADJUSTABLE, ING, MENT
AIL.	AILERON
AMP	AMPERE
AN	AIR FORCE - NAVY
AND	ARMY-NAVY DESIGN
APU	AUXILIARY POWER UNIT
AR	AS REQUIRED
ASSY	ASSEMBLY
ASW	ANTI SUBMARINE WARFARE
ATT	ATTACHING
AUX	AUXILIARY

B

BRG	BEARING
BRKDN	BREAKDOWN
BRKT	BRACKET

C

CONN	CONNECTING, ION, OR
CON ROD	CONNECTING ROD
CTL	CONTROL
CTR	CENTRE
CYL	CYLINDER

D

D/FOG	DEFOGGING
D/FR	DEFROSTING
D/ICE	DEICER, ING
DC	DIRECT CURRENT
DEG	DEGREE
DIA	DIAMETER
DISTN	DISTRIBUTION
DWG	DRAWING

E

EFF	EFFECTIVE, ITY
ELEC	ELECTRICAL
EMP	EMPENNAGE
EMY	EMERGENCY
ENG	ENGINE
EO	ENGINEERING ORDER
EQUIP	EQUIPMENT
EXTN	EXTENDED, SION

F

FE	FIRE EXTINGUISHER, ING
FIG.	FIGURE
FM	FREQUENCY MODULATION
FREQ	FREQUENCY
FT	FOOT, FEET
FTG	FITTING
FUS	FUSELAGE
FWD	FORWARD

G

G	GRAVITY
GENL	GENERAL
G.S.M.	GOVERNMENT SUPPLIED MATERIAL
GYRO	GYROSCOPE

H

H/VENT	HEAT & VENT
HEX	HEXAGON
HF	HIGH FREQUENCY
HOR/STAB	HORIZONTAL STABILIZER
HP	HORSEPOWER
HYD	HYDRAULIC

I

(I)	INTERCHANGEABLE
ID	INSIDE DIAMETER
IDENT	IDENTIFICATION
IDI	INTEGRATED DESTINATION INDICATOR
IFF	IDENTIFICATION FRIEND OR FOE
IGN	IGNITION
IN.	INCH, ES
INBD	INBOARD
INCL	INCLUSIVE
INCORP	INCORPORATED, ING
IND	INDICATING, OR

INST	INSTRUMENT
INSTL	INSTALLATION
INTER	INTERMEDIATE

J

JB	JUNCTION BOX
JCT	JUNCTION

L

LE	LEADING EDGE
LH	LEFT HAND
LORAN	LONG RANGE NAVIGATION
LUB	LUBRICATING, ION, OR

M

MACH	MACHINE
MECH	MECHANISM
MF	MEDIUM FREQUENCY
MHF	MEDIUM HIGH FREQUENCY
MIKE	MICROPHONE
MIN	MINUTE
MISC	MISCELLANEOUS
MOD	MODIFICATION
MTG	MOUNTING

N

N/CAD	NICKEL CADMIUM
NAV	NAVIGATION, OR
NO.	NUMBER
NP	NON PROCURABLE

O

OD	OUTSIDE DIAMETER
OPR	OPERATING, OR, ION
OUTBD	OUTBOARD
OXY	OXYGEN

P

PH	PHASE
PNEU	PNEUMATIC
POSN	POSITION
PP	POWER PLANT
PRESRZTN	PRESSURIZATION
PRESS	PRESSURE
PYRO	PYROTECHNIC

R

R	RADIUS
(R)	REPLACEABLE
RCVR/XMTR	RECEIVER TRANSMITTER
REF	REFERENCE
REINF	REINFORCING, MENT
REL	RELEASE
REQD	REQUIRED
RF	RADIO FREQUENCY
RH	RIGHT HAND
RHEO	RHEOSTAT
RTNG	RETAINING
RTNR	RETAINER
RUD	RUDDER

S

SEL	SELECTOR
SERV	SERVICE
SOL	SOLENOID
SPCL	SPECIAL
SPEC	SPECIFICATION
STA	STATION
STAB	STABILIZER
STBD	STARBOARD
STD	STANDARD
STGR	STRINGER
STIFF	STIFFENER, ING
STRUCT	STRUCTURE, AL
SUB-ASSY	SUBASSEMBLY
SUBS	SUBSEQUENT
SPRT	SUPPORT, INC
SYNC	SYNCHRONOUS, IZER, IZING
SYS	SYSTEM

T

TACAN	TACTICAL AIR NAVIGATION
TE	TRAILING EDGE

U

UHF	ULTRA HIGH FREQUENCY

UNIV	UNIVERSAL
UNIV/J	UNIVERSAL JOINT

V

V	VOLT, S
VA	VOLT AMPERE
VAC	VACUUM
VENT	VENTILATING, ION
VERT/STAB	VERTICAL STABILIZER
VHF	VERY HIGH FREQUENCY

W

W	WATT
WL	WATER LINE

X

X	BY (BETWEEN DIMENSIONS)

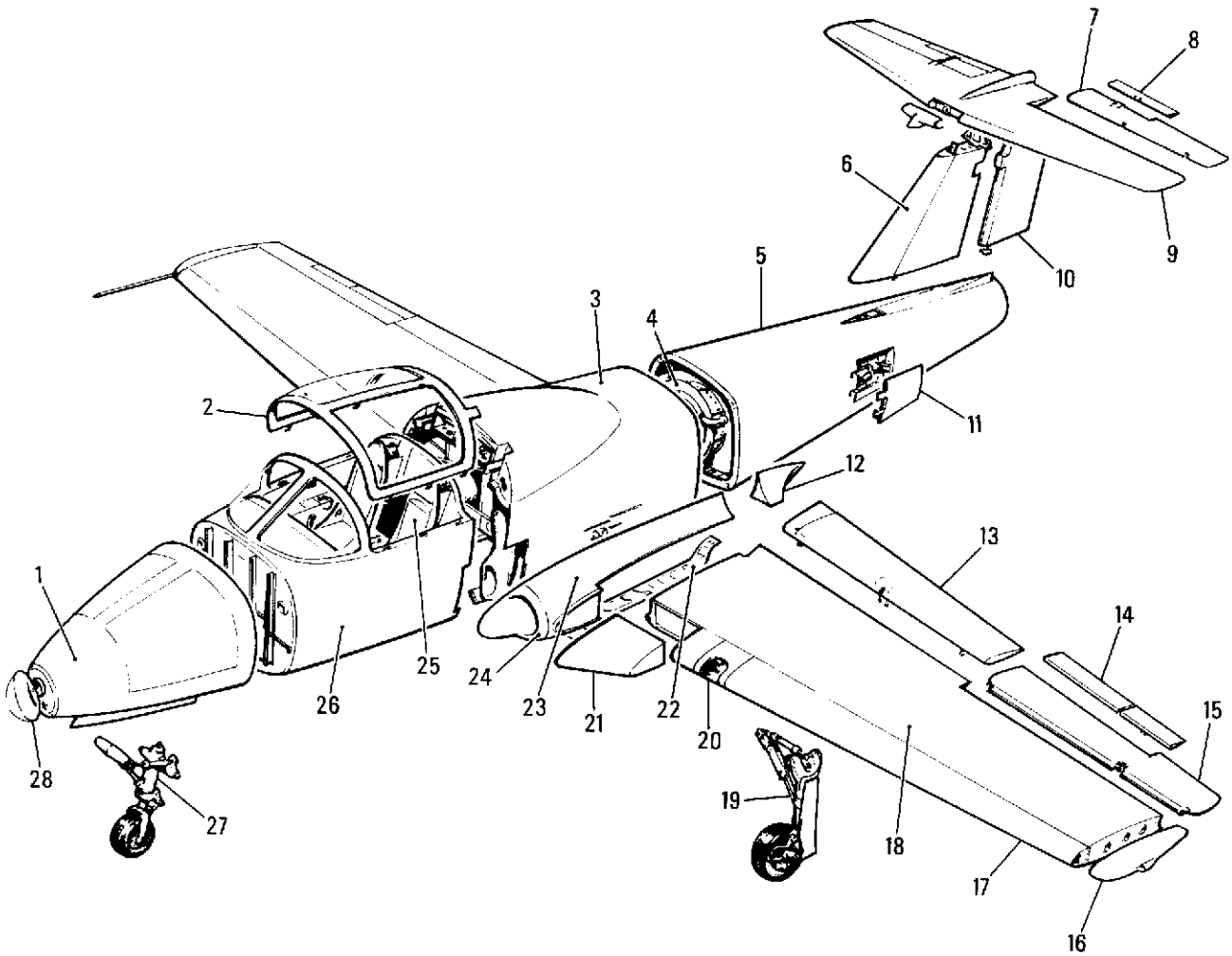

1	NOSE FUSELAGE	15	AILERON
2	COCKPIT CANOPY	16	WING TIP
3	CENTRE FUSELAGE	17	LEADING EDGE
4	POWER PLANT	18	WING BOX
5	REAR FUSELAGE	19	MAIN LANDING GEAR
6	VERTICAL STABILIZER	20	LANDING LAMP
7	ELEVATOR	21	DROOP SNOOT
8	ELEVATOR TAB	22	WING TO FUSELAGE FAIRING LOWER
9	HORIZONTAL STABILIZER	23	WING TO FUSELAGE FAIRING UPPER
10	RUDDER	24	DUCT FAIRING
11	SPEEDBRAKE	25	EJECTION SEATS
12	WING TO FUSELAGE FAIRING	26	FUSELAGE COCKPIT
13	WING FLAP	27	NOSE LANDING GEAR
14	AILERON TRIM TAB	28	TRANSPARENT NOSE

195A4A01B

CHART 1 TUTOR AIRCRAFT GENERAL ARRANGEMENT

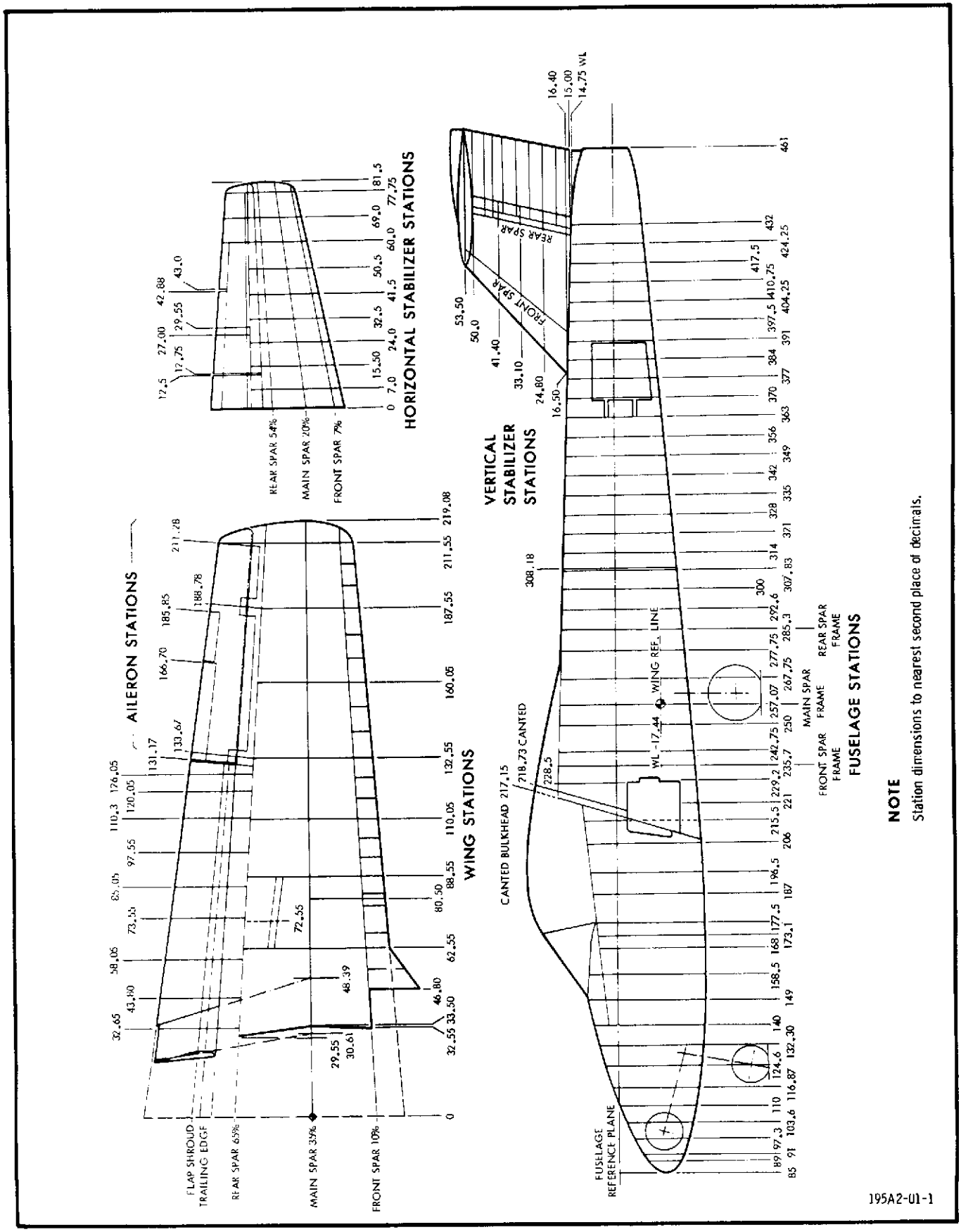

CHART 2 TUTOR AIRCRAFT STATIONS

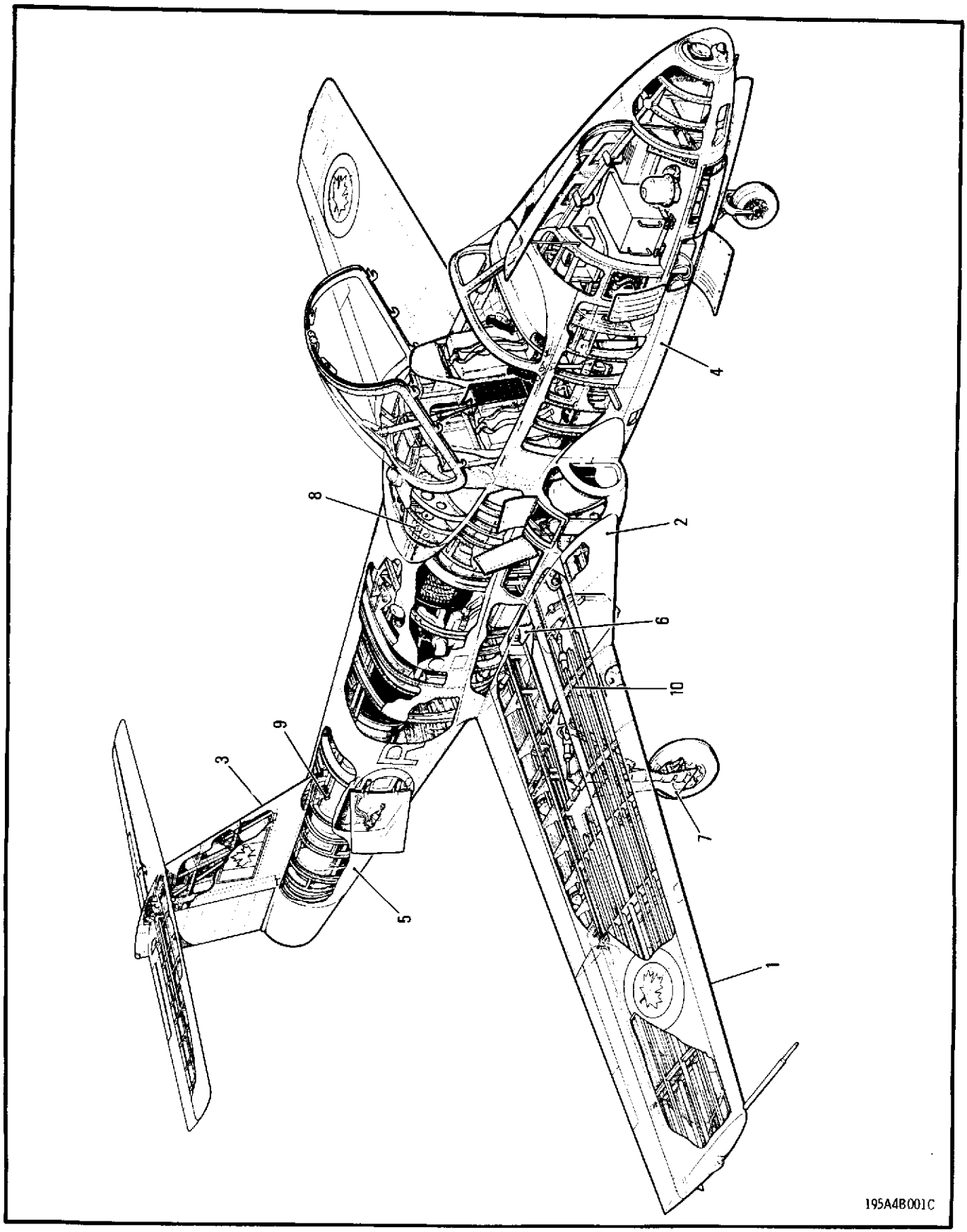

FIGURE 1 TUTOR AIRCRAFT GENERAL ASSEMBLY

FIGURE AND INDEX NUMBER	GROUP	TUTOR AIRCRAFT ASSEMBLY	EFFECTIVITY	UNITS PER ASSY
	MAJOR ASSEMBLY	TUTOR AIRCRAFT GENERAL ASSEMBLY		
	PART NUMBER	1 2 3 4 5 6 7 NOMENCLATURE		
1 -	41A-00001	AIRCRAFT GENL ASSY - COMPLETE		1
- 1	41A-10000-818	•WING GENL ASSY - COMPLETE (SEE SECTION 1)		REF
- 2	41A-35098	•FAIRING INSTL - FUSELAGE DROOP SNOOT (SEE SECTION 1)		REF
- 3	41A-20000	•EMPENNAGE GENL ASSY - COMPLETE (SEE SECTION 2)		REF
- 4	41A-35001	•FUSELAGE GENL ASSY - COMPLETE FORWARD (SEE SECTION 3)		REF
- 5	41A-36001-800	•FUSELAGE GENL ASSY - AFT(SEE SECTION 3)		REF
- 6	41A-35161	•FAIRING INSTL - FUSELAGE TO WING LOWER (SEE SECTION 3)		REF
- 7	41A-87500	•GEAR INSTL - COMPLETE LANDING (SEE SECTION 4)		REF
	41A-40200	•LOOSE EQUIPMENT INSTL - (SEE SECTION 17)		REF
- 8	41A-90004	FLIGHT CONTROLS INSTL - FORWARD FUSELAGE (SEE SECTION 7)		REF
- 9	41A-90651-800	FLIGHT CONTROLS INSTL - AILERON (SEE SECTION 7)		REF
-10	41A-90005	FLIGHT CONTROLS INSTL - AFT FUSELAGE (SEE SECTION 7)		REF

-000-

PART 2

GROUP ASSEMBLY PART LIST

SECTION 1

WING

TABLE OF CONTENTS

FIGURE	TITLE	PAGE
2	COMPLETE WING	1-02
3	COMPLETE WING BOX	1-04
4	WING BOX STRUCTURE	1-06
5	WING SKIN PANELS & FLAP SHROUD	1-10
6	AILERON SHROUD	1-14
7	DROOP SNOOT FAIRING, WING LEADING EDGE & TIP	1-16
8	WING COMPLETE FLAP	1-20
9	WING COMPLETE AILERON	1-22
10	AILERON SPRING, TRIM & GEARED TABS	1-26

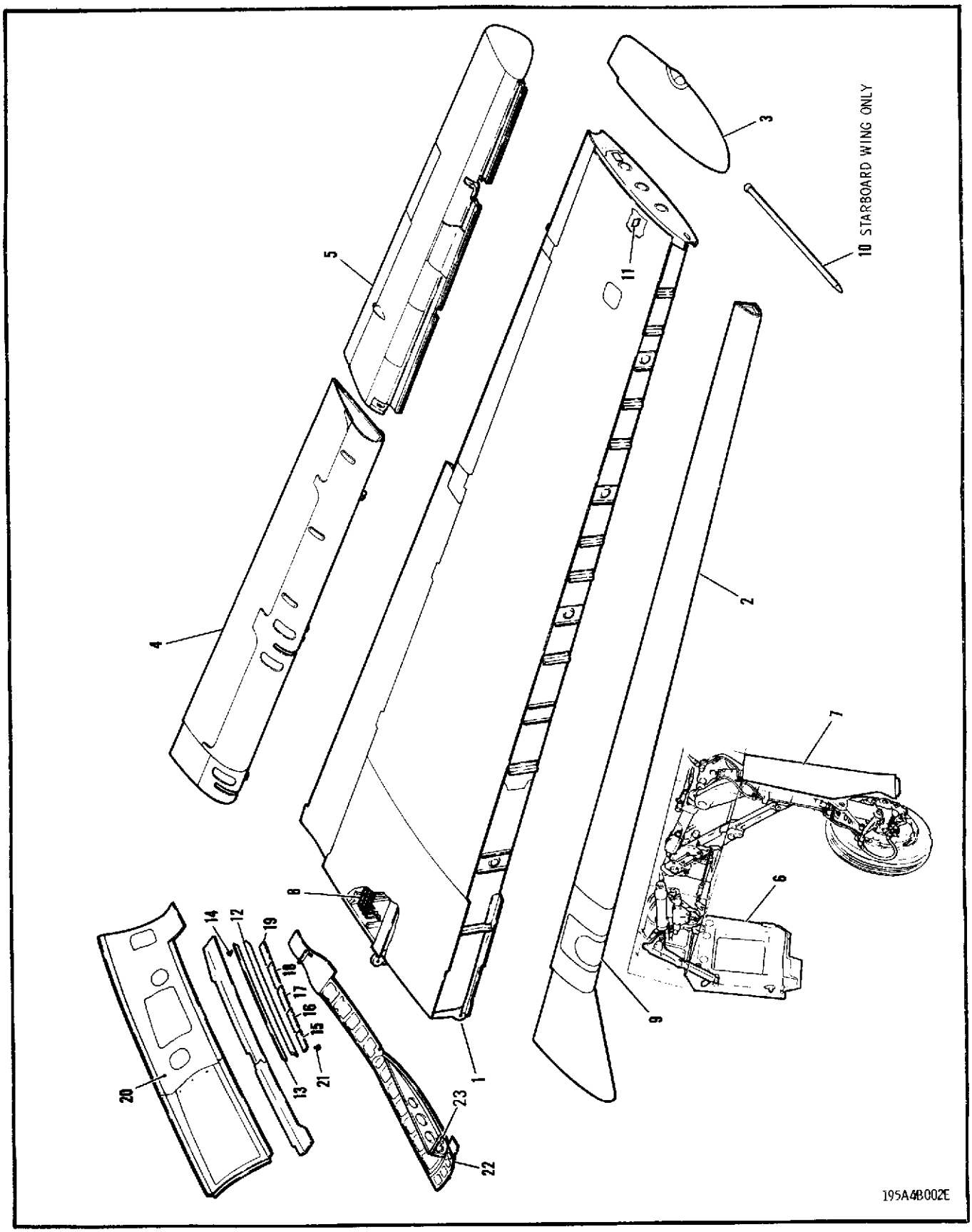

FIGURE 2 COMPLETE WING

FIGURE AND INDEX NUMBER	GROUP	WING	EFFEC-TIVITY	UNITS PER ASSY
	MAJOR ASSEMBLY	COMPLETE WING		
	PART NUMBER	1 2 3 4 5 6 7 NOMENCLATURE		
2 -	41A-10000-814	WING GENL ASSY - PORT (I)(SEE FIG. 1)		1
	41A-10000-817	WING GENL ASSY - STBD (I)		1
- 1	41A-10002-812	.BOX GENL ASSY - WING (SEE FIG. 3)		REF
- 2	41A-12100	.LEADING EDGE ASSY - WING (SEE FIG. 7)		REF
- 3	41A-11000	.TIP GENL ASSY - WING (SEE FIG. 7)		REF
- 4	41A-14000-800	.FLAP GENL ASSY - WING (SEE FIG. 8)		REF
- 5	41A-13101-812	.AILERON GENL ASSY - LH WING (SEE FIG. 9)		REF
- 6	41A-10520	.DOOR GENL ASSY - MAIN LANDING GEAR LH (SEE SECTION 4)		REF
- 7	41A-10550-804	.DOOR GENL ASSY - MAIN LANDING GEAR LEG LH (SEE SECTION 4)		REF
- 8	41A-42301	.HYDRAULIC SYS INSTL - MLG DOOR LH (SEE SECTION 8)		REF
- 9	41A-42103-58	.ELECTRICAL EQUIP INSTL - WING LE (LH) (SEE SECTION 12)		REF
-10	41A-42124-800	.PITOT STATIC SYS INSTL - WING (SEE SECTION 15)		REF
R -11	S1043	.NAMEPLATE - (V88308)		1
	41A-35160-30	.FAIRING ASSY - WING TO FUSELAGE UPPER LH		1
	41A-35160-31	.FAIRING ASSY - WING TO FUSELAGE UPPER RH		1
-12	41A-35160-54	..SEAL - WING TO FUS UPPER FAIRING LH		1
	41A-35160-55	..SEAL - WING TO FUS UPPER FAIRING RH		1
-13	41A-35160-40	..STRIP - (SEAL RETAINER LH)		1
	41A-35160-41	..STRIP - (SEAL RETAINER RH)		1
-14	NAS623-3-2	..SCREW - (SEAL RETAINING)		15
-15	41A-35160-42	..SHIM - (SKIN LAMINATED LH)		1
	41A-35160-43	..SHIM - (SKIN LAMINATED RH)		1
-16	41A-35160-44	..SHIM - (SKIN LAMINATED LH)		1
	41A-35160-45	..SHIM - (SKIN LAMINATED RH)		1
-17	41A-35160-46	..SHIM - (SKIN LAMINATED LH)		1
	41A-35160-47	..SHIM - (SKIN LAMINATED RH)		1
-18	41A-35160-48	..SHIM - (SKIN LAMINATED LH)		1
	41A-35160-49	..SHIM - (SKIN LAMINATED RH)		1
-19	41A-35160-50	..SHIM - (SKIN LAMINATED LH)		1
	41A-35160-51	..SHIM - (SKIN LAMINATED RH)		1
-20	41A-35160-32	..SKIN - WING TO FUS UPPER FAIRING LH		1
	41A-35160-33	..SKIN - WING TO FUS UPPER FAIRING RH		1
-21	NAS1203-3	..BOLT		16
-22	41A-35161-2	.FAIRING ASSY - WING TO FUS LOWER LH (R)		1
	41A-35161-3	.FAIRING ASSY - WING TO FUS LOWER RH (R)		1
-23	41A-35170-1	..RIB - FRONT SPAR LH		1
	41A-3517-2	..RIB - REAR SPAR RH		1

-000-

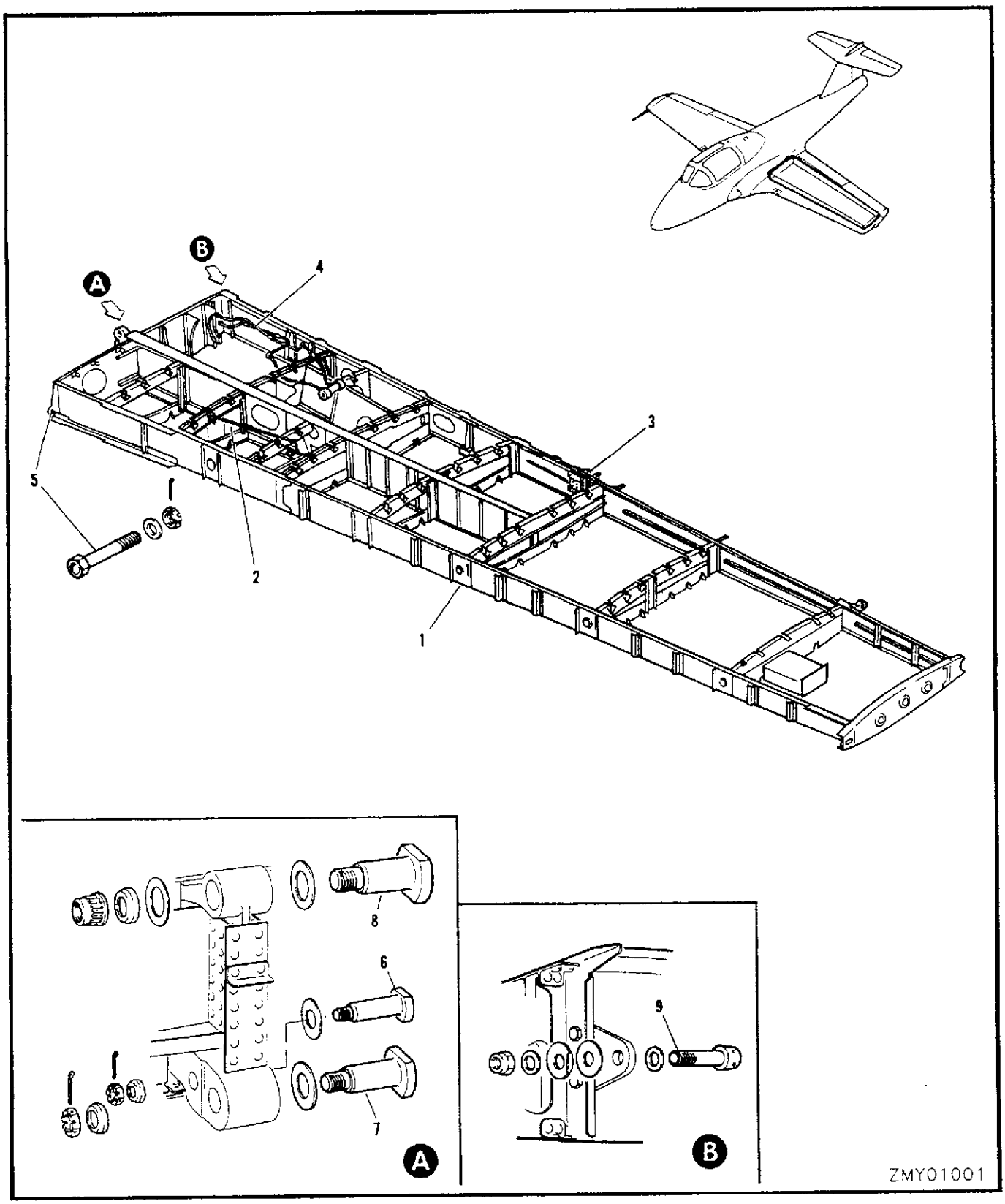

FIGURE 3 COMPLETE WING BOX

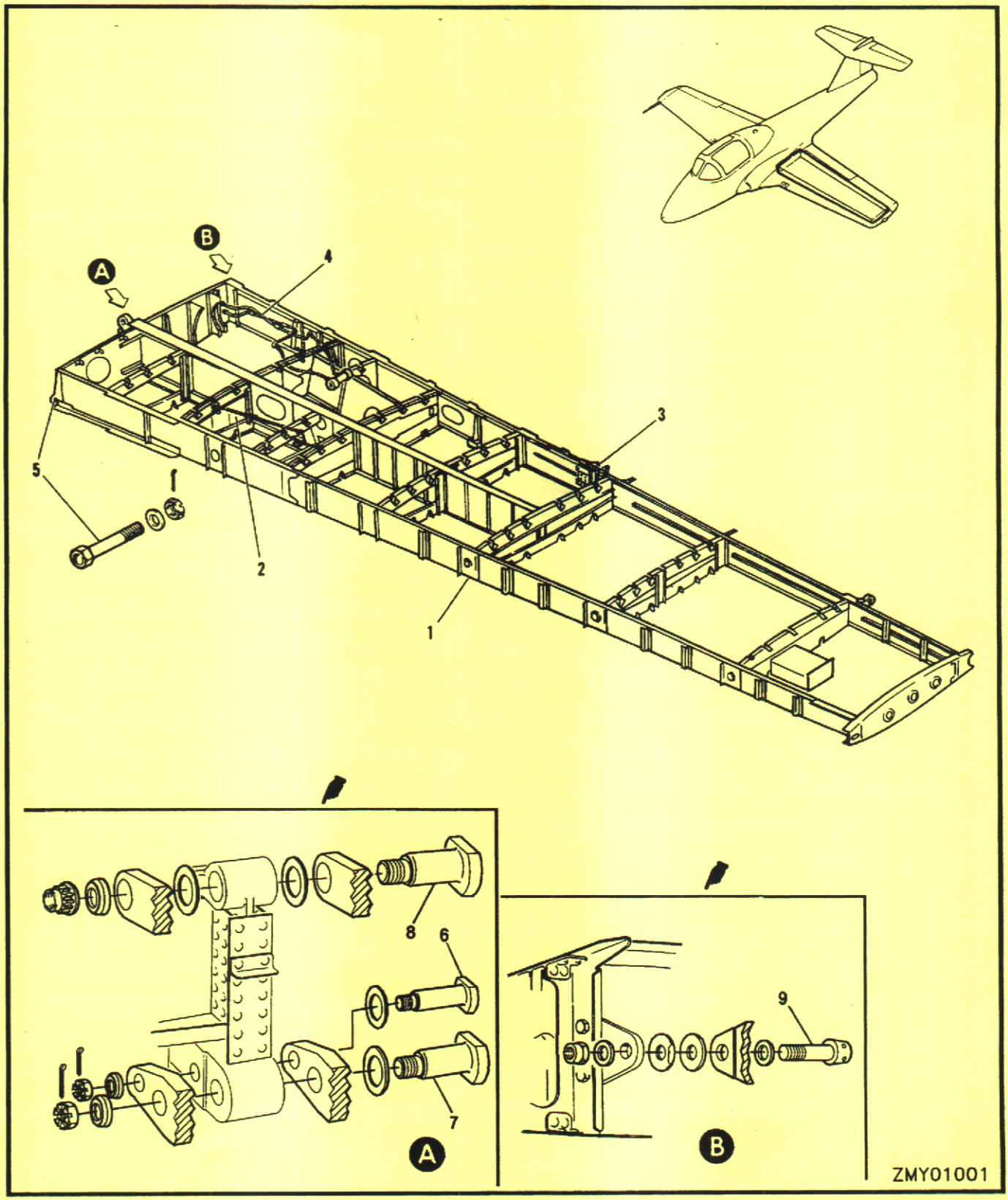

FIGURE 3 COMPLETE WING BOX

FIGURE AND INDEX NUMBER	GROUP	WING	EFFEC-TIVITY	UNITS PER ASSY
	MAJOR ASSEMBLY	COMPLETE WING BOX		
	PART NUMBER	1 2 3 4 5 6 7 NOMENCLATURE		
3 -	41A-10002-812	BOX GENL ASSY - WING PORT (INTERCHANGEABLE) (FOR SPARES ORDER 41A-10002-816) (SEE FIG. 2)		1
	41A-10002-816	BOX GENL ASSY - WING PORT (INTERCHANGEABLE) (SPARE FOR 41A-10002-812)		
	41A-10002-815	BOX GENL ASSY - WING STBD (INTERCHANGEABLE) (FOR SPARES ORDER 41A-10002-817)		1
	41A-10002-817	BOX GENL ASSY - WING STBD (INTERCHANGEABLE) (SPARE FOR 41A-10002-815)		
-1	41A-10003-810	.BOX STRUCTURE ASSY - WING (SEE FIG. 4)		REF
-2	41A-87510-800	.LATCH MECHANISM INSTL - MAIN LANDING GEAR LEG DOOR (SEE SECTION 4)		REF
-3	41A-90651-800	.AILERON CONTROL INSTL - WING (SEE SECTION 7)		REF
-4	41A-42307	.HYDRAULIC SYS INSTL - FLAP ACTUATOR (SEE SECTION 8)		REF
	41A-42103-60	.ELECTRICAL EQUIP. INSTL - WING (SEE SECTION 12)		REF
-5	NAS6209-22D	.BOLT - (WING FORWARD SPAR TO FUSELAGE)		1
R	AN960PD916	.WASHER		1
	AN320-9	.NUT		1
	MS24665-359	.COTTER PIN		1
-6	41A-10081	.BOLT - LOWER OUTBD MAIN SPAR ATTACHMENT		1
	S1246-66-45-32	.WASHER - (V88308) (UNDER BOLT HEAD)		1
	41-10018	.WASHER - LOWER MAIN SPAR ATTACHMENT		1
	AN320-12	.NUT		1
	MS24665-359	.COTTER PIN		1
-7	41A-10082	.BOLT - LOWER INBD MAIN SPAR ATTACHMENT		1
	S1246-74-49-32	.WASHER - (V88308) (UNDER BOLT HEAD)		1
	41A-10080	.WASHER - LOWER INBD MAIN SPAR ATTACHMENT		1
	AN320-14	.NUT		1
	MS24665-360	.COTTER PIN		1
-8	41A-10083	.BOLT - UPPER MAIN SPAR ATTACHMENT		1
	41A-10002-42	.SHIM - (UPPER MAIN SPAR)		AR
	41A-10002-44	.SHIM - (UPPER MAIN SPAR)		AR
	41A-10002-46	.SHIM - (UPPER MAIN SPAR)		AR
	41A-10002-48	.SHIM - (UPPER MAIN SPAR)		AR
	41A-10002-50	.SHIM - (UPPER MAIN SPAR)		AR
	41A-10002-52	.SHIM - (UPPER MAIN SPAR)		AR
	S1246-90-59-32	.WASHER - (V88308) (UNDER BOLT HEAD)		1
	41-10015	.WASHER - UPPER MAIN SPAR ATTACHMENT		1
	LHEB220-164	.NUT - (V72962)		1
-9	MS20008-18	.BOLT - (WING REAR SPAR TO FUSELAGE)		1
	MS20002C8	.WASHER - (UNDER BOLT HEAD)		1
	41A-10002-18	.SHIM		1
	41-10016	.WASHER - WING REAR SPAR TO FUS JOINT		1
	AN960-816	.WASHER		1
	MS21045-8	.NUT		1

-OOO-

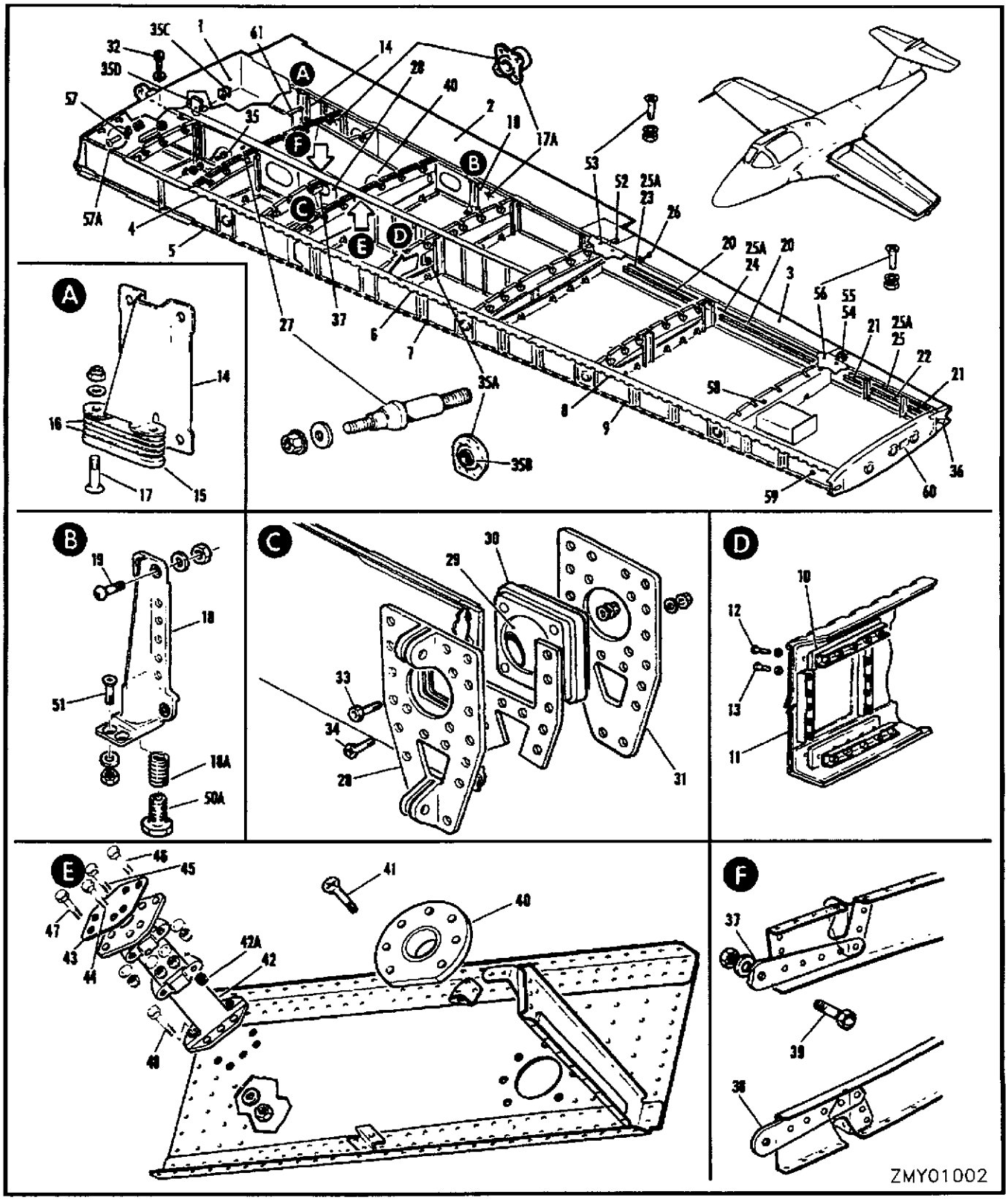

FIGURE 4 WING BOX STRUCTURE

FIGURE AND INDEX NUMBER	GROUP	WING	EFFEC-TIVITY	UNITS PER ASSY
	MAJOR ASSEMBLY	WING BOX STRUCTURE		
	PART NUMBER	1 2 3 4 5 6 7 NOMENCLATURE		
4 -	41A-10003-810	BOX STRUCTURE ASSY - WING PORT (I) (FOR SPARES ORDER 41A-10003-812) (SEE FIG. 3)		1
	41A-10003-812	BOX STRUCTURE ASSY - WING PORT (SPARE FOR 41A-10003-810)		
	41A-10003-811	BOX STRUCTURE ASSY - WING STBD (I) (FOR SPARES ORDER 41A-10003-813)		1
	41A-10003-813	BOX STRUCTURE ASSY - WING STBD (SPARE FOR 41A-10003-811)		
- 1	41A-10007	.PANEL ASSY - SKIN UPPER (SEE FIG. 5)		REF
	41A-10008	.PANEL ASSY - SKIN LOWER (SEE FIG. 5)		REF
- 2	41A-10009	.SHROUD ASSY - FLAP (SEE FIG. 5)		REF
- 3	41A-10010-800	.SHROUD INSTL - AILERON (SEE FIG. 6)		REF
	41A-10004	.SPAR ASSY - WING FORWARD PORT		1
	41A-10004-801	.SPAR ASSY - WING FORWARD STBD		1
- 4	41A-10004-72	..HALF HINGE - (SPAR UPPER PORT)		1
	41A-10004-73	..HALF HINGE - (SPAR UPPER STBD)		1
- 5	41A-10004-74	..HALF HINGE - (SPAR LOWER PORT)		1
	41A-10004-75	..HALF HINGE - (SPAR LOWER STBD)		1
- 6	41A-10004-76	..HALF HINGE - (SPAR UPPER PORT)		1
	41A-10004-77	..HALF HINGE - (SPAR UPPER STBD)		1
- 7	41A-10004-78	..HALF HINGE - (SPAR LOWER PORT)		1
	41A-10004-79	..HALF HINGE - (SPAR LOWER STBD)		1
- 8	41A-10004-80	..HALF HINGE - (SPAR UPPER PORT)		1
	41A-10004-81	..HALF HINGE - (SPAR UPPER STBD)		1
- 9	41A-10004-82	..HALF HINGE - (SPAR LOWER PORT)		1
	41A-10004-83	..HALF HINGE - (SPAR LOWER STBD)		1
-10	41A-10004-49	..PACKING - (UPPER)		1
	41A-10004-48	..PACKING - (LOWER)		1
	NAS689P7-5	..NUT		2
	NAS689P6-5	..NUT		2
-11	41A-10004-14	..COVER - (SPAR WEB APERTURE)		1
-12	NAS623-3-5	..SCREW		10
-13	NAS623-3-2	..SCREW		10
	AN960-10L	..WASHER		20
	41A-10005	.SPAR ASSY - WING REAR PORT		1
	41A-10005-1	.SPAR ASSY - WING REAR STBD		1
	REO12A004-059-6 *	..STRIP - REINFORCING		2
	MS20426DD6-9 *	..RIVET		20
	41A-10005-28	..SUPPORT ASSY - (WING STA 50 PORT)		1
	41A-10005-29	..SUPPORT ASSY - (WING STA 50 STBD)		1
-14	41A-10005-46	...SUPPORT - (WING STA 50 PORT)		1
	41A-10005-47	...SUPPORT - (WING STA 50 STBD)		1
-15	41A-10005-72	...PLATE		1
-16	41A-10005-74	...SHIM		AR
-17	MS24694-53	...SCREW		2
	AN960PD10	...WASHER		2
	MS21042L3	...NUT		2
-17A	41A-90661	..BEARING - FLANGED (AILE RON CTL REAR SPAR)		2
	41A-10046	..FITTING ASSY - WING JACKING LH		1
	41A-10046-1	..FITTING ASSY - WING JACKING RH		1
-18	41A-10046-2	...FITTING - LH		1
	41A-10046-3	...FITTING - RH		1
-18A	MS21209F8-15	...INSERT		1
-19	NAS623-3-5	..SCREW		4
	AN960PD10	..WASHER		4
	MS21042L3	..NUT		4
-20	41A-10005-40	..GANG CHANNEL		2
	*	IAW C-12-114-000/CF-387		

	FIGURE AND INDEX NUMBER	GROUP	WING	EFFEC-TIVITY	UNITS PER ASSY
		MAJOR ASSEMBLY	WING BOX STRUCTURE		
		PART NUMBER	1 2 3 4 5 6 7 NOMENCLATURE		
	4 -21	41A-10005-42	..GANG CHANNEL		2
	-22	41A-10005-78	..GANG CHANNEL		1
	-23	41A-10005-34	..STRIP - (PORT)		1
		41A-10005-35	..STRIP - (STBD)		1
	-24	41A-10005-36	..STRIP - (PORT)		1
		41A-10005-37	..STRIP - (STBD)		1
	-25	41A-10005-38	..STRIP - (PORT)		1
		41A-10005-39	..STRIP - (STBD)		1
	-25A	NO NUMBER	..STRIP - (IAW C-12-114-000/CF-222)		3
	-26	NAS1203-3	..SCREW		26
		41A-10006-102	.SPAR ASSY - WING MAIN PORT		1
		41A-10006-103	.SPAR ASSY - WING MAIN STBD		1
	-27	41A-87523	..SPIGOT - MAIN LANDING GEAR DOOR		1
		AN960PD616	..WASHER		1
		ZEB1845-064	..NUT - (72962)		1
	-28	41A-10029	..PLATE - WING STA 80 MOUNTING		1
	-29	AM1655	..BEARING ASSY - (V83086) (MAIN LANDING GEAR)		1
	-30	41A-10006-54	..SHIM - (BEARING)		4
	-31	41A-10028	..PLATE - WING STA 80 MOUNTING		1
	-32	NAS1106-9	..BOLT		3
		AN960PD616	..WASHER		3
		MS21042L6	..NUT		3
R	-33	NAS6204-16	..BOLT		10
	-34	NAS1204-15	..BOLT		12
R	-35	NAS6204-9	..BOLT		2
		AN960PD416	..WASHER		48
		MS21042L4	..NUT		24
		41A-10027	..HOUSING ASSY - PYLON SUPPORT		1
	-35A	41A-10027-2	...HOUSING - PYLON SUPPORT		1
	-35B	LHA8	...BEARING - (V73134)		1
		41A-10038	.RIB INSTL - WING ROOT PORT		1
		41A-10038-1	.RIB INSTL - WING ROOT STBD		1
	-35C	41A-10045	..PLATE - BEARING (MLG DOOR HINGE)		2
	-35D	41A-10085	FITTING - FWD HINGE PIVOT - MLG DOOR PORT		1
		41A-10085-1	FITTING - FWD HINGE PIVOT - MLG DOOR STBD		1
		41A-10039-800	.RIB ASSY - WING STA 211 INTERSPAR PORT		1
		41A-10039-803	.RIB ASSY - WING STA 211 INTERSPAR STBD		1
	-36	41A-10039-58	..RETAINER - SEAL (PORT)		1
		41A-10039-59	..RETAINER - SEAL (STBD)		1
		NAS623-3-1	..SCREW - (SEAL RETAINER)		2
		41A-10035-4	.RIB ASSY - WING STA 80 INTERSPAR PORT		1
		41A-10035-5	.RIB ASSY - WING STA 80 INTERSPAR STBD		1
	-37	41A-10026-2	..LUG - RIB STA 80 (UPPER)		1
	-38	41A-10026-4	..LUG - RIB STA 80 (LOWER)		1
R	-39	NAS6204-9	.BOLT - (RIB TO MAIN SPAR)		2
		AN960PD416	.WASHER		4
		MS21042L4	.NUT		2
		41A-10040-2	.DIAPHRAGM ASSY - MAIN LANDING GEAR LH		1
		41A-10040-3	.DIAPHRAGM ASSY - MAIN LANDING GEAR RH		1
		41-10121-800	..PLATE ASSY - LANDING GEAR MOUNTING		1
	-40	41-10121-4	...PLATE - LANDING GEAR MOUNTING		1
		41-87015	...BUSHING - MAIN LANDING GEAR		1

	FIGURE AND INDEX NUMBER	GROUP		WING	EFFEC-TIVITY	UNITS PER ASSY
		MAJOR ASSEMBLY		WING BOX STRUCTURE		
		PART NUMBER		1 2 3 4 5 6 7 NOMENCLATURE		
	4 -41	NAS1154-6	*	..BOLT		7
				OR		
		NAS1155-6	*	..BOLT		
		AN960PD416	*	..WASHER		7
				OR		
		AN960PD516	*	..WASHER		
		AN960PD416L	*	..WASHER		AR
				OR		
		AN960PD516L	*	..WASHER		
		41A-10054		.BEAM ASSY - SIDE STRUT MOUNTING LH		1
		41A-10054-1		.BEAM ASSY - SIDE STRUT MOUNTING RH		1
	-42	41A-10054-2		..BEAM - LH		1
		41A-10054-3		..BEAM - RH		1
	-42A	MS21209F5-15		..INSERT		4
	-43	41A-10049-20		.SHIM - (MOUNTING BEAM)		1
R	-44	NAS6204-10		.BOLT		3
R	-45	NAS6204-11		.BOLT		1
R	-46	NAS6204-8		.BOLT		1
R	-47	NAS6204-5		.BOLT		1
R	-48	NAS6204-4		.BOLT		5
		AN960PD416		.WASHER		11
		MS21042L4		.NUT		11
	-49			DELETED		
	-50			DELETED		
	-50A	41A-35204		.PLUG - JACKING POINT BOLT		1
	-51	MS24694-53		.SCREW		2
		AN960PD10L		.WASHER		2
		MS21042L3		.NUT		2
	-52	41A-10064		.BRACKET - AILERON INBOARD HINGE		1
		41A-10003-90		.PACKING - (HINGE BRACKET)		2
		41A-10003-124		.SHIM - (HINGE BRACKET)		2
	-53	NAS1203-10		.BOLT		8
		AN960PD10		.WASHER		8
		MS21042L3		.NUT		8
		41A-10062		.BRACKET ASSY - AILERON OUTBD HINGE LH		1
		41A-10062-1		.BRACKET ASSY - AILERON OUTBD HINGE RH		1
	-54	41A-10062-2		..BRACKET - AILERON OUTBOARD HINGE LH		1
		41A-10062-3		..BRACKET - AILERON OUTBOARD HINGE RH		1
	-55	MS27643-6		..BEARING		1
		MS16625-1143		..RING		1
		41A-10003-100		.PACKING - (HINGE BRACKET)		2
		41A-10003-122		.SHIM - (HINGE BRACKET)		2
	-56	NAS1203-10		.BOLT - (OUTBOARD HINGE)		8
		AN960PD10		.WASHER		8
		MS21042L3		.NUT		8
	-57	AN742-8		.CLAMP - (ELECTRICAL CONDUIT ROOT RIB)		1
	-57A	MS35218-42		.SCREW		1
		AN960D8L		.WASHER		1
		MS21042L08		.NUT		1
	-58	MS35489-14		.GROMMET - (WING STA 187 RIB)		1
	-59	MS35489-11		.GROMMET - (WING STA 204 FWD SPAR)		1
	-60	S1043		.NAMEPLATE - (V88308)		1
				-OOO-		
			*	IAW C-12-114-000/CD-020		

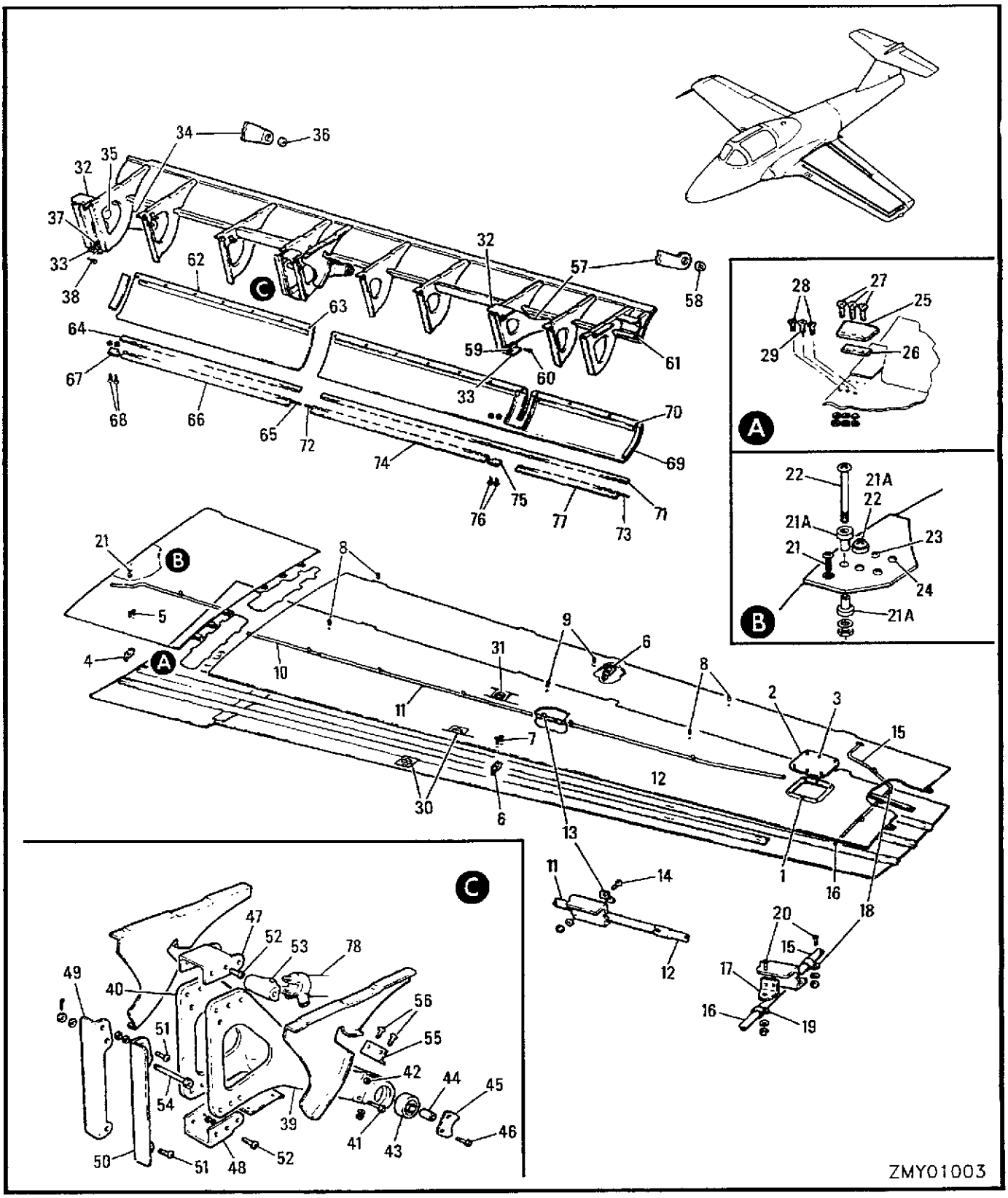

FIGURE 5 WING SKIN PANELS & FLAP SHROUD

FIGURE AND INDEX NUMBER	GROUP	WING	EFFEC-TIVITY	UNITS PER ASSY
	MAJOR ASSEMBLY	WING SKIN PANELS & FLAP SHROUD		
	PART NUMBER	1 2 3 4 5 6 7 NOMENCLATURE		
5 -	41A-10007	PANEL ASSY - SKIN UPPER PORT (SEE FIG. 4)		1
	41A-10007-1	PANEL ASSY - SKIN UPPER STBD		1
- 1	214-16D	.RECEPTACLE - (V71286)		6
	41A-10007-26	.DOOR ASSY - (FLUX VALVE ACCESS PORT) (I)		1
	41A-10007-27	.DOOR ASSY - (ANTENNA ACCESS STBD) (I)		1
- 2	41A-10024-6	..DOOR - (FLUX VALVE ACCESS PORT)		1
	41A-10024-7	..DOOR - (ANTENNA ACCESS STBD)		1
	40G32-1A	..GROMMET - (V71286)		6
	40G26-1	..SNAP RING - (V71286)		6
- 3	40S56-4A	..STUD - (V71286)		6
- 4	41-10173-2	.BRACKET ASSY - HOISTING POINT (WING STA 46 FORWARD)		1
	41-10173-6	..BRACKET		1
	MS21209F415	..INSERT		2
- 5	NAS1204-1	.BOLT		2
- 6	41-10173-4	.BRACKET ASSY - HOISTING POINT (WING STA 132)		2
	41-10173-8	..BRACKET		1
	MS21209F415	..INSERT		2
- 7	NAS1204-1	.BOLT		4
- 8	AN565F1032H4	.SET SCREW - (WING STA 78 & 165 RIG BOARD PLUG)		4
- 9	AN565F428H4	.SET SCREW - (AIL STA 131 RIG BOARD PLUG)		2
-10	41A-42151-10	.CONDUIT - WING ELECTRICAL		1
-11	41A-42151-14	.CONDUIT - WING ELECTRICAL		1
-12	41A-42151-12	.CONDUIT - WING ELECTRICAL		1
-13	41A-42149-8	.SUPPORT - WING TIP AILERON ELEC CONDUIT		7
R -14	MS35218-42	.SCREW		7
	AN960D8L	.WASHER		7
	MS21044D08	.NUT		7
-15	41A-42147	.CONDUIT - AILERON ELECTRICAL (PORT)		1
-16	41A-42148	.CONDUIT ASSY - AILERON ELECTRICAL (PORT)		1
-17	41A-42149-4	.BRACKET - WING TIP (PORT)		3
-18	AN735D6	.CLAMP - (PORT)		1
-19	AN742D6	.CLAMP - (PORT)		3
R -20	MS35218-42	.SCREW - (PORT)		4
	AN960D8L	.WASHER - (PORT)		4
	MS21044D08	.NUT - (PORT)		4
-21	NAS1103-4	.BOLT - (SKIN RETAINING)		17
	AN960PD10L	.WASHER		15
	AN960PD10	.WASHER		4
-21A	41A-10003-953 *	.BUSHING		4
-22	NAS623-3-8 *	.SCREW		2
	AN960PD10 *	.WASHER		2
	MS21042L3 *	.NUT		2
-23	NAS623-3-7	.SCREW - (SKIN RETAINING)		2
-24	NAS623-3-5	.SCREW - (SKIN RETAINING)		2
	AN960PD10	.WASHER		4
	MS21042L3	.NUT		4
	41A-10008	PANEL ASSY - SKIN LOWER PORT (SEE FIG. 4)		1
	41A-10008-1	PANEL ASSY - SKIN LOWER STBD		1
-25	41A-10047-16	.MEMBER - DOOR LANDING		1
-26	41A-10047-18	.MEMBER - DOOR LANDING		1
-27	NAS623-3-4	.SCREW		3
-28	NAS623-3-6	.SCREW		2
-29	NAS1203-6	.BOLT		1
	AN960PD10	.WASHER		6
	MS21042L3	.NUT		6
	*	AS PER C-12-114-000/CF-301		

FIGURE AND INDEX NUMBER	GROUP	WING	EFFEC-TIVITY	UNITS PER ASSY
	MAJOR ASSEMBLY	WING SKIN PANELS & FLAP SHROUD		
	PART NUMBER	1 2 3 4 5 6 7 NOMENCLATURE		
5 -30	41A-10048-4	.DOOR ASSY - WING TANK PYLON (I)		2
	41A-10048-8	..DOOR - WING TANK PYLON		1
	41A-10048-20	..SCREW - (MADE FROM AN507-1032R14)		1
-31	41A-10048-800	.DOOR ASSY - WING TANK PYLON (I)		1
	41A-10048-6	..DOOR - WING TANK PYLON		1
	41A-10048-20	..SCREW - (MADE FROM AN507-1032R14)		2
	41A-10009	SHROUD ASSY - FLAP PORT (SEE FIG. 4)		1
	41A-10009-1	SHROUD ASSY - FLAP STBD		1
-32	41A-10068	.BRACKET - FLAP HINGE LH (PORT LOWER & STBD UPPER)		2
-33	41A-10068-1	.BRACKET - FLAP HINGE RH (PORT UPPER & STBD LOWER)		2
	41A-10058-6	.LEVER ASSY - FLAP INBOARD HINGE		1
-34	41A-10063-8	..LEVER - FLAP INBOARD HINGE		1
-35	ADB8V	..BEARING - (V83086)		1
-36	MS27643-4	..BEARING		1
-37	41A-10009-118	.SHIM - (HINGE LEVER)		2
-38	NAS623-3-13	.SCREW		4
	AN960PD10	.WASHER		4
	MS21042L3	.NUT		4
	41A-10073	.LEVER ASSY - FLAP CENTRE HINGE		1
-39	41A-10072	..LEVER - FLAP CENTRE HINGE LH		1
-40	41A-10072-1	..LEVER - FLAP CENTRE HINGE RH		1
R -41	NAS6204-18	..BOLT		1
R -42	NAS6204-19	..BOLT		1
	AN960PD416	..WASHER		2
	MS21042L4	..NUT		2
-43	MS20206DSP5	..BEARING		1
-44	41-14013-2	..BUSHING - FLAP CENTRE HINGE		2
-45	41A-10074	..PLATE - FLAP CENTRE HINGE BEARING RTNG		2
-46	NAS1103-14	..BOLT		2
	AN960PD10	..WASHER		2
	MS21042L3	..NUT		2
-47	41-10164-3	.CHANNEL - FLAP CENTRE HINGE RH (PORT UPPER & STBD LOWER)		1
-48	41-10164-2	.CHANNEL - FLAP CENTRE HINGE LH (PORT LOWER & STBD UPPER)		1
-49	41A-10061-56	.ANGLE - LH		1
	41A-10061-57	.ANGLE - RH		1
-50	41A-10061-52	.ANGLE - LH		1
	41A-10061-53	.ANGLE - RH		1
-51	NAS623-3-8	.SCREW		4
-52	NAS623-3-7	.SCREW		8
	AN960PD10	.WASHER		12
	MS21042L3	.NUT		12
-53	41A-10071	.TRUNNION - FLAP ACTUATOR		1
R -54	NAS6204-50D	.BOLT		1
	41A-10009-952	.BUSHING - (LH)		AR
	AN960PD416	.WASHER		1
	AN320-4	.NUT		1
	MS24665-153	.COTTER PIN		1
-55	41A-10061-129	.ANGLE - (CENTRE HINGE PORT)		1
	41A-10061-128	.ANGLE - (CENTRE HINGE STBD)		1
-56	NAS623-3-3	.SCREW		2
	AN960PD10	.WASHER		2
	MS21042L3	.NUT		2
	41A-10057	.LEVER ASSY - FLAP OUTBOARD HINGE		1
-57	41A-10063-2	..LEVER - FLAP OUTBOARD HINGE		1
-58	AN206DSP4	..BEARING		1
-59	41A-10009-118	.SHIM - (HINGE LEVER)		2
-60	NAS623-3-13	.SCREW		4
	AN960PD10	.WASHER		4
	MS21042L3	.NUT		4
-61	214-16	.RECEPTACLE - (V36135)		18

	FIGURE AND INDEX NUMBER	GROUP	WING	EFFEC-TIVITY	UNITS PER ASSY
		MAJOR ASSEMBLY	WING SKIN PANELS & FLAP SHROUD		
		PART NUMBER	1 2 3 4 5 6 7 NOMENCLATURE		
	5 -	41A-10009-2	.DOOR ASSY - (SHROUD INBD PORT) (I)		1
		41A-10009-3	.DOOR ASSY - (SHROUD INBD STBD) (I)		1
	-62	41A-10061-26	..DOOR - (SHROUD PORT)		1
		41A-10061-27	..DOOR - (SHROUD STBD)		1
R		4002G	..GROMMET - (V36135)		7
R		R4G	..SNAP RING - (V36135)		7
	-63	40S5-3	..STUD - (CFC)		7
	-64	41A-10061-110	..HALF HINGE - (PORT)		1
		41A-10061-111	..HALF HINGE - (STBD)		1
	-65	41A-10009-106	..PIN - HINGE		1
	-66	41A-10061-102	.HALF HINGE - (INBOARD DOOR PORT)		1
		41A-10061-103	.HALF HINGE - (INBOARD DOOR STBD)		1
	-67	41A-10061-124	.STOP - (DOOR HINGE PORT)		1
		41A-10061-125	.STOP - (DOOR HINGE STBD)		1
	-68	NAS623-2-2	.SCREW		2
		MS21042L8	.NUT		2
		41A-10009-4	.DOOR ASSY - (SHROUD OUTBD PORT) (I)		1
		41A-10009-5	.DOOR ASSY - (SHROUD OUTBD STBD) (I)		1
	-69	41A-10009-154	..DOOR ASSY - (SHROUD WELDED PORT)		1
		41A-10009-155	..DOOR ASSY - (SHROUD WELDED STBD)		1
R		4002G	..GROMMET - (V36135)		11
R		R4G	..SNAP RING - (V36135)		11
R	-70	40S5-3	..STUD - (V36135)		11
	-71	41A-10061-108	..HALF HINGE - (PORT)		1
		41A-10061-109	..HALF HINGE - (STBD)		1
	-72	41A-10009-105	..PIN - HINGE		1
	-73	41A-10009-104	..PIN - HINGE		1
	-74	41A-10061-104	.HALF HINGE - (OUTBD DOORINNER PORT)		1
		41A-10061-105	.HALF HINGE - (OUTBD DOOR INNER STBD)		1
	-75	41A-10061-127	.STOP - (DOOR INNER HINGE PORT)		1
		41A-10061-126	.STOP - (DOOR INNER HINGE STBD)		1
	-76	NAS1202-3	.SCREW		2
		MS21042L8	.NUT		2
	-77	41A-10061-106	.HALF HINGE - (OUTBD DOOR OUTER PORT)		1
		41A-10061-107	.HALF HINGE - (OUTBD DOOR OUTER STBD)		1
	-78	6350-1	ACTUATOR ASSY - FLAP (SEE SECTION 8)		REF

-OOO-

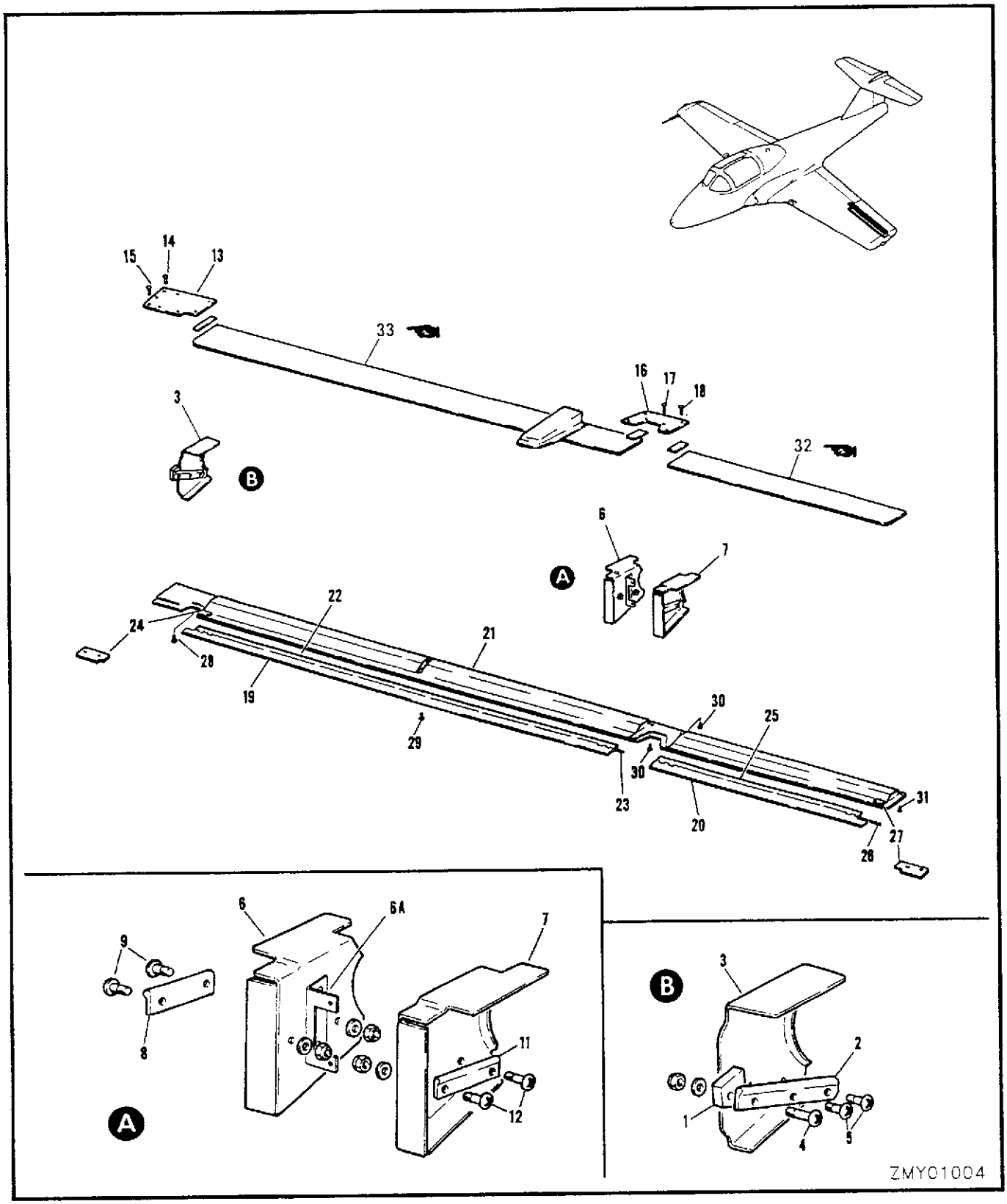

FIGURE 6 AILERON SHROUD

FIGURE AND INDEX NUMBER	GROUP: WING MAJOR ASSEMBLY: AILERON SHROUD PART NUMBER	1234567 NOMENCLATURE	EFFEC-TIVITY	UNITS PER ASSY
6 -	41A-10010-800	SHROUD INSTL - AILERON PORT (SEE FIG. 4)		NP
	41A-10010-1	SHROUD INSTL - AILERON STBD		NP
- 1	41A-10010-118	.BLOCK - PHENOLIC LH		1
	41A-10010-119	.BLOCK - PHENOLIC RH		1
- 2	41A-10010-140	.RETAINER - SEAL LH		1
	41A-10010-141	.RETAINER - SEAL RH		1
- 3	41A-10010-84	.DIAPHRAGM - LH		1
	41A-10010-85	.DIAPHRAGM - RH		1
- 4	NAS623-3-10	.SCREW		1
	AN960PD10	.WASHER		1
	MS21042L3	.NUT		1
- 5	NAS623-3-2	.SCREW		2
- 6	41A-10010-156	.DIAPHRAGM - LH		1
- 6A	41A-10010-158	.BRACKET ASSY - LH		1
	41A-10010-83	.DIAPHRAGM - RH		1
- 7	41A-10010-80	.DIAPHRAGM - LH		1
	41A-10010-81	.DIAPHRAGM - RH		1
- 8	41A-10010-142	.RETAINER - SEAL LH		1
	41A-10010-143	.RETAINER - SEAL RH		1
- 9	NAS623-3-2	.SCREW		2
	AN960PD10	.WASHER		2
	MS21042L3	.NUT		2
-10		DELETED		
-11	41A-10010-144	.RETAINER - SEAL LH		1
	41A-10010-145	.RETAINER - SEAL RH		1
-12	NAS623-3-2	.SCREW		2
	AN960PD10	.WASHER		2
	MS21042L3	.NUT		1
-13	41A-10010-88	.COVER PLATE - (AILERON INBD HINGE PORT)(I)		1
	41A-10010-89	.COVER PLATE - (AILERON INBD HINGE STBD)(I)		1
-14	NAS1203-2	.BOLT		4
-15	NAS1203-3	.BOLT		4
-16	41A-10010-86	.COVER PLATE - (AIL. OUTBD HINGE PORT) (I)		1
	41A-10010-87	.COVER PLATE - (AIL. OUTBD HINGE STBD) (I)		1
-17	NAS1203-2	.BOLT		2
-18	NAS1203-3	.BOLT		4
-19	41A-10010-96	.HALF HINGE - (SHROUD DOOR INBD PORT)		1
	41A-10010-97	.HALF HINGE - (SHROUD DOOR INBD STBD)		1
-20	41A-10010-92	.HALF HINGE - (SHROUD DOOR OUTBD PORT)		1
	41A-10010-93	.HALF HINGE - (SHROUD DOOR OUTBD STBD)		1
	41A-10010-184	.DOOR ASSY - (AILERON SHROUD PORT) (I)		1
	41A-10010-185	.DOOR ASSY - (AILERON SHROUD STBD) (I)		1
-21	41A-10010-182	..DOOR ASSY - (SHROUD BONDED PORT)		1
	41A-10010-183	..DOOR ASSY - (SHROUD BONDED STBD)		1
-22	41A-10010-94	..HALF HINGE - (DOOR INBOARD PORT)		1
	41A-10010-95	..HALF HINGE - (DOOR INBOARD STBD)		1
-23	41A-10010-98	..PIN - HINGE		1
-24	41A-10010-102	..STOP - (DOOR INBOARD HINGE PORT)		1
	41A-10010-103	..STOP - (DOOR INBOARD HINGE STBD)		1
-25	41A-10010-90	..HALF HINGE - (DOOR OUTBOARD PORT)		1
	41A-10010-91	..HALF HINGE - (DOOR OUTBOARD STBD)		1
-26	41A-10010-99	..PIN - HINGE		1
-27	41A-10010-100	..STOP - (DOOR OUTBD HINGE PORT)		1
	41A-10010-101	..STOP - (DOOR OUTBD HINGE STBD)		1
-28	NAS1203-4	..BOLT - (DOOR)		2
-29	NAS1203-6	..BOLT		1
-30	NAS1203-3	..BOLT		2
-31	NAS1203-2	..BOLT		1
R -32	41A-10010-2	.SHROUD STRIP - (BONDED SUB ASSY LH OUTER)		1
R	41A-10010-3	.SHROUD STRIP - (BONDED SUB ASSY RH OUTER)		1
R -33	41A-10010-4	.SHROUD STRIP - (BONDED SUB ASSY LH INNER)		1
R	41A-10010-5	.SHROUD STRIP - (BONDED SUB ASSY RH INNER)		1

-000-

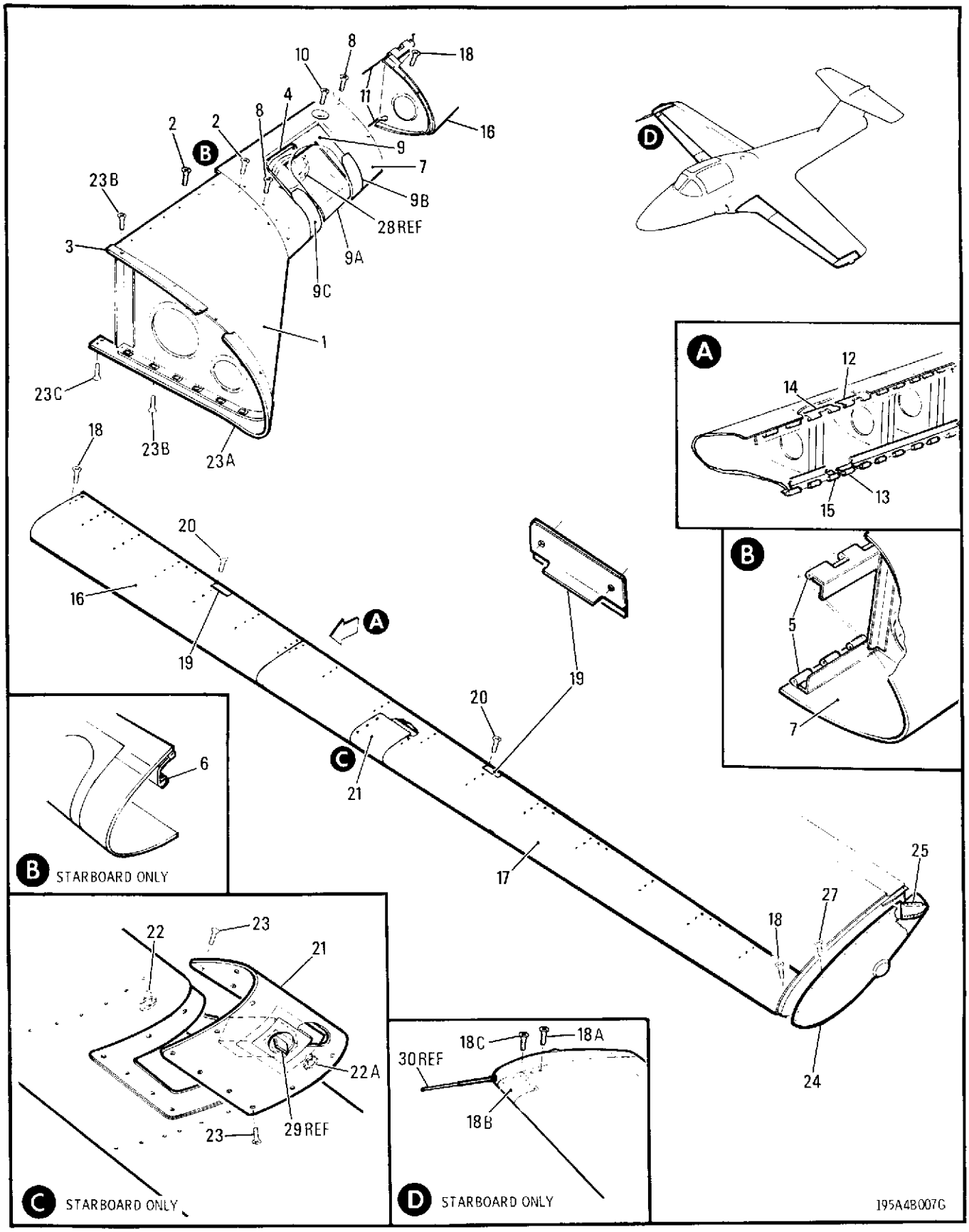

FIGURE 7 DROOP SNOOT FAIRING. WING LEADING EDGE AND TIP

FIGURE AND INDEX NUMBER	GROUP	WING	EFFEC-TIVITY	UNITS PER ASSY
	MAJOR ASSEMBLY	DROOP SNOOT FAIRING, WING LEADING EDGE & TIP		
	PART NUMBER	1 2 3 4 5 6 7 NOMENCLATURE		
7 -	41A-12100	LEADING EDGE ASSY - WING PORT (I) (SEE FIG. 2)		1
	41A-12100-803	LEADING EDGE ASSY - WING STBD (I)		1
	41A-12100-6	.LEADING EDGE ASSY - WING DROOP SNOOT PORT (I)		1
	41A-12100-7	.LEADING EDGE ASSY - WING DROOP SNOOT STBD (I)		1
- 1	41A-12100-16	..SKIN - WING DROOP SNOOT		1
	41A-12100-17	..SKIN - WING DROOP SNOOT RH		1
- 2	NAS1203-3	..BOLT		31
- 3	NAS1203-5	..BOLT		1
	41A-12100-4	.LEADING EDGE ASSY - LANDING LAMP HOUSING PORT (I)		1
	41A-12100-5	.LEADING EDGE ASSY - LANDING LAMP HOUSING STBD (I)		1
- 4	41-12010	..BASE - LANDING LAMP MOUNTING LH		1
	41-12010-1	..BASE - LANDING LAMP MOUNTING RH		1
- 5	41A-12100-174	..HALF HINGE - LANDING LA		2
R - 6	S4905	..EXTRUSION - (V88308) (RUBBING STRIP)		2
- 7	41A-12100-140	..SKIN - LANDING LAMP LE LH		1
	41A-12100-141	..SKIN - LANDING LAMP LE RH		1
- 8	NAS1203-3	..BOLT - (LANDING LAMP LE RETAINING)		20
- 9	41-12011-800 *	..GLAZING ASSY - LANDING LAMP LH (FOR SPARES ORDER 41-12011-802)		1
	41-12011-802 *	..GLAZING ASSY - LANDING LAMP LH (SPARE FOR 41-12011-800)		
	41-12011-801 *	..GLAZING ASSY - LANDING LAMP RH (FOR SPARES ORDER 41-12011-803)		1
	41-12011-803 *	..GLAZING ASSY - LANDING LAMP RH (SPARE FOR 41-12011-801)		
- 9A	9535-21-813-8544	..SHIELD - (ANTI GLARE)(FOR SPARES ORDER 41A-12102 & -1		1
	41A-12102	..SHIELD - LH (SPARE FOR 9535-21-813-8544)		
	41A-12102-1	..SHIELD - RH (SPARE FOR 9535-21-813-8544)		
- 9B	NO NUMBER **	.STRIP - PROTECTIVE (INBD)		1
- 9C	NO NUMBER **	.STRIP - PROTECTIVE (INBDD)		1
-10	NAS1203-5 *	..BOLT		8
R	A3235SS020 **	.WASHER - (V78533)		4
R -11	S1267-9-4775	.PIN ASSY - (V88308)		6
	41A-12100-2	.LEADING EDGE ASSY -WING STA 82-210 PORT(I)		1
	41A-12100-801	.LEADING EDGE ASSY -WING STA 82-210 STBD(I)		1
-12	41A-12100-164	..HALF HINGE - (PORT UPPER & STBD LOWER)		1
-13	41A-12100-165	..HALF HINGE - (PORT LOWER & STBD UPPER)		1
-14	41A-12100-158	..HALF HINGE - (PORT UPPER & STBD LOWER)		1
-15	41A-12100-159	..HALF HINGE - (PORT LOWER & STBD UPPER)		1
-16	41A-12100-10	..SKIN - LEADING EDGE INBOARD LH		1
	41A-12100-11	..SKIN - LEADING EDGE INBOARD RH		1
-17	41A-12100-8	..SKIN - LEADING EDGE OUTBOARD LH		1
	41A-12100-9	..SKIN - LEADING EDGE OUTBOARD RH		1
-18	NAS1203-3	..BOLT		16
	41A-12100-216	..STRIP - RUBBING (STBD WING)		1
-18A	NAS1203-3	..BOLT		2
	AN960PD10L	..WASHER		2
	MS21042L3	..NUT		2
-18B	41A-12100-218	..DOOR - ACCESS (PITOT-ST ATIC BOOM) (STBD)		1
-18C	NAS1203-3	..BOLT - (STBD)		12
	*	IAW C-12-114-000/CF-473		
	**	IAW C-12-114-000/CF-329 & 473		

FIGURE AND INDEX NUMBER	GROUP	WING	EFFEC-TIVITY	UNITS PER ASSY
	MAJOR ASSEMBLY	DROOP SNOOT FAIRING, WING LEADING EDGE & TIP		
	PART NUMBER	1 2 3 4 5 6 7 NOMENCLATURE		
7 -19	41A-12100-150	..STOP ASSY - HINGE		4
-20	NAS1202-3	..BOLT		8
-21	41A-12100-201	..DOOR - (LIFT TRANSDUCER STBD)		1
-22	A4A1B1-071	..RECEPTACLE - (V84256) (STBD)		1
-22A	A4A1B1-100	..RECEPTACLE - (V84256) (STBD)		1
-23	NAS1203-3	..BOLT - (LIFT TRANSDUCER DOOR)		16
	41A-35098	FAIRING INSTL - FUS DROOPSNOOT PORT (SEE FIG. 1)		NP
	41A-35098-1	FAIRING INSTL - FUS DROOP SNOOT STBD		NP
R -23A	41A-35098-2/ST	.FAIRING ASSY - FUS DROOP SNOOT LH (I)		1
R	41A-35098-3/ST	.FAIRING ASSY - FUS DROOP SNOOT RH (I)		1
-23B	NAS1203-3	.BOLT		20
-23C	NAS1203-4	.BOLT		2
	A3235-020-24A	.WASHER - (V78533)		22
	S1246T12-26-32	..WASHER - (V88308)		
	41A-11000	TIP GENL ASSY - WING PORT (INTERCHANGEABLE) (SEE FIG. 2)		1
	41A-11000-1	TIP GENL ASSY - WING STBD (INTERCHANGEABLE)		1
	41A-11002	.TIP ASSY - WING PORT		1
	41A-11002-1	.TIP ASSY - WING STBD		1
-24	41A-11002-2	..TIP - WING PORT		1
	41A-11002-3	..TIP - WING STBD		1
-25	41A-11010	..RIB - WING TIP TRAILING EDGE PORT		1
	41A-11010-1	..RIB - WING TIP TRAILING EDGE STBD		1
-26		DELETED		
-27	NAS560HK3-2	.SCREW		26
-28	MS25241-4553	LAMP - LANDING (SEE SECTION 12)		REF
-29	C75507	LIFT TRANSDUCER - (SEE SECTION 12)		REF
-30	AN5816-2	TUBE - PITOT STATIC (STBD) (SEE SECTION 15)		REF

-000-

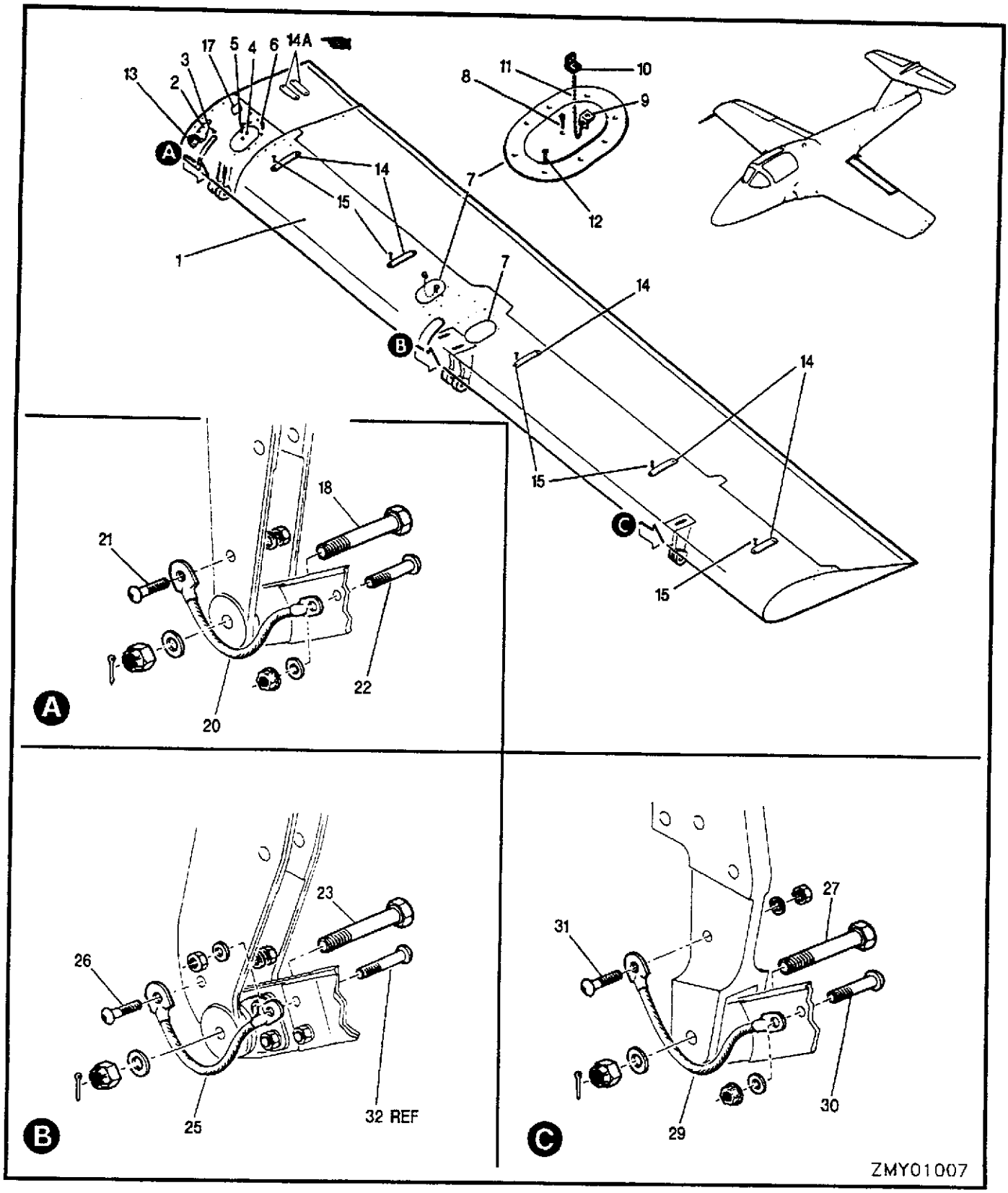

FIGURE 8 WING COMPLETE FLAP

	FIGURE AND INDEX NUMBER	GROUP	WING	EFFEC-TIVITY	UNITS PER ASSY
		MAJOR ASSEMBLY	WING COMPLETE FLAP		
		PART NUMBER	1 2 3 4 5 6 7 NOMENCLATURE		
	8 -	41A-14000-800	FLAP GENL ASSY - WING PORT (SEE FIG. 2)		1
		41A-14000-801	FLAP GENL ASSY - WING STBD		1
	- 1	41A-14002	.FLAP ASSY - WING PORT (INTERCHANGEABLE)		1
		41A-14002-1	.FLAP ASSY - WING STBD (INTERCHANGEABLE)		1
	- 2	41A-14002-170	..DOOR - LH (INBOARD RIB INSPECTION) (I)		1
		41A-14002-171	..DOOR - RH (INBOARD RIB INSPECTION) (I)		1
	- 3	NAS623-3-1	..SCREW		8
		41A-14002-12	..DOOR ASSY - (INBD HINGE INSPECTION) (I)		1
	- 4	41A-14002-110	...DOOR - (INBD HINGE INS PECTION)		1
	- 5	NAS1203-2	...BOLT		1
	- 6	NAS1203-2	..BOLT		8
		41A-14002-10	..DOOR ASSY - (CENTRE HINGE INSPECTION) (I)		2
	- 7	41A-14002-84	...DOOR - (CENTRE HINGE INSPECTION)		1
	- 8	NAS1203-2	...BOLT		1
	- 9	S1191	...CLIP - (V88308)		1
	- 10	S1191	...CLIP - (V88308)		2
	- 11	NAS1201B6-12	..CHAIN		2
	- 12	NAS1203-2	..BOLT - (INSPECTION DOOR)		16
	- 13	41A-14013	..BRACKET - FLAP FOLLOW UP MECHANISM (PORT)		1
	- 14	41A-14002-146	..STRIP - (FLAP RUBBING) (INTERCHANGEABLE) (MAKE FROM BULK MATERIAL TIVAR 1000, 0.062 IN. THICK)		5
	-14A	41A-14002-238	..STRIP - (FLAP RUBBING) (MAKE FROM BULK MATERIAL TIVAR 1000, 0.030 IN. THICK)		2
	- 15	NAS623-3-2	..SCREW		10
	- 16		DELETED		
	- 17	S1043	..NAMEPLATE - (V88308) (INBOARD RIB)		1
R	- 18	NAS6204-25D	.BOLT - (WING STA 30)		1
		S1236-416	.WASHER - (V88308) (SHIM)		AR
		S1236-416L	.WASHER - (V88308) (SHIM)		AR
		AN960PD416L	.WASHER		1
		AN310-4	.NUT		1
		MS24665-134	.COTTER PIN		1
	- 19		DELETED		
	- 20	MS25083-2AA4	.JUMPER ASSY		1
	- 21	MS35206-231	.SCREW		1
		AN960PD6	.WASHER		1
		MS21042L06	.NUT		1
	- 22	MS35206-232	.SCREW - (JUMPER TO WING)		1
		AN960PD6	.WASHER		1
		MS21042L06	.NUT		1
R	- 23	NAS6204-28D	.BOLT - (WING STA 72)		1
		AN960PD416L	.WASHER		1
		AN310-4	.NUT		1
		MS24665-134	.COTTER PIN		1
	- 24		DELETED		
	- 25	MS25083-2AC4	.JUMPER ASSY		1
	- 26	MS35206-231	.SCREW		1
		AN960PD6	.WASHER		1
		MS21042L06	.NUT		1
R	- 27	NAS6204-19D	.BOLT - (WING STA 110)		1
		AN960PD416L	.WASHER - (SHIM)		AR
		S1236-416	.WASHER - (V88308) (SHIM)		AR
		S1236-416L	.WASHER - (V88308) (SHIM)		AR
		AN310-4	.NUT		1
		MS24665-134	.COTTER PIN		1
	- 28		DELETED		
	- 29	MS25083-2AA5	.JUMPER ASSY		1
	- 30	MS35206-232	.SCREW - (JUMPER TO WING)		1
		AN960PD6	.WASHER		1
		MS21042L06	.NUT		1
	- 31	MS35206-231	.SCREW		1
		AN960PD6	.WASHER		1
		MS21042L06	.NUT		1
R	- 32	NAS6204-19	BOLT - (SEE FIG. 5)		REF
			-OOO-		

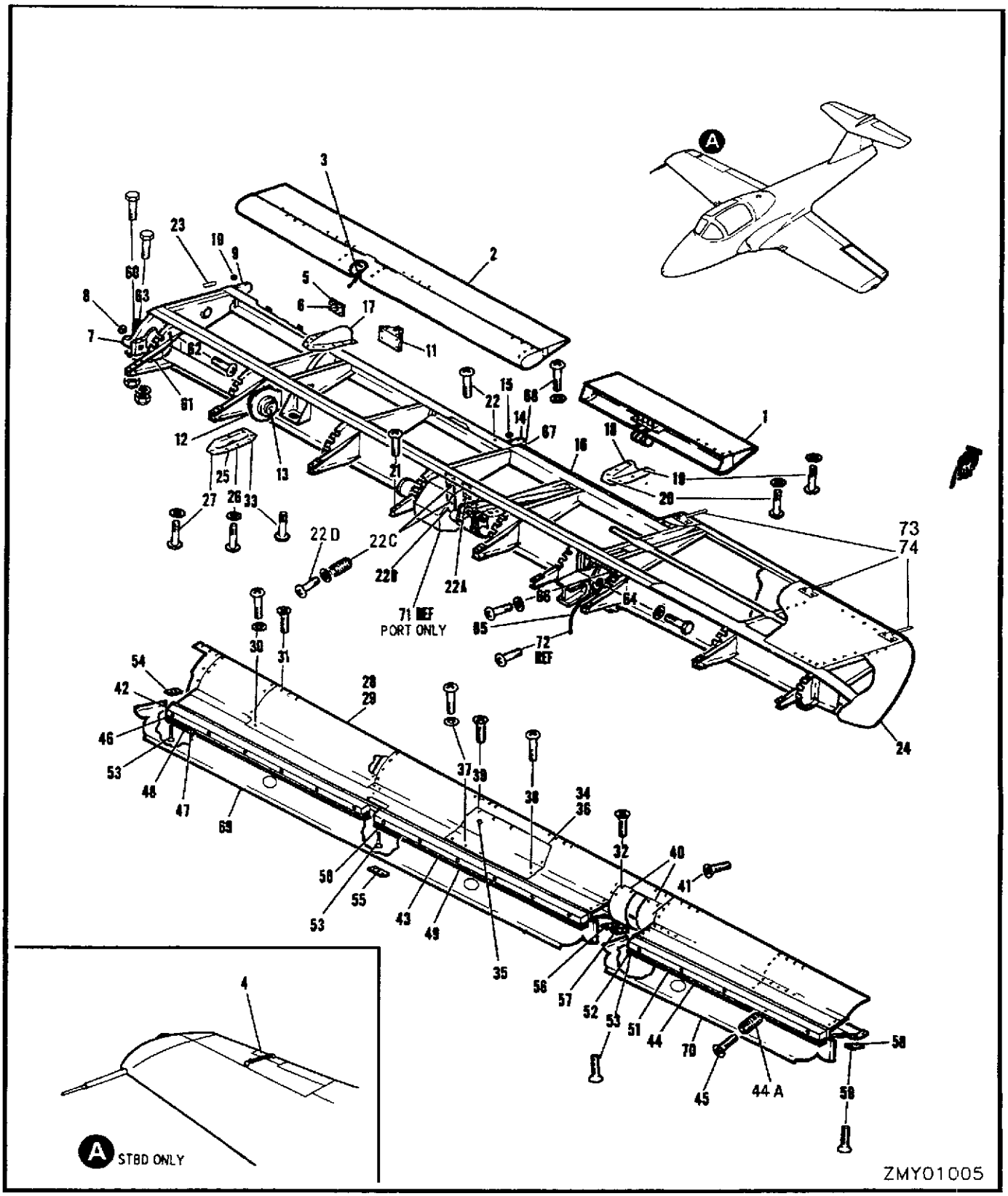

FIGURE 9 WING COMPLETE AILERON

FIGURE AND INDEX NUMBER	GROUP	WING	EFFEC-TIVITY	UNITS PER ASSY
	MAJOR ASSEMBLY	WING COMPLETE AILERON		
	PART NUMBER	1 2 3 4 5 6 7 NOMENCLATURE		
9 -	41A-13101-812	AILERON GENL ASSY - LH WING (I) (SEE FIG. 2)		1
	41A-13101-814	AILERON GENL ASSY - RH WING (I)		1
- 1	41A-13104	.TAB ASSY - AILERON TRIM (SEE FIG. 10)		REF
- 2	41A-13103-802	.TAB ASSY - AILERON SPRING (SEE FIG. 10)		REF
- 3	MS25083-2BC4	.JUMPER ASSY		1
- 4	41A-90707	.ROD INSTL - GEARED TAB CONTROL (STBD) (SEE SECTION 7)		REF
	41A-13101-50	.AILERON ASSY - LH		1
	41A-13101-46	.AILERON ASSY - RH		1
	41A-42103-54	..ELECTRICAL EQUIP INSTL - AILERON (SEE SECTION 12)		REF
	41A-57403	..HARNESS ASSY - P4C TO AIL TRIM TAB RELAY (SEE SECTION 12)		REF
	S1244E	..CONDUIT - (PORT) (SEE SECTION 12)		REF
	41A-90701-800	..AILERON CONTROL INSTL - (SEE SECTION 7)		REF
	41A-13102-804	..AILERON STRUCTURE ASSY - LH (I)		1
	41A-13102-802	..AILERON STRUCTURE ASSY - RH (I)		1
	41A-90734-6	...BEARING ASSY - AILERON SPRING TAB		1
- 5	41A-90734-8	....HOUSING - SPRING TAB BEARING		1
- 6	ADB4V	....BEARING - (V83086)		1
	41A-90703	...HOUSING ASSY - AILERON SPRING TAB BEARING PORT		1
	41A-90703-1	...HOUSING ASSY - AILERON SPRING TAB BEARING STBD		1
- 7	41A-90703-2	....HOUSING - SPRING TAB BEARING PORT		1
	41A-90703-3	....HOUSING - SPRING TAB BEARING STBD		1
	MS21209F1-20	....INSERT		2
	MS21209F4-15	....INSERT		1
	MS21209F4-20	....INSERT		1
- 8	MS27641-12	....BEARING		1
	41A-13121-800	...BRACKET ASSY - WING STA 132 AIL HINGE		1
- 9	41A-13121-8	....BRACKET - WING STA 132 AIL HINGE		1
-10	MS27645-3A	....BEARING		1
-11	41A-13135	...BRACKET - WING STA 148		1
	41A-90728	...HOUSING ASSY - AILERON SPRING TAB BRG		1
-12	41A-90728-2	....HOUSING - AILERON SPRING TAB BEARING		1
-13	B543DD	....BEARING - (V21335)		1
	41A-13123-800	...BRACKET ASSY - WING STA 166 AIL HINGE		1
-14	41A-13123-8	....BRACKET - WING STA 166 AIL HINGE		1
-15	MS27645-3A	....BEARING		1
-16	41A-13102-250	...HALF HINGE - (AILERON TRIM & GEAR TAB)		1
-17	41A-13102-268	...FAIRING - (UPPER SPRING TAB LH)		1
	41A-13102-269	...FAIRING - (UPPER SPRING TAB RH)		1
-18	41A-13102-272	...FAIRING - (TRIM TAB LH) (I)		1
-19	NAS623-3-1	...SCREW - (LH)		4
	NAS623-3-2	...SCREW - (LH)		1
-20	AN960-10L	...WASHER - (LH)		5
-21	NAS623-3-1	...SCREW - (AILERON RIG BOARD PLUG)		2
R -22	MS35207-262	...SCREW - (TAB RIG BOARD PLUG)		4
-22A	41A-13102-616	...BLOCK - MOTOR (LH)		1
-22B	41A-13102-254	...BLOCK - MOTOR (LH)		1
-22C	3591-4CN X 3/8	...INSERT - (HCL) (ON 41A-13102-254)		2
-22D	NAS623-4-8	...SCREW - (LH)		2
	AN960PD416L	...WASHER - (LH)		2
-23	S1043	...NAMEPLATE - (V88308) (INBOARD RIB)		1
-24	41A-13102-14	...TIP ASSY - AILERON (LH)		1
	41A-13102-15	...TIP ASSY - AILERON (RH)		1
-25	41A-13102-270	...FAIRING - (SPRING TAB LOWER LH) (I)		1
	41A-13102-271	...FAIRING - (SPRING TAB LOWER RH) (I)		1
-26	NAS623-3-1	...SCREW		4
-27	NAS623-3-2	...SCREW		1
	AN960-10L	...WASHER		5

	FIGURE AND INDEX NUMBER	GROUP	WING	EFFEC-TIVITY	UNITS PER ASSY
		MAJOR ASSEMBLY	WING COMPLETE AILERON		
		PART NUMBER	1 2 3 4 5 6 7 NOMENCLATURE		
	9 -28	41A-13102-424	...COVER - (LH UPPER & RH LOWER) (I)		1
	-29	41A-13102-425	...COVER - (LH LOWER & RH UPPER) (I)		1
	-30	NAS623-3-3	...SCREW		16
		AN960-10L	...WASHER		16
	-31	NAS1203-3	...BOLT		16
R	-32	NAS1203-2	...BOLT		10
	-33	NAS623-3-2	...SCREW - (COVER & SPRING TAB FAIRING)		2
	-34	41A-13102-434	...COVER - (NOSE BEAK UPPER LH) (I)	001-025	1
		41A-13102-598	...COVER ASSY - (NOSE BEAK UPPER LH) (I)	026-	1
	-35	A6912-832-1	...PATCH PLATE - (V78533) (LH)		1
	-36	41A-13102-435	...COVER - (NOSE BEAK LOWER LH) (I)		1
	-37	NAS623-3-3	...SCREW	001-025	10
		NAS623-3-3	...SCREW	026-	5
		NAS1203-3	...BOLT	026-	5
		AN960-10L	...WASHER		10
	-38	NAS623-3-4	...SCREW		4
	-39	NAS1203-1	...BOLT		10
	-40	41A-13102-436	...COVER - (OUTBOARD HINGE PORT) (I)		1
		41A-13102-437	...COVER - (OUTBOARD HINGE STBD) (I)		1
R	-41	NAS1203-2	...BOLT		6
	-42	41A-13138-2	...WEIGHT - AILERON MASS BALANCE (LH INBD)		1
		41A-13138-3	...WEIGHT - AILERON MASS BALANCE (RH INBD)		1
	-43	41A-13138-4	...WEIGHT - AILERON MASS BALANCE (LH CENTRE		1
		41A-13138-5	...WEIGHT - AILERON MASS BALANCE (RH CENTRE		1
	-44	41A-13138-6	...WEIGHT - AILERON MASS BALANCE (LH OUTBD)		1
		41A-13138-7	...WEIGHT - AILERON MASS BALANCE (RH OUTBD)		1
	-44A	MS21209F4-20	....INSERT		17
	-45	MS24694-69	...SCREW	001-025	17
		MS24694-79	...SCREW	026-	2
		NAS1203-20	...BOLT	026-	15
	-46	41A-13102-456	...WEIGHT - (INBOARD ADJUSTABLE BALANCE		AR
	-47	41A-13102-586	...WEIGHT - BALANCE (RIVETED)		1
	-48	41A-13102-577	...RETAINER - (INBOARD SEAL LH)		1
		41A-13102-450	...RETAINER - (INBOARD SEAL RH)		1
	-49	41A-13102-458	...WEIGHT - (CENTRE ADJUSTABLE BALANCE)		AR
	-50	41A-13102-527	...RETAINER - (CENTRE SEAL LH)		1
		41A-13102-452	...RETAINER - (CENTRE SEAL RH)		1
	-51	41A-13102-460	...WEIGHT - (OUTBOARD ADJUSTABLE BALANCE)		AR
	-52	41A-13102-569	...RETAINER - (OUTBOARD SEAL LH)		1
		41A-13102-454	...RETAINER - (OUTBOARD SEAL RH)		1
	-53	MS24694S50	...SCREW		20
	-54	41A-13102-440	...RETAINER - (INBOARD HINGE SEAL LH)		1
		41A-13102-441	...RETAINER - (INBOARD HINGE SEAL RH)		1
	-55	41A-13102-570	...RETAINER - (WING STA 161 SEAL)		1
	-56	41A-13102-576	...RETAINER - (OUTBD HINGE INNER SEAL)		1
	-57	41A-13102-580	...RETAINER - (OUTBD HINGE OUTER SEAL)		1
	-58	41A-13102-578	...RETAINER - (WING STA 210 SEAL)		1
	-59	NAS1203-3	...BOLT		9
R	-60	NAS6204-36	..BOLT - (AILERON STA 133)		1
	-61	MS25083-2BC5	..JUMPER ASSY		1
	-62	NAS623-3-2	..SCREW - (JUMPER)		1
R	-63	NAS6204-38	..BOLT - (AILERON STA 133)		1
		AN960PD416	..WASHER		2
		MS21042L4	..NUT		2
	-64	NAS1106-29D	..BOLT - (AILERON STA 189)		1
		41A-10070	..COLLAR - OUTBOARD AILERON HINGE		2
		AN960PD616	..WASHER - (1 UNDER BOLT HEAD)		2
		AN320-6	..NUT		1
		MS24665-285	..COTTER PIN		1

	FIGURE AND INDEX NUMBER	GROUP	WING	EFFEC-TIVITY	UNITS PER ASSY
		MAJOR ASSEMBLY	WING COMPLETE AILERON		
		PART NUMBER	1 2 3 4 5 6 7 NOMENCLATURE		
	9 -65	MS25083-2BB8	..JUMPER ASSY		1
	-66	NAS623-3-2	..SCREW		1
		AN960PD10	..WASHER		1
	-67	41A-13102-252	..STOP - HINGE PIN		1
	-68	NAS623-2-1	..SCREW		2
		AN960PD8L	..WASHER		2
		MS21042L08	..NUT		2
	-69	41A-13140-4	..SEAL ASSY - AILERON (INBOARD)		1
	-70	41A-13140-2	..SEAL ASSY - AILERON (OUTBOARD)		1
	-71	R422M22-1	ACTUATOR INSTL - AILERON TRIM TAB (SEE SECTION 7)		REF
	-72	NAS623-3-2	SCREW - (SEE FIG. 6)		REF
R		NW4602000-1 *	STATIC DISCHARGERS INSTL (SEE SECTION 13)		REF
R	-73	NW4602005-1 *	.BASE		6
R	-74	SD1 *	.DISCHARGER - TRG (VTBD)		6
R		*	IAW C-12-114-000/CD-033		

-000-

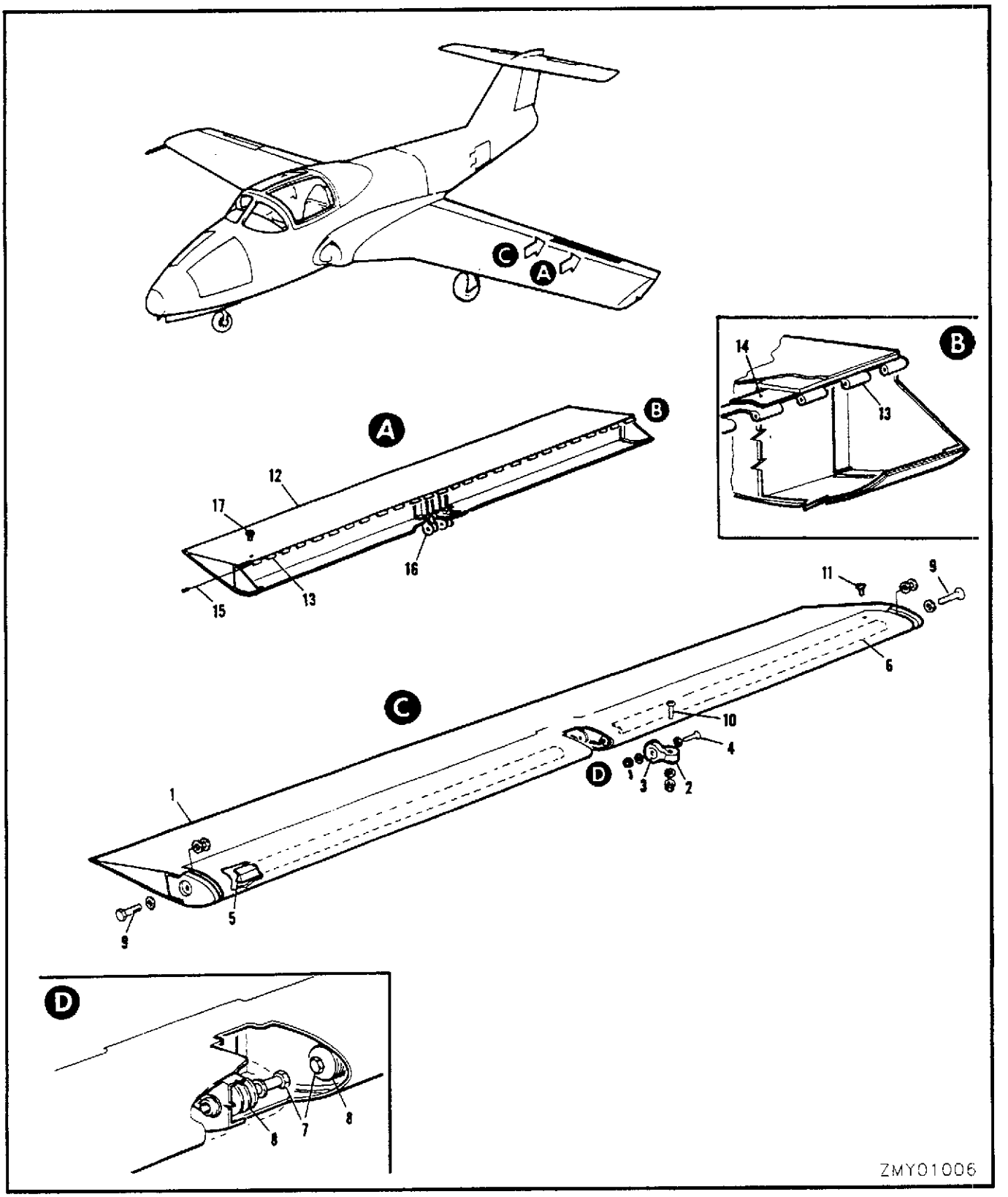

FIGURE 10 AILERON SPRING, TRIM & GEARED TABS

FIGURE AND INDEX NUMBER	GROUP	WING	EFFEC-TIVITY	UNITS PER ASSY
	MAJOR ASSEMBLY	AILERON SPRING, TRIM & GEARED TABS		
	PART NUMBER	1 2 3 4 5 6 7 NOMENCLATURE		
10 -	41A-13103-802	TAB ASSY - AILERON SPRING PORT (R) (SEE FIG. 9)		1
	41A-13103-803	TAB ASSY - AILERON SPRING STBD (R)		1
- 1	41A-13103-70	.TAB STRUCTURE ASSY - AILERON SPRING PORT (BONDED PORTION)		1
	41A-13103-71	.TAB STRUCTURE ASSY - AILERON SPRING STBD (BONDED PORTION)		1
	41A-13134	.HOUSING ASSY - AILERON SPRING TAB BEARING		1
- 2	41A-13134-2	..HOUSING - AILERON SPRING TAB BEARING		1
- 3	MS27645-3	..BEARING		1
- 4	NAS1103-11D	.BOLT		1
	AN960PD10	.WASHER		2
	AN320-3	.NUT		1
	MS24665-132	.COTTER PIN		1
- 5	41A-13103-80	.WEIGHT - (INBOARD MASS BALANCE)		1
- 6	41A-13103-78	.WEIGHT - (OUTBOARD MASS BALANCE)		1
- 7	NAS428-4-16	.BOLT		2
- 8	S1246B16-18-125	.WASHER - (V88308)		AR
	AN960PD416	.WASHER - (ADJUSTABLE BALANCE)		2
- 9	AN173H11A	.BOLT - (TAB RETAINING OUTER HINGE)		2
	AN960PD10L	.WASHER		2
	AN960PD10	.WASHER		4
-10	NAS623-4-12	.SCREW - (TAB RETAINING CENTRE HINGE)		1
	AN960PD416	.WASHER		1
	MS21042L4	.NUT		1
R -11	MS35207-261	.SCREW - (RIG BOARD PLUG)		1
	41A-13104	TAB ASSY - AILERON TRIM PORT (INTERCHANGEABLE) (SEE FIG. 9)		1
	41A-13104-2	TAB ASSY - AILERON GEAR STBD (INTERCHANGEABLE)	001-120	1
	41A-13104-800	TAB ASSY - AILERON GEAR STBD (INTERCHANGEABLE)	121-	1
-12	41A-13104-4	.TAB STRUCTURE ASSY - AILERON TRIM PORT (BONDED PORTION)		1
	41A-13104-6	.TAB STRUCTURE ASSY - AILERON GEAR STBD (BONDED PORTION)	001-120	1
	41A-13104-46	.TAB STRUCTURE ASSY - AILERON GEAR STBD (BONDED PORTION)	121-	1
-13	41A-13104-22	.HALF HINGE - (TRIM TAB PORT)		1
	41A-13104-24	.HALF HINGE - (GEAR TAB STBD)		1
-14	41A-13104-26	.SHIM - (HALF HINGE PORT)		AR
	41A-13104-28	.SHIM - (HALF HINGE STBD)		AR
-15	S1267-9-1790	.PIN ASSY - (V88308)		1
-16	41A-13132	.BRACKET - AILERON TRIM TAB LEVER PORT		1
	41A-13131	.BRACKET - AILERON TRIM TAB LEVER STBD		1
R -17	MS35207-262	.SCREW - (RIG BOARD PLUG)		1

-OOO-

SECTION 2

EMPENNAGE

TABLE OF CONTENTS

FIGURE	TITLE	PAGE
11	COMPLETE EMPENNAGE	2-02
12	VERTICAL STABILIZER & RUDDER	2-04
13	HORIZONTAL STABILIZER & ELEVATOR	2-06
14	ELEVATOR BALANCE WEIGHTS, TABS & EMPENNAGE FAIRINGS	2-10

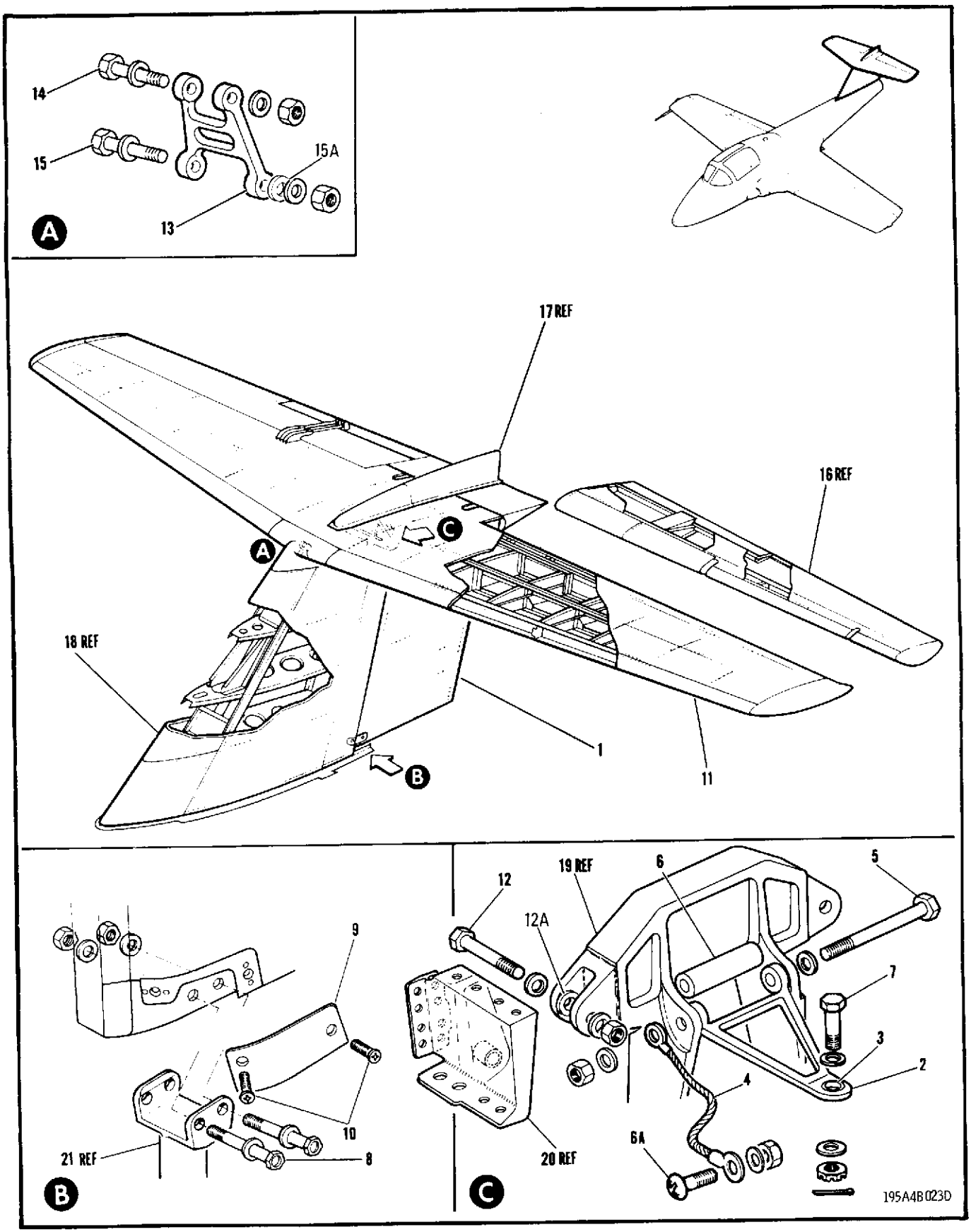

FIGURE 11 COMPLETE EMPENNAGE

	FIGURE AND INDEX NUMBER	GROUP	EMPENNAGE	EFFEC-TIVITY	UNITS PER ASSY
		MAJOR ASSEMBLY	COMPLETE EMPENNAGE		
		PART NUMBER	1 2 3 4 5 6 7 NOMENCLATURE		
	11 -	41A-20000	EMPENNAGE GENL ASSY - COMPLETE (SEE FIG. 1)		NP
	- 1	41A-22000	.RUDDER ASSY - COMPLETE (SEE FIG. 12)		REF
		41A-22021	.BRACKET ASSY - RUDDER HINGE MOUNTING OR		1
		41A-22021-952	.BRACKET ASSY - RUDDER HINGE MOUNTING		
	- 2	41A-22021-2	..BRACKET - RUDDER HINGE MOUNTING OR		1
		41A-22021-950	..BRACKET - RUDDER HINGE MOUNTING		
	- 3	MS27645-4	..BEARING		1
	- 4	MS25083-2CC7	.JUMPER ASSY		1
R	- 5	NAS6204-84	.BOLT		1
	- 6	NAS43DD4-256	.SPACER		1
		AN960D416	.WASHER		2
		MS21042L4	.NUT		1
	- 6A	NAS623-3-2	.SCREW		1
		AN960PD10L	.WASHER		1
		MS21042L3	.NUT		1
R	- 7	NAS6204-13D	.BOLT		1
		AN960D416	.WASHER		2
		AN320-4	.NUT		1
		MS24665-134	.COTTER PIN		1
R	- 8	NAS6204-50	.BOLT		2
		AN960D416	.WASHER		4
		MS21042L4	.NUT		2
	- 9	41A-22000-85	.PLATE - COVER LH (INTERCHANGEABLE)		1
		41A-22000-86	.PLATE - COVER RH (INTERCHANGEABLE)		1
	-10	MS24693-272	.SCREW		4
	-11	41A-23000-802	.STABILIZER ASSY - HORIZONTAL (SEE FIG. 13)		REF
	-12	NAS1106-24	.BOLT		2
		AN960D616	.WASHER		4
	-12A	S1246LC25-20-20	.SHIM - (V88308)		2
		MS21042L6	.NUT		2
	-13	41A-21014	.LINK - HOR/STAB FORWARD ATTACHMENT		1
	-14	NAS1106-28	.BOLT - (LINK UPPER)		1
	-15	NAS1106-46	.BOLT - (LINK LOWER)		1
		AN960D616	.WASHER		4
	-15A	S1246LC25-20-20	.SHIM - (V88308)		1
		MS21042L6	.NUT		2
	-16	41A-24001	.ELEVATOR INSTL - COMPLETE (SEE FIG. 13)		REF
	-17	41A-20004	.FAIRING INSTL - EMPENNAGE (SEE FIG. 14)		REF
	-18	41A-21000	STABILIZER ASSY - VERTICAL (SEE FIG. 12)		REF
	-19	41A-21023	FITTING ASSY - HOR/STAB ATT REAR (SEE FIG. 12)		REF
	-20	41A-23022	BRACKET ASSY - HOR/STAB ATT (SEE FIG. 13)		REF
	-21	41A-36046-2	SHAFT - RUDDER HINGE (SEE SECTION 7)		REF

-000-

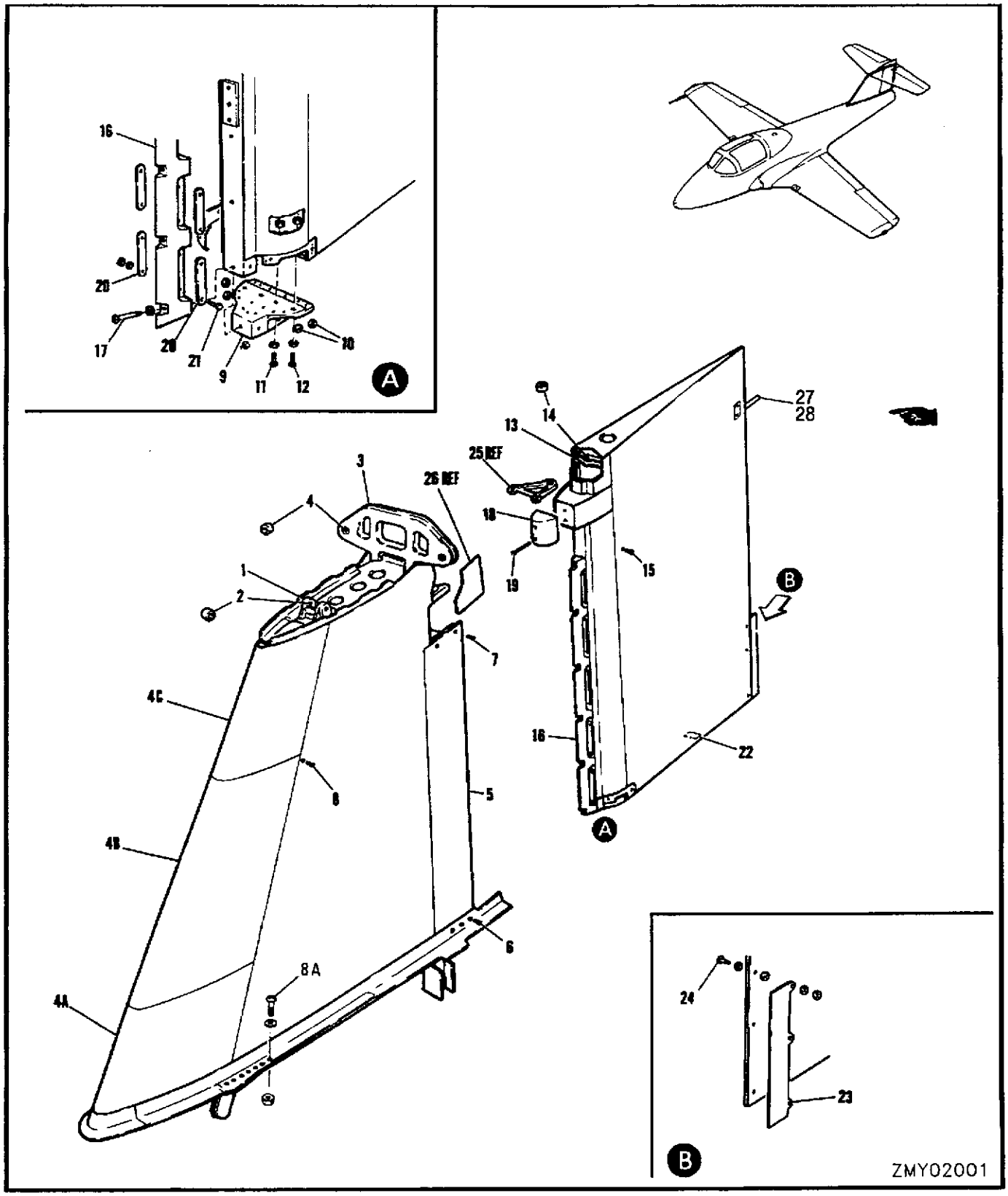

FIGURE 12 VERTICAL STABILIZER & RUBBER

FIGURE AND INDEX NUMBER	GROUP	EMPENNAGE	EFFEC-TIVITY	UNITS PER ASSY
	MAJOR ASSEMBLY	VERTICAL STABILIZER & RUBBER		
	PART NUMBER	1 2 3 4 5 6 7 NOMENCLATURE		
12 -	41A-21000	STABILIZER ASSY - VERTICAL (SEE SECTION 3)		1
	41A-21021	.BRACKET ASSY - HOR/STAB ATTACHMENT FORWARD		1
- 1	41A-21021-2	..BRACKET - HOR/STAB ATTACHMENT FORWARD		1
- 2	NAS75-6-011	..BUSHING		2
	41A-21001-4	.SPAR ASSY - VERTICAL STABILIZER REAR		1
	41A-21023	..FITTING ASSY - HOR/STAB ATTACHMENT REAR		1
- 3	41A-21023-4	...FITTING - HOR/STAB ATTACHMENT REAR (IAW C-12-114-000/CF-410)		1
- 4	NAS75-6-008	...BUSHING		4
- 4A	41A-21000-2	.SKIN - VERTICAL STABILIZER LE LOWER		1
R	MS20426AB4	.RIVET		28
R	MS20242AB5	.RIVET		14
R	MS20401AD5	.RIVET		20
- 4B	41A-21000-4	.SKIN - VERTICAL STABILIZER LE CENTRE		1
R	NAS1203-4	.SCREW - CSK		38
- 4C	41A-21000-6	.SKIN - VERTICAL STABILIZER LE UPPER		1
R	MS20426AB4	.RIVET		16
R	CCFM200-4	.BOLT - JO		14
R	CCFM200-3	.BOLT - JO		12
R	FF164426-2	.BOLT - JO		12
- 5	41A-21000-10	.SHROUD ASSY - TRAILING EDGE LH		1
	41A-21000-11	.SHROUD ASSY - TRAILING EDGE RH		1
- 6	MS24693-274	.SCREW		6
- 7	MS24693-273	.SCREW		4
- 8	MS27039-1-12	.SCREW - (RIG BOARD PLUG)		1
- 8A	NAS623-3-7	.SCREW		14
	AN960PD10	.WASHER		14
	MS21042L3	.NUT		14
	41A-22000-800	RUDDER ASSY - COMPLETE (I) (SEE FIG. 11)		1
	41A-22022	.FITTING ASSY - RUDDER HINGE LOWER		1
- 9	41A-22022-2	..FITTING - RUDDER HINGE LOWER OR		1
	41A-22022-950	..FITTING - RUDDER HINGE LOWER		
-10	NAS75-4-008	..BUSHING		4
-11	NAS623-3-12	.SCREW		2
-12	NAS623-3-9	.SCREW		2
	AN960D10L	.WASHER		4
	MS21042L3	.NUT		4
	41-22013-6	.BRACKET ASSY - RUDDER HINGE UPPER OR		1
	41-22013-952	.BRACKET ASSY - RUDDER HINGE UPPER		
-13	41-22013-8	..BRACKET - RUDDER HINGE UPPER OR		1
	41-22013-950	..BRACKET - RUDDER HINGE UPPER		
-14	NAS75-4-005	..BUSHING		2
-15	MS35207-261	.SCREW - (RIG BOARD PLUG)		1
-16	41A-22026	.WEIGHT - RUDDER BALANCE		1
-17	NAS623-4-26	.SCREW		6
	AN960PD416	.WASHER		6
	MS21042L4	.NUT		1
-18	41A-22029	.WEIGHT - RUDDER BALANCE		1
-19	NAS517-4-27	.SCREW		2
-20	41A-22030	.WEIGHT - RUDDER BALANCE ADJ		AR
-21	NAS1103-14	.BOLT		4
	AN960PD10L	.WASHER		4
	MS21042L3	.NUT		4
-22	S1043	.NAMEPLATE - (V88308)		1
-23	41A-22000-145	.TAB - RUDDER TRIM		1
-24	NAS623-2-6	.SCREW		3
	41A-22031	.WASHER - TAPERED		3
	AN960PD8L	.WASHER		6
	MS21042L08	.NUT		3
-25	41A-22021	BRACKET ASSY - RUDDER HINGE MOUNTING (SEE FIG. 11)		REF

FIGURE AND INDEX NUMBER	GROUP	EMPENNAGE	EFFEC-TIVITY	UNITS PER ASSY
	MAJOR ASSEMBLY	VERTICAL STABILIZER & RUBBER		
	PART NUMBER	1 2 3 4 5 6 7 NOMENCLATURE		
12 -				
-26	41A-20004-13	PANEL ASSY - (VERTICAL STABILIZER UPPER REAR ACCESS LH) (SEE FIG. 14)		REF
	NW4602000-1 *	STATIC DISCHARGERS INSTL (SEE SECTION 13)		REF
-27	NW4602005-1 *	.BASE		1
-28	SD1 *	.DISCHARGER - TRG (VTBD)		1
	*	IAW C-12-114-000/CD-033		
		-OOO-		

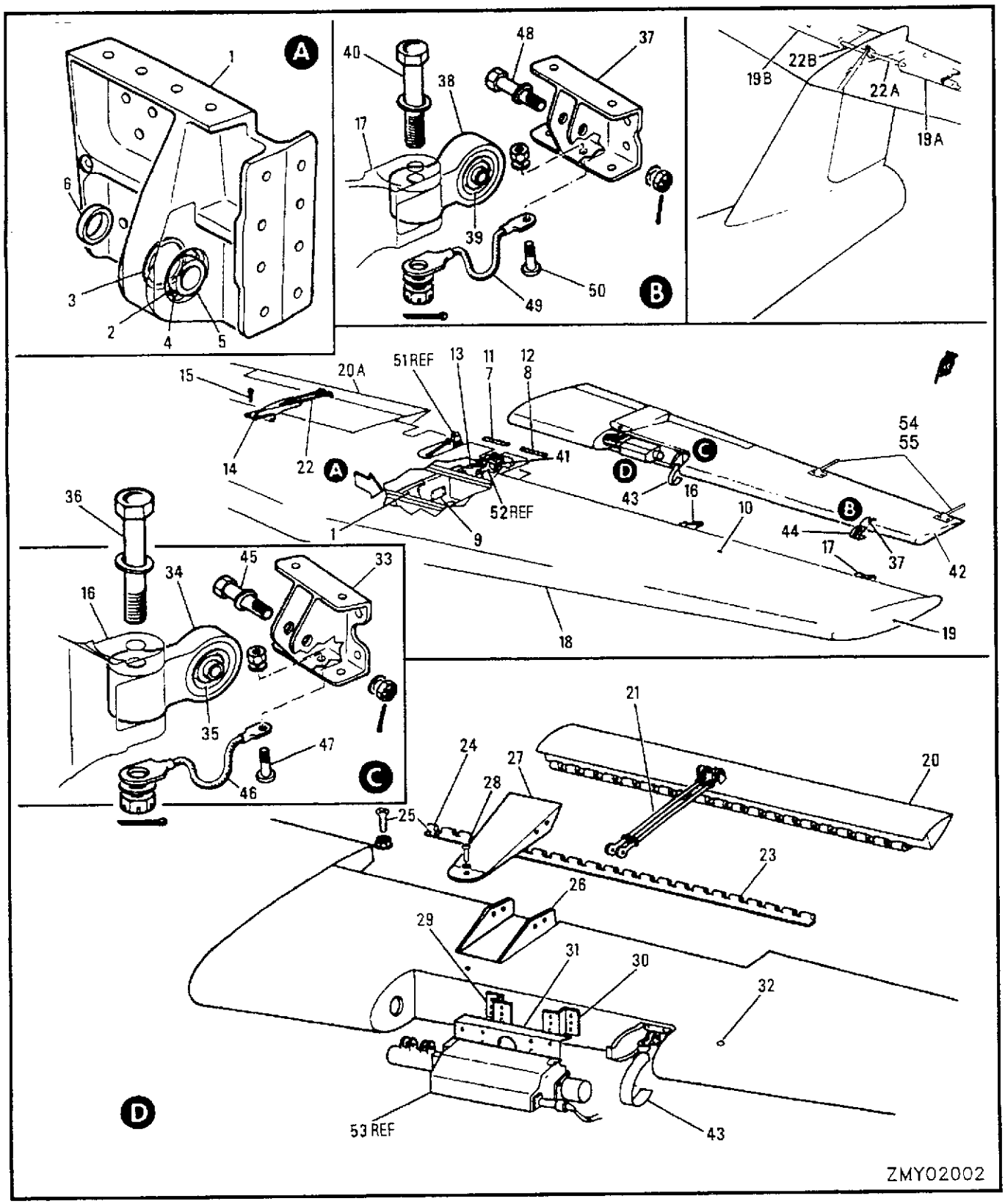

FIGURE 13 HORIZONTAL STABILIZER & ELEVATOR

FIGURE AND INDEX NUMBER	GROUP	EMPENNAGE	EFFEC-TIVITY	UNITS PER ASSY
	MAJOR ASSEMBLY	HORIZONTAL STABILIZER & ELEVATOR		
	PART NUMBER	1 2 3 4 5 6 7 NOMENCLATURE		
13 -	41A-23000-802	STABILIZER ASSY - HORIZONTAL (I) (SEE FIG. 11)		1
	41A-42127	.TRANSPORT BREAK INSTL - HORIZONTAL STABILIZER (ELEC) (SEE SECTION 12)		REF
	41A-23000-2	.PANEL ASSY - HORIZONTAL STABILIZER UPPER		1
	41A-23022	..BRACKET ASSY - HOR/STAB ATTACHMENT PORT		1
	41A-23022-1	..BRACKET ASSY - HOR/STAB ATTACHMENT STBD		1
- 1	41A-23022-2	...BRACKET - HOR/STAB ATTACHMENT PORT		1
	41A-23022-3	...BRACKET - HOR/STAB ATTACHMENT STBD		1
R - 2	KSB8SXD1	...BEARING - (V97613))		1
- 3	41A-23022-12	...SHIM - HOR/STAB ATT BRACKET BEARING		1
- 4	NAS669-100	...RING		1
- 5	41A-23014	...BUSHING - MAIN ATTACHMENT BRACKET		1
- 6	41A-23019	...COLLAR - MAIN ATTACHMENT BRACKET		1
- 7	41A-23028-30	..HALF HINGE - (PORT INNER UPPER)		1
	41A-23028-31	..HALF HINGE - (STBD INNER UPPER)		1
- 8	41A-23028-40	..HALF HINGE - (PORT OUTER UPPER)		1
	41A-23028-41	..HALF HINGE - (STBD OUTER UPPER)		1
R - 9	S1043	..NAMEPLATE - (V88308)		1
-10	AN565F428H4	..SETSCREW - (RIG BOARD PLUG)		2
	41A-23000-804	.PANEL ASSY - HORIZONTAL STABILIZER LOWER		1
-11	41A-23028-31	..HALF HINGE - (PORT INNER LOWER)		1
	41A-23028-30	..HALF HINGE - (STBD INNER LOWER)		1
-12	41A-23028-41	..HALF HINGE - (PORT OUTER LOWER)		1
	41A-23028-40	..HALF HINGE - (STBD OUTER LOWER)		1
-13	41A-23021-2	.BRACKET - HORIZONTAL STABILIZER STA 7 INBOARD HINGE (RIVETED)		2
	41A-23028-32	.SHIM - LAMINATED		4
-14	41A-23027	.BRACKET - HORIZONTAL STABILIZER GEAR TAB ANCHOR (STBD)		1
-15	MS24694-51	.SCREW		4
-16	41A-23026	.BRACKET - HORIZONTAL STABILIZER STA 42 HINGE (RIVETED)		2
-17	41A-23023	.BRACKET - HORIZONTAL STABILIZER STA 69 HINGE (RIVETED)		2
-18	41A-23033	.LEADING EDGE ASSY - HORIZONTAL STABILIZER		2
-19	41A-23034	.TIP ASSY - HORIZONTAL STABILIZER (WELDED)		2
	41A-24001	ELEVATOR INSTL - COMPLETE (SEE FIG. 11)		NP
-19A	41A-24005-802	.ELEVATOR ASSY - PORT (I)		1
-19B	41A-24005-801	.ELEVATOR ASSY - STBD (I)		1
-20	41A-24002	..TAB ASSY - ELEVATOR PORT (TRIM) (SEE FIG. 14)		REF
-20A	41A-24002-1	..TAB ASSY - ELEVATOR STDB (GEARED) (SEE FIG. 14)		REF
-21	41A-90603-800	..TAB CONTROL INSTL - ELEVATOR TRIM (PORT SIDE ONLY) (SEE SECTION 7)		REF
-22	41A-90608	..TAB CONTROL INSTL - ELEVATOR GEARED (STBD SIDE ONLY) (SEE SECTION 7)		REF
	41A-42102	..ELECTRICAL EQUIP. INSTL- REAR FUS (SEE SECTION 12)		REF
	41A-24000-800	..ELEVATOR STRUCTURE ASSY - PORT		1
	41A-24000-801	..ELEVATOR STRUCTURE ASSY - STBD		1
-22A	41A-24028-801	...TORQUE TUBE ASSY - ELEVATOR PORT (SEE SECTION 7)		REF
-22B	41A-24028-802	...TORQUE TUBE ASSY- ELEVATOR STBD (SEE SECTION 7)		REF
-23	41A-24000-118	...HALF HINGE - ELEVATOR TRIM TAB PORT		1
	41A-24000-119	...HALF HINGE - ELEVATOR TRIM TAB STBD		1
-24	41A-24000-236	...STOP - HINGE PIN PORT		1
	41A-24000-237	...STOP - HINGE PIN STBD		1
-25	MS24693CB47	...SCREW		2
	MS21042L08	...NUT		2
-26	41A-24000-300	...TRAY - (TRIM TAB CONTROL ROD PORT)		1
-27	41A-24000-302	...COVER - (TRIM TAB CONTROL ROD PORT)		1
-28	NAS623-3-1	...SCREW - (PORT)		1
	AN960PD10L	...WASHER - (PORT)		1

FIGURE AND INDEX NUMBER	GROUP	EMPENNAGE	EFFEC-TIVITY	UNITS PER ASSY
	MAJOR ASSEMBLY	HORIZONTAL STABILIZER & ELEVATOR		
	PART NUMBER	1 2 3 4 5 6 7 NOMENCLATURE		
13 - 29	41A-24000-142	...MOUNTING - (ACTUATOR SUPPORT BRACKET PORT INBOARD)		1
- 30	41A-24000-144	...MOUNTING - (ACTUATOR SUPPORT BRACKET PORT OUTBOARD)		1
	41A-24000-314	...SHIM - LAMINATED (INBD)		AR
	41A-24000-316	...SHIM - LAMINATED (OUTBD)		AR
- 31	41A-24023	...BRACKET ASSY - ACTUATOR SUPPORT (PORT)		1
- 32	MS35207-261	...SCREW - (RIG BOARD PLUG PORT)		3
	MS35207-261	...SCREW - (RIG BOARD PLUG STBD)		2
- 33	41A-24029	...BRACKET - ELEVATOR STA 42 HINGE PORT		1
	41A-24029-2	...BRACKET - ELEVATOR STA 42 HINGE STBD		1
	41A-24031	...BEARING ASSY - ELEVATOR STA 42 HINGE (I)		1
- 34	41A-24031-2	....HOUSING - ELEVATOR HINGE BEARING		1
- 35	MS27645-5	....BEARING		1
- 36	NAS1105-27D	...BOLT		1
	AN960PD516L	...WASHER - (UNDER BOLT HEAD)		1
	AN960PD516	...WASHER		1
	AN320-5	...NUT		1
	MS24665-134	...COTTER PIN		1
- 37	41A-24030	...BRACKET - ELEVATOR STA69 HINGE		1
	41A-24032	...BEARING ASSY - ELEVATOR STA 69 HINGE (I)		1
- 38	41A-24032-2	....HOUSING - ELEVATOR HINGE BEARING		1
- 39	MS27645-4	....BEARING		1
R - 40	NAS6204-23D	...BOLT		1
	AN960PD416L	...WASHER - (UNDER HEAD)		1
	AN960PD416	...WASHER		1
	AN320-4	...NUT		1
	MS24665-134	...COTTER PIN		1
- 41	S1043M	...NAMEPLATE - (V88308)		1
- 42	41A-24000-4	...TIP ASSY - ELEVATOR		1
- 43	41A-24000-96	...COVER - ELEVATOR STA 42 HINGE PORT		1
	41A-24000-98	...COVER - ELEVATOR STA 42 HINGE STBD		1
- 44	41A-24000-94	...COVER - ELEVATOR STA 69 HINGE PORT		1
	41A-24000-95	...COVER - ELEVATOR STA 69 HINGE STBD		1
- 45	NAS1105-12D	.BOLT - (ELEVATOR STA 42 HINGE)		2
	AN960PD516	.WASHER - (UNDER BOLT HEAD)		2
	AN960PD516L	.WASHER		2
	AN320-5	.NUT		2
	MS24665-134	.COTTER PIN		2
- 46	MS25083-2BD4	.JUMPER ASSY		2
- 47	NAS623-3-3	.SCREW		2
	AN960PD10	.WASHER		2
	MS21042L3	.NUT		2
R - 48	NAS6204-11D	.BOLT - (ELEVATOR STA 69 HINGE)		2
	AN960PD416L	.WASHER - (UNDER BOLT HEAD)		2
	AN960PD416	.WASHER		2
	AN320-4	.NUT		2
	MS24665-134	.COTTER PIN		2
- 49	MS25083-2BC4	.JUMPER ASSY		2
- 50	NAS623-3-3	.SCREW		2
	AN960PD10	.WASHER		2
	MS21042L3	.NUT		2
- 51	41A-90555	LEVER - ELEVATOR CONTROL (SEE SECTION 7)		REF
- 52	41-24022	BEARING ASSY - ELEVATOR INBOARD HINGE (SEE SECTION 7)		REF
- 53	R422M25-1	ACTUATOR ASSY - ELEVATOR TRIM TAB (SEE SECTION 7)		REF
	NW4602000-1 *	STATIC DISCHARGERS INSTL (SEE SECTION 13)		REF
- 54	NW4602005-1 *	.BASE		4
- 55	SD1 *	.DISCHARGER - TRG (VTBD)		4
	*	IAW C-12-114-000/CD-033		
		-OOO-		

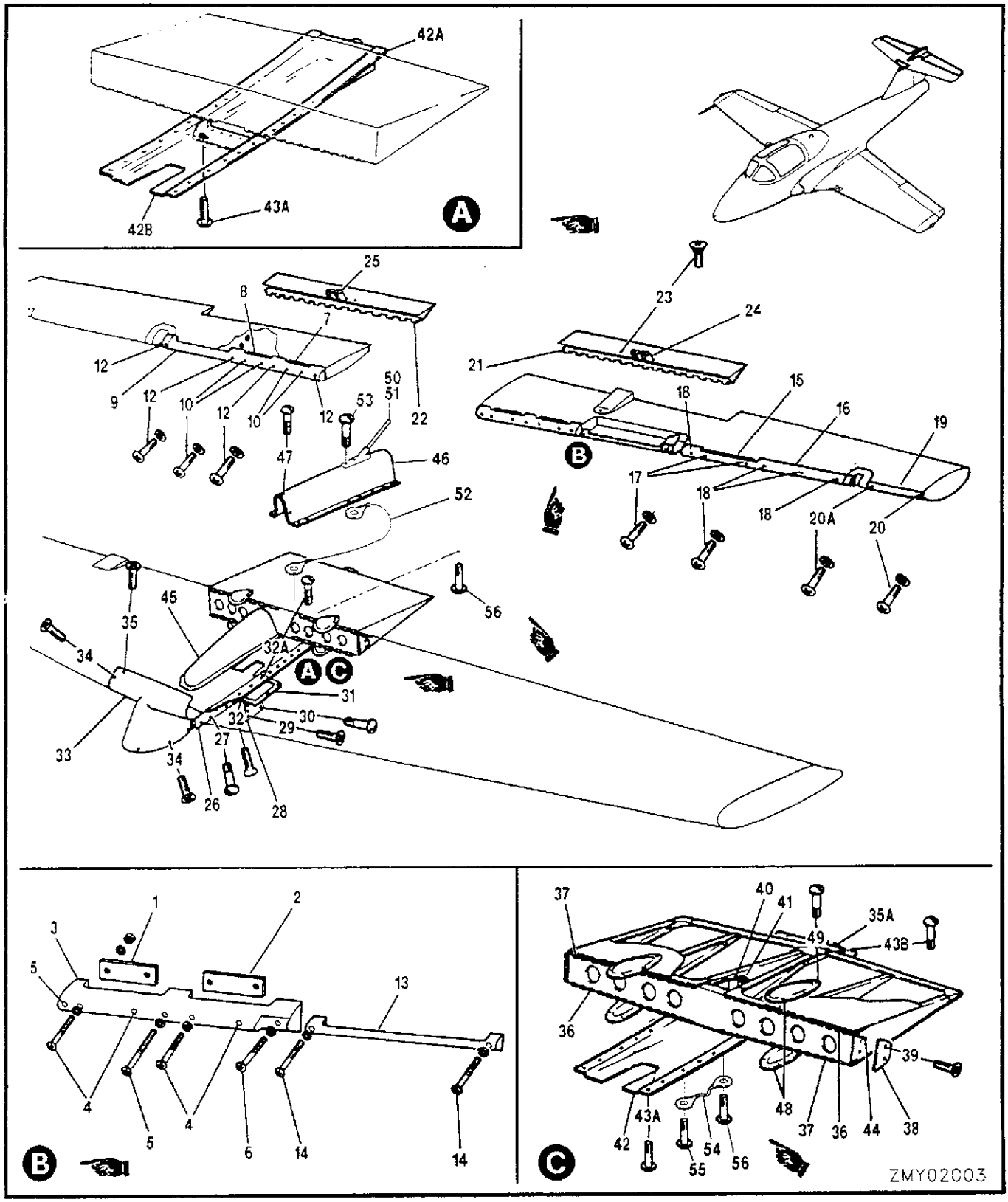

FIGURE 14 ELEVATOR BALANCE WEIGHTS, TABS & EMPENNAGE FAIRINGS

	FIGURE AND INDEX NUMBER	GROUP	EMPENNAGE	EFFEC-TIVITY	UNITS PER ASSY
		MAJOR ASSEMBLY	ELEVATOR BALANCE WEIGHTS, TABS & EMPENNAGE FAIRINGS		
		PART NUMBER	1 2 3 4 5 6 7 NOMENCLATURE		
	14 -	41A-24000	ELEVATOR STRUCTURE ASSY - (SEE FIG. 13)		REF
		41A-24000-284	.LEADING EDGE ASSY - ELEVATOR STA 13-27 (PORT)		1
	- 1	41A-24040-22	..WEIGHT - BALANCE		AR
	- 2	41A-24040-24	..WEIGHT - BALANCE		AR
	- 3	41A-24040-16	..WEIGHT - BALANCE		1
	- 4	NAS623-3-15	..SCREW		4
R		S1246AB13-12-16	..WASHER - (V88308) (UNDER BOLT HEAD)		4
		AN960PD10	..WASHER		AR
		MS21042L3	..NUT		4
	- 5	NAS623-3-17	..SCREW		2
	- 6	NAS623-3-19	..SCREW		1
R		S1246AB13-12-16	..WASHER - (V88308)		3
		41A-24000-283	.LEADING EDGE ASSY - ELEVATOR STA 13-41 (STBD)		1
	- 7	41A-24040-26	..WEIGHT - BALANCE		AR
	- 8	41A-24040-28	..WEIGHT - BALANCE		AR
	- 9	41A-24040-20	..WEIGHT - BALANCE		1
	-10	NAS623-3-15	..SCREW		4
R		S1246AB13-12-16	..WASHER - (V88308)		4
		AN960PD10	..WASHER		AR
		MS21042L3	..NUT		4
	-11		DELETED		
	-12	NAS623-3-17	..SCREW		4
R		S1246AB13-12-16	..WASHER - (V88308)		4
		41A-24000-318	.COVER ASSY - ELEVATOR STA 27-41 ACTUATOR (PORT) (R)		1
	-13	41-24027-2	..WEIGHT - ELEVATOR BALANCE		1
	-14	NAS623-3-6	..SCREW		2
R		S1246AB13-12-16	..WASHER - (V88308)		2
		41A-24000-282	.LEADING EDGE ASSY - ELEVATOR STA 42-69		1
	-15	41A-24040-30	..WEIGHT - BALANCE		AR
	-16	41A-24040-18	..WEIGHT - BALANCE		1
	-17	NAS623-3-15	..SCREW		2
	-18	NAS623-3-17	..SCREW		4
R		S1246AB13-12-16	..WASHER - (V88308)		6
		41A-24000-148	.LEADIN EDGE ASSY - ELEVATOR STA 70-78		1
	-19	41A-24040-8	..WEIGHT - BALANCE		1
	-20	NAS623-3-16	..SCREW		1
	-20A	NAS623-3-17	..SCREW		1
R		S1246AB13-12-16	..WASHER - (V88308)		2
		41A-24002	TAB ASSY - ELEVATOR PORT (TRIM) (I) (SEE FIG. 13)		1
		41A-24002-1	TAB ASSY - ELEVATOR STBD (GEARED) (I)		1
	-21	41A-24002-14	.HALF HINGE - ELEVATOR TAB PORT		1
	-22	41A-24002-15	.HALF HINGE - ELEVATOR TAB STBD		1
R	-23	MS35207-260	.SCREW - (RIG BOARD PLUG)		1
	-24	41A-24037	.FITTING - ELEVATOR STA 28 TRIM TAB ACTUATION (PORT)		1
	-25	41A-24038	.FITTING - ELEVATOR STA 28 GEARED TAB ACTUATION (STBD)		1
		41A-20004	FAIRING INSTL - EMPENNAGE (SEE FIG. 11)		NP
	-26	41A-20004-28	.FAIRING - (HORIZONTAL STABILIZER FORWARD LOWER LH)		1
		41A-20004-27	.FAIRING - (HORIZONTAL STABILIZER FORWARD LOWER RH)		1
	-27	MS27039-1-07	.BOLT		8
		41A-20004-13	.PANEL ASSY - (VERTICAL STABILIZER UPPER REAR ACCESS LH) (I)		1
		41A-20004-14	.PANEL ASSY - (VERTICAL STABILIZER UPPER REAR ACCESS RH) (I)		1
	-28	41A-20004-82	..PANEL - (VERT/STAB ACCESS LH)		1
		41A-20004-83	..PANEL - (VERT/STAB ACCESS RH)		1
	-29	NAS1203-2	.BOLT		8
	-30	MS27039-1-07	.SCREW		4

FIGURE AND INDEX NUMBER	GROUP	EMPENNAGE	EFFEC-TIVITY	UNITS PER ASSY
	MAJOR ASSEMBLY	ELEVATOR BALANCE WEIGHTS, TABS & EMPENNAGE FAIRINGS		
	PART NUMBER	1 2 3 4 5 6 7 NOMENCLATURE		
14 -	41A-20004-809	.PANEL ASSY - (HORIZONTAL STABILIZER LOWER ACCESS PORT) (I)		1
	41A-20004-808	.PANEL ASSY - (HORIZONTAL STABILIZER LOWER ACCESS STBD) (I)		1
-31	41A-20004-113	..PANEL ASSY - (HOR/STAB LOWER ACCESS LH)		1
	41A-20004-112	..PANEL ASSY - (HOR/STAB LOWER ACCESS RH)		1
-32	NAS1203-2	.BOLT		12
-32A	MS27039-1-06	.SCREW		6
-33	41A-20004-6	.FAIRING - (HORIZ & VERT/STAB NOSE) (I)		1
-34	MS24693-271	.SCREW		12
-35	NAS1203-4	.BOLT		14
	A3235-020-24A	.WASHER - (V78533)		26
	41A-20004-806	.FAIRING ASSY - (HORIZ STABILIZER AFT) (I)		1
-35A	41A-42102-4	..ELECTRICAL EQUIP INSTL - EMPENNAGE (SEE SECTION 12)		REF
	41A-20004-804	..FAIRING ASSY - (HORIZ STABILIZER AFT) (I)		1
	41A-20005-800	...FAIRING ASSY - (HOR/STAB TRAILING EDGE)		1
-36	41A-20005-10	....HALF HINGE - (PORT UPPER & STBD LOWER)		2
-37	41A-20005-12	....HALF HINGE - (PORT LOWER & STBD UPPER)		2
-38	41A-20005-30	....LOCKPLATE - HINGE		2
-39	MS24693-270	....SCREW		4
-40	41A-20005-46	....BRACKET - ELEVATOR DOWN SPRING LH		1
	41A-20005-47	....BRACKET - ELEVATOR DOWN SPRING RH		1
	41A-20005-48	....PACKING - ELEVATOR DOWN SPRING BRACKET		1
-41	41A-20005-50	....BEARING - (MADE FROM FF207-2 (V70417)		2
-42		DELETED		
-42A	41A-20004-66	...FAIRING ASSY - (HOR/STAB REAR LOWER)		1
	41A-20004-62	....FAIRING		1
	41A-20004-64	....BUTTSTRAP		1
-42B	41A-20004-60	.FAIRING - (HORIZONTAL STAB AFT LOWER)		1
-43		DELETED		
-43A	MS27039-1-07	.SCREW		14
-43B	MS27039-1-09	.SCREW		2
-44	S1267-9W1290	.PIN - (V88308) (TRAILING EDGE FAIRING)		4
-45	41A-20004-8	.FAIRING ASSY - (VERT STABILIZER FWD) (R)		1
-46	41A-20004-2	.FAIRING - (VERTICAL STABILIZER AFT) (I)		1
-47	MS27039-1-07	.SCREW - (REAR FAIRING)		17
-48	41A-20004-32	.FAIRING - (HORIZONTAL STABILIZER STA 7)		4
-49	MS27039-1-07	.SCREW - (HOR/STAB STA 7 FAIRING)		20
R	NW4602000-1 *	STATIC DISCHARGERS INSTL (SEE SECTION 13)		REF
R -50	B3 *	.BASE (VTBD)		1
R -51	SD1 *	.DISCHARGER - TRG (VTBD)		1
R -52	MS25083-2AB8 *	.JUMPER ASSY		1
R -53	MS35206-217 *	.SCREW		2
R	AN960JD4L *	.WASHER		3
R	MS35338-40 *	.WASHER		2
R	MS21042-04 *	.NUT		2
R	NW4602000-3 *	.SPACER		1
R -54	MS25083-2BB6 *	.JUMPER ASSY		1
R -55	MS35206-263 *	.SCREW		2
R -56	MS35206-264 *	.SCREW		1
R	AN960JD10L *	.WASHER		3
R	AN960-10L *	.WASHER		7
R	MS35338-43 *	.WASHER		3
R	MS21042-3 *	.NUT		2
R	*	IAW C-12-114-000/CD-033		

-OOO-

SECTION 3

FUSELAGE

TABLE OF CONTENTS

FIGURE	TITLE	PAGE
15	COMPLETE FORWARD FUSELAGE	3-02
16	FORWARD FUSELAGE STRUCTURE	3-04
17	NOSE FUSELAGE STRUCTURE	3-08
18	NOSE FUSELAGE DOORS	3-12
19 (1 OF 2)	CENTRE FUSELAGE & ENGINE MOUNTINGS	3-16
19 (2 OF 2)	CENTRE FUSELAGE & ENGINE MOUNTINGS	3-18
20 (1 OF 2)	CENTRE FUSELAGE	3-20
20 (2 OF 2)	CENTRE FUSELAGE	3-22
21 (1 OF 2)	COCKPIT STRUCTURE & FLOOR	3-26
21 (2 OF 2)	COCKPIT STRUCTURE & FLOOR	3-28
22	COCKPIT DOORS, STEP & WINDSHIELD	3-32
23	FUSELAGE TO WING FAIRINGS	3-36
24	CANOPY & FAIRING	3-40
25	CANOPY OPERATING & JETTISON MECHANISM	3-44
26	CANOPY HINGE MECHANISM	3-46
27	CANOPY OPERATING LINKAGE	3-48
28	CANOPY LOCK	3-50
29	CANOPY MANUAL OPERATING CRANK & FLEXIBLE DRIVE	3-52
30	CANOPY JETTISON MECHANISM	3-56
31	CANOPY EMERGENCY JETTISON MECHANISM	3-60
32	CENTRE FUSELAGE ACCESS DOORS	3-64
33	AFT FUSELAGE & JOINT ATTACHMENT	3-68
34	AFT FUSELAGE STRUCTURE	3-70
35	AFT FUSELAGE SPEED BRAKES	3-74
36	DELETED	3-76

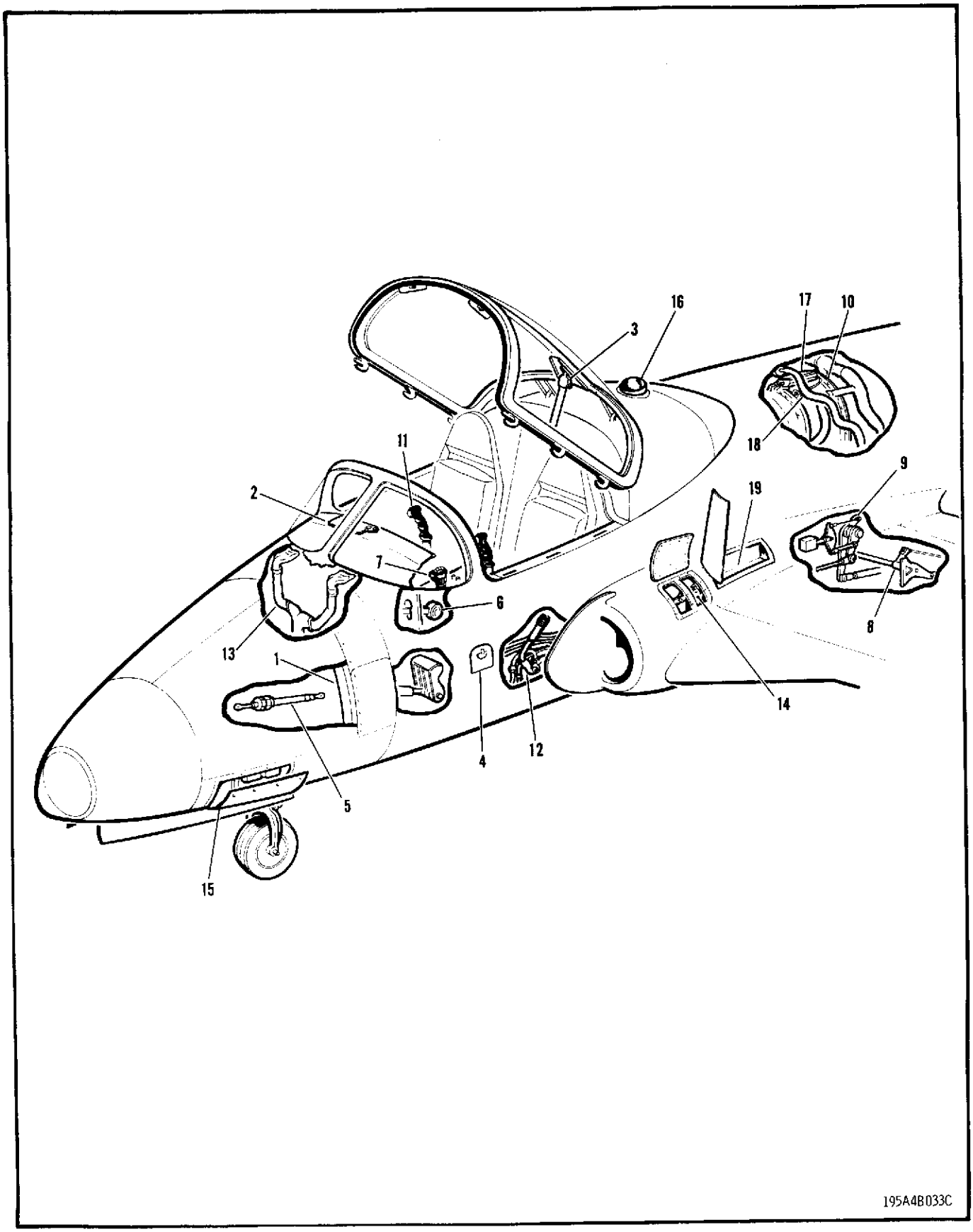

FIGURE 15 COMPLETE FORWARD FUSELAGE

FIGURE AND INDEX NUMBER	GROUP / MAJOR ASSEMBLY	FUSELAGE / COMPLETE FORWARD FUSELAGE	EFFECTIVITY	UNITS PER ASSY
	PART NUMBER	1 2 3 4 5 6 7 NOMENCLATURE		
15 -	41A-35001	FUSELAGE GENL ASSY - COMPLETE FORWARD (I) (SEE FIG. 1)		1
- 1	41A-35002	.FUSELAGE STRUCTURE GENL ASSY - FORWARD (SEE FIG. 16)		REF
- 2	41A-42200	.COCKPIT EQUIP. INSTL - (SEE SECTION 12)		REF
- 3	41A-92002	.OPERATING MECHANISM INSTL - CANOPY (SEE FIG. 25)		REF
- 4	41A-92090	.JETTISON MECH INSTL - CANOPY EMERGENCY (SEE FIG. 31)		REF
- 5	41A-90370	.STEERING INSTL - NOSE WHEEL (SEE SECTION 4)		REF
	41A-90006	.FLAP CONTROL & POWER INSTL - ACCESSORY		NP
- 6	41A-90020	..VALVE CONTROL INSTL - LANDING GEAR EMERGENCY (SEE SECTION 8)		REF
- 7	41A-90751	..POWER & FLAP CONTROL INSTL - (SEE SECTION 7)		REF
- 8	41A-90852	..INTERCONNECT INSTL - FLAP (SEE SECTION 7)		REF
- 9	41A-90851	..FOLLOW UP SYS MECH INSTL - FLAP (SEE SECTION 7)		REF
-10	41A-44000	.POWER PLANT INSTL - COMPLETE (SEE SECTION 5)		REF
	41A-65000-2	.FUEL SYS INSTL - FORWARD FUSELAGE (SEE SECTION 6)		REF
-11	41A-90004	.FLIGHT CONTROLS INSTL - FORWARD FUSELAGE (SEE SECTION 7)		REF
-12	41A-42300	.HYDRAULIC SYS INSTL - FORWARD FUSELAGE (SEE SECTION 8)		REF
-13	41A-42000	.AIR CONDITIONING SYS INSTL - COMPLETE (SEE SECTION 9)		REF
-14	41A-49051	.OXYGEN SYS INSTL - (SEE SECTION 11)		REF
-15	41A-42100	.ELECTRICAL & ELECTRONIC EQUIP. INSTL - NOSE SECTION (SEE SECTION 12)		REF
-16	41A-42101	.ELECTRICAL & ELECTRONIC EQUIP. INSTL - CENTRE FUSELAGE (SEE SECTION 12)		REF
-17	41A-42105	.ELECTRICAL EQUIP. INSTL - POWER PLANT (SEE SECTION 12)		REF
-18	41A-99000	.COOLING INSTL - ZONE 1 & 2 & GENERATOR (SEE SECTION 5)		REF
	41A-42125	.LINE INSTL - COCKPIT AREA PITOT STATIC (SEE SECTION 15)		REF
-19	41A-41565	.LINER INSTL - STOWAGE FAIRING (SEE FIG. 23)		REF

-000-

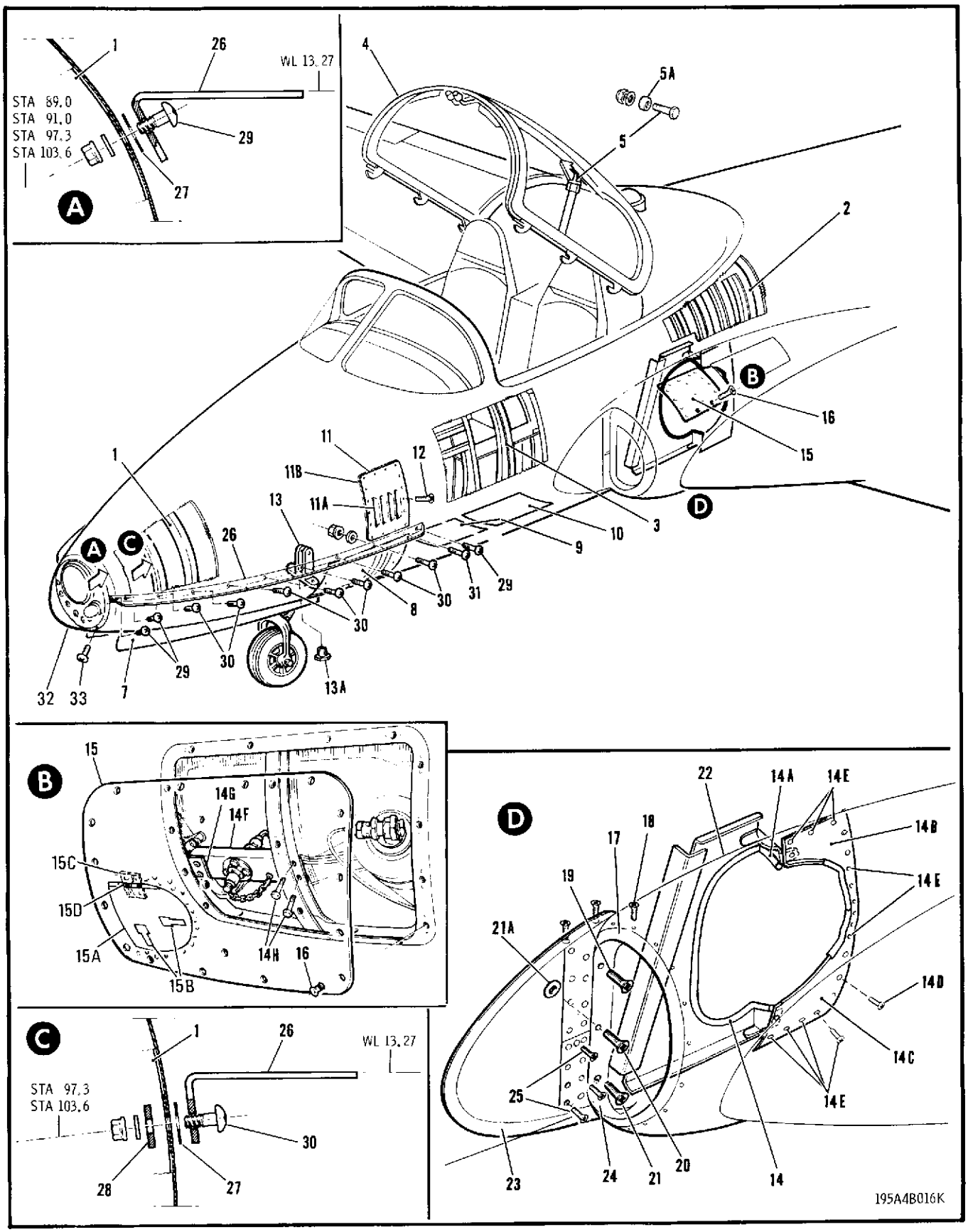

FIGURE 16 FORWARD FUSELAGE STRUCTURE

FIGURE AND INDEX NUMBER	GROUP	FUSELAGE	EFFEC-TIVITY	UNITS PER ASSY
	MAJOR ASSEMBLY	FORWARD FUSELAGE STRUCTURE		
	PART NUMBER	1 2 3 4 5 6 7 NOMENCLATURE		
16 -	41A-35002	FUSELAGE STRUCTURE GENL ASSY - FORWARD (I) (SEE FIG. 15)		1
- 1	41A-35003	.FUSELAGE STRUCTURE GENL ASSY - NOSE (SEE FIG. 17)		REF
- 2	41A-35004	.FUSELAGE GENL ASSY - CENTRE (SEE FIG. 19)		REF
- 3	41A-35007	.COCKPIT GENL ASSY - FUSELAGE (SEE FIG. 21)		REF
- 4	41A-35005-806	.CANOPY ASSY - COCKPIT (SEE FIG. 24)		REF
- 5	NAS464P5A20	.BOLT - (ACTUATOR TO CANOPY)		1
- 5A	41A-35095	.DISTANCE PIECE - CANOPY ACTUATOR ATT		1
	AN960PD516	.WASHER		1
	MS21042L5	.NUT		1
- 6		DELETED		
- 7	41A-35125-800	.DOOR ASSY - NOSE LDG/GR LH (SEE SECTION 4)		REF
	41A-35002-950	.PLATE - (FILLER)		AR
R	NAS6204-10	.BOLT		4
	AN960PD416	.WASHER		4
	MS21042L4	.NUT		4
- 8	41A-35121-800	.DOOR ASSY - FUSELAGE STA 132-149 BATTERY (SEE FIG. 18)		REF
- 9	41A-35110	.DOOR INSTL - FUSELAGE STA 149-177 ACCESS (SEE FIG. 18)		REF
-10	41A-35092	.DOOR INSTL - FUS STA 177 TO REAR PRESSURE BULKHEAD ACCESS (SEE FIG. 18)		REF
-11	41A-42019	.PANEL ASSY - INVERTER ACCESS LH		1
	41A-42019-1	.PANEL ASSY - INVERTER ACCESS RH		1
-11A	41A-42018	..BAFFLE ASSY - NOSE FUSELAGE LH		1
	41A-42018-1	..BAFFLE ASSY - NOSE FUSELAGE RH		1
-11B	NO NUMBER	..SCREEN - (AL MESH 12X12X.023 (DRW) (IAW C-12-114-000/CF-258)		1
-12	NAS517-3-1	.SCREW		32
	41A-35101	.FITTING INSTL - NOSE JACKING		NP
-13	41A-35100	..FITTING - NOSE JACKING		1
	41A-35101-4	..SHIM - NOSE JACKING FITTING		AR
-13A	41A-35204	..PLUG - JACKING POINT BOLT		1
	MS35338-48	..LOCK WASHER		1
	41A-35009	.NOSE CASTING, FAIRING & SPLITTER INSTL-PORT		NP
	41A-35009-1	.NOSE CASTING, FAIRING & SPLITTER INSTL-STBD		NP
	41A-35162	..SEALING INSTL - ENGINE INTAKE DUCT LH		NP
	41A-35162-1	..SEALING INSTL - ENGINE INTAKE DUCT RH		NP
	41A-35162-2	...SEALING ASSY - ENGINE INTAKE DUCT LH		1
	41A-35162-3	...SEALING ASSY - ENGINE INTAKE DUCT RH		1
-14	41A-35162-14	....SEAL - LH		1
	41A-35162-15	....SEAL - RH		1
	41A-35162-4	...SEALING ASSY - DIAPHRAGM LH		1
	41A-35162-5	...SEALING ASSY - DIAPHRAGM RH		1
-14A	41A-35162-16	....SEAL - LH		1
	41A-35162-17	....SEAL - RH		1
	41A-35168	..PLATE INSTL - ENG INTAKE DUCT SEALING LH		NP
	41A-35168-1	..PLATE INSTL - ENG INTAKE DUCT SEALING RH		NP
-14B	41A-35168-2	...PLATE ASSY - UPPER SEAL LH		1
	41A-35168-3	...PLATE ASSY - UPPER SEAL RH		1
-14C	41A-35168-4	...PLATE ASSY - LOWER SEAL LH		1
	41A-35168-5	...PLATE ASSY - LOWER SEAL RH		1
-14D	NAS623-3-2	...SCREW		11
-14E	NAS623-3-3	...SCREW		9
	41A-35120	..FAIRING ASSY - DUCT LH (I)		1
	41A-35120-1	..FAIRING ASSY - DUCT RH (I)		1

	FIGURE AND INDEX NUMBER	GROUP: FUSELAGE MAJOR ASSEMBLY: FORWARD FUSELAGE STRUCTURE PART NUMBER		1 2 3 4 5 6 7 NOMENCLATURE	EFFEC-TIVITY	UNITS PER ASSY
	16 -14F	NO NUMBER	*	...BRACKET - OXYGEN CHARGING VALVE SPRT(LH)		1
	-14G	NO NUMBER	*	...BRACKET - ATTACHMENT (LH)		1
	-14H	AN3-3A	*	...BOLT - (LH)		6
		AN960PD10	*	...WASHER - (LH)		6
	-15	41A-35120-68	**	...DOOR ASSY - DUCT FAIRING ACCESS LH		1
		41A-35120-69		...DOOR - DUCT FAIRING ACCESS RH (I)		1
	-15A	NO NUMBER	**	....DOOR ASSY - OXYGEN FILLER (LH)		1
	-15B	H5000-081-125	**	.....LATCH - (HAS) (LH)		1
	-15C	MS20001P3-7200	**	.....HINGE - (LH)		1
R	-15D	S1440	**	.....SPRING - (V88308) (LH)		1
	-16	NAS1203-2		...BOLT		19
	-17	41A-35064		..NOSE CASTING ASSY - AIR INTAKE LH	001-094	1
		41A-35064-4		..NOSE CASTING ASSY - AIR INTAKE LH	095-	1
		41A-35064-1		..NOSE CASTING ASSY - AIR INTAKE RH	001-094	1
		41A-35064-5		..NOSE CASTING ASSY - AIR INTAKE RH	095-	1
	-18	NAS1203-3		..BOLT - (CASTING & FAIRING)		40
	-19	NAS1204-32		..BOLT - (NOSE CASTING UPPER)		1
	-20	NAS1204-26		..BOLT - (NOSE CASTING CE		1
	-21	NAS1204-29		..BOLT - (NOSE CASTING LOWER)		1
R	-21A	S1246LS17-16-32		..WASHER - (V88308)		AR
		AN960PD416		..WASHER		3
		MS21042L4		..NUT		3
		41A-35114		..SPLITTER INSTL - AIR INTAKE PORT		NP
		41A-35114-1		..SPLITTER INSTL - AIR INTAKE STBD		NP
	-22	41A-35114-2		...SKIN ASSY - SPLITTER R		1
		41A-35114-3		...SKIN ASSY - SPLITTER REAR UPPER RH (I)		1
	-23	41A-35114-4		...SKIN ASSY - SPLITTER REAR LOWER LH (I)		1
		41A-35114-5		...SKIN ASSY - SPLITTER REAR LOWER RH (I)		1
	-24	NAS1203-4		...BOLT		8
	-25	NAS1203-2		...BOLT		13
		41A-35203		.STRAKE INSTL - NOSE LH		NP
		41A-35203-1		.STRAKE INSTL - NOSE RH		NP
	-26	41A-35203-2		..ANGLE - LH (NOSE STRAKE)		1
		41A-35203-3		..ANGLE - RH (NOSE STRAKE)		1
	-27	41A-35203-4		..PACKING - (NOSE STRAKE)		4
	-28	41A-35203-6		..WASHER - SHOULDER (NOSE STRAKE)		2
	-29	NAS623-3-3		..BOLT		3
	-30	NAS623-3-4		..BOLT		7
	-31	NAS623-3-5		..BOLT		1
R		S1242AL13-19-16		..WASHER - (V88308)		1
R		S1242AL13-19-32		..WASHER - (V88308)		AR
		AN960PD10L		..WASHER		11
		MS21042L3		..NUT		11
		41A-52018	**	ANTENNA INSTL - GLIDE SLOPE (NOSE) (SEE SECTION 13)		REF
		41A-35010		.NOSE CAP INSTL		NP
	-32	41A-35010-12		..NOSE ASSY - (I) (TRANSPARENT)		1
	-33	NAS1203-9		..SCREW		10

-OOO-

* AS PER C-12-114-000/CF-252
** AS PER C-12-114-000/CF-364
*** AS PER C-12-114-000/CD-031

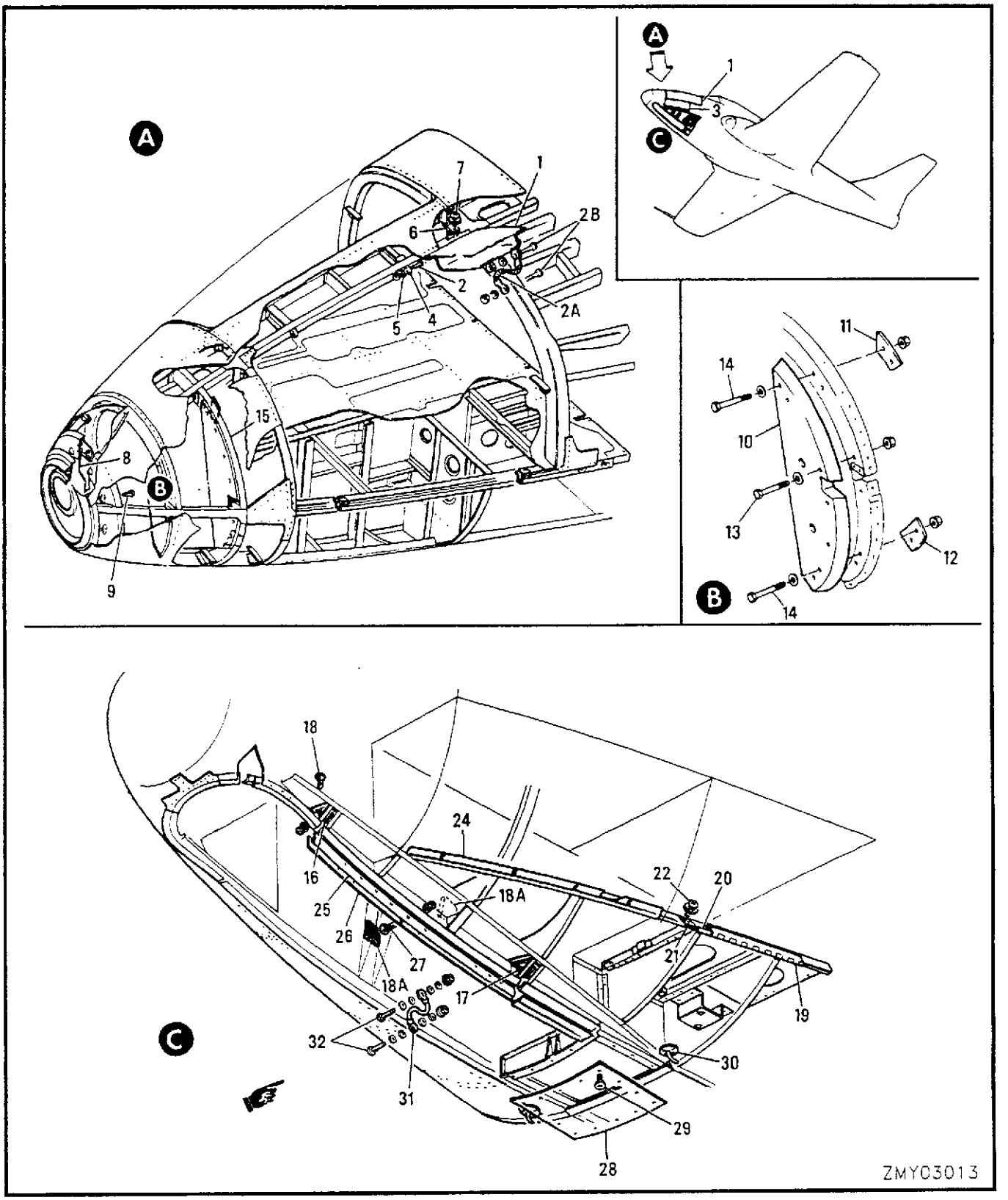

FIGURE 17 NOSE FUSELAGE STRUCTURE

FIGURE AND INDEX NUMBER	GROUP		FUSELAGE	EFFEC-TIVITY	UNITS PER ASSY
	MAJOR ASSEMBLY		NOSE FUSELAGE STRUCTURE		
	PART NUMBER		1 2 3 4 5 6 7 NOMENCLATURE		
17 -	41A-35003		FUSELAGE STRUCTURE GENL ASSY - NOSE (SEE FIG. 16)		1
- 1	41A-35126-804		.DOOR ASSY - NOSE FUSELAGE EQUIPMENT (SEE FIG. 18)		REF
- 2	MS20392-3C25		.PIN		4
	AN960D416		.WASHER		12
	MS24665-132		.COTTER PIN		4
- 2A	NO NUMBER	*	.WIRE ROPE ASSY - (DOOR LANDING)		2
	CF-T-75	*	..LUG TERMINAL		2
	NO NUMBER	*	..SLEEVE - INSULATING		1
- 2B	NAS623-3-4		.SCREW		4
	AN960D10L		.WASHER		4
	MS21042L3		.NUT		4
- 3	41A-35116		.DOOR ASSY - RELAY PANEL ACCESS (SEE FIG. 18)		REF
	41A-35158-82		.BEAM ASSY - FORWARD FUSELAGE UPPER		1
	41A-35158-84		..FITTING ASSY - (FS 117 & 132 DOOR HINGE)		2
- 4	41A-35158-32		...FITTING		1
R - 5	MS14104-4		...BEARING - (V83086)		2
- 6	41A-35127-74		.BRACKET - (FUSELAGE STA 140)		1
- 7	NAS623-3-2		.SCREW		2
	AN960D10L		.WASHER		2
	41A-35022		.FRAME ASSY - FUSELAGE STA 91		1
- 8	41A-35022-14		..SHIELD ASSY - FUS STA 91 FRAME (I)		1
- 9	AN3-3A		..BOLT		10
	41A-35023		.FRAME ASSY - FUS STA 97 (IAW C-12-114-000/CD-031)		1
-10	41A-35023-12	**	..PLATE - BALANCE LH		1
	41A-35023-13	**	..PLATE - BALANCE RH		1
-11	41A-35023-16	**	..PLATE - UPPER		2
-12	41A-35023-14	**	..PLATE - LOWER		2
-13	AN4-11A	**	..BOLT		6
-14	AN4-12A	**	..BOLT		8
	AN960PD416	**	..WASHER		14
	MS21042L4	**	..NUT		14
-15	41A-35024-800		.FRAME ASSY - FUSELAGE STA 103 LH	001-010	1
	41A-35024-2		.FRAME ASSY - FUSELAGE STA 103 LH	011-	1
	41A-35024-801		.FRAME ASSY - FUSELAGE STA 103 RH	001-010	1
	41A-35024-3		.FRAME ASSY - FUSELAGE STA 103 RH	011-	1
-16	41A-35112		.BRACKET - NOSE FUS STRUCTURE HINGE		2
-17	41A-35113		.BRACKET - NOSE FUS STRUCTURE HINGE		2
-18	NAS623-3-4		.SCREW		16
	AN960D10L		.WASHER		16
	MS21042L3		.NUT		16
	41A-35070		.KEEL INSTL - NOSE STRUCTURE		NP
	41A-35070-68		..KEEL ASSY - NOSE STRUCTURE LH		1
	41A-35070-69		..KEEL ASSY - NOSE STRUCTURE RH		1
-18A	41A-35070-70		...PAD - RUBBER (CEMENTED)		1
	41A-35127-16		.LONGERON ASSY - LH (BATTERY FLOOR)		1
	41A-35127-17		.LONGERON ASSY - RH (BATTERY FLOOR)		1
-19	41A-35127-54		..HALF HINGE - LH (BATTERY DOOR)		1
	41A-35127-55		..HALF HINGE - RH (BATTERY DOOR)		1
R -20	S1267-9-850		..PIN ASSY - (V88308)		1
-21	41A-35127-76		..STOP - HINGE LH		1
	41A-35127-77		..STOP - HINGE RH		1
		*	IAW C-12-114-000/CF-441		
		**	AS REQD FOR C OF G CORRECTION, PARTS HELD AT MOOSE JAW AND AMDU/MT VIEW		

	FIGURE AND INDEX NUMBER	GROUP / MAJOR ASSEMBLY / PART NUMBER		FUSELAGE / NOSE FUSELAGE STRUCTURE / 1 2 3 4 5 6 7 NOMENCLATURE	EFFEC-TIVITY	UNITS PER ASSY
	17 -22	MS27039-1-09		..SCREW		2
		AN960PD10L		..WASHER		2
	-23			DELETED		
	-24	41A-35003-212		.STRIP - RUBBING		2
	-25	41A-35003-42		.SEAL - DOOR LH		1
		41A-35003-43		.SEAL - DOOR RH		1
	-26	41A-35127-90		.RETAINER - SEAL LH		1
		41A-35127-91		.RETAINER - SEAL RH		1
	-27	NAS623-2-2		.SCREW		18
		AN960D8L		.WASHER		18
		MS21042L08		.NUT		18
	-28	41A-35135		.PANEL - FUS STA 136-143 LOWER ACCESS (I)		1
	-29	NAS1203-2		.BOLT		14
	-30	41A-35003-160		.VENT ASSY - BATTERY		2
R		MW4602003-1	*	JUMPER INSTL - BONDING (SEE SECTION 13)		REF
R	-31	M83413/8-2BB6	*	.JUMPER ASSY		1
R		M23053/5-104-4	*	.SLEEVE		1
R	-32	MS35207-264	*	.SCREW		2
R		AN960JD10L	*	.WASHER		4
R		AN960-10	*	.WASHER		2
R		MS35338-43	*	.WASHER		2
R		MS21042L3	*	.NUT		2
R			*	IAW C-12-114-000/CD-033		

-OOO-

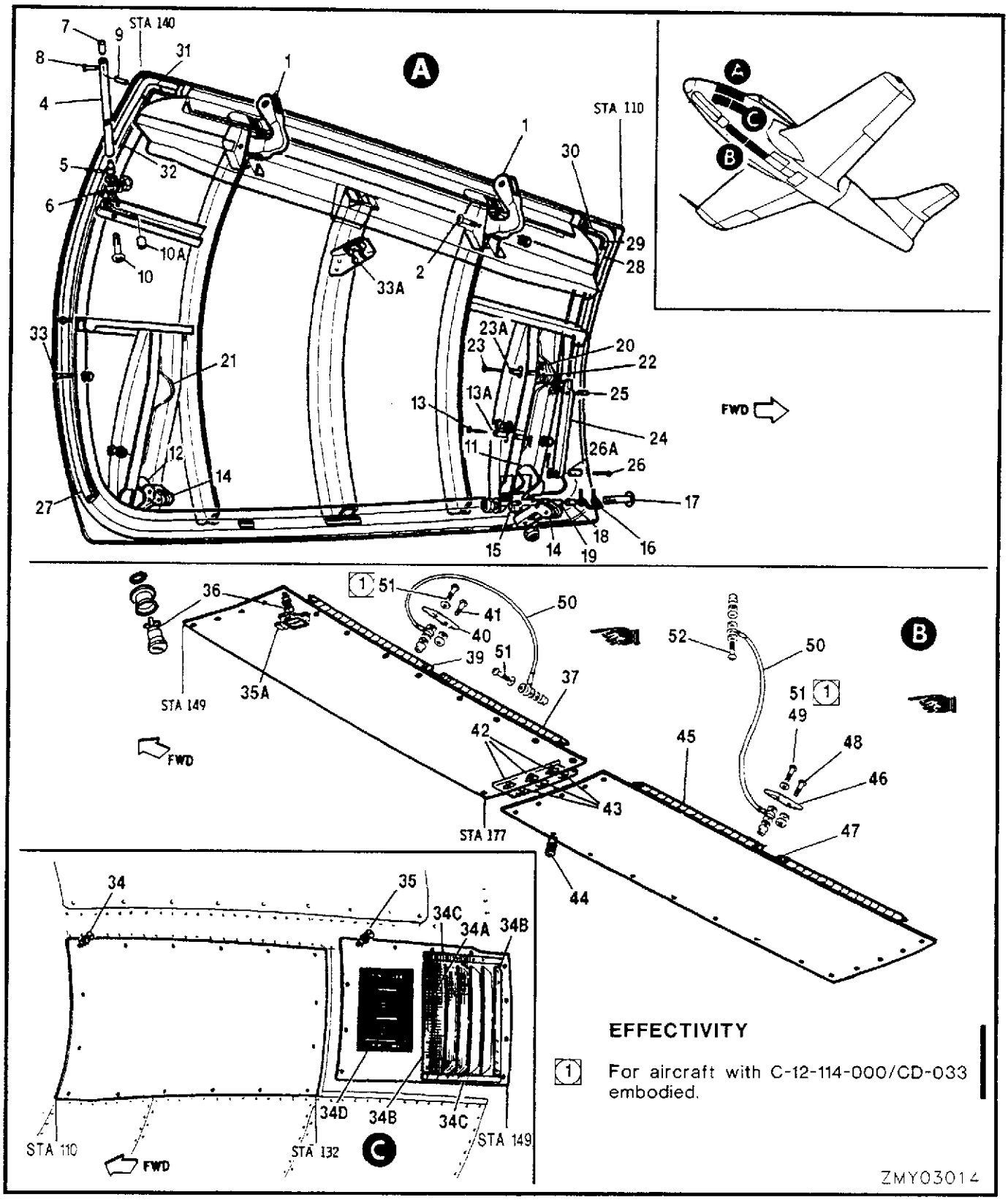

FIGURE 18 NOSE FUSELAGE DOORS

	FIGURE AND INDEX NUMBER	GROUP	FUSELAGE	EFFEC-TIVITY	UNITS PER ASSY
		MAJOR ASSEMBLY	NOSE FUSELAGE DOORS		
		PART NUMBER	1 2 3 4 5 6 7 NOMENCLATURE		
	18 -	41A-35126-804	DOOR ASSY - NOSE FUSELAGE EQUIPMENT LH (I) (SEE FIG. 17)		1
		41A-35126-805	DOOR ASSY - NOSE FUSELAGE EQUIPMENT RH (I)		1
	- 1	41A-35171	.BRACKET - EQUIP. DOOR HINGE LH		2
		41A-35171-1	.BRACKET - EQUIP. DOOR HINGE RH		2
	- 2	MS27039-1-17	.SCREW		4
		AN960PD10	.WASHER		4
		MS21042L3	.NUT		4
	- 3		DELETED		
		41A-30126	.STRUT ASSY - EQUIP DOOR		1
	- 4	41A-30126-2	..TUBE - STRUT		1
	- 5	41A-30126-6	..ROD END		1
R	- 6	F34-14	..ROD END - (V73134)		1
		NAS460-416	..WASHER		1
		AN316-4R	..NUT		1
	- 7	41A-30126-4	..PLUG END		1
	- 8	MS20392-3C29	..PIN		1
	- 9	NAS561P2-9	..PIN		1
	-10	NAS623-3-11	.SCREW		1
	-10A	NAS43-3-5	.SPACER		1
		AN960PD10	.WASHER		1
		MS21042L3	.NUT		1
		41A-35126-72	.BRACKET ASSY - LH (REAR LATCH UPPER)		1
		41A-35126-73	.BRACKET ASSY - RH (AFT LATCH UPPER)		1
	-11	41A-35126-76	..BRACKET - LH		1
		41A-35126-77	..BRACKET - RH		1
R		214-16	..RECEPTACLE - (V71286)		1
		41A-35126-128	.SHIM		AR
		41A-35126-130	.SHIM		AR
		41A-35126-70	.BRACKET ASSY - LH (DOOR AFT LATCH)		1
		41A-35126-71	.BRACKET ASSY - RH (DOOR AFT LATCH)		1
	-12	41A-35126-74	..BRACKET - LH		1
		41A-35126-75	..BRACKET - RH		1
R		214-16	..RECEPTACLE - (V71286)		1
		41A-35126-124	.SHIM		AR
		41A-35126-126	.SHIM		AR
	-13	NAS623-3-16	.SCREW - (LINK STOP)		2
	-13A	NAS43HT3-63	.SPACER		2
			OR		
		NAS43-3-63	.SPACER		
		AN960PD10L	.WASHER		2
		MS21042L3	.NUT		2
	-14	41A-35172	.LATCH - NOSE FUS EQUIP DOOR		2
	-15	NAS428-4-12	.BOLT - (LATCH ADJUSTING)		2
		AN316-4R	.NUT		2
	-16	41A-30132	.SPRING - EQUIP DOOR LATCH		2
	-17	MS27039-1-28	.SCREW - (LATCH & SPRING RETAINING)		2
	-18	NAS43DD3-9	.SPACER - (SPRING)		4
	-19	NAS43HT3-56	.SPACER - (LATCH)		2
			OR		
		NAS43-3-56	.SPACER		
		AN960PD10L	.WASHER		2
		MS21042L3	.NUT		2
		41A-30125	.LATCH ASSY - NOSE FUSELAGE EQUIP DOOR FORWARD LH		1
		41A-30125-1	.LATCH ASSY - NOSE FUSELAGE EQUIP DOOR FORWARD RH		1
	-20	41A-30125-2	..LATCH - FWD LH		1
		41A-30125-3	..LATCH - FWD RH		1
R		4002H	..GROMMET - (V71286)		1
R		R4G	..SNAP RING - (V71286)		1
R		4002-5H	..STUD - (V71286)		1

FIGURE AND INDEX NUMBER	GROUP / MAJOR ASSEMBLY	FUSELAGE / NOSE FUSELAGE DOORS	EFFEC-TIVITY	UNITS PER ASSY
	PART NUMBER	1 2 3 4 5 6 7 NOMENCLATURE		
18 -	41A-30124	.LATCH ASSY - NOSE FUSELAGE EQUIP DOOR AFT LH		1
	41A-30124-1	.LATCH ASSY - NOSE FUSELAGE EQUIP DOOR AFT RH		1
-21	41A-30124-2	..LATCH - AFT LH		1
	41A-30124-3	..LATCH - AFT RH		1
	4002H	..GROMMET - (V71286)		1
	R4G	..SNAP RING - (V71286)		1
	4002-5H	..STUD - (V71286)		1
-22	41A-35173	.LINK - NOSE FUS EQUIP DOOR		2
-23	MS27039-1-24	.SCREW - (LATCH & LINK RETAINING)		2
-23A	NAS43HT3-63	.SPACER		2
		OR		
	NAS43-3-63	.SPACER		
	AN960PD10	.WASHER		2
	MS21042L3	.NUT		2
-24	41-30127	.LINK - NOSE FUSELAGE EQUIP DOOR		2
-25	41-30129	.PIN - NOSE FUSELAGE EQUIP DOOR		2
-26	MS20392-2C25	.PIN		2
-26A	NAS43DD3-4	.SPACER		2
	AN960PD10	.WASHER		2
	MS24665-130	.COTTER PIN		2
-27	41A-35126-140	.SEAL -(SEE PART 4 BULK MATERIAL CHART)		1
-28	41A-35126-86	.RETAINER - LH (SEAL FORWARD)		1
	41A-35126-87	.RETAINER - RH (SEAL FORWARD)		1
-29	41A-35126-36	.RETAINER - (SEAL FORWARD CORNER)		1
-30	41A-35126-38	.RETAINER - (SEAL UPPER)		1
-31	41A-35126-34	.RETAINER - (SEAL REAR CORNER)		1
-32	41A-35126-84	.RETAINER - LH (SEAL REAR)		1
	41A-35126-85	.RETAINER - RH (SEAL REAR)		1
-33	MS24693-51	.SCREW - (SEAL RETAINING)		40
	AN960PD8	.WASHER		40
	MS21042L8	.NUT		40
-33A	41A-35126-138	.CLIP ASSY - DOOR STRUT SPRING LH		1
	41A-35126-139	.CLIP ASSY - DOOR STRUT SPRING RH		1
R	NAS6203-10	.BOLT		2
R	AN960-10	.WASHER		2
R	AN363C1032	.NUT		2
	41A-35116	DOOR ASSY - FUS STA 110-132 RELAY PANEL ACCESS LH (R) (SEE FIG. 17)	001-120	1
	41A-35116-800	DOOR ASSY - FUS STA 110-132 RELAY PANEL ACCESS LH (R)	121-	1
	41A-35116-1	DOOR ASSY - FUS STA 110-132 RELAY PANEL ACCESS RH (R)	001-120	1
	41A-35116-801	DOOR ASSY - FUS STA 110-132 RELAY PANEL ACCESS RH (R)	121-	1
-34	40S5-3	.STUD - (V71286)		16
	4002H	.GROMMET - (V71286)		16
	R4G	.SNAP RING - (V71286)		16
	41A-35121-800	DOOR ASSY - FUS STA 132-149 BATTERY LH (R) (SEE FIG. 16)		1
	41A-35121-801	DOOR ASSY - FUS STA 132-149 BATTERY RH (R)		1
	41A-35121-32	.SCREEN ASSY - BATTERY DOOR LH (FOR SPARES ORDER 41A-35121-34)		1
	41A-35121-34	.SCREEN ASSY - BATTERY DOOR LH (SPARE FOR 41A-351)		
	41A-35121-33	.SCREEN ASSY - BATTERY DOOR RH (FOR SPARES ORDER 41A-35121-35)		1
	41A-35121-35	.SCREEN ASSY - BATTERY DOOR RH (SPARE FOR 41A-351 21-33)		
-34A	41A-35121-26	..SCREENING - DOOR LH		1
	41A-35121-27	..SCREENING - DOOR RH		1
-34B	41A-35121-28	..MEMBER - EDGE (UPPER & LOWER		2
-34C	41A-35121-30	..MEMBER - EDGE (SIDES)		2
-34D	C74C00179	..DECAL - NICAD CAUTION (IAW C-12-114-000/CF-370)		1

	FIGURE AND INDEX NUMBER	PART NUMBER		1 2 3 4 5 6 7 NOMENCLATURE	EFFEC-TIVITY	UNITS PER ASSY
		GROUP		FUSELAGE		
		MAJOR ASSEMBLY		NOSE FUSELAGE DOORS		
	18 -35	4002-5		.STUD - (V71286) (IAW C-12-114-000/CF-372)		11
		4002H		.GROMMET - (V71286)		11
		R4G		.SNAP RING - (V71286)		11
		41A-35110		DOOR INSTL - FUS STA 149- 177 ACCESS (SEE FIG. 16)		NP
		41A-35110-36		.DOOR ASSY - FUS STA 149- 177 ACCESS (I)		1
	-35A	41A-35156-14		..SCOOP - VENTILATION		1
				OR		
		41A-35110-952		..SCOOP - VENTILATION		
	-36	40S5-3		..STUD - (V71286)		17
		4002H		..GROMMET - (V71286)		17
		R4G		..SNAP RING - (V71286)		17
	-37	41A-35110-6		..HALF HINGE		1
	-38	S1267-9-980		.PIN ASSY - (V88308)		1
	-39	S1267-9-968		.PIN ASSY - (V88308)		1
	-40	41A-35074-12		.PLATE - (HINGE STOP)		1
	-41	NAS623-3-3		.SCREW		2
		AN960D10L		.WASHER		2
		MS21042L3		.NUT		2
		41A-35081-20		.CHANNEL ASSY - (I)		1
	-42	244-16		..RECEPTACLE - (V71286)		3
	-43	214-16		..RECEPTACLE - (V71286)		3
		41A-35092		DOOR INSTL - FUS STA 177 TO REAR PRESSURE BULKHEAD ACCESS (SEE FIG. 16)		NP
		41A-35092-2		.DOOR ASSY - FUS STA 177 BULKHEAD (I)		1
	-44	40S5-3		..STUD - (V71286)		17
		4002H		..GROMMET - (V71286)		17
		R4G		..SNAP RING - (V71286)		17
	-45	41A-35092-16		..HALF HINGE		1
	-46	S1267-9-995		.PIN ASSY - (V88308)		1
	-47	S1267-9-1196		.PIN ASSY - (V88308)		1
	-48	41A-35074-12		.PLATE - (HINGE STOP)		1
	-49	NAS623-3-3		.SCREW		2
		AN960D10L		.WASHER		2
		MS21042L3		.NUT		2
R		MW4602003-1	*	JUMPER INSTL - BONDING (SEE SECTION 13)		REF
R	-50	M83413/8-2BB6	*	.JUMPER ASSY		2
R		M23053/5-104-4	*	.SLEEVE		2
R	-51	MS35207-263	*	.SCREW		3
R		AN960JD10L	*	.WASHER		3
R		AN960-10	*	.WASHER		6
R		MS35338-43	*	.WASHER		3
R		MS21042-3	*	.NUT		3
R	-52	MS35207-230	*	.SCREW		1
R		AN960JD6L	*	.WASHER		2
R		AN960-6L	*	.WASHER		1
R		MS35338-41	*	.WASHER		1
R		MS21042-04	*	.NUT		1
R			*	IAW C-12-114-000/CD-033		

-OOO-

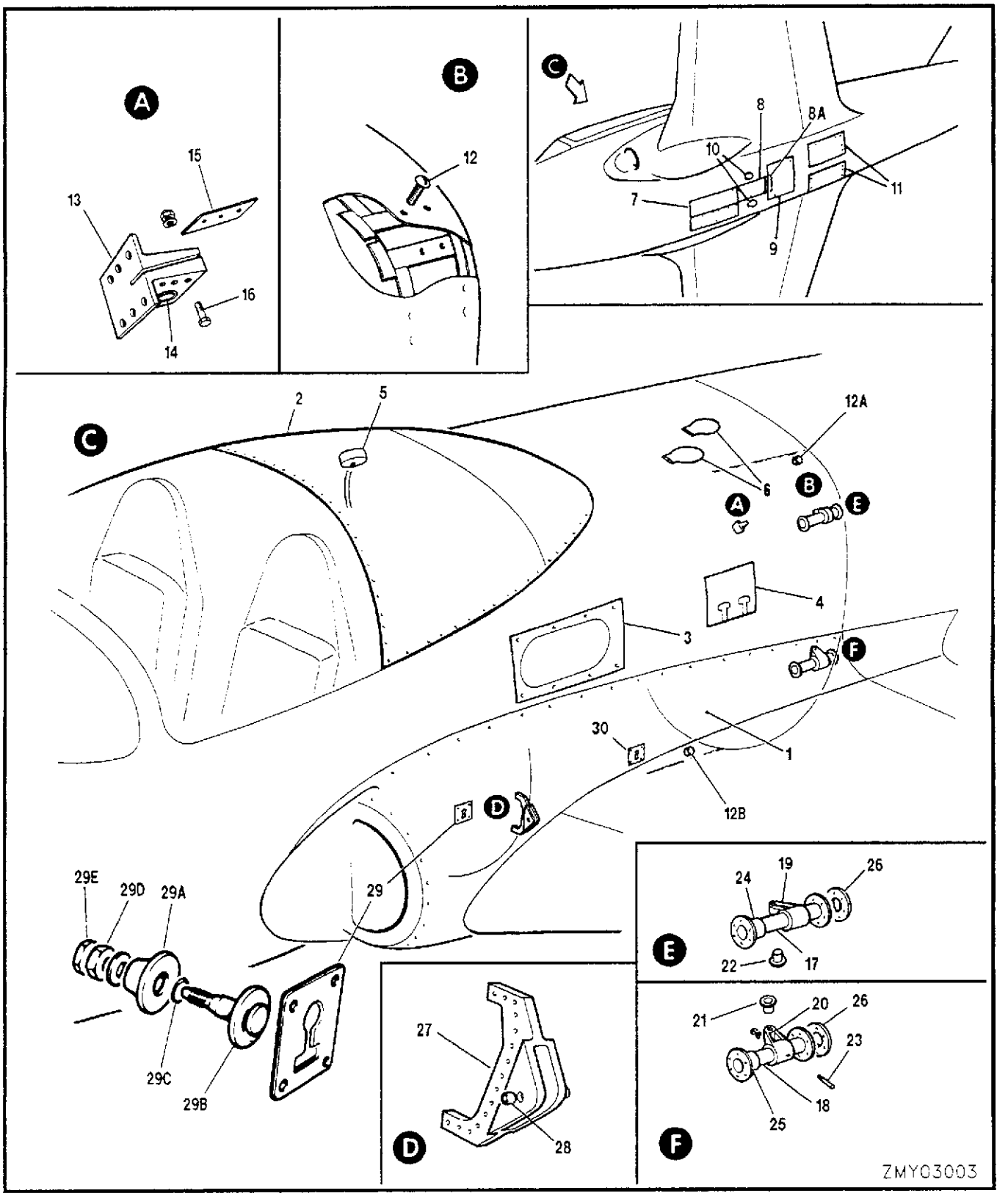

FIGURE 19 (SHEET 1) CENTRE FUSELAGE & ENGINE MOUNTINGS

FIGURE AND INDEX NUMBER	GROUP / MAJOR ASSEMBLY / PART NUMBER	FUSELAGE / CENTRE FUSELAGE & ENGINE MOUNTINGS / 1234567 NOMENCLATURE	EFFECTIVITY	UNITS PER ASSY
19 -	41A-35004	FUSELAGE GENL ASSY - CENTRE (SEE FIG. 16)		NP
- 1	41A-35160-804	.FAIRING INSTL - FUSELAGE TO WING UPPER (SEE FIG. 23)		REF
- 2	41A-35031	.FAIRING INSTL - CANOPY (SEE FIG. 24)		REF
- 3	41A-35069	.DOOR INSTL - FUEL TANK ACCESS(SEE FIG. 32)		REF
- 4	41A-35140	.DOOR INSTL - HYDRAULIC TANK FILLER ACCESS (SEE FIG. 32)		REF
- 5	41A-65243	.FILLER INSTL - FUEL (SEE SECTION 6)		REF
- 6	41A-35103	.DOOR INSTL - FLIGHT CONTROLS BREAK ACCESS (SEE FIG. 32)		REF
- 7	41A-35081	.DOOR INSTL - FUS STA 236 TO REAR BULKHEAD ACCESS (SEE FIG. 32)		REF
- 8	41A-35074	.DOOR INSTL - FUS STA 235-257 ACCESS (SEE FIG. 32)		REF
- 8A	41A-35081-34	.CHANNEL ASSY - (DOOR LANDING PLATE) (INTERCHANGEABLE)		1
- 9	41A-35096-40	.DOOR ASSY - COMPRESSOR BLADE (SEE FIG. 32)		REF
-10	41A-35106	.DOOR INSTL - TANK WATER DRAIN ACCESS (SEE FIG. 32)		REF
-11	41A-35129-48	.DOOR INSTL - ENGINE ACCESS (SEE FIG. 32)		REF
-12	AN565A428H9	.SCREW - (HOISTING HOLE PLUG)		8
-12A	41A-35174-2	.BUSHING - (FUS UPPER ATTACHING STA 308)		2
-12B	41A-35174-4	.BUSHING - (FUS LOWER ATTACHING STA 308)		2
	41A-35149	.MOUNTING INSTL - ENGINE FORWARD LH		NP
	41A-35149-1	.MOUNTING INSTL - ENGINE FORWARD RH		NP
	41A-35178-2	..MOUNTING ASSY - FUS STA 285 ENGINE FORWARD LH (R)		1
	41A-35178-3	..MOUNTING ASSY - FUS STA 285 ENGINE FORWARD RH (R)		1
-13	41A-35178-4	...MOUNTING - FUS STA 285 ENGINE FORWARD LH		1
	41A-35178-5	...MOUNTING - FUS STA 285 ENGINE FORWARD RH		1
-14	NAS75-4-005	...BUSHING		2
-15	41A-35149-10	..SHIM - ENGINE FORWARD MOUNTING		1
	41A-35149-12	..SHIM - ENGINE FORWARD MOUNTING		1
-16	NAS1103-16	..BOLT		3
	AN960PD10	..WASHER		3
	MS21042L3	..NUT		3
	41A-35148	.MOUNTING INSTL - FUSELAGE STA 306 ENGINE		NP
	41A-35148-2	..MOUNTING ASSY - ENGINE UPPER LH (R)		1
	41A-35148-3	..MOUNTING ASSY - ENGINE UPPER RH (R)		1
	41A-35148-4	..MOUNTING ASSY - ENGINE LOWER LH (R)		1
	41A-35148-5	..MOUNTING ASSY - ENGINE LOWER RH (R)		1
-17	41A-35147-2	...TUBE ASSY - ENGINE MOUNTING UPPER LH		1
	41A-35147-3	...TUBE ASSY - ENGINE MOUNTING UPPER RH		1
-18	41A-35147-4	...TUBE ASSY - ENGINE MOUNTING LOWER LH		1
	41A-35147-5	...TUBE ASSY - ENGINE MOUNTING LOWER RH		1
	41A-35154	...FITTING ASSY - ENGINE MOUNTING UPPER LH		1
	41A-35154-1	...FITTING ASSY - ENGINE MOUNTING UPPER RH		1
	41A-35155	...FITTING ASSY - ENGINE MOUNTING LOWER LH		1
	41A-35155-1	...FITTING ASSY - ENGINE MOUNTING LOWER RH		1
-19	41A-35154-2	....FITTING - ENGINE MOUNTING UPPER LH		1
	41A-35154-3	....FITTING - ENGINE MOUNTING UPPER RH		1
-20	41A-35155-2	....FITTING - ENGINE MOUNTING LOWER LH		1
	41A-35155-3	....FITTING - ENGINE MOUNTING LOWER RH		1
-21	41A-61213-6	....BUSHING - ENGINE MOUNT		1
-22	41A-61213-8	....BUSHING - ENGINE MOUNT		1
-23	AN386-2-14A	...PIN - (FITTING RETAINING)		2
	AN975-3	...WASHER		2
	MS21042L3	...NUT		2
-24	41A-35152-4	...FITTING - ENGINE MOUNT UPPER		1
-25	41A-35152-2	...FITTING - ENGINE MOUNT LOWER		1
-26	41A-35147-12	..SHIM - ENGINE UPPER MOUNTING		2
	41A-35147-16	..SHIM - ENGINE LOWER MOUNTING		2
	41A-35041	.FRAME ASSY - BULKHEAD STA 235		1

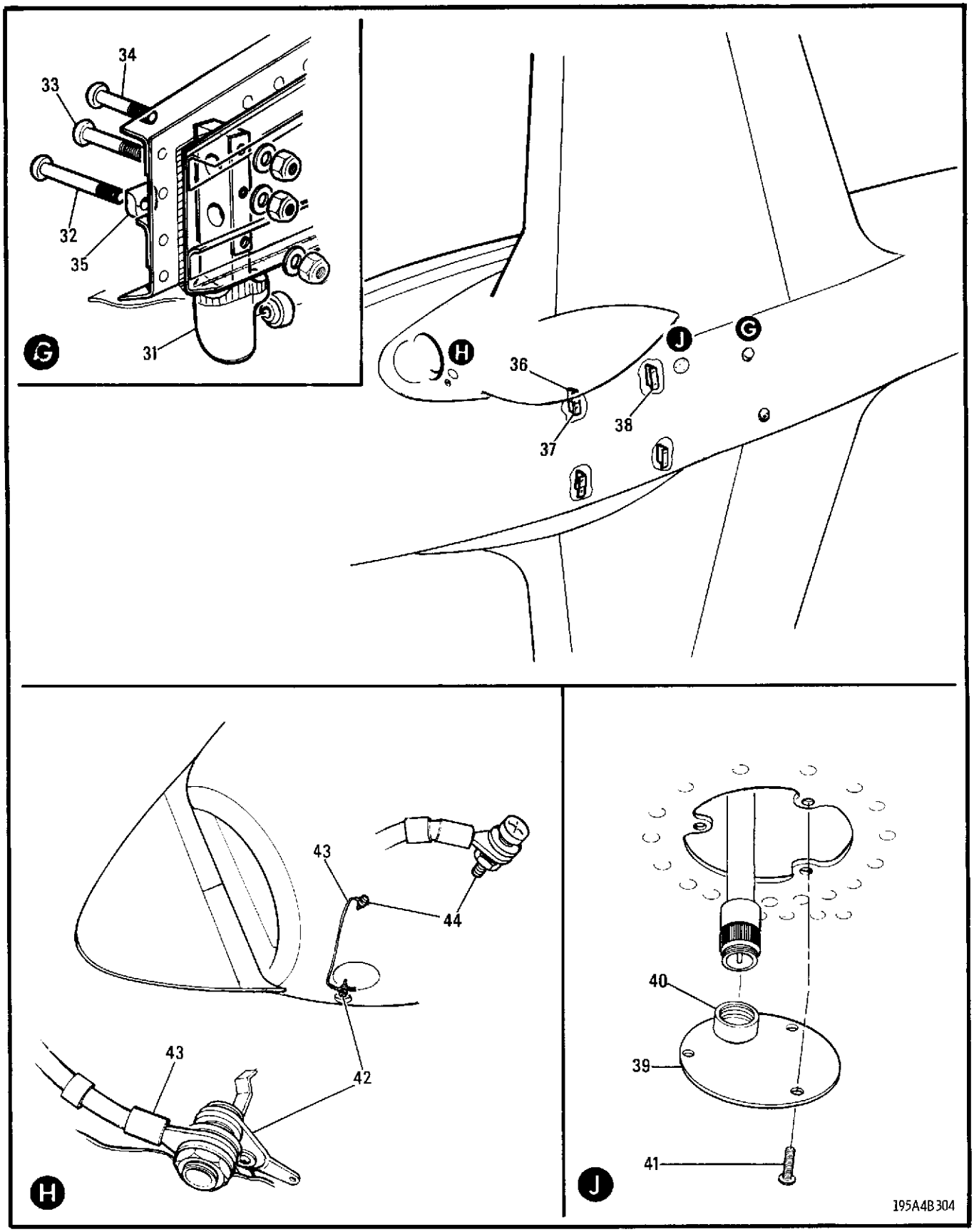

FIGURE 19 (SHEET 2) CENTRE FUSELAGE ENGINE MOUNTINGS

FIGURE AND INDEX NUMBER	GROUP	FUSELAGE	EFFEC-TIVITY	UNITS PER ASSY
	MAJOR ASSEMBLY	CENTRE FUSELAGE ENGINE MOUNTINGS		
	PART NUMBER	1 2 3 4 5 6 7 NOMENCLATURE		
19 -27	41A-35052	..FITTING - WING TO FUS ATT STA 235 LH		1
	41A-35052-1	..FITTING - WING TO FUS A TT STA 235 RH		1
-28	NAS75-9-009	...BUSHING		2
-29	FCB20441	..FITTING - (V83624) (FUEL CELL KEYHOLE)		25
	FCC20458	..PIN ASSY - (V83624) (FUEL CELL HANGER)		25
-29A	FCB20104	...PLATE - (V83624)		1
-29B	FCB20459	...PIN - (V83624)		1
-29C	MS29513-12	...O-RING		1
	AN960D516	...WASHER		1
-29D	MS35649-2314	...NUT		1
-29E	AC356-518	...LOCK NUT - (V83624)		1
	41A-35084	.STRUCTURE INSTL - REAR FUEL TANK LH STA 257-277		NP
	41A-35084-1	.STRUCTURE INSTL - REAR FUEL TANK RH STA 257-277		NP
-30	FCB20441	..FITTING - (V83624) (FUEL CELL KEYHOLE)		3
	FCC20458	..PIN ASSY - (V83624) (FUEL CELL HANGER)		3
	FCB20104	...PLATE - (V83624)		1
	FCB20459	...PIN - (V83624)		1
	MS29513-12	...O-RING		1
	AN960D516	...WASHER		1
	MS35649-2314	...NUT		1
	AC356-518	...LOCK NUT - (V83624)		1
	K41A-30019 C C *	KIT - AUX FUEL TANKS INSTL (LH)		NP
	K41A-30019-1 *	KIT - AUX FUEL TANKS INSTL (RH)		NP
-31	41G-35043	.FITTING ASSY - CRUTCH		1
	41G-35043-2	..FITTING		1
	LSS-4	..BEARING - (V73134)		1
-32	NAS1103-29	.BOLT		1
-33	NAS1103-18	.BOLT		1
-34	NAS1103-20	.BOLT		1
-35	K41A-30019-38	.WASHER		1
	AN960PD10	.WASHER		3
	MS21042L3	.NUT		3
-36	41A-35215	.FITTING ASSY - FS 236 PYLON ATTACHING (LH OUTER)		1
	41A-35215-1	.FITTING ASSY - FS 236 PYLON ATTACHING (RH OUTER)		1
	41G-35032	..BUSHING		1
	NAS3003-15	.BOLT		2
	NAS3003-13	.BOLT		2
R	S1246AB15-16-20	.WASHER - (V88308)		4
	MS21042L3	.NUT		4
-37	41A-35214	.FITTING ASSY - FS 236 PYLON ATTACHING (LH INNER)		1
	41A-35214-1	.FITTING ASSY - FS 236 PYLON ATTACHING (RH INNER)		1
	41G-35032	..BUSHING		1
	NAS3003-8	.BOLT		4
R	S1246AB15-16-20	.WASHER - (V88308)		3
	K41A-30019-38	.WASHER		1
	MS21042L3	.NUT		4
-38	41A-35216	.FITTING ASSY - FS 257 PYLON ATTACHING (LH)		1
	41A-35216-1	.FITTING ASSY - FS 257 PYLON ATTACHING (RH)		1
	41G-35032	..BUSHING		2
	NAS3003-12	.BOLT		2
	NAS3003-13	.BOLT		1
R	S1246AB15-16-20	.WASHER - (V88308)		5
R	S1246AB15-16-63	.WASHER - (V88308)		1
	MS21042L3	.NUT		3

FIGURE AND INDEX NUMBER	GROUP	FUSELAGE	EFFEC-TIVITY	UNITS PER ASSY
	MAJOR ASSEMBLY	CENTRE FUSELAGE ENGINE MOUNTINGS		
	PART NUMBER	1 2 3 4 5 6 7 NOMENCLATURE		
19 -39	K41A-30019-40	.DOOR ASSY - PYLON ELECTRICS STOWAGE LH		1
	K41A-30019-41	.DOOR ASSY - PYLON ELECTRICS STOWAGE RH		1
-40	K41A-30019-42	.CAP		2
-41	NAS623-3-2	.SCREW		6
	K41A-60017 *	GROUNDING RECEPTACLE INSTL - FUEL NOZZLE LH		NP
-42	MS90298-2	.RECEPTACLE		1
		OR		
	AN3117-1	.RECEPTACLE		
-43	MS25083-2BE8	.JUMPER		1
	AN960D616L	.WASHER		2
	MS35333-42	.LOCKWASHER		1
-44	MS35207-264	.SCREW		1
	AN960D10L	.WASHER		2
	MS35338-43	.LOCKWASHER		1
	MS21042L3	.NUT		1
		-OOO-		
	*	AS PER C-12-114-000/CD-031		

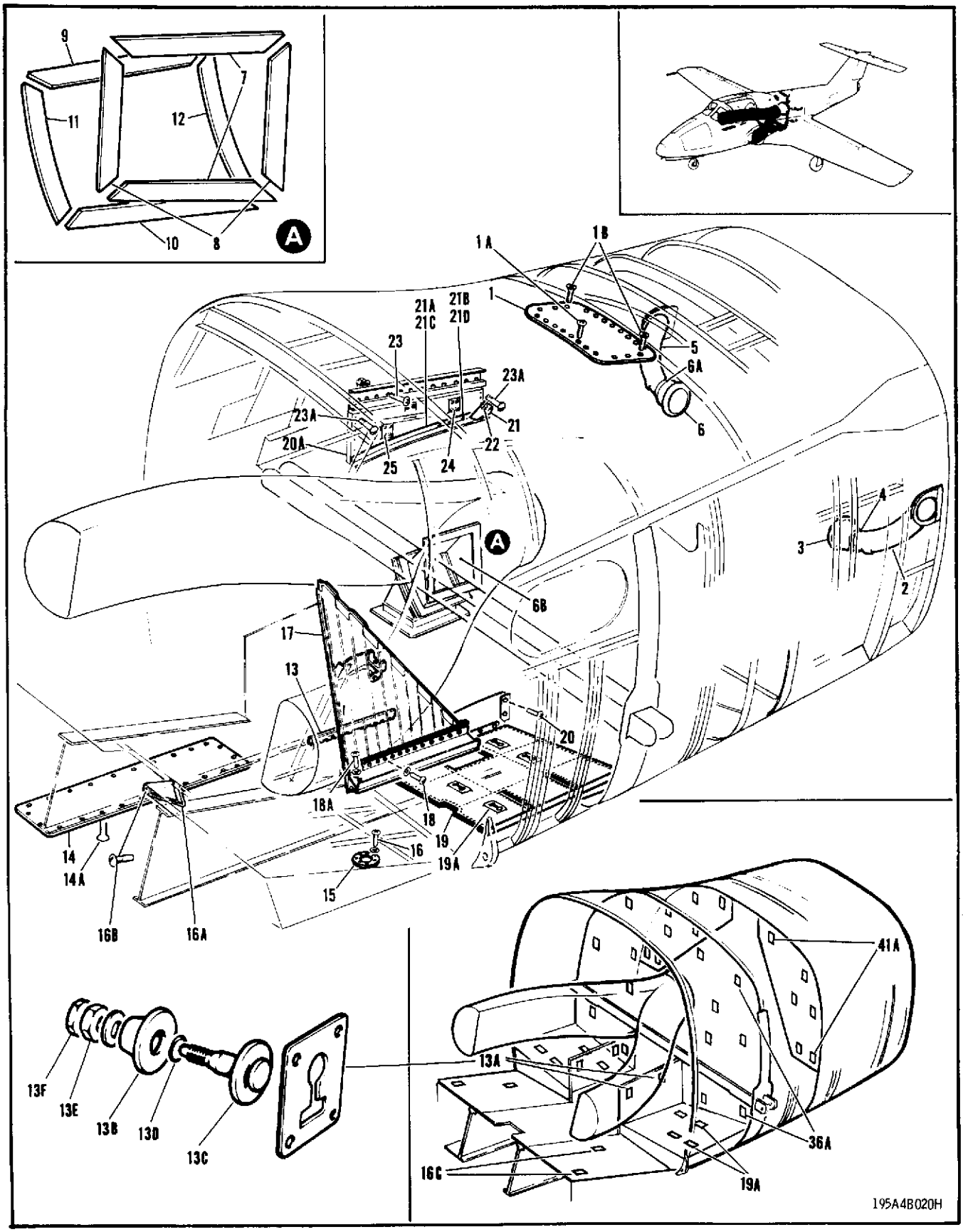

FIGURE 20 (SHEET 1) CENTRE FUSELAGE

	FIGURE AND INDEX NUMBER	GROUP / MAJOR ASSEMBLY / PART NUMBER		FUSELAGE / CENTRE FUSELAGE / 1 2 3 4 5 6 7 NOMENCLATURE	EFFEC-TIVITY	UNITS PER ASSY
	20 -	41A-35004		FUSELAGE GENL ASSY - CENTRE (SEE FIG. 19)		REF
	- 1	41A-35107		.DOOR - FUS STA 268-278 UPPER ACCESS (I)		1
	- 1A	NAS623-3-2		.SCREW		12
	- 1B	NAS1203-2		.BOLT		2
		41A-35139		.DUCT INSTL - COMPRESSOR BLEED (PORT)		NP
		41A-61410		..DUCT INSTL - COMPRESSOR BLEED EXIT LH		NP
	- 2	11A00228G01	**	...DUCT ASSY - LH (V35013)		1
		NO NUMBER	**	...PACKER - LH (MAKE FROM AMS4036 2024-T3, 0.063 IN. THICK)		1
	- 3	11A00227P01	**	...CONNECTOR - (V35013) (AIR BLEED DUCT FLEX)		1
	- 4	QS200M48S		...CLAMP - (V08484)		1
		41A-61410-1		.DUCT INSTL - COMPRESSOR BLEED EXIT RH		NP
	- 5	11A00228G02	**	..DUCT ASSY - RH (V35013)		1
		NO NUMBER	**	..PACKER - RH (MAKE FROM AMS4036 2024-T3, 0.063 IN. THICK)		1
	- 6	11A00227P01	**	..CONNECTOR - (V35013) (AIR BLEED DUCT FLEX)		1
	- 6A	QS200M48S		..CLAMP - (V08484)		1
		41A-96202-4		.DUCT INSTL - HEAT EXCHANGER COOLING AIR (STARBOARD)		NP
	- 6B	41A-96202-48		..DUCT ASSY - HEAT EXCHANGER COOLING AIR		1
R	- 7	41A-96202-42		..SEAL - (DUCT TO EXCHANGER UPPER & LOWER) (MAKE FROM BULK MATERIAL AMS3197 0.250 IN. THK)		2
R	- 8	41A-96202-44		..SEAL - (DUCT TO EXCHANGER FORWARD & REAR) (MAKE FROM BULK MATERIAL AMS3197 0.250 IN. THK)		2
R	- 9	41A-96202-50		..SEAL - (FUSELAGE TO DUCT UPPER) (MAKE FROM BULK MATERIAL AMS3197 0.375 IN. THK)		1
R	-10	41A-96202-52		..SEAL - (FUSELAGE TO DUCT LOWER) (MAKE FROM BULK MATERIAL AMS3197 0.375 IN. THK)		1
R	-11	41A-96202-56		..SEAL - (FUSELAGE TO DUCT FORWARD) (MAKE FROM BULK MATERIAL AMS3197 0.375 IN. THK)		1
R	-12	41A-96202-54		..SEAL - (FUSELAGE TO DUCT REAR) (MAKE FROM BULK MATERIAL AMS3197 0.375 IN. THK)		1
		41A-35054		.KEEL STRUCTURE INSTL - CENTRE FUSELAGE		NP
		41A-35054-2		..KEEL ASSY - LH		1
		41A-35054-3		..KEEL ASSY - RH		1
	-13	41A-35054-80		...HINGE - LH		1
		41A-35054-78		...HINGE - RH		1
	-13A	FCB20441		...FITTING - (V83624) (FUEL CELL KEYHOLE)		2
		FCC20458		...PIN ASSY - (V83624) (FUEL CELL HANGER)		2
	-13B	FCB20104		....PLATE - (V83624)		1
	-13C	FCB20459		....PIN - (V83624)		1
	-13D	MS29513-12		....O-RING		1
		AN960D516		....WASHER		1
	-13E	MS35649-2314		....NUT		1
	-13F	AC356-518		....LOCK NUT - (V83624)		1
		41A-35061		.SUPPORT & FLOOR BEAM INSTL - REAR PRESSURE BULKHEAD TO FUS STA 236 WATER SEPARATOR (STBD)		NP
		41A-35061-4		..DOOR ASSY - (I)		1
	-14	41A-35061-22		...DOOR		1
	-14A	NAS1203-3		..BOLT		24
		41A-35059		.FLOOR INSTL - REAR PRESS .BULKHEAD TO FUS STA 236 FWD FUEL CELL		NP
	-15	41A-35059-42		..PLATE		2
	-16	MS35207-261		..SCREW		8
		AN960D10		..WASHER		8
	-16A	41A-35059-50	*	..BRACKET		2
	-16B	MS35206-245	*	..SCREW		2
		AN960D8	*	..WASHER		2
		41A-35088-1		.PANEL INSTL - FORWARD FUEL CELL SUPPORT FLOOR RH		NP
	-16C	FCB20441		..FITTING - (V83624) (FUEL CELL KEYHOLE)		4
		FCC20458		..PIN ASSY - (V83624) (FUEL CELL HANGER)		4
		FCB20104		...PLATE - (V83624)		1
		FCB20459		...PIN - (V83624)		1
			*	IAW C-12-114-000/CD-006		
			**	IAW C-12-114-000/CF-488		

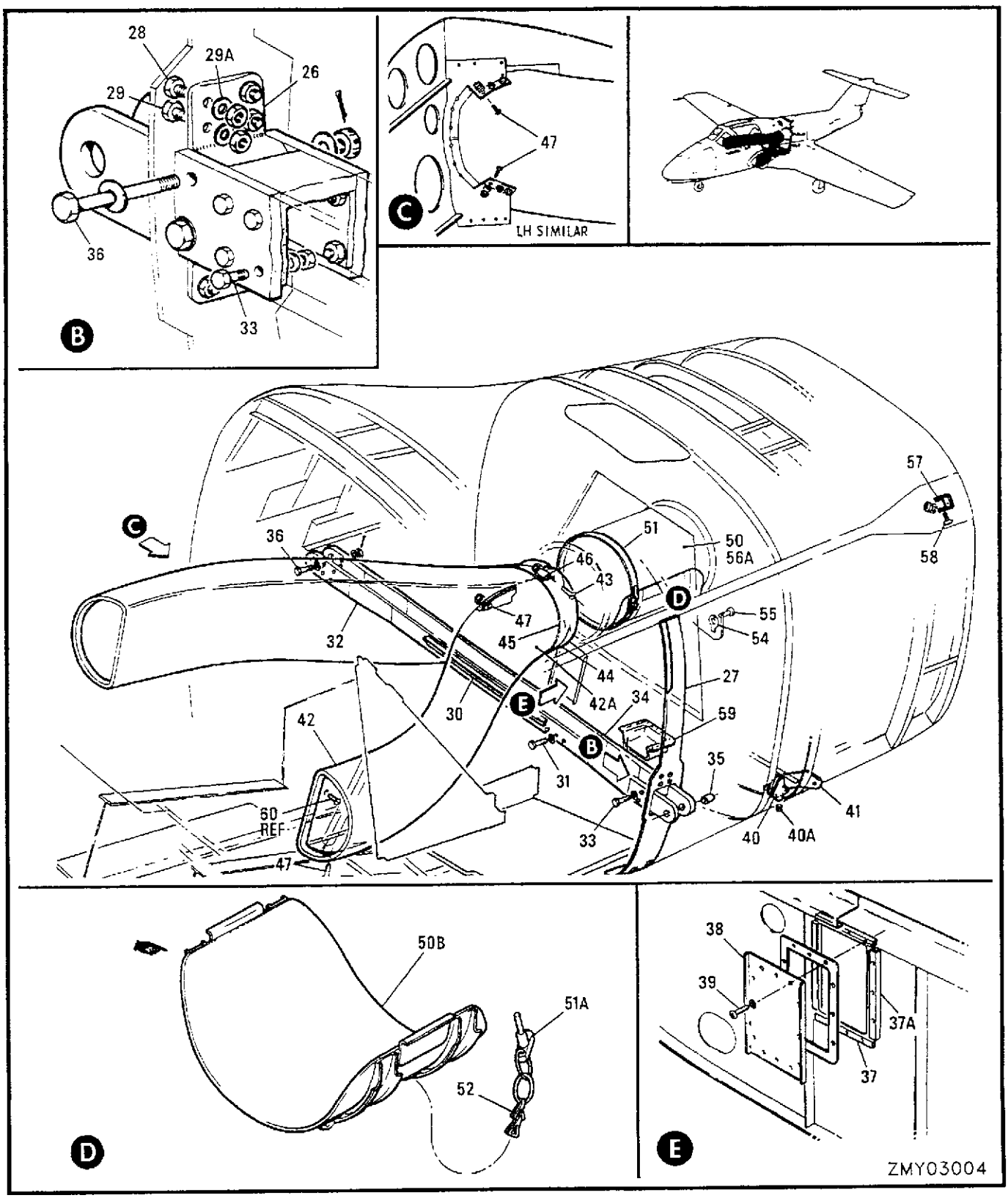

FIGURE 20 (SHEET 2) CENTRE FUSELAGE

FIGURE AND INDEX NUMBER	GROUP	FUSELAGE	EFFEC-TIVITY	UNITS PER ASSY
	MAJOR ASSEMBLY	CENTRE FUSELAGE		
	PART NUMBER	1 2 3 4 5 6 7 NOMENCLATURE		
20 -	MS29513-12	...O-RING		1
	AN960D516	...WASHER		1
	MS35649-2314	...NUT		1
	AC356-518	...LOCK NUT - (V83624)		1
	MS21042L08 *	..NUT		2
	41A-35088	.PANEL INSTL - FORWARD FUEL CELL SUPPORT FLOOR LH		NP
-17	41A-35088-2	..PANEL ASSY - FWD FUEL CELL FLOOR LH (I)		1
	41A-35088-3	..PANEL ASSY - FWD FUEL CELL FLOOR RH (I)		1
-18	NAS623-3-3	..SCREW		15
-18A	NAS623-3-4	..SCREW		2
	AN960PD10L	..WASHER		17
	41A-35060	.FLOOR INSTL - FUS STA 236-258 FORWARD TO MAIN SPAR BULK-HEAD		NP
-19	41A-35060-6	..PANEL - LH		1
	41A-35060-7	..PANEL - RH		1
-19A	FCB20441	..FITTING - (V83624) (FUEL CELL KEYHOLE)		8
	FCC20458	..PIN ASSY - (V83624) (FUEL CELL HANGER)		8
	FCB20104	...PLATE - (V83624)		1
	FCB20459	...PIN - (V83624)		1
	MS29513-12	...O-RING		1
	AN960D516	...WASHER		1
	MS35649-2314	...NUT		1
	AC356-518	...LOCK NUT - (V83624)		1
-20	NAS623-3-1	..SCREW		14
	41A-65242	.PARTITION INSTL - CENTRAL FUEL CELL		NP
-20A	41A-65242-2	..PARTITION ASSY		1
-21	41A-35189	..GUARD - LH		1
	41A-35189-1	..GUARD - RH		1
	41A-65242-6	..PARTITION ASSY		1
	41A-65242-7	..PARTITION ASSY		1
-21A	41A-65242-72	...STRIP - RUBBER		1
-21B	41A-65242-73	...STRIP - RUBBER		1
-21C	41A-65242-74	...RUBBER EXTRUSION		1
-21D	41A-65242-75	...RUBBER EXTRUSION		1
-22	NAS623-3-5	..SCREW		2
-23	NAS623-3-1	..SCREW		27
-23A	NAS623-3-4	..SCREW		10
	AN960-10L	..WASHER		35
	MS21042L3	..NUT		2
-24	P101F12-2	..PLUG - (V29372)		14
-25	P101F12-0	..PLUG - (V29372)		12
	S101F12-08	..SLEEVE - (V29372)		26
	41A-35044	.FRAME ASSY - FUSELAGE STA 257 MAIN SPAR BULKHEAD		1
-26	41A-35063	..FITTING - FUSELAGE STA 257 MAIN SPAR LH		1
	41A-35063-1	..FITTING - FUSELAGE STA 257 MAIN SPAR RH		1
-27	41A-35044-114	..STRAP - LH		1
	41A-35044-115	..STRAP - RH		1
-28	NAS464-4A8	..BOLT		6
-29	NAS464-4A9	..BOLT		6
	AN960PD416L	..WASHER - (UNDER BOLT HE AD)		12
-29A	2935-04	..BASE - (V72962)		12
	52LH2935-048	..NUT - (V72962)		12
-30	41A-35044-60	..ANGLE - (FORWARD)		1
-31	AN4-13A	..BOLT		4
	AN960PD416	..WASHER		4
-32	41A-35062-1	..BOOM - FUS STA 257 MAIN SPAR RH (FORWARD)		1
R -33	NAS6204-18	..BOLT		8
	AN960D416	..WASHER		8
	MS21042L4	..NUT		8
-34	41A-35062	..BOOM - FUS STA 257 MAIN SPAR LH (REAR)		1
	*	IAW C-12-114-000/CD-006		

	FIGURE AND INDEX NUMBER	GROUP	FUSELAGE	EFFEC-TIVITY	UNITS PER ASSY
		MAJOR ASSEMBLY	CENTRE FUSELAGE		
		PART NUMBER	1 2 3 4 5 6 7 NOMENCLATURE		
	20 -35	41A-10030-4	..BUSHING		4
	-36	NAS464P7-62	..BOLT		4
		AN960PD716	..WASHER		8
		AN320-7	..NUT		4
		MS24665-306	..COTTER PIN		4
R	-36A	FCB20441	..FITTING - (V83624) (FUEL CELL KEYHOLE)		12
R		FCC20458	..PIN ASSY - (V83624) (FUEL CELL HANGER)		12
R		FCB20104	...PLATE - (V83624)		1
R		FCB20459	...PIN - (V83624)		1
		MS29513-12	...O-RING		1
		AN960D516	...WASHER		1
		AN340DD516	...NUT		1
R		AC356-518	...LOCK NUT - (V83624)		1
		41A-35046	.FIREWALL ASSY - FUSELAGE STA 278		NP
	-37	41A-35046-132	..CHANNEL		2
	-37A	41A-35046-134	..CHANNEL		2
	-38	41A-35046-130	..DOOR - (I)		1
	-39	NAS623-3-1	..SCREW		12
		41A-35047	.FRAME ASSY - FUS STA 285 WING REAR SPAR ATTACHMENT		NP
		41A-35089	..FITTING ASSY - JACK LH		1
		41A-35089-1	..FITTING ASSY - JACK RH		1
	-40	41A-35089-2	...FITTING - JACK LH		1
		41A-35089-3	...FITTING - JACK RH		1
	-40A	MS21209F8-20	...INSERT		1
	-41	41A-35057	..FITTING - WING ATT LH (R)		1
		41A-35057-1	..FITTING - WING ATT RH (R)		1
R	-41A	FCB20441	..FITTING - (V83624) (FUEL CELL KEYHOLE)		12
R		FCC20458	..PIN ASSY - (V83624) (FUEL CELL HANGER)		12
R		FCB20104	...PLATE - (V83624)		1
R		FCB20459	...PIN - (V83624)		1
		MS29513-12	...O-RING		1
		AN960D516	...WASHER		1
		AN340DD516	...NUT		1
R		AC356-518	...LOCK NUT - (V83624)		1
		41A-35166	.DUCT INSTL - ENGINE		NP
	-42	41A-35166-2	..DUCT ASSY - ENGINE INTAKE LH (I)		1
		41A-35166-3	..DUCT ASSY - ENGINE INTAKE RH (I)		1
	-42A	41A-35165	..JUNCTION - ENGINE INTAKE DUCT	001-026	1
		41A-35196	..JUNCTION ASSY - ENGINE INTAKE DUCT	027-	1
	-43	NAS333CPA4-5	..BOLT	001-026	8
		NAS333CPA4	..BOLT	027-	8
R		52-1650-02	..NUT - (V72962)	001-026	8
		41A-35166-44	..FLUSH NUT	027-	8
R	-44	S4506	..SEAL - (V88308)		AR
	-45	41A-35166-12	..RETAINER - SEAL		2
R	-46	QS200M140S	..CLAMP - (V08484)		2
	-47	NAS1203-8	..BOLT	001-026	128
		NAS1203-7	..BOLT	027-	128
		AN960PD10	..WASHER		114
		MS21042L3	..NUT		114
	-48		DELETED		
	-49		DELETED		
	-50		DELETED		
		41A-35119-800	.DUCT INSTL - FUS STA 257-277 FWD ENGINE		NP
	-50A	41A-35119-2	..DUCT ASSY - FWD ENGINE (R)		1
	-50B	41A-35119-4	...PANEL ASSY - DUCT ACCESS		1
R	-51	41A-35212-800	...STRAP ASSY - (V94581)		2
			(IAW C-12-114-000/CF-365)		

FIGURE AND INDEX NUMBER	GROUP		FUSELAGE	EFFEC-TIVITY	UNITS PER ASSY
	MAJOR ASSEMBLY		CENTRE FUSELAGE		
	PART NUMBER		1 2 3 4 5 6 7 NOMENCLATURE		
20 -51A	BLC3TA09S	*	...PIN - QUICK RELEASE		2
-52	NAS1201C10B10B	*	...CHAIN		2
-53			DELETED		
			DELETED		
			DELETED		
-54	41A-35119-76		...COVER - DUCT		1
-55	NAS623-3-2		...SCREW		3
-56	41A-35119-80		..COVER ASSY - DUCT (I)		1
-57	41A-35144		.BRACKET - UPPER LONGERON STOP LH		1
	41A-35144-1		.BRACKET - UPPER LONGERON STOP RH		1
-58	NAS623-3-5		.SCREW		8
	AN960PD10		.WASHER		8
	MS21042L3		.NUT		8
	41A-35200		.SCOOP INSTL - HYDRAULIC HEAT EXCHANGER		NP
-59	41A-75274		..SCOOP - HYDRAULIC PUMP BYPASS HEAT EXCHANGER		1
-60	NAS1204-32		BOLT - (SEE FIG. 16)		REF
			-OOO-		
		*	IAW C-12-114-000/CF-439		

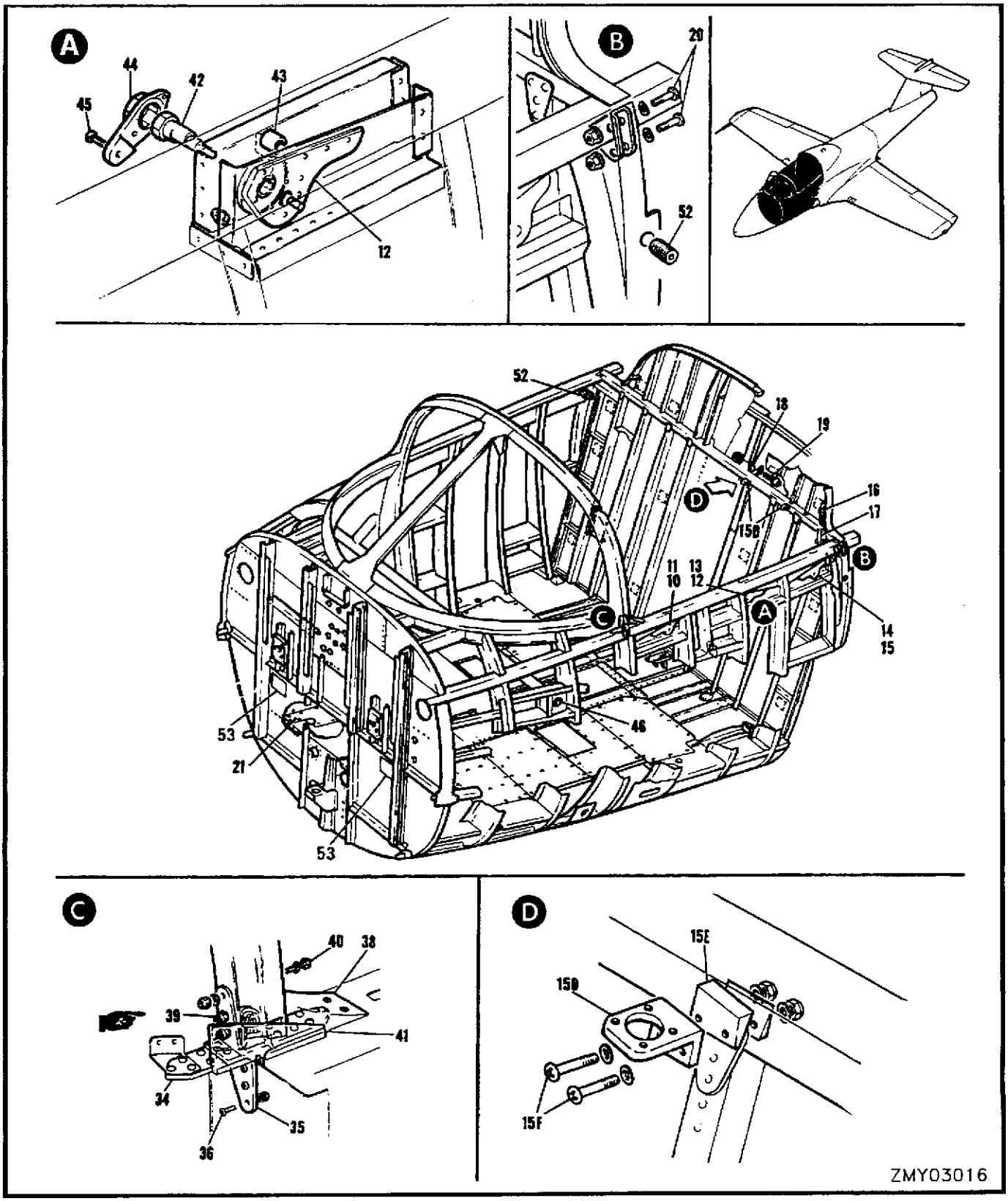

FIGURE 21 (SHEET 1) COCKPIT STRUCUTRE AND FLOOR

	FIGURE AND INDEX NUMBER	GROUP		FUSELAGE	EFFEC-TIVITY	UNITS PER ASSY
		MAJOR ASSEMBLY		COCKPIT STRUCUTRE & FLOOR		
		PART NUMBER		1 2 3 4 5 6 7 NOMENCLATURE		
	21 -	41A-35007		COCKPIT GENL ASSY - FUSELAGE (SEE FIG. 16)		NP
		41A-35071		.KEEL STRUCTURE INSTL - COCKPIT		NP
		41A-35071-2		..KEEL STRUCTURE ASSY - COCKPIT LH		1
		41A-35071-4		..KEEL STRUCTURE ASSY - COCKPIT RH		1
	- 1	41A-35071-32		...HALF HINGE - (PORT)		1
R	- 2	214-16D		...RECEPTACLE - (V71286) (PORT)		3
R	- 3	214-16D		...RECEPTACLE - (V71286) (STBD)		17
	- 4	41A-35071-110		..BRACKET - RIG PIN		1
	- 5	NAS623-3-2		..SCREW		2
		AN960PD10		..WASHER		2
		MS21042L3		..NUT		2
	- 6	AN743-13		..CLAMP		8
		41A-35029		.BULKHEAD ASSY - FUSELAGE STA 149 PRESSURE		1
		41A-35029-4		..BULKHEAD ASSY - LOWER PORTION		1
	- 7	41A-35029-98		...CHANNEL		1
	- 8	MS27037-1-09		...SCREW		2
		AN960PD10L		...WASHER		2
		MS21042L3		...NUT		2
R	- 9	214-16D		...RECEPTACLE - (V71286)		13
		41A-35029-170	*	..BRACKET ASSY		2
	- 9A	41A-35029-172	*	...BRACKET		1
	- 9B	NAS43DD3-14		...SPACER		1
	- 9C	NAS43DD3-24		...SPACER		2
	- 9D	MS27039-1-14	*	..SCREW		1
	- 9E	MS27039-1-16		..SCREW		2
		AN960PD10	*	..WASHER		3
		41A-35097-36		.INTERCOSTAL ASSY - FUS STA 177-187 LH		1
		41A-35097-37		.INTERCOSTAL ASSY - FUS STA 177-187 RH		1
	-10	41A-30056		..BEARING - CANOPY ROLLER		1
	-11	41A-30055		..BEARING - CANOPY ROLLER LH		1
		41A-30055-1		..BEARING - CANOPY ROLLER RH		1
		41A-35097-32		.INTERCOSTAL ASSY - FUS STA 196-206 LH		1
		41A-35097-33		.INTERCOSTAL ASSY - FUS STA 196-206 RH		1
	-12	41A-30056		..BEARING - CANOPY ROLLER		1
	-13	41A-30061		..BEARING - CANOPY ROLLER LH		1
		41A-30061-1		..BEARING - CANOPY ROLLER RH		1
		41A-35097-28		.INTERCOSTAL ASSY - FUS STA 206-215 LH		1
		41A-35097-29		.INTERCOSTAL ASSY - FUS STA 206-215 RH		1
	-14	41A-30056		..BEARING - CANOPY ROLLER		1
	-15	41A-30055		..BEARING - CANOPY ROLLER LH		1
		41A-30055-1		..BEARING - CANOPY ROLLER RH		1
		41A-35037		.BULKHEAD INSTL - REAR PRESSURE		NP
		41A-35037-2		..WEB ASSY - REAR PRESSURE BULKHEAD LOWER		1
	-15A	41A-35037-20		...WEB - LOWER		1
R	-15B	214-16D		...RECEPTACLE - (V71286)		2
	-15C			DELETED		
	-15D	41A-35037-228		..BRACKET	176-	2
	-15E	41A-35037-236		..SHIM - FORWARD	176-	2
		41A-35037-232		..SHIM - REAR	176-	2
	-15F	MS27039-1-16		..SCREW	176-	4
		AN960D10L		..WASHER	176-	8
		MS21042L3		..NUT	176-	4
R	-15G	FCB20441		..FITTING - (V83624) (FUEL CELL KEYHOLE)		10
		FCC20458		..PIN ASSY - (DOM) (FUEL CELL HANGER)		10
R	-15H	FCB20104		...PLATE - (V83624)		1
R	-15J	FCB20459		...PIN - (V83624)		1
	-15K	MS29513-12		...O-RING		1
		AN960D516		...WASHER		1
	-15M	MS35649-2314		...NUT		1
R	-15N	AC356-518		...LOCK NUT - (V83624)		1
			*	IAW C-12-114-000/CF-321		

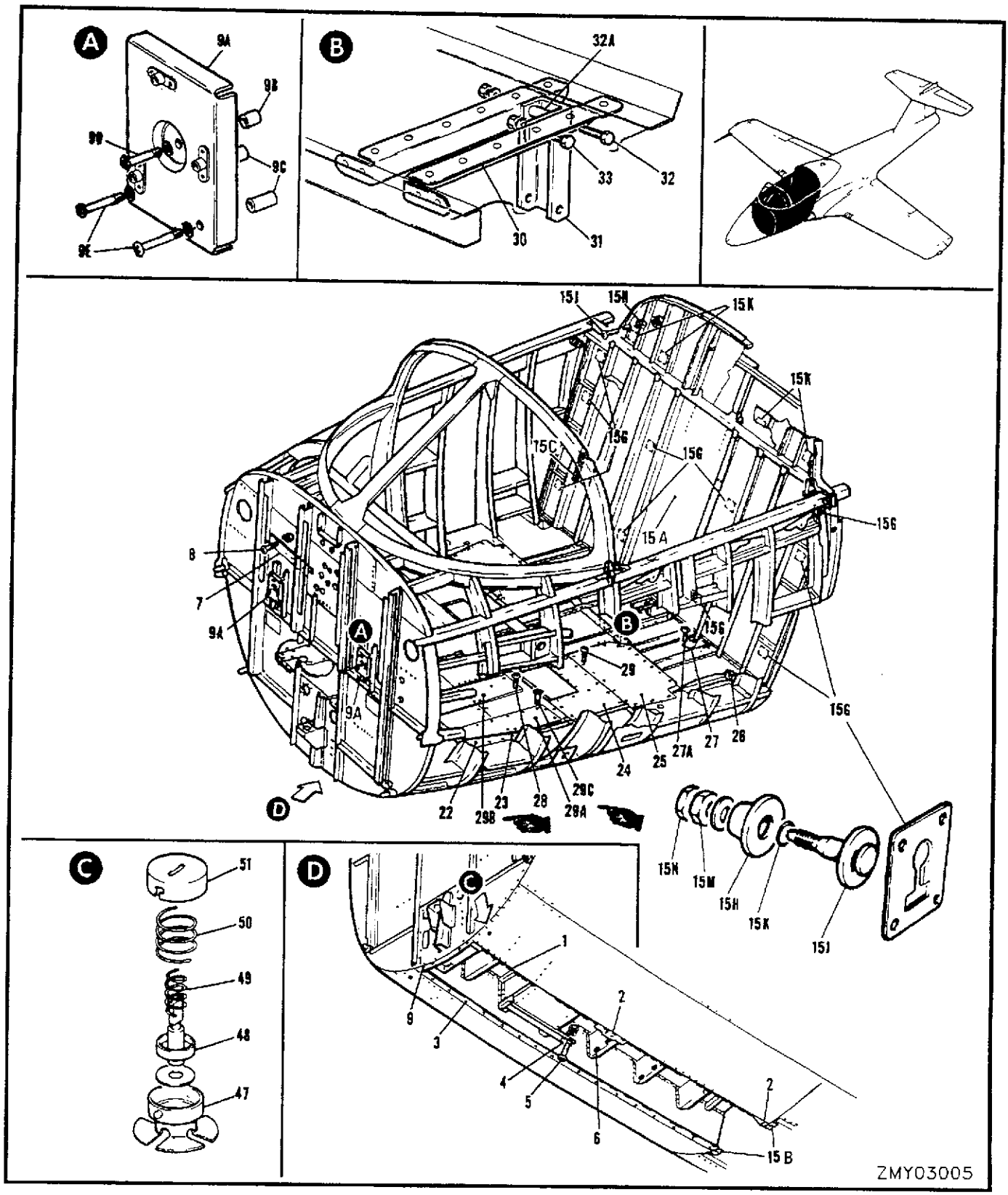

FIGURE 21 (SHEET 2) COCKPIT STRUCTURE AND FLOOR

FIGURE AND INDEX NUMBER	GROUP	FUSELAGE	EFFEC-TIVITY	UNITS PER ASSY
	MAJOR ASSEMBLY	COCKPIT STRUCTURE AND FLOOR		
	PART NUMBER	1 2 3 4 5 6 7 NOMENCLATURE		
21 - 15N	41A-35037-4	..WEB ASSY - REAR PRESSURE BULKHEAD UPPER		1
- 15P	AN743-12	...CLAMP		1
- 15Q	MS27039-1-08	...SCREW		1
	AN960D10L	...WASHER		1
	MS21042L3	...NUT		1
- 15R	FCB20441	...FITTING - (V83624) (FUEL CELL KEYHOLE)		4
	FCC20458	...PIN ASSY - (DOM) (FUEL CELL HANGER)		4
	FCB20104	....PLATE - (V83624)		1
	FCB20459	....PIN - (V83624)		1
	MS29513-12	....O-RING		1
	AN960D516	....WASHER		1
	MS35649-2314	....NUT		1
	AC356-518	....LOCK NUT - (V83624)		1
- 16	41A-35087	..BLOCK ASSY - PRESSURE BULKHEAD SEALING LH		1
	41A-35087-1	..BLOCK ASSY - PRESSURE BULKHEAD SEALING RH		1
- 17	NAS221-12	..SCREW		2
- 18	41A-35085	..FITTING - REAR PRESSURE BULKHEAD CONTROL BOX		2
- 19	MS20004-10	..BOLT		4
	MS20002C4	..WASHER		4
	AN960PD416	..WASHER		4
	MS21042L4	..NUT		4
- 20	NAS1103-5	..BOLT		2
	AN960D10	..WASHER		2
	MS21042L3	..NUT		2
	41A-35020	.FLOOR INSTL - COCKPIT		NP
- 21	41A-35020-22	..PANEL - FLOOR (STBD) (I)		1
- 22	41A-35020-8	..PANEL - FLOOR LH (I)		1
	41A-35020-9	..PANEL - FLOOR RH (I)		1
- 23	41A-35020-10	..PANEL - FLOOR LH (I)		1
	41A-35020-11	..PANEL - FLOOR RH (I)		1
- 24	41A-35020-12	..PANEL - FLOOR LH (I)		1
	41A-35020-13	..PANEL - FLOOR RH (I)		1
- 25	41A-35020-14	..PANEL - FLOOR (PORT) (I)		1
	41A-35020-16	..PANEL - FLOOR (STBD) (I)		1
- 26	41A-95219-10	..BRACKET ASSY - ANTI-G VALVE MOUNTING PORT		1
	41A-95219-12	..BRACKET ASSY - ANTI-G VALVE MOUNTING STBD		1
- 27	41A-35020-88	..PLATE - COVER (PORT)		1
- 27A	MS35207-262	..SCREW - (COVER PLATE RETAINING)		2
R - 28	NAS6203-2	..BOLT - (INTERCHANGEABLE PANEL RETAINING)		57
R - 29	NAS6203-2	..BOLT - (INTERCHANGEABLE PANEL RETAINING)		92
-29A	41A-35020-108	..HEEL PLATE (LH)		1
	41A-35020-109	..HEEL PLATE (RH)		1
-29B	41A-35020-106	..HEEL PLATE (LH)		1
	41A-35020-107	..HEEL PLATE (RH)		1
-29C	MS24694-54	..SCREW		24
	41A-90452	.BRACKET INSTL - FLIGHT CONTROL RIGGING		NP
- 30	41A-90452-2	..BRACKET - FLIGHT CONTROL RIGGING LH		1
	41A-90452-3	..BRACKET - FLIGHT CONTROL RIGGING RH		1
- 31	41A-90452-4	..CHANNEL - FLIGHT CONTROL RIGGING BRACKET		1
- 32	NAS1103-22	..BOLT		1
- 32A	NAS43DD3-64	..SPACER		1
- 33	NAS1103-3	..BOLT		1
	AN960PD10	..WASHER		2
	MS21042L3	..NUT		2
- 34	41A-35078	.FITTING - WINDSHIELD FORK ATTACHMENT LH		1
	41A-35078-1	.FITTING - WINDSHIELD FORK ATTACHMENT RH		1
- 35	41A-35097-144	.SHIM - FORK FITTING		4
- 36	MS27039-1-16	.SCREW - (FITTING RETAINING)		8
	AN960PD10	.WASHER		8
	MS21042L3	.NUT		8
R - 37		DELETED		
R		DELETED		
- 38	41A-35157	.BLOCK - WINDSHIELD CORNER LH		1
	41A-35157-1	.BLOCK - WINDSHIELD CORNER RH		1
- 39	NAS623-3-24	.SCREW		4
- 40	NAS623-3-26	.SCREW		2
	AN960PD10	.WASHER		6
	MS21042L3	.NUT		6

	FIGURE AND INDEX NUMBER	GROUP		FUSELAGE	EFFEC-TIVITY	UNITS PER ASSY
		MAJOR ASSEMBLY		COCKPIT STRUCTURE AND FLOOR		
		PART NUMBER		1 2 3 4 5 6 7 NOMENCLATURE		
R	21	HL218-6-23	*	.PIN		1
R		H14-3	*	.NUT		1
R		NO NUMBER	*	.SPACER - (MADE FROM QQ-A-22516)		1
	-41	41A-35146		.BLOCK - WINDSHIELD FRAME & UPPER LONGERON SEALING LH		1
		41A-35146-1		.BLOCK - WINDSHIELD FRAME & UPPER LONGERON SEALING RH		1
	-42	41A-30058		.STUD - CANOPY ROLLER SPECIAL (FUS STA 184, 198 & 212)		6
	-43	41A-30057		.ROLLER ASSY - CANOPY LOCK		6
		41A-30057-2		..ROLLER - CANOPY LOCK		1
		41A-30057-4		..BUSHING - CANOPY LOCK ROLLER		1
	-44	41A-30059		.PLATE ASSY - CANOPY ROLLER LOCK		6
	-45	MS27039-1-11		.SCREW		6
	-46	41A-35091-2		.TUBE ASSY - WELDED CROSS		1
		44-A17830		.VALVE ASSY - DRAIN		2
	-47	44-A17834		..HOUSING - VALVE		1
	-48	44-A17833		..PLUNGER - VALVE		1
		44-A17835		..WASHER - RUBBER		1
	-49	44-A17831		..SPRING		1
	-50	44-A17832		..SPRING		1
	-51	44-A17836		..COVER - VALVE		1
	-52	AN565A820H8		.SET SCREW - (HOISTING HOLE PLUG)		2
	-53	8001		DECAL		1
				-OOO-		
			*	IAW C-12-144-000/CF-530		

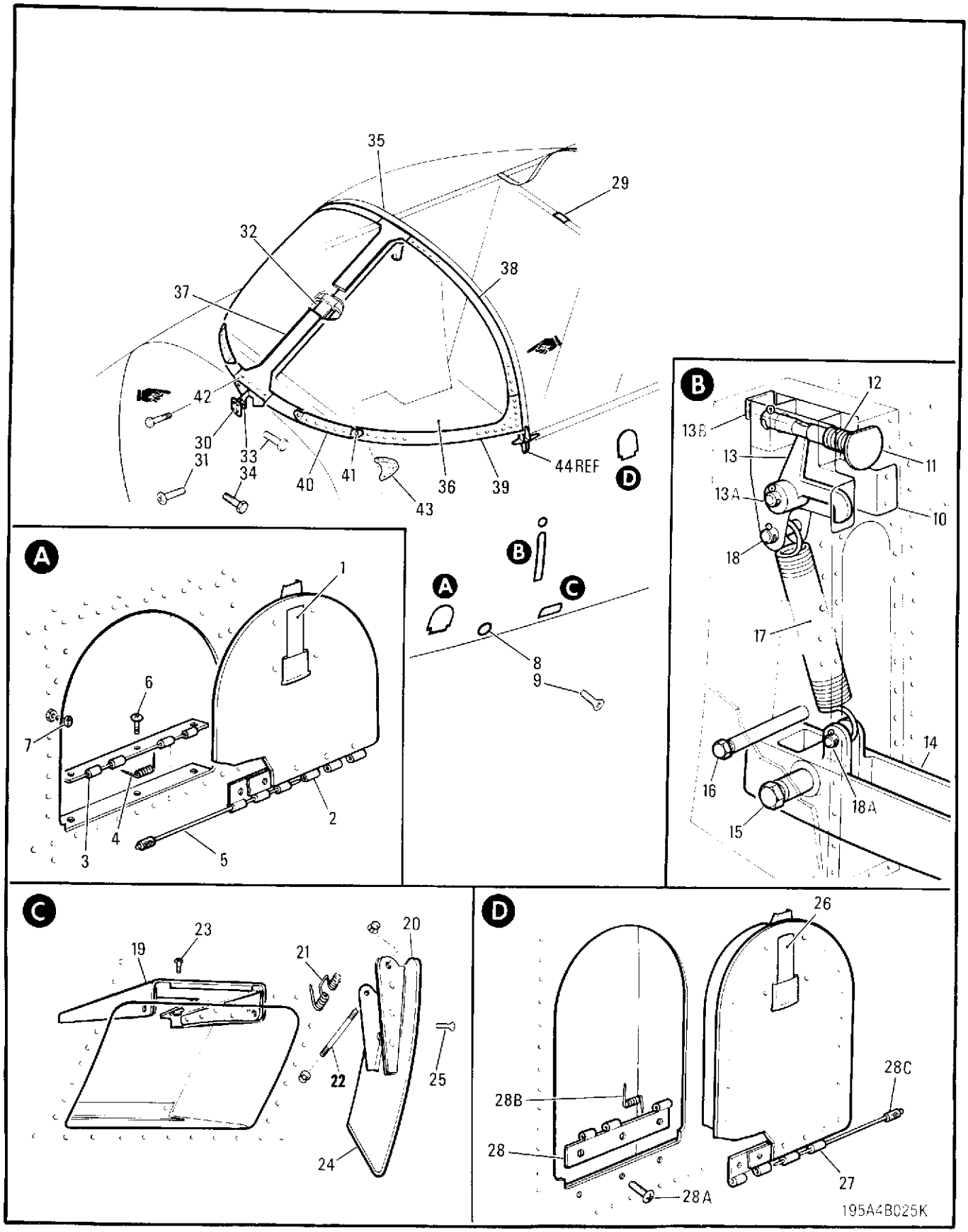

FIGURE 22 COCKPIT DOORS, STEP & WINDSHIELD

	FIGURE AND INDEX NUMBER	GROUP		FUSELAGE	EFFEC-TIVITY	UNITS PER ASSY
		MAJOR ASSEMBLY		COCKPIT DOORS, STEP & WINSHIELD		
		PART NUMBER		1 2 3 4 5 6 7 NOMENCLATURE		
	22 -	41A-35007		COCKPIT GENL ASSY - FUSELAGE (SEE FIG. 21)		REF
		41A-35007-42		.DOOR ASSY - CANOPY EMERGENCY JETTISON (INTERCHANGEABLE)		1
R	- 1	H5000-2-072-102		..LATCH ASSY - (V83014)		1
		41A-35007-54		..PACKING - HINGE		1
	- 2	41A-35007-44		..HALF HINGE		1
	- 3	41A-35007-46		.HALF HINGE		1
	- 4	41-30122		.SPRING - DOOR HINGE		1
R	- 5	S1267-9-500		.PIN ASSY - (V88308)		1
	- 6	NAS623-3-2		.SCREW - (HINGE RETAINING)		3
		AN960PD10		.WASHER		3
		MS21042L3		.NUT		3
	- 7	MS27980-15N		.STUD		2
R		22K2-02		.NUT - (V72962)		2
	- 8	41A-35007-234		.DOOR ASSY - THROTTLE CONTROL (I)		1
	- 9	NAS1202-3		.BOLT		8
		41A-35007-248		.LATCH ASSY - COCKPIT STEP LH		1
		41A-35007-249		.LATCH ASSY - COCKPIT STEP RH		1
	-10	41A-35118-2		..BRACKET ASSY - LATCH LH		1
		41A-35118-3		..BRACKET ASSY - LATCH RH		1
	-11	41A-30096		..BUTTON - COCKPIT STEP LATCH		1
	-12	41-30097		..SPRING - STEP LATCH COMPRESSION		1
		MS24665-132		..COTTER PIN		1
	-13	41A-30095		..LATCH - COCKPIT STEP		1
	-13A	MS20392-3C21		..PIN - (LATCH RETAINING)		1
		MS24665-132		..COTTER PIN		1
	-13B	41A-35007-310		.SHIM		AR
	-14	41A-30086		.STEP - COCKPIT LH		1
		41A-30086-1		.STEP - COCKPIT RH		1
	-15	41A-30099		.BOLT - COCKPIT STEP MOUNTING		2
		NAS43DD5-48		.SPACER		2
	-16	AN4-25A		.BOLT - (COCKPIT STEP STOP)		2
		NAS43-4-129		.SPACER		2
		AN960PD416		.WASHER		4
		MS21042L4		.NUT		4
	-17	41A-35164		.SPRING - COCKPIT STEP EXTENSION		2
	-18	MS20392-2C21		.PIN - (SPRING RETAINING UPPER)		2
	-18A	MS20392-3C21		.PIN - (SPRING RETAINING LOWER)		2
		MS24665-132		.COTTER PIN		4
		41A-35007-52		.HINGE ASSY - COCKPIT LOWER STEP DOOR		2
	-19	41A-35118-24	**	..BRACKET ASSY - HINGE		1
		41A-35118-28	**	...PLATE		2
		41A-35118-22	**	..BRACKET ASSY - HINGE		1
		41A-35118-26	**	...PLATE		2
	-21	41-30102		..SPRING - COCKPIT STEP		1
	-22	NO NUMBER	**	..PIN - HINGE		1
		MS21245-08	**	..NUT		2
	-23	NAS623-2-1		.SCREW		8
	-24	41A-35007-38		.DOOR ASSY - COCKPIT STEP LH (I)		1
		41A-35007-39		.DOOR ASSY - COCKPIT STEP RH (I)		1
	-25	NAS1203-3		.BOLT		4
		K41A-92000-14	*	.DOOR ASSY - CANOPY HANDC RANK	001-010	1
		41A-35007-270		.DOOR ASSY - CANOPY HANDC RANK	011-	1
R	-26	H5000-2-072-102	*	..LATCH ASSY - (V83014)	001-010	1
R		H5000-2-072-132		..LATCH ASSY - (V83014)	011-	1
	-27	K41A-92000-8	*	..HALF HINGE	001-010	1
		41A-35007-294		..HALF HINGE	011-	1
		K41A-92000-16	*	..PACKING	001-010	1
		41A-35007-292		..PACKING	011-	1
			*	IAW C-12-114-000/CF-361		
			**	IAW C-12-114-000/CF-399		

FIGURE AND INDEX NUMBER	GROUP		FUSELAGE	EFFEC-TIVITY	UNITS PER ASSY
	MAJOR ASSEMBLY		COCKPIT DOORS, STEP & WINSHIELD		
	PART NUMBER		1 2 3 4 5 6 7 NOMENCLATURE		
22 -28	K41A-92000-6	*	.HALF HINGE	001-010	1
	41A-35007-296		.HALF HINGE	011-	1
-28A	MS27039-0809	*	.SCREW	001-010	1
	NAS1202-3		.SCREW	011-	3
	AN960PD8L		.WASHER		3
	MS21042L08		.NUT	011-	3
-28B	S1427	*	.SPRING - (V88308)	001-010	1
	S1440		.SPRING - (V88308)	011-	1
-28C	S1267-9-444	*	.PIN ASSY - (V88308)	001-010	1
	S1267-9-440		.PIN ASSY - (V88308)	011-	1
-29	S1125		.NAMEPLATE - (V88308)		1
	K41A-35008-802	**	.WINDSHIELD STRUCTURE INSTL - COCKPIT		NP
-30	41A-35123-22		..BRACKET - LH		1
	41A-35123-23		..BRACKET - RH		1
-31	NAS623-3-4		..SCREW		4
	AN960PD10		..WASHER		4
	MS21042L3		..NUT		4
-32	41A-35133		..POST - WINDSHIELD CENTRE		1
-33	NAS1105-6		..BOLT		1
	AN960PD516		..WASHER		1
	MS21042L5		..NUT		1
R -34	NAS6204-6		..BOLT		1
	AN960PD416		..WASHER		1
	MS21042L4		..NUT		1
-35	41A-35123-2		..FRAME ASSY - WINDSHIELD		1
-36	41A-30203	**	..GLAZING ASSY - WINDSHIELD LH (I)	A	1
	370-403-00	***	..GLAZING ASSY — WINSHIELD LH (F0360)		1
	41A-30203-1	**	..GLAZING ASSY - WINDSHIELD RH (I)	A	1
	370-403-00-1	***	..GLAZING ASSY - WINDSHIELD RH (FO360)		1
-37	K41A-35008-18	**	..STRIP - RETAINER	A	1
	41A-35006-8	***	..STRIP - RETAINER		1
-38	K41A-35008-20	**	..STRIP - RETAINER LH	A	1
	41A-35006-6	***	..STRIP - RETAINER LH		1
	K41A-35008-21	**	..STRIP - RETAINER RH	A	1
	41A-35006-7	***	..STRIP - RETAINER RH		1
-39	K41A-35008-16	**	..STRIP - RETAINER LH	A	1
	41A-35006-4	***	..STRIP - RETAINER LH		1
	K41A-35008-17	**	..STRIP - RETAINER RH	A	1
	41A-35006-5	***	..STRIP - RETAINER RH		1
-40	K41A-35008-40	**	..HEATSHIELD ASSY - WINDSHIELD	A	2
	41A-80202-4	***	..HEATSHIELD ASSY - WINDSHIELD LH		1
	41A-80202-5	***	..HEATSHIELD ASSY - WINDSHIELD RH		1
-41	NAS1003-14A	**	..SCREW	A	140
	MS24694-C57	***	..SCREW		132
-42	NAS1003-12A	**	..SCREW	A	6
	MS24694-C55	***	..SCREW		2
	AN960PD10	**	..WASHER	A	96
	AN960PD10	***	..WASHER		134
	AN960PD10L	**	..WASHER		146
	MS21043-3	**	..NUT	A	96
	MS21043-3	***	..NUT		134
		*	IAW C-12-114-000/CF-361		
		**	IAW C-12-114-000/CF-449		
		***	IAW C-12-114-000/CF-512		
		A	AIRCRAFT WITHOUT C-12-114-000/CF-512 INCORPORATED		

FIGURE AND INDEX NUMBER	GROUP	FUSELAGE	EFFEC-TIVITY	UNITS PER ASSY
	MAJOR ASSEMBLY	COCKPIT DOORS, STEP & WINSHIELD		
	PART NUMBER	1 2 3 4 5 6 7 NOMENCLATURE		
-43	41A-35177	..SCOOP ASSY - RAM AIR (PORT) (IAW C-12-114-000/CF-401)		1
	41A-35177-1	..SCOOP ASSY - RAM AIR (STBD) (IAW C-12-114-000/CF-401)		1
-44	41A-35078	FITTING - WINDSHIELD FORK ATTACHMENT (SEE FIG. 21)		REF

-OOO-

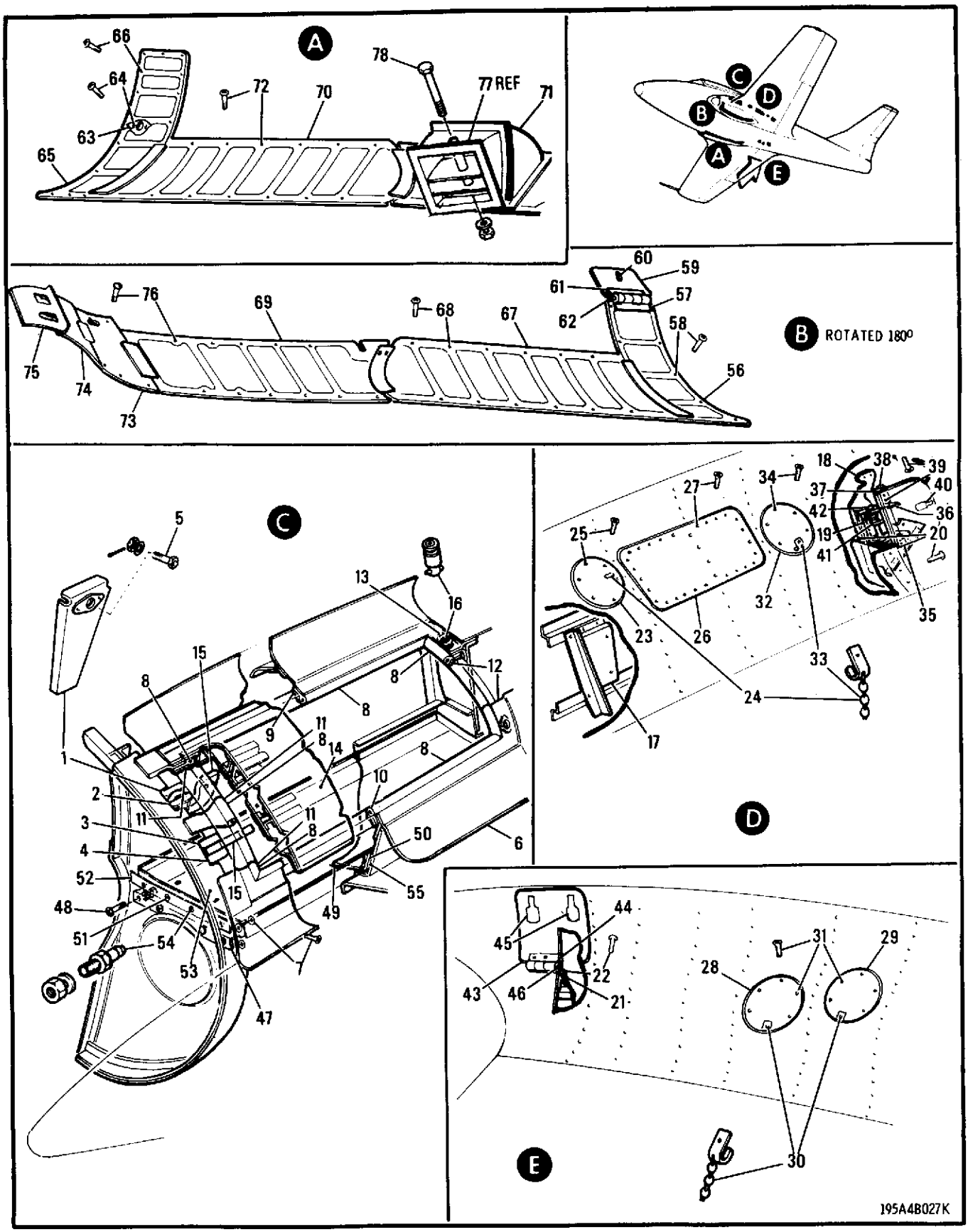

FIGURE 23 FUSELAGE TO WING FAIRINGS

	FIGURE AND INDEX NUMBER	GROUP / MAJOR ASSEMBLY / PART NUMBER	FUSELAGE / FUSELAGE TOWING FAIRINGS / 1 2 3 4 5 6 7 NOMENCLATURE	EFFEC-TIVITY	UNITS PER ASSY
	23 -	41A-35160-804	FAIRING INSTL - FUSELAGE TO WING UPPER LH (FUS STA 229-308) (R) (SEE FIG. 19)		NP
		41A-35160-805	FAIRING INSTL - FUSELAGE TO WING UPPER RH (FUS STA 229-308) (R)		NP
		41A-35159	.FRAME INSTL - FUS STA 229 FAIRING LH		NP
		41A-35159-1	.FRAME INSTL - FUS STA 229 FAIRING RH		NP
	- 1	41A-35159-36	..BRACKET - LH (DOOR HINGE)		1
		41A-35159-37	..BRACKET - RH (DOOR HINGE)		1
	- 2	41A-35159-38	..BRACKET - LH (DOOR HINGE)		1
		41A-35159-39	..BRACKET - RH (DOOR HINGE)		1
	- 3	41A-35159-40	..BRACKET - LH (DOOR HINGE)		1
		41A-35159-41	..BRACKET - RH (DOOR HINGE)		1
	- 4	41A-35159-42	..BRACKET - LH (DOOR HINGE)		1
		41A-35159-43	..BRACKET - RH (DOOR HINGE)		1
	- 5	NAS1103-9D	..BOLT	051-	2
			OR		
		AN3-10	..BOLT	051-	
		AN960C10	..WASHER - (AS REQUIRED WITH AN3-10 BOLT)	051-	2
		AN320-3	..NUT	051-	2
			OR		
		AN310-3	..NUT	051-	
		MS24665-153	..COTTER PIN	051-	2
	- 6	41A-35160-194	.SKIN - FAIRING LOWER LH (FOR SPARES ORDER 41A-35160-414)		1
		41A-35160-414	.SKIN - FAIRING LOWER LH (SPARE FOR 41A-35160-194)		
		41A-35160-195	.SKIN - FAIRING LOWER RH (FOR SPARES ORDER 41A-35160-415)		1
		41A-35160-415	.SKIN - FAIRING LOWER RH (SPARE FOR 41A-35160-195)		
	- 7	NAS1203-3	.BOLT		7
R		A3235-020-24A	.WASHER - (V78533)		7
	- 8	41A-35202	.SEAL - STOWAGE COMPARTME NT LH		1
		41A-35202-1	.SEAL - STOWAGE COMPARTME NT RH		1
	- 9	41A-35160-210	.RETAINER - LH (UPPER SEAL)		1
		41A-35160-211	.RETAINER - RH (UPPER SEAL)		1
	-10	41A-35160-206	.RETAINER - LH (LOWER SEAL)		1
		41A-35160-207	.RETAINER - RH (LOWER SEAL)		1
	-11	41A-35160-376	.RETAINER - LH (FORWARD SEAL)		1
		41A-35160-377	.RETAINER - RH (FORWARD SEAL)		1
	-12	41A-35160-378	.RETAINER - LH (REAR SEAL)		1
		41A-35160-379	.RETAINER - RH (REAR SEAL)		1
R	-13	244-16C	.RECEPTACLE - (V71286)		3
	-14	41A-35160-372	.DOOR ASSY - STOWAGE LH (REPLACEABLE)		1
		41A-35160-373	.DOOR ASSY - STOWAGE RH (REPLACEABLE)		1
	-15	41A-35160-370	..HOOK - (DOOR HINGE)		2
R	-16	4002-7	..STUD - (V71286)		3
			OR		
R		4002-9	..STUD - (V71286)		
R		4002H	..GROMMET - (V71286)		3
R		R4G	..SNAP RING - (V71286)		3
	-17	41A-35160-190	.MOUNTING - (FLAP SELECTOR VALVE LH)		1
		41A-35192	.BRACKET INSTL - GROUND POWER DISCONNECT & DOOR HINGE (LH)		NP
	-18	41A-35192-8	..BRACKET - (RECEPTACLE MOUNTING)	001-120	1
		41A-35192-16	..BRACKET - (RECEPTACLE MOUNTING)	121-	1
	-19	41A-35192-20	..BRACKET ASSY - HINGE (WELDED)		1
		41A-35192-14	..SHIM - HINGE BRACKET		1
	-20	NAS623-3-6	..SCREW - (DOOR HINGE RETAINING)		3
		AN960-10L	..WASHER		3
	-21	41A-35160-344	.HALF HINGE - (ACCESS DOOR RH)		1
	-22	NAS623-3-2	.SCREW - (HINGE RETAINING RH)		1

FIGURE AND INDEX NUMBER	GROUP	FUSELAGE	EFFEC-TIVITY	UNITS PER ASSY
	MAJOR ASSEMBLY	FUSELAGE TOWING FAIRINGS		
	PART NUMBER	1 2 3 4 5 6 7 NOMENCLATURE		
23 -23	41A-35160-266	.DOOR ASSY - MAIN SPAR BOLT ACCESS LH (I)		1
	41A-35160-267	.DOOR ASSY - MAIN SPAR BOLT ACCESS RH (I)		1
-24	NAS1201C6-10	.CHAIN		1
-25	NAS1203-2	.BOLT		6
-26	41A-35160-348	.DOOR - FLAP FOLLOW UP MECH ACCESS LH (I)		1
-27	NAS1203-2	.BOLT		31
-28	41A-35160-263	.DOOR ASSY - HYDRAULIC LINE ACCESS RH (I)		1
-29	41A-35160-265	.DOOR ASSY - ELECTRICAL ACCESS RH (I)		1
-30	NAS1201C6-10	.CHAIN - (RH)		2
-31	NAS1203-2	.BOLT - (DOOR RETAINING RH)		12
-32	41A-35160-260	.DOOR ASSY - HYDRAULIC LINE & XMTR ACCESS LH (I)		1
	41A-35160-261	.DOOR ASSY - HYDRAULIC LINE ACCESS RH (I)		1
-33	NAS1201C6-10	.CHAIN		1
-34	NAS1203-2	.BOLT - (DOOR RETAINING)		6
	41A-35160-278	.DOOR ASSY - EXTERNAL POWER ACCESS LH (I)		1
-35	41A-35160-280	..DOOR - EXTERNAL POWER ACCESS LH		1
-36	41A-35160-282	..BRACKET - HINGE		1
-37	41A-35160-340	..SEAL - DOOR		1
-38	41A-35160-342	..RETAINER - DOOR SEAL		1
-39	NAS1202-4	..BOLT		5
	AN960PD8	..WASHER		5
	MS21043-08	..NUT		5
-40	H5000-2-091-091	..LATCH ASSY - (V83014)		1
-41	41A-35193	.SPRING - EXTERNAL POWER ACCESS DOOR TORSION (LH)		1
-42	MS20392-2C93	.PIN - (DOOR HINGE LH)		1
	AN960C10L	.WASHER - (LH)		1
	MS24665-132	.COTTER PIN - (LH)		1
	41A-35160-362	.DOOR ASSY - ENGINE MOUNT ACCESS RH (I)		1
-43	41A-35160-24	..DOOR - ENGINE MOUNT ACCESS RH		1
-44	41A-35160-168	..HALF HINGE - (ACCESS DOOR RH)		1
-45	H5000-2-064-064	..LATCH ASSY - (V83014)		2
-46	MS20253P2-300	.PIN - (DOOR HINGE RH)		1
	41A-41565	LINER INSTL - STOWAGE FAIRING (SEE FIG. 15)		NP
-47	NO NUMBER	.BRACKET - LINER SUPPORT (LH & RH) (IAW C-12-114-000/CF-235)		2
R -48	MS35206-244	.SCREW		8
	AN960-8	.WASHER		8
	MS21042L08	.NUT		8
-49	41A-41565-2	.LINER ASSY - LH (FAIRING STOWAGE) (MOD)		1
	41A-41565-3	.LINER ASSY - RH (FAIRING STOWAGE) (MOD)		1
-50	80	..VELCRO - (V12288) (PILE 1 IN. WIDE)		AR
-51	XX16205K1105	..SOCKET - (V09736)		4
-52	BS16506K1105	..PLATE - (V09736)		4
-53	MS20230A10	..GROMMET		2
-54	XX16362-0808K110	.BUTTON - (V09737)		8
	AN960C8L	.WASHER		8
	MS21042L08	.NUT		8
-55	80	.VELCRO - (V12288) (HOOK 1 IN. WIDE)		AR
	41A-35161	FAIRING INSTL - FUSELAGE TO WING LOWER LH (SEE FIG. 1)		NP
	41A-35161-1	FAIRING INSTL - FUSELAGE TO WING LOWER RH		NP
	41A-35161-4	.DOOR ASSY - (FUS STA 292 TO FORWARD SPAR LH) (I)		1
-56	41A-35161-30	..PANEL - DOOR		1
-57	41A-35161-22	..HALF HINGE		1

FIGURE AND INDEX NUMBER	GROUP	FUSELAGE	EFFEC-TIVITY	UNITS PER ASSY
	MAJOR ASSEMBLY	FUSELAGE TOWING FAIRINGS		
	PART NUMBER	1 2 3 4 5 6 7 NOMENCLATURE		
23 -	41A-35161-10	.BUTTSTRAP ASSY - (WING FORWARD SPAR LH) (I)		1
-58	NAS623-3-3	.SCREW - (DOOR RETAINING)		11
	41A-35161-8	.DOOR ASSY - (FUS STA 292 TO FORWARD SPAR LH) (I)		1
-59	41A-35161-36	..PANEL - DOOR		1
-60	H5000-2-156-125	..LATCH ASSY - (V83014)		1
	S1246LS7-8-062	..WASHER - (V88308)		4
-61	41A-35161-20	..HALF HINGE		1
-62	S1267-9-400	.PIN ASSY - (V88308) (LH)		1
	41A-35161-6	.DOOR ASSY - (FUS STA 292 TO FORWARD SPAR RH) (I)	001-050	1
	41A-35161-32	..PANEL - DOOR	001-050	1
-63	41A-35161-38	..COVER - (PITOT STATIC DRAIN)	001-050	1
-64	NAS623-3-3	..SCREW	001-050	2
	41A-35161-11	.BUTTSTRAP ASSY - (WING FORWARD SPAR RH) (I)		1
-65	41A-35161-40	.DOOR - (FUS STA 292 TO FWD SPAR RH) (I)	051-	1
-66	NAS623-3-3	.SCREW - (DOOR RETAINING)		16
-67	41A-35161-80	.DOOR ASSY - LH (FWD TO MAIN SPAR) (I)		1
	41A-35161-28	..DOOR - (LH)		1
	41A-43014-92	..PAD - (RUBBER)		1
R	NO NUMBER	..RUBBER SHEET (MADE FROM MIL-STD-417) (DIMENSION 8 X 19.25) (IAW C-12-114-000/CF-528)		1
	41A-35161-29	.DOOR - RH (FORWARD TO MAIN SPAR) (I)		1
	41A-35161-12	.BUTTSTRAP ASSY - LH (WING MAIN SPAR) (I)		1
	41A-35161-13	.BUTTSTRAP ASSY - RH (WING MAIN SPAR) (I)		1
-68	NAS623-3-3	.SCREW - (DOOR RETAINING)		19
R	AN960PD10L	.WASHER		19
-69	41A-35170-8	.DOOR - (MAIN TO REAR SPAR LH) (I)		1
	41A-35170-16	.DOOR ASSY - (MAIN TO REAR SPAR RH) (I)		1
-70	41A-35170-10	..PANEL - DOOR (RH)		1
	41A-96202-2	..DUCT INSTL - HEAT EXCHANGER COOLING AIR (RH)		NP
-71	41A-96202-46	...DUCT ASSY - HEAT EXCHANGER (RH)		1
	41A-35170-22	.BUTTSTRAP ASSY - (WING REAR SPAR LH) (I)		1
	41A-35170-23	.BUTTSTRAP ASSY - (WING REAR SPAR RH) (I)		1
-72	NAS623-3-3	.SCREW - (DOOR RETAINING)		18
R	AN960PD10L	.WASHER		18
-73	41A-35170-12	.DOOR - LH (REAR SPAR TO SHROUD STRINGER) (INTERCHANGEABLE)		1
	41A-35170-13	.DOOR - RH (REAR SPAR TO SHROUD STRINGER) (INTERCHANGEABLE)		1
	41A-35170-18	.DOOR ASSY - LH (SHROUD STRINGER TO STA 300) (I)	001-050	1
	41A-35170-19	.DOOR ASSY - RH (SHROUD STRINGER TO STA 300) (I)	001-050	1
-74	41A-35170-24	.DOOR ASSY - LH (SHROUD STRINGER) (I)	051-	1
	41A-35170-25	.DOOR ASSY - RH (SHROUD STRINGER) (I)	051-	1
-75	41A-35170-28	.DOOR - LH (STA 300) (I)	051-	1
	41A-35170-29	.DOOR - RH (STA 300) (I)	051-	1
	MS27039-1-08	.SCREW	001-050	20
R	AN960PD10L	.WASHER	001-050	20
-76	MS27039-1-08	.SCREW	051-	23
R	AN960PD10L	.WASHER	051-	23
-77	41A-96202	DUCT ASSY - HEAT EXCHANGER COOLING AIR (SEE FIG. 20)		REF
-78	AN4-30A *	.BOLT		1
	COMM *	.TUBING - AL 5/16X.028X3, 24ST.HA7CG42T3		1
	AN960D4016L *	.WASHER		1
	MS21042L4 **	.NUT		1
		-OOO-		
	*	IAW C-12-114-000/CF-340		

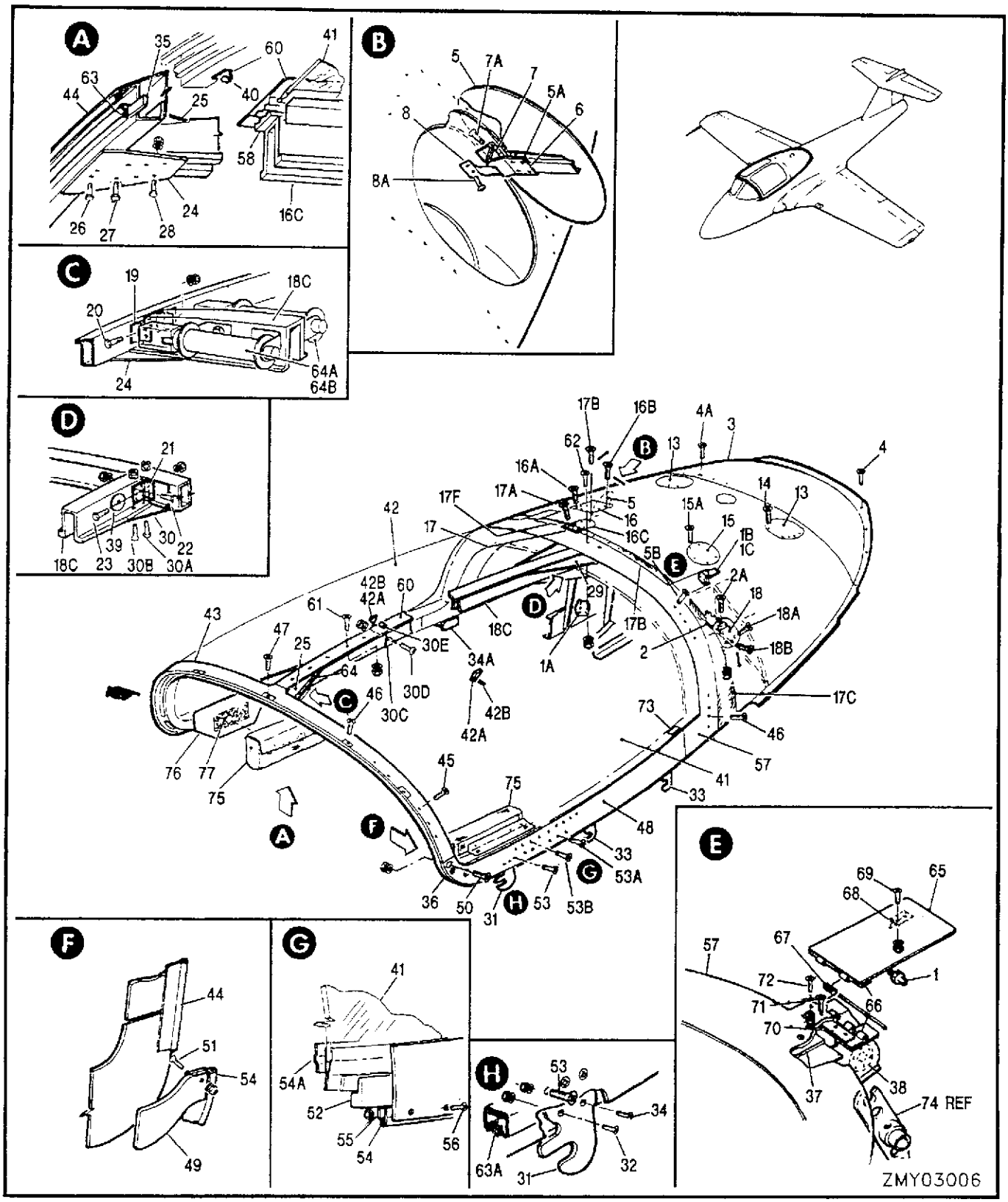

FIGURE 24 CANOPY & FAIRING

FIGURE AND INDEX NUMBER	GROUP	FUSELAGE	EFFEC-TIVITY	UNITS PER ASSY
	MAJOR ASSEMBLY	CANOPY & FAIRING		
	PART NUMBER	1 2 3 4 5 6 7 NOMENCLATURE		
24 -	41A-35031	FAIRING INSTL - CANOPY (SEE FIG. 19)		NP
	41A-35055	.FAIRING STRUCTURE ASSY - (CANOPY)		1
- 1	41A-30173	..STUD - CANOPY HINGE DOOR		2
	AN960D10L	..WASHER		2
	MS21042L3	..NUT		2
- 1A	41A-35055-74	..PLATE - BEARING (FUS STA 230 BL 3RH)		1
	41A-35055-116	..PLATE - BEARING (FUS STA 230 BL 6RH)		1
- 1B	41A-35055-128	.ANGLE		1
- 1C	41A-35031-950	.STRIP - RUBBING		1
	41A-35055-146	..ANGLE		1
- 2	41A-35053	.FITTING - STA 235 LH		1
	41A-35053-1	.FITTING - STA 235 RH		1
- 2A	NAS623-3-14	.SCREW		8
	AN960PD10L	.WASHER		8
	MS21042L3	.NUT		8
- 3	41A-35031-2	.FAIRING ASSY - REAR		1
- 4	NAS333CPA5	.BOLT		28
- 4A	NAS1203-2	.BOLT		15
	41A-35031-40	.DOOR ASSY - FUEL FILLER ACCESS		1
- 5	41A-35031-34	..DOOR - FUEL FILLER ACCESS		1
- 5A	H5000-2-081-164	..LATCH ASSY - (V83014)		2
- 6	41A-35077-4	..ARM - HINGE		1
- 7	41A-35077-12	..HINGE		1
- 7A	NAS1203-2	.BOLT		3
- 8	41A-35077-10	.SPRING		1
- 8A	MS35206-229	.SCREW		2
- 9		DELETED		
-10		DELETED		
-11		DELETED		
-12		DELETED		
-13	41A-35031-102	.DOOR - FUEL VENT ACCESS		2
-14	MS24693-272	.SCREW		12
-15	41A-35031-106	.DOOR - FUEL VENT ACCESS		1
-15A	MS24693-272	.SCREW		8
-16	41A-35031-36	.DOOR - PRESSURE REGULATOR VALVE ACCESS		1
-16A	MS24693-272	.SCREW		9
-16B	S1439-1032-14	.SCREW - (V88308)		1
	MS24665-132	.COTTER PIN		1
	41A-35031-128	.DOOR ASSY - CANOPY LOCK MECHANISM ACCESS		1
-16C	41A-35031-32	..DOOR - ACCESS		1
-17	41A-35031-124	..STRIP - NYLATRON (.030 IN. THICK)		1
-17A	MS24693-272	.SCREW		10
-17B	S1439-1032-14	.SCREW - (V88308)		1
	MS24665-132	.COTTER PIN		1
-17C	41A-35031-120	.STRIP - NYLATRON (.030 IN. THICK)		1
	41A-35031-121	.STRIP - NYLATRON (.030 IN. THICK)		1
-17D	41A-35031-122	.STRIP - NYLATRON (.030 IN. THICK)		1
-17F	41A-35031-126	.STRIP - NYLATRON (.030 IN. THICK)		1
-18	41A-35031-30	.DOOR - CANOPY TORQUE SHAFT ACCESS		1
-18A	MS24693-272	.SCREW		4
-18B	S1439-1032-14	.SCREW - (V88308)		1
	MS24665-132	.COTTER PIN		1
R	41A-35005-814	CANOPY ASSY - COCKPIT (SEE FIG. 16)		1
	41A-35122-800	.CANOPY STRUCTURE ASSY - (I) (COCKPIT)		1
-18C	41A-35122-156	..BEAM		1
-19	41A-35122-72	..TEE - FWD BEAM SUPPORT		2
-20	NAS1003-3	..BOLT		4
	AN960D10L	..WASHER		4
	MS21043-3	..NUT		4
-21	41A-35122-48	..ANGLE - BEAM SUPPORT		1
	41A-35122-49	..ANGLE - BEAM SUPPORT		1
-22	NAS1103-4	..BOLT		12
	AN960PD10L	..WASHER		12
	MS21042L3	..NUT		12

	FIGURE AND INDEX NUMBER	GROUP	FUSELAGE	EFFEC-TIVITY	UNITS PER ASSY
		MAJOR ASSEMBLY	CANOPY & FAIRING		
		PART NUMBER	1 2 3 4 5 6 7 NOMENCLATURE		
R	24 -23	NAS6204-4	..BOLT		6
		AN960D416L	..WASHER		6
		MS21042L4	..NUT		6
	-24	41A-35122-60	..GUSSET - FORWARD LOWER		1
	-25	41A-35122-62	..GUSSET - FORWARD UPPER		1
	-26	NAS1003-6	..BOLT - (DEMIST FITTING)		2
	-27	NAS1003-7	..BOLT - (DEMIST FITTING)		2
	-28	NAS1003-3	..BOLT - (IN GUSSET)		4
		AN960D10L	..WASHER		8
		MS21043-3	..NUT		6
	-29	41A-35122-54	..GUSSET - (REAR UPPER)		1
	-30	41A-35122-154	..GUSSET - (REAR LOWER)		1
	-30A	NAS1103-5	..BOLT		2
	-30B	NAS1203-5	..BOLT		2
		AN960PD10L	..WASHER		4
		MS21042L3	..NUT		4
	-30C	41A-35122-148	..BRACKET - SPOTLIGHT SUPPORT		1
	-30D	NAS623-2-6	..SCREW		2
	-30E	NAS43DD3-16	..SPACER		2
		AN960D8L	..WASHER		2
		MS21042L08	..NUT		2
	-31	41A-30091	..HOOK - (FORWARD PORT)		1
		41A-30091-1	..HOOK - (FORWARD STBD)		1
		41A-35122-92	..SHIM - (UNDER HOOK)		2
		41A-35005-106	..PLATE - FORWARD HOOK LH	026-	1
		41A-35005-107	..PLATE - FORWARD HOOK RH	026-	1
R	-32	NAS6204-7	..BOLT		2
		AN960D416L	..WASHER		2
		MS21042L4	..NUT		2
	-33	41A-30114	..HOOK - PORT (CANOPY)		2
		41A-30114-1	..HOOK - STBD (CANOPY)		2
		41A-35005-108	..PLATE - CENTRE & REAR HOOK	026-	4
		41A-35122-94	..SHIM		4
	-34	NAS623-3-7	..SCREW - (1 IN FWD HOOK)		10
		AN960D10L	..WASHER		10
		MS21042L3	..NUT		10
	-34A	41A-35122-115	..PAD - STRIKING RH		1
	-35	41A-35122-88	..SPACER - (SEAL CHANNEL SUPPORT PORT)		1
		41A-35122-89	..SPACER - (SEAL CHANNEL SUPPORT STBD)		1
	-36	41A-35122-90	..SPACER - (SEAL CHANNEL SUPPORT PORT)		1
		41A-35122-91	..SPACER - (SEAL CHANNEL SUPPORT STBD)		1
	-37	41A-35122-96	..SPACER		2
	-38	41A-35094	..PIN - HINGE		2
	-39	41A-35122-68	..PLATE - BEARING		2
	-40	41A-35122-100	..CLIP		1
R	-41	41A-35056-804	.GLAZING ASSY - CANOPY PORT (I)		1
R	-42	41A-35056-805	.GLAZING ASSY - CANOPY STBD (I)		1
	-42A	41A-35056-40	..HOOK - PLASTIC		2
	-42B	NAS561C812	..PIN		2
	-43	41A-35005-4	.PLATE ASSY - (FWD ARCH)		1
	-44	41A-35005-34	.SEAL		1
		41A-35005-20	.RETAINER - SEAL		1
	-45	NAS560CK3P8	.SCREW		19
	-46	NAS560CK3P9	.SCREW		20
	-47	NAS560CK3P10	.SCREW		5
	-48	41A-35005-2	.PLATE - OUTER PORT		1
		41A-35005-3	.PLATE - OUTER STBD		1
	-49	41A-35005-12	.PACKING - (FWD CORNER)		1
		41A-35005-13	.PACKING - (FWD CORNER)		1
		41A-35005-44	.PACKING - SEAL		1
		41A-35005-45	.PACKING - SEAL		1
		41A-35005-24	.SHIM - (FORWARD HOOK)		2
	-50	NAS560CK3P7	.SCREW		6
		MS21042L3	.NUT		4

FIGURE AND INDEX NUMBER	GROUP	FUSELAGE	EFFEC-TIVITY	UNITS PER ASSY
	MAJOR ASSEMBLY	CANOPY & FAIRING		
	PART NUMBER	1 2 3 4 5 6 7 NOMENCLATURE		
24 -51	NAS1202-6	.BOLT		2
	AN960D8L	.WASHER		2
	MS21042L08	.NUT		2
-52	41A-35005-38	.STRIP - CONTOUR PORT		1
	41A-35005-39	.STRIP - CONTOUR STBD		1
-53	NAS1203-12	.BOLT		22
-53A	NAS560CK3P11	.SCREW		32
-53B	NAS560CK3P10	.SCREW		46
-54	41A-35005-36	.SEAL (MAKE FROM BULK MATERIAL S1333-3)		2
-54A	41A-35005-114	.SEAL		2
-55	41A-35005-22	.RETAINER - SEAL PORT		1
	41A-35005-23	.RETAINER - SEAL STBD		1
-56	NAS1202-2	.BOLT		34
	MS21042L08	.NUT		34
-57	41A-35005-6	.PLATE - OUTER (REAR)		1
	41A-35005-14	.PACKING		1
	41A-35005-15	.PACKING		1
-58	NAS560CK3P8	.SCREW		25
-59	41A-35005-10	.RETAINER - INNER		1
-60	41A-35005-8	.RETAINER - OUTER		1
	41A-35005-16	.PACKING		1
-61	NAS560CK3P11	.SCREW		25
	AN960D10L	.WASHER		24
	MS21043-3	.NUT		24
-62	NAS1203-2	.BOLT - (REAR BRACKETS)		2
	AN960D10L	.WASHER		2
	MS21042L3	.NUT		2
-63	41A-30062	.SEAL - PRESSURE		1
-63A	41A-35005-112	.SHIM - RUBBER		4
R -64	41A-35005-128	.SEAL		1
R	41A-35005-129	.SEAL		1
-64A	1680-21-807-0587	.TOOL & BRACKET ASSY - CANOPY BREAKER		2
-64B	AN3-4A	.BOLT		4
	AN960C10L	.WASHER		4
	MS21042L3	.NUT		4
	41A-35005-80	.DOOR ASSY - (LH HINGE COVER)		1
	41A-35005-81	.DOOR ASSY - (RH HINGE COVER)		1
-65	41A-35005-52	..DOOR - LH		1
	41A-35005-53	..DOOR - RH		1
	41A-35005-54	..PACKING - LH		1
	41A-35005-55	..PACKING - RH		1
-66	41A-35005-60	..HINGE ASSY		1
	41A-35005-61	..HINGE ASSY		1
-67	S1458	..SPRING - (V88308)		1
-68	41A-30174	..HOOK - CANOPY HINGE LH		1
	41A-30174-1	..HOOK - CANOPY HINGE RH		1
	41A-35005-58	..SHIM		AR
-69	NAS1202-3	..BOLT		2
	AN960D8L	..WASHER		2
	MS21042L08	..NUT		2
-70	41A-35005-56	.PACKING		1
	41A-35005-57	.PACKING		1
-71	NAS1203-3	.BOLT		2
-72	NAS1203-4	.BOLT		4
	AN960D10L	.WASHER		6
	MS21042L3	.NUT		6
-73	S1043M	.NAMEPLATE - (V88308)		1
-74	41A-92080-2	LEVER ASSY - CANOPY HINGE (SEE FIG. 26)		REF
-75	NO NUMBER *	CASE - PILOT FLIGHT INFO PUBLICATIONS		2
-76	NO NUMBER *	BRACKET - FLIP CASE MOUNTING		1
-77	80-320 *	VELCRO HOOK (2 IN)		AR
	80-21N320 *	VELCRO PILE (2 IN)		AR
		-OOO-		
	*	IAW C-12-114-000/CF-397		

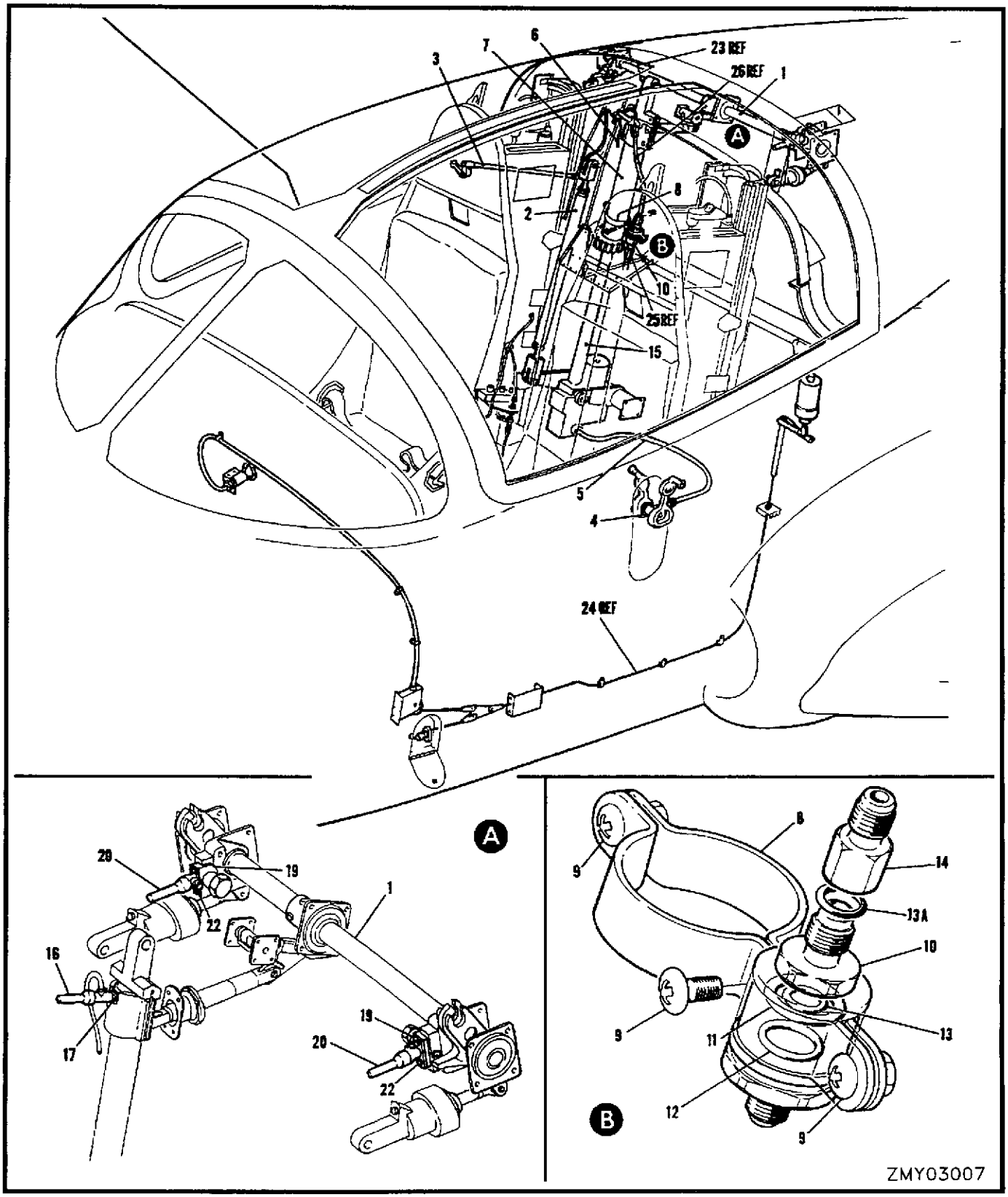

FIGURE 25 CANOPY OPERATING & JETTISON MECHANISM

	FIGURE AND INDEX NUMBER	GROUP	FUSELAGE	EFFEC-TIVITY	UNITS PER ASSY
		MAJOR ASSEMBLY	CANOPY OPERTING & JETTISON MECHANISM		
		PART NUMBER	1 2 3 4 5 6 7 NOMENCLATURE		
	25 -	41A-92002	OPERATING MECHANISM INSTL - CANOPY (SEE FIG. 15)		NP
	- 1	41A-92000	.HINGE MECHANISM INSTL - CANOPY (SEE FIG. 26)		REF
	- 2	41A-92001	.LINKAGE INSTL - CANOPY OPERATING (SEE FIG. 27)		REF
	- 3	41A-92003	.LOCK INSTL - CANOPY (SEE FIG. 28)		REF
	- 4	41A-92007	.CRANK INSTL - CANOPY MECH (SEE FIG. 29)		REF
	- 5	41A-92075	.DRIVE INSTL - CANOPY OPERATING (SEE FIG. 29)		REF
	- 6	41A-92012	.BALLISTIC INSTL - CANOPY EJECTION (SEE FIG. 30)		REF
R	- 7	F893731	.REMOVER - AIRCRAFT CANOPY M1A3 (V36673)		1
		41A-42016	.BRACKET ASSY - COUPLING MOUNTING		1
		41A-42016-2	..BRACKET ASSY - COUPLING MOUNTING		1
	- 8	41A-42016-4	...BRACKET - COUPLING MOUNTING		1
		41A-42016-8	...DECALCOMANIA - WARNING		1
	- 9	MS27039-1-09	..SCREW		3
		AN960PD10L	..WASHER		3
		MS21042L3	..NUT		3
R	-10	315078-4	.COUPLING ASSY - (V69705) (BREAKWAY)		1
R	-11	22558-11	..O-RING - (V69705)		1
R	-12	22558-14	..O-RING - (V69705)		1
R	-13	22559-11	..O-RING - (V69705) (TEFLON BACK UP)		1
	-13A	MS28778-4	.PACKING		1
	-14	AN894D4-3	.BUSHING		1
R	-15	41A-92010-800	.ACTUATOR ASSY - CANOPY OPERATING (MAY BE PURCHASED FROM (V36123))		1
R		E9163M2	..SEALANT - (V36123)		1
R		5-102	..PACKING - PREFORMED (V36123)		2
R	-16	94-5-1A	.RELEASE - FIRING PIN M1A1 (V36673)		1
	-17	AN500A10-4	.SCREW		2
	-18		DELETED		
	-19	41A-92107	.DISTANCE BLOCK - EXTRACT OR PIN		2
R	-20	94-5-1A	.RELEASE - FIRING PIN M1A1 (V36673)		2
	-21		DELETED		
	-22	AN500A10-20	.SCREW		4
	-23	NAS464P5A20	BOLT - (ACTUATOR TO CANOPY) (SEE FIG. 16)		REF
	-24	40276-2	CABLE ASSY - CANOPY EMERGENCY JETTISON (SEE FIG. 31)		REF
	-25	MS28741-4-0210	HOSE - (SEE SECTION 9)		REF
	-26	MS28741-3-0090	HOSE - (SEE SECTION 9)		REF

-OOO-

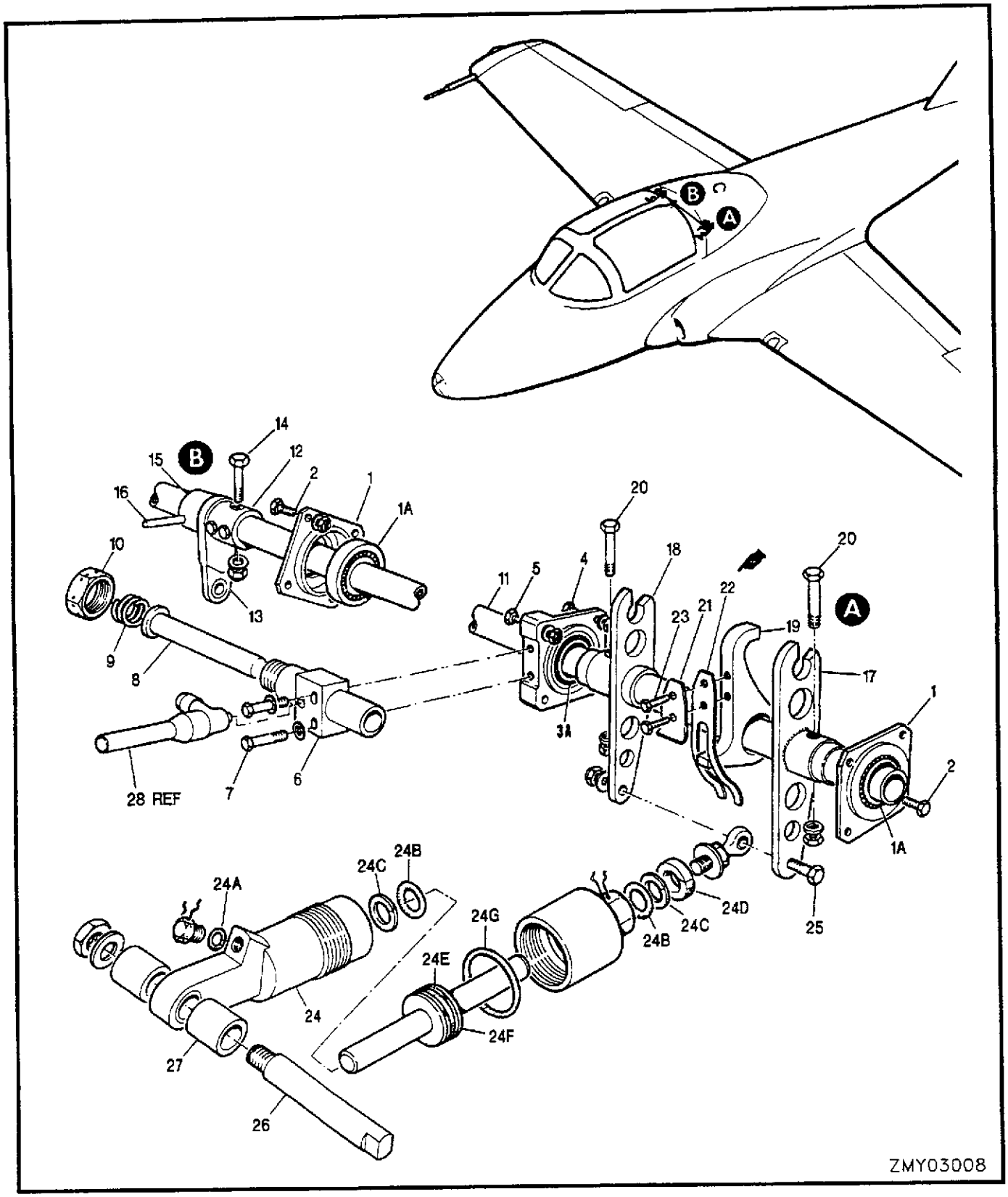

FIGURE 26 CANOPY HINGE MECHANISM

	FIGURE AND INDEX NUMBER	GROUP	FUSELAGE	EFFEC-TIVITY	UNITS PER ASSY
		MAJOR ASSEMBLY	CANOPY HINGE MECHANISM		
		PART NUMBER	1 2 3 4 5 6 7 NOMENCLATURE		
	26 -	41A-92000	HINGE MECHANISM INSTL - CANOPY(SEE FIG. 25)		NP
		41A-92032	.BEARING ASSY - TORQUE TUBE		3
	- 1	41A-92032-2	..RETAINER - TORQUE TUBE BEARING		1
	- 1A	KP23BS	..BEARING - (V21335)		1
R	- 2	NAS6204-3	.BOLT		12
		AN960-416	.WASHER		12
		MS21042L4	.NUT		12
		41A-92023	.BEARING ASSY - TORQUE TUBE		2
	- 3	41A-92023-2	..RETAINER - TORQUE TUBE BEARING		1
	- 3A	KP23BS	..BEARING - (V21335)		1
R	- 4	NAS6204-3	.BOLT		4
R	- 5	NAS6204-11	.BOLT		4
		AN960-416	.WASHER		8
		MS21042L4	.NUT		8
	- 6	41A-92024	.BODY - HINGE STOP		2
	- 7	NAS1003-14H	.BOLT		4
		AN960-10	.WASHER		4
	- 8	41A-92026	.PIN - HINGE STOP		2
	- 9	41A-92011	.SPRING - CANOPY HINGE		2
	-10	41A-92025	.NUT - HINGE STOP		2
	-11	41A-92033	.TORQUE TUBE - HINGE MECHANISM		1
	-12	41A-92079	.LEVER ASSY - CANOPY OPERATING LINKAGE	A	1
		41A-92079-8	.LEVER ASSY - CANOPY OPERATING LINKAGE	B	1
	-13	LHA4	..BEARING - (V73134)		1
	-14	NAS1105-24	.BOLT		3
		AN960-516	.WASHER		3
		MS21042L5	.NUT		3
	-15	41A-92031	.COLLAR - TORQUE TUBE LEVER		1
	-16	NAS561P5-30	.PIN		1
	-17	41A-92080-2	.LEVER ASSY - CANOPY HINGE		2
	-18	41A-92080-4	.LEVER ASSY - CANOPY HINGE		2
	-19	41A-92021	.PAWL - LOCKING		2
R	-20	NAS6204-24	.BOLT		2
		AN960-416	.WASHER		4
		MS21042L4	.NUT		4
	-21	41A-92046	.PLATE - PAWL SPRING BACKING		2
	-22	41A-92034	.SPRING - PAWL		2
	-23	AN501A10-10	.SCREW		4
	-24	C101040	.DAMPER ASSY - (V36123) (CANOPY HINGE) (AS PER 41A-92015) (FOR BREAKDOWN SEE C-13-729-000/MS-000		2
	-24A	MS28778-3	..PACKING		1
	-24B	MS28775-113	..PACKING		2
	-24C	MS28774-113	..RETAINER		2
	-24D	MS28932-2	..WIPER		1
	-24E	MS28775-216	..PACKING		1
	-24F	MS28774-216	..RETAINER		1
	-24G	MS28775-130	..PACKING		1
	-25	NAS1105-15	.BOLT		2
		AN960-516	.WASHER		2
		MS21042L5	.NUT		2
	-26	41A-92154-2	.BOLT - CANOPY HINGE DAMPER		2
	-27	NAS43DD9-63	.SPACER		4
		AN960-616	.WASHER		2
		MS21042L6	.NUT		2
	-28	94-5-1A	RELEASE - FIRING PIN (SEE FIG. 25)		REF
			-OOO-		
			A 26001-26033, 26035-26059 & 26061-26070 B 26034, 26060, 26071 & SUBS		

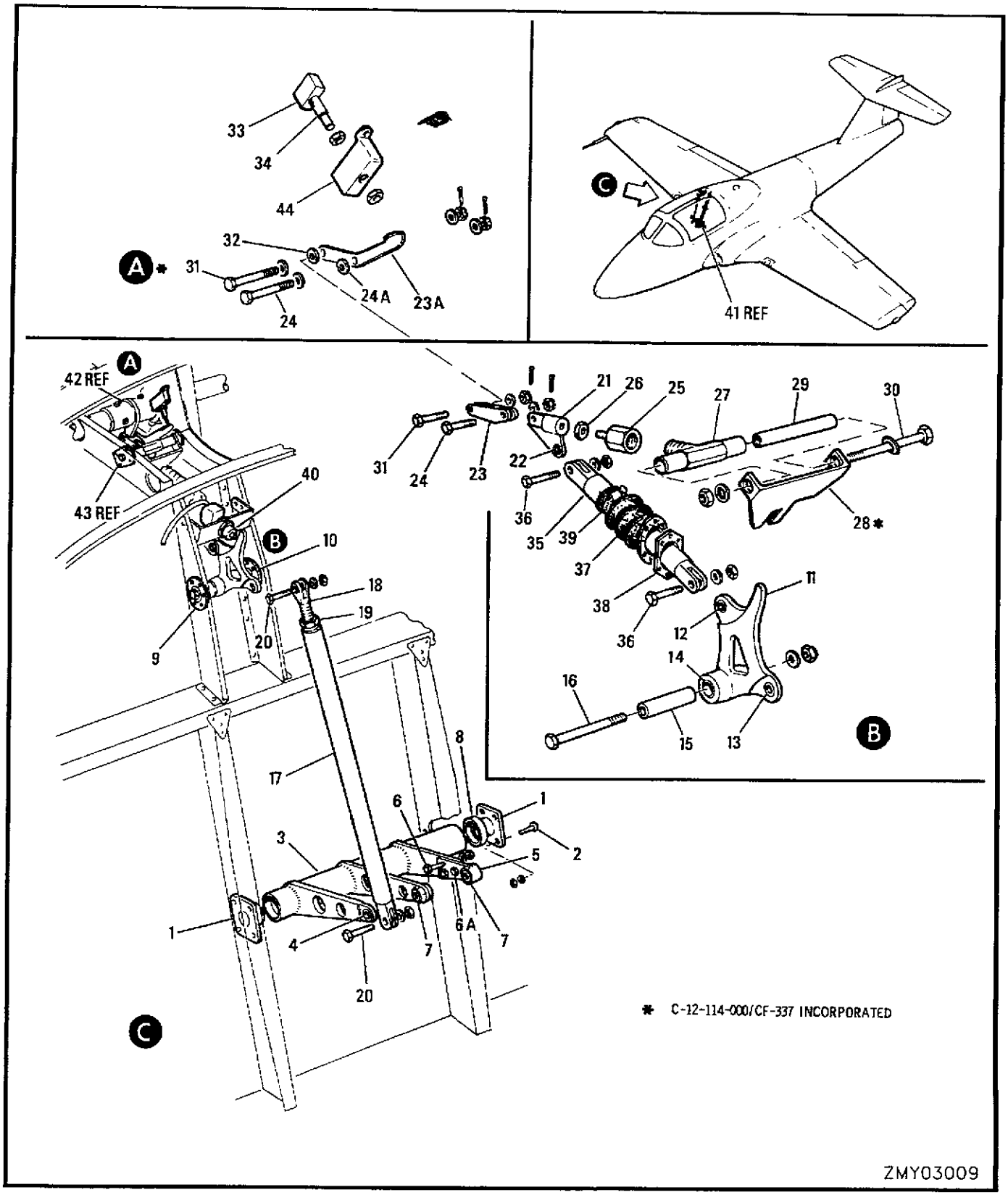

* C-12-114-000/CF-337 INCORPORATED

FIGURE 27 CANOPY OPERATING LINKAGE

	FIGURE AND INDEX NUMBER	GROUP	FUSELAGE	EFFEC-TIVITY	UNITS PER ASSY
		MAJOR ASSEMBLY	CANOPY OPERATING LINKAGE		
		PART NUMBER	1 2 3 4 5 6 7 NOMENCLATURE		
	27 -	41A-92001-800	LINKAGE INSTL - CANOPY OPR (SEE FIG. 25)		NP
	- 1	41A-92040	.BEARING - CANOPY MECHANISM FLANGED		2
	- 2	NAS623-3-3	.SCREW		8
		AN960PD10	.WASHER		8
		MS21042L3	.NUT		8
		41A-92041	.LAYSHAFT ASSY - (CANOPY MECHANISM)		1
	- 3	41A-92041-2	..LAYSHAFT - (CANOPY MECHANISM)		1
	- 4	LHA5	..BEARING - (V73134)		1
	- 5	41A-92051	..LEVER - LAYSHAFT ARM EN D		1
	- 6	NAS1105-7	..BOLT		2
		AN960-516L	..WASHER		2
		MS21042L5	..NUT		2
	- 6A	41A-92041-14	..BOLT - SPECIAL		1
		AN960-516L	..WASHER		1
		AN320-5	..NUT		1
		MS24665-134	..COTTER PIN		1
	- 7	AA607-2	..BUSHING - (V70417)		2
	- 8	AA1801-1	..BUSHING - (V70417)		2
	- 9	41A-92042	.BEARING - CANOPY MECH FLANGED		1
	-10	41A-92042-2	.BEARING - CANOPY MECH FLANGED		1
		41A-92036	.BELLCRANK ASSY - HINGE OPERATING		1
	-11	41A-92036-2	..BELLCRANK - HINGE OPERATING		1
	-12	LHA4	..BEARING - (V73134)		1
	-13	LHA5	..BEARING - (V73134)		1
	-14	AA607-3	..BUSHING - (V70417)		1
	-15	41A-92043	.PIN - CANOPY MECHANISM BELLCRANK		1
R	-16	NAS6204-42	.BOLT		1
		AN970-4	.WASHER		1
		MS21042L4	.NUT		1
	-17	41A-92037-804	.LINK ASSY - ADJUSTABLE		1
	-18	41A-92016-2	..FORK END - CANOPY OPERATING LINKAGE		1
	-19	NAS509-8	..NUT		1
	-20	NAS1105-11	.BOLT		2
		AN960PD516	.WASHER		2
		MS21042L5	.NUT		2
		41A-92140-802	.LOCK ASSY - CANOPY HINGE		1
		41A-92141	..LEVER ASSY - CANOPY HINGE LOCK		1
	-21	41A-92141-2	...LEVER - CANOPY HINGE LOCK		1
	-22	LHA4	...BEARING - (V73134)		1
	-23	41A-92144	..TOGGLE - CANOPY HINGE LOCK		1
	-23A	215-90012	..LEVER		1
R	-24	NAS6204-17D	..BOLT		1
	-24A	NAS43HT4-12	..SPACER		1
	-25	41A-92143-2	..SCREW - CANOPY HINGE LOCK ADJUSTING		1
	-26	41A-92140-2	..NUT - LOCKING		1
	-27	41A-92142	..TRUNNION - CANOPY HINGE		1
	-28	41A-92149-2	.BRACKET - CANOPY HINGE LOCK TRUNNION		1
	-29	41A-92145	.DISTANCE TUBE - CANOPY HINGE LOCK		1
R	-30	NAS6204-50	.BOLT		1
	-31	41A-92001-24	.BOLT		1
	-32	NAS43HT4-12	.WASHER		1
		AN960PD416	.WASHER		2
		MS21042L4	.NUT		2
	-33	MCD7711	.ACTUATOR MICROSWITCH		1
	-34	DT2RA7	.SWITCH - (V94580)		1
	-35	41A-92035-800	.LINK - CANOPY OPERATING		1
R	-36	NAS6204-10	.BOLT		2
		AN960PD416	.WASHER		2
		MS21042L4	.NUT		2

	FIGURE AND INDEX NUMBER	GROUP	FUSELAGE	EFFEC-TIVITY	UNITS PER ASSY
		MAJOR ASSEMBLY	CANOPY OPERATING LINKAGE		
		PART NUMBER	1 2 3 4 5 6 7 NOMENCLATURE		
R	27 -37	3-5618	.SEAL - (V70628) (CANOPY OPRLINKAGE PRESSURE) (AS PER 41A-92038)		1
	-38	41A-92047	.RING - CANOPY OPR LINKAGE SEALING		1
R	-39	802-110	.CLAMP - (V75829)		1
	-40	MS24331-1	.SWITCH ASSY - (S4M CANOPY LIMIT) (SEE SECTION 12)		REF
	-41	41A-92010-800	ACTUATOR ASSY - (SEE FIG. 25)		REF
	-42	41A-92079	LEVER ASSY - CANOPY LINKAGE (SEE FIG. 26)		REF
	-43	41A-35055-116	PLATE - BEARING (SEE FIG. 24)		REF
	-44	41A-35055-188	BRACKET - (RIVETED)		1

-OOO-

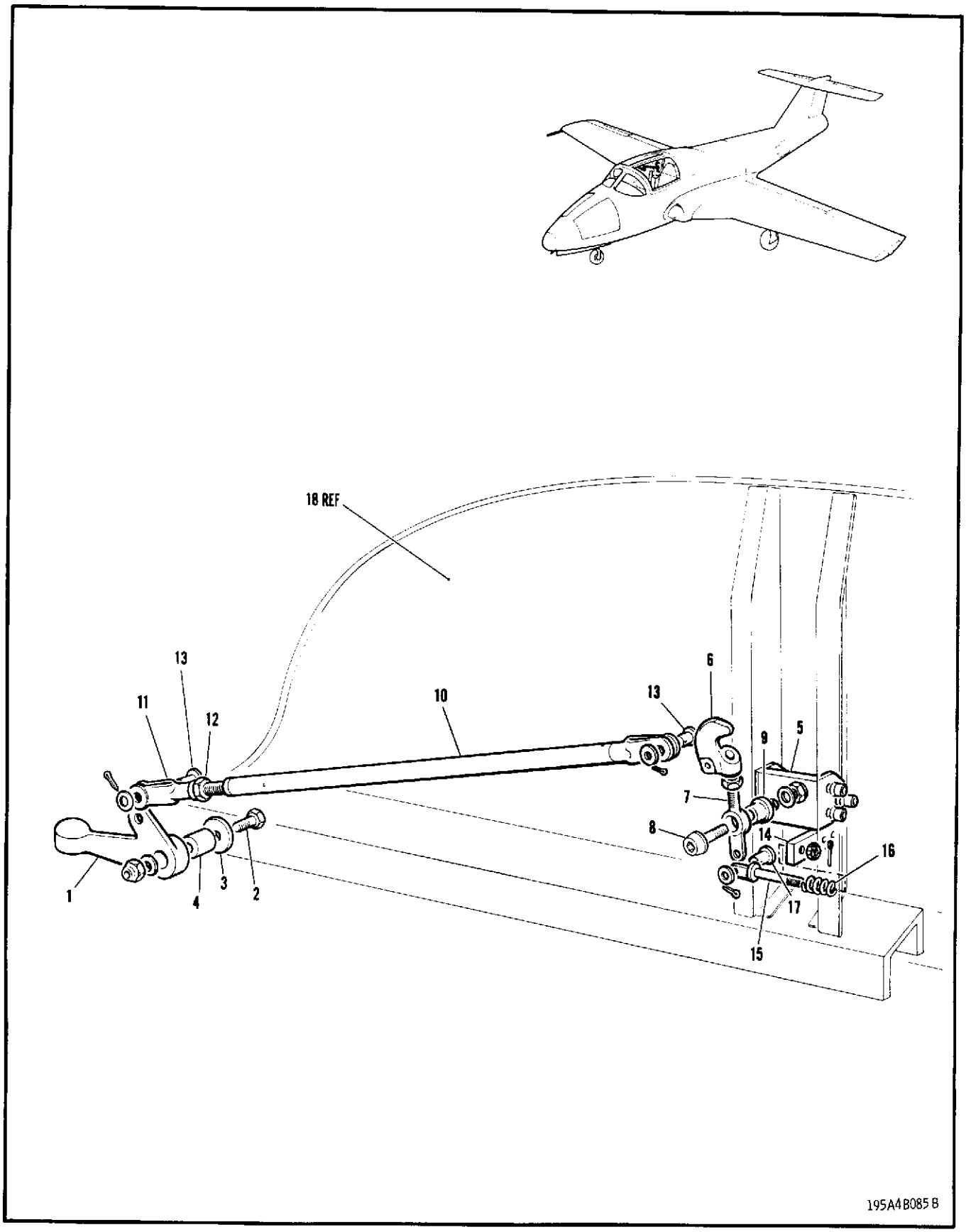

FIGURE 28 CANOPY LOCK

FIGURE AND INDEX NUMBER	GROUP	FUSELAGE	EFFEC-TIVITY	UNITS PER ASSY
	MAJOR ASSEMBLY	CANOPY LOCK		
	PART NUMBER	1 2 3 4 5 6 7 NOMENCLATURE		
28 -	41A-92003	LOCK INSTL - CANOPY (SEE FIG. 25)		NP
- 1	41A-92059	.BELLCRANK - CANOPY INTERLOCK		1
R - 2	NAS6204-12	.BOLT		1
- 3	S1246-16-24-150	.WASHER - (V88308)		1
- 4	41A-92003-54	.SPACER - CANOPY INTERLOCK BELLCRANK (MAKE FROM NAS43HT4-27)		1
	AN960-416	.WASHER		1
	MS21042L4	.NUT		1
- 5	41A-92105	.BRACKET - CANOPY INTERLOCK LATCH		1
	ALPPH-T6-2	.HUCKBOLT - (V01212)		2
	NAS1080-6	.COLLAR		2
	ALPPH-T8-2	.HUCKBOLT - (V01212)		4
	NAS1080-8	.COLLAR		4
	41A-92102	.LATCH ASSY - CANOPY INTERLOCK		1
- 6	41A-92104	..HOOK - CANOPY INTERLOCK (LATCH)		1
- 7	41A-92103	..EYEBOLT - CANOPY INTERLOCK LATCH		1
	AN316-6R	..NUT		1
- 8	MS20006-12	.BOLT		1
- 9	41A-92106	.SPACER - CANOPY INTERLOCK		1
	AN960-616	.WASHER		1
	MS21042L6	.NUT		1
-10	41A-92057	.LINK ASSY - CANOPY INTERLOCK		1
-11	AN486-4	.CLEVIS		1
-12	AN316-4R	.NUT		1
-13	MS20392-2C19	.PIN		2
	AN960-10	.WASHER		2
	MS24665-130	.COTTER PIN		2
-14	41A-92063	.LATCH BRACKET - CANOPY LOCK SPRING		1
-15	AN43B15	.EYEBOLT		1
-16	41A-92066	.SPRING - CANOPY INTERLOCK COMPRESSION		1
	AN310-4	.NUT		1
	MS24665-134	.COTTER PIN		1
-17	MS20392-2C19	.PIN		1
	AN960-10	.WASHER		1
	MS24665-130	.COTTER PIN		1
-18	41A-35037	BULKHEAD INSTL - REAR PRESSURE(SEE FIG. 21)		REF

-OOO-

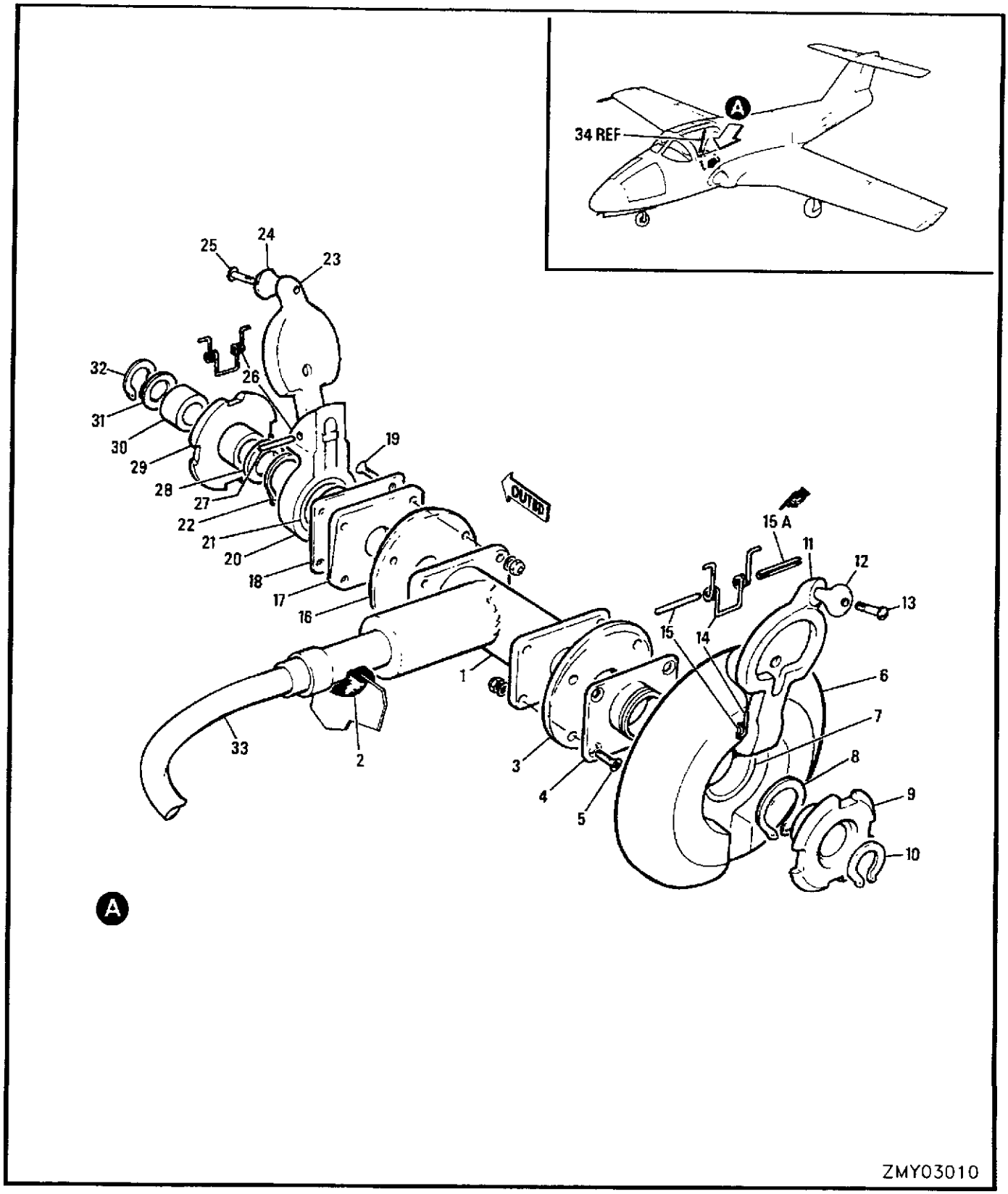

FIGURE 29 CANOPY MANUAL OPERATING CRANK & FLEXIBLE DRIVE

	FIGURE AND INDEX NUMBER	GROUP	FUSELAGE	EFFEC-TIVITY	UNITS PER ASSY
		MAJOR ASSEMBLY	CANOPY MANUAL OPERATING CRANK & FLEXIBLE DRIVE		
		PART NUMBER	1 2 3 4 5 6 7 NOMENCLATURE		
	29 -	41A-92007	CRANK INSTL - CANOPY MECHANISM (MODIFIED IAW C-12-114-000/CF-361) (SEE FIG. 25)	001-010	NP
		41A-92007-802	CRANK INSTL - CANOPY MECHANISM	011-050	NP
		41A-92007-804	CRANK INSTL - CANOPY MECHANISM	051-150	NP
		41A-92007-806	CRANK INSTL - CANOPY MECHANISM	151-	NP
R	- 1	R310M20	.GEARBOX ASSY - (V36123) (MANUAL OPR CANOPY) (IAW 41A-92054)		1
	- 2	MS35489-75	.GROMMET - (CANOPY GEARBOX)		1
	- 3	41A-92007-30	.SPACER - (INBOARD)		1
	- 4	41A-92069-2	.MOUNTING - CLUTCH (INBOARD)		1
	- 5	MS24693-51	.SCREW		4
		AN960-8	.WASHER		4
		MS21042L08	.NUT		4
		41A-92068	.MOUNTING ASSY - CANOPY CRANK (INBOARD)		1
	- 6	41A-92068-2	..MOUNTING - CANOPY CRANK (INBOARD)		1
	- 7	41A-92068-4	..BUSHING - CANOPY CRANK MOUNTING (INBD)		1
	- 8	MS16624-1087	.RING		1
	- 9	41A-92073-2	.CLUTCH PLATE - (INBOARD)		1
	-10	MS16624-1037	.RING		1
		41A-92067-800	.CRANK ASSY - MANUAL (INBOARD)	001-150	1
		41A-92067-802	.CRANK ASSY - MANUAL (INBOARD)	151-	1
		41A-92074-2	..CRANK - MANUAL (INBOARD)	001-150	1
	-11	41A-92074-4	..CRANK - MANUAL (INBOARD) (IAW C-12-114-000/CF-444)	151-	1
	-12	41A-92071	..KNOB - HANDCRANK (INBOARD)		1
R	-13	S1277C4-10	..SCREW - (V88308)		1
	-14	41A-92070	.SPRING - CRANK		1
	-15	NAS561C6-48	.PIN		1
	-15A	MS171606	.PIN - SPRING		1
	-16	41A-92007-32	.SPACER - (OUTBOARD)		1
	-17	41A-92007-34	.PACKING - (OUTBOARD)	011-150	1
	-18	41A-92069-2	.MOUNTING - CLUTCH (OUTBOARD)		1
	-19	MS24693-51	.SCREW		4
		AN960-8	.WASHER		4
		MS21042L08	.NUT		4
		41A-92072	.MOUNTING ASSY - CRANK (OUTBOARD)		1
	-20	41A-92072-2	..MOUNTING - CRANK (OUTBOARD)		1
	-21	41A-92072-4	..BUSHING - MOUNTING CRANK		1
	-22	MS16624-1087	.RING		1
		41A-92067-800	.CRANK ASSY - MANUAL (OUTBOARD)		1
	-23	41A-92074-2	..CRANK - MANUAL (OUTBOARD)		1
	-24	41A-92071	..KNOB - HANDCRANK (OUTBOARD)		1
R	-25	S1277C4-10	..SCREW - (V88308)		1
	-26	41A-92070	.SPRING - CRANK (OUTBOARD)		1
	-27	NAS561C6-22	.PIN		1
	-28	AN960C616	.WASHER - (OUTBD CLUTCH PLATE BEARING)	A	1
	-29	41A-92073-2	.CLUTCH PLATE - (OUTBOARD)		1
	-30	NAS43DD6-9	.SPACER	A	1
	-31	AN960D616L	.WASHER - (OUTBOARD CLUTCH PLATE)	A	1
	-32	MS16624-1037	.RING		1
		41A-92075	DRIVE INSTL - CANOPY OPERATING (SEE FIG.25)		NP
	-33	8022Y0C	.SHAFT ASSY - (97945) (FLEXIBLE) (IAW 41A-92076)		1
R		316-7-6	.CLIP - (V00502)		AR
		NAS623-2-2	.SCREW		AR
		AN960PD8L	.WASHER		AR
		MS21042L08	.NUT		AR
	-34	41A-92010-800	ACTUATOR ASSY - CANOPY OPERATING (SEE FIG. 25)		REF
			-OOO-		
			A 26001-26010 & 26151 & SUBS		

FIGURE AND INDEX NUMBER	GROUP		EFFEC-TIVITY	UNITS PER ASSY
	MAJOR ASSEMBLY	CANOPY MANUAL OPERATING CRANK & FLEXIBLE DRIVE		
	PART NUMBER	1 2 3 4 5 6 7 NOMENCLATURE		
		PAGE DELETED		

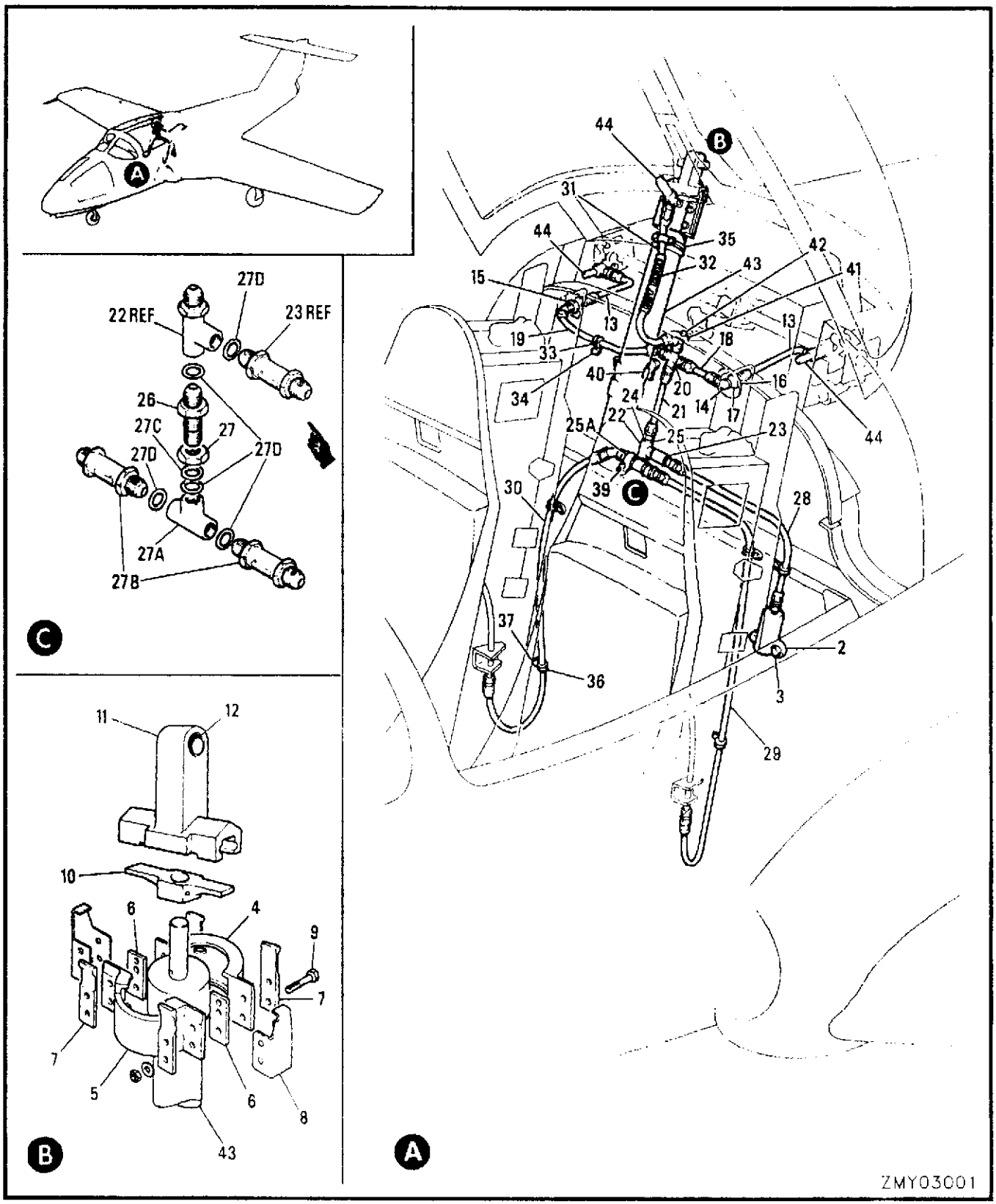

FIGURE 30 CANOPY JETTISON MECHANISM

FIGURE AND INDEX NUMBER	GROUP		FUSELAGE	EFFEC-TIVITY	UNITS PER ASSY
	MAJOR ASSEMBLY		CANOPY JETTISON MECHANISM		
	PART NUMBER		1 2 3 4 5 6 7 NOMENCLATURE		
30 -	41A-92012-800		BALLISTIC INSTL - CANOPY EJECTION (SEE FIG. 25)		NP
- 1			DELETED		
- 2	94-3-1		.INITIATOR - CARTRIDGE ACTUATED M3A2 (V36673)		1
R - 3	NAS6204-3		.BOLT		4
	AN960-416L		.WASHER		4
	41A-92004-802		.REMOVER ASSY - CANOPY		1
			(FOR SPARES ORDER 41A-92004-804)		
	41A-92004-804		.REMOVER ASSY - CANOPY (SPARE FOR 41A-920004-802)		
	41A-92055-802		..CLAMP ASSY - TOP FITTING		1
- 4	41A-92055-14		...CLIP - TOP FITTING (IAW C-12-114-000/CF-398)		1
- 5	41A-92055-18		...CLIP - TOP FITTING (FOR SPARES ORDER 41A-92055-20)		1
	41A-92055-20		...CLIP ASSY - TOP FITTING (SPARE FOR 41A-92055-18)		
- 6	41A-92160-2		...LINK - CANOPY REMOVER		2
- 7	41A-92055-17		...SPRING		4
- 8	C69B47379-1	*	...CLIP		2
- 9	NAS464P4A12	*	...BOLT		4
	AN960-416	*	...WASHER		4
	MS21042L4	*	...NUT		4
-10	41A-92114-2	*	..COLLAR - LOCKING (SCREW HOLE PLUGGED)		1
			(FOR SPARES ORDER 41A-92114-4)		
	41A-92114-4		..COLLAR - LOCKING (SPARE FOR 41A-92114-2)		
	41A-92056-802		..LUG ASSY - SHEAR PIN		1
-11	41A-92056-8		...BUSHING		1
-12	41A-92056-4		...BUSHING		1
-13	AE1002208E0076		.HOSE - BALLISTIC (BLKHD TO FIRING PIN)		2
-14	AN833-4S	**	.ELBOW		1
-15	AN832-4S	**	.UNION		1
-16	MS28778-4	**	.PACKING		2
-17	AN924-4S	**	.NUT		2
-18	AE1002208E0045		.HOSE - BALLISTIC (V69705) (BLKHD PORT TO TEE)		1
-19	AE1680E0087-180		.HOSE - BALLISTIC (V69705) (BLKHD STBD TO TEE)		1
-20	2024-4-4S	**	.TEE - (V69705)		1
-21	AE1002208E0063		.HOSE - BALLISTIC (TEE TO CHECK VALVE)		1
-22	AN938-4C	**	.TEE		1
-23	458-4SS27-6	***	.VALVE - CHECK (86768)		1
-24	AN815-4C	**	.NIPPLE		1
-25	MS28778-4	**	.PACKING		3
-25A	MS21919WDG11	***	.CLAMP		1
-26	AN832-4J	***	.UNION		1
-27	AN6289-J4	***	.NUT		1
-27A	AN938J4	***	.TEE		1
-27B	458-4SS27-6	***	.VALVE - CHECK (86768)		2
-27C	MS28773-04	***	.RETAINER		1
-27D	MS28778-4	***	.PACKING		6
-28	AE1002208E0243		.HOSE - BALLISTIC (CHECK VALVE TO MA3A2)		1
-29	AE1002208E0452		.HOSE - BALLISTIC (CHECK VALVE TO LH SEAT)		1
-30	AE1002352E0460		.HOSE - BALLISTIC (CHECK VALVE TO RH SEAT)		1
-31	AE1002359E0146		.HOSE - BALLISTIC (TEE TO CANOPY REMOVER)		1
-32	2499	**	.DECALCOMANIA - (CDL) (IAW RCAF L85)		1
		*	IAW C-12-114-000/CF-333		
		**	IAW C-12-114-000/CF-428		
		***	IAW C-12-114-OOO/CF-509		

	FIGURE AND INDEX NUMBER	GROUP		FUSELAGE	EFFEC-TIVITY	UNITS PER ASSY
		MAJOR ASSEMBLY		CANOPY JETTISON MECHANISM		
		PART NUMBER		1 2 3 4 5 6 7 NOMENCLATURE		
	30 -33	MS21104D5	*	.CLAMP		1
	-34	NAS623-3-2	*	.SCREW		1
		AN960-10L	*	.WASHER		1
		MS21042L3	*	.NUT		1
	-35	MS21919WDG31	*	.CLAMP		1
	-36	MS21919WDG8	*	.CLAMP		1
	-37	AN520-10R9	*	.SCREW		1
		AN960-10L	*	.WASHER		1
		NAS1021H3	*	.NUT		1
	-38			DELETED		
	-39	MS35206-264	*	.SCREW		1
	-40	MS21914-4	*	.CAP		2
	-41	MS21104D8	*	.CLAMP		1
	-42	MS51958-1	*	.SCREW		1
		AN960-10	*	.WASHER		1
		NAS1291C08	*	.NUT		1
R	-43	F893731	*	REMOVER - AIRCRAFT CANOPY M1A3 (V36673) (SEE FIG. 25)		REF
R	-44	94-5-1A	*	RELEASE - FIRING PIN M1A1 (V36673) (SEE FIG. 25)		REF
				-OOO-		
			*	IAW C-12-114-000/CF-428		

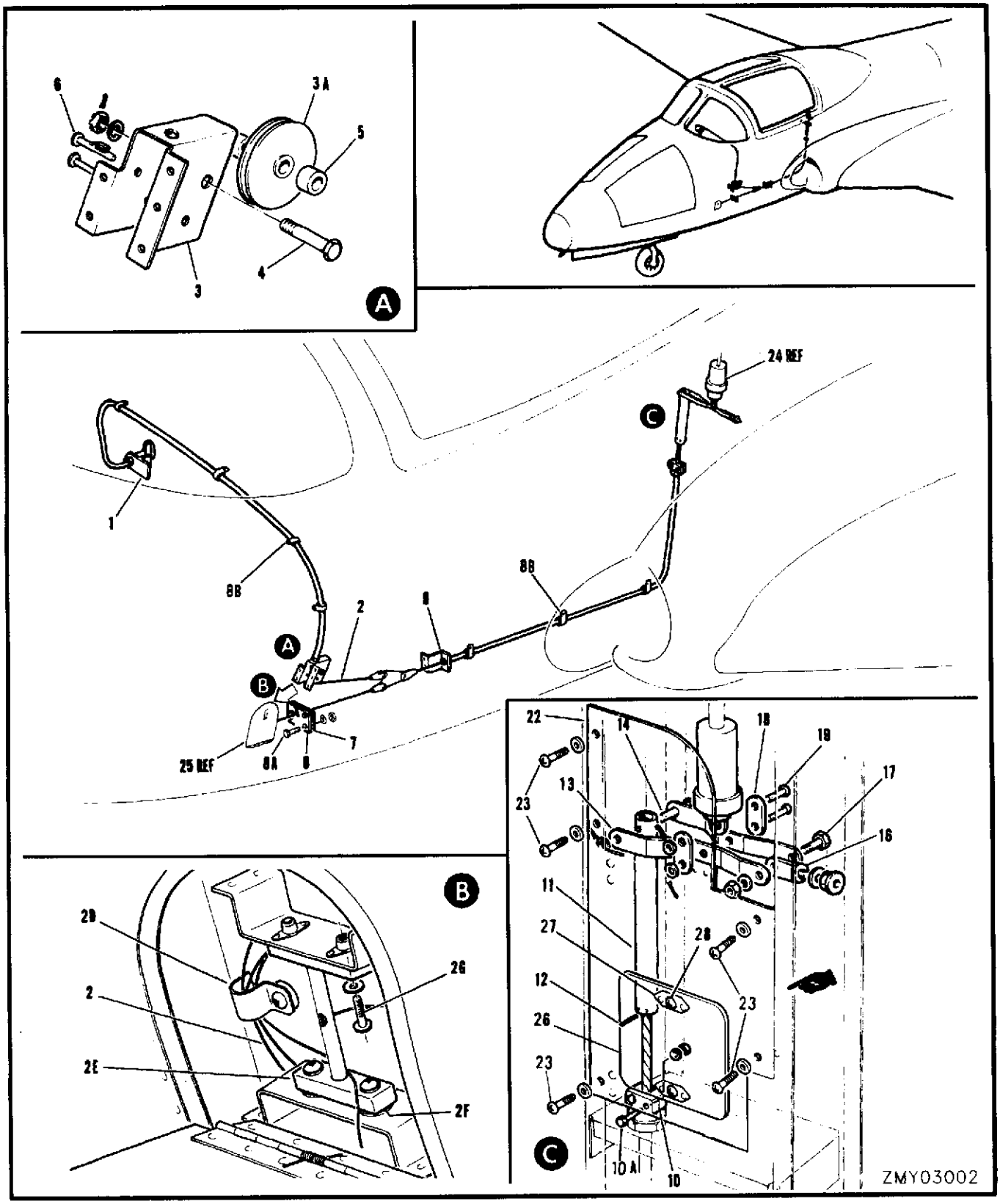

FIGURE 31 CANOPY EMERGENCY JETTISON MECHANISM

FIGURE AND INDEX NUMBER	GROUP	FUSELAGE	EFFEC-TIVITY	UNITS PER ASSY
	MAJOR ASSEMBLY	CANOPY EMERGENCY JETTISON MECHANISM		
	PART NUMBER	1 2 3 4 5 6 7 NOMENCLATURE		
31 -	41A-92090	JETTISON MECH INSTL - CANOPY EMERGENCY (SEE FIG. 15)		NP
- 1	41A-92095-8	.BRACKET - (CANOPY EMERGENCY JETTISON)		1
- 2	40276-2	.CABLE ASSY - (V78710) (CANOPY EMY JETTISON) (IAW 41A-92100-802)		1
- 2A		DELETED		
- 2B		DELETED		
- 2C		DELETED		
- 2D	41A-92096	.CLIP ASSY - CANOPY JETTISON EXTERNAL CABLE		2
- 2E	41A-92090-50	.BLOCK ASSY - CANOPY JETTISON		2
	41A-92090-52	..STRAP - CANOPY JETTISON		1
	41A-92090-54	..BLOCK - (AMS-3209)		1
- 2F	S1246LS17-19-062	.WASHER - (V88308)		AR
- 2G	MS35206-249	.SCREW		4
	AN960D8	.WASHER		4
- 3	41A-92095-6	.BRACKET - PULLEY		1
- 3A	MS20219-2	.PULLEY - (CANOPY JETTISON CABLE)		1
R - 4	NAS6204-13D	.BOLT		1
- 5	NAS43DD4-10	.SPACER		1
	AN960PD416	.WASHER		1
	AN320-4	.NUT		1
	MS24665-7	.COTTER PIN		1
- 6	NAS427K14	.PIN		2
- 7	41A-92095-12	.WASHER - RUBBER (CANOPY JETTISON CABLE)		1
- 8	41A-92095-10	.PLATE - SLOTTED (CANOPY JETTISON CABLE)		1
- 8A	MS35206-245	.SCREW		3
	AN960-8	.WASHER		3
	NAS684A08	.NUT		3
- 8B	AN742-4	.CLAMP		AR
- 9	41A-92095-4	.ZEE - (CANOPY JETTISON CABLE)		1
- 9	41A-92090-16	.FAIRLEAD ASSY - CABLE		1
-10	41A-92090-27	..BLOCK - CABLE FAIRLEAD		2
-10A	NAS1103-8	..BOLT		2
	AN960D10L	..WASHER		2
	MS21042L3	..NUT		2
	41A-92090-18	.TUBE ASSY - CANOPY JETTISON CABLE		1
-11	41A-92090-28	..TUBE - CANOPY JETTISON CABLE		1
-12	NAS561C4-8	..PIN		2
-13	41A-92095-14	.PLATE - CANOPY JETTISON CABLE LEVER		2
-14	1225C6-65	.PIN		1
	AN960PD10L	.WASHER		1
	MS24665-132	.COTTER PIN		1
-15		DELETED		
-16	AN42B3A	.EYEBOLT		1
	AN960PD10L	.WASHER		1
	MS21042L3	.NUT		1
-17	NAS1103-4	.BOLT		1
	AN960PD10L	.WASHER		1
	MS21042L3	.NUT		1
-18	41A-92095-16	.LINK - (CANOPY JETTISON CABLE)		2
-19	MS20392-2C7	.PIN		2
	AN960PD10	.WASHER		2
	MS24665-132	.COTTER PIN		2
-20		DELETED		

	FIGURE AND INDEX NUMBER	GROUP		FUSELAGE	EFFEC-TIVITY	UNITS PER ASSY
		MAJOR ASSEMBLY		CANOPY EMERGENCY JETTISON MECHANISM		
		PART NUMBER		1 2 3 4 5 6 7 NOMENCLATURE		
	31 -21			DELETED		
		NO NUMBER	*	PLATE INSTL - CANOPY EMERGENCY JETTISON INITIATOR LEVER PROTECTIVE COVER		NP
	-22	NO NUMBER	*	.PLATE ASSY - COVER		1
R	-23	MS35206-245	*	.SCREW		5
		AN960PD8L	*	.WASHER		5
	-24	94-3-1		INITIATOR - CARTRIDGE ACTUATED M3A1 (V36673) (SEE FIG. 30)		REF
R	-25	41A35007-42		DOOR ASSY - CANOPY EMERGENCY JETTISON (SEE FIG. 22)		REF
	-26	NO NUMBER	**	COVER		1
	-27	244-16D	**	RECEPTACLE - (V71286)		2
	-28	40S5-4	**	STUD - (V71286)		2
		4002G	**	GROMMET - (V71286)		2
		R4G	**	SNAP RING - (V71286)		2
				-OOO-		
			*	IAW C-12-114-000/CF-430		
			**	IAW C-12-114-000/CF-511		

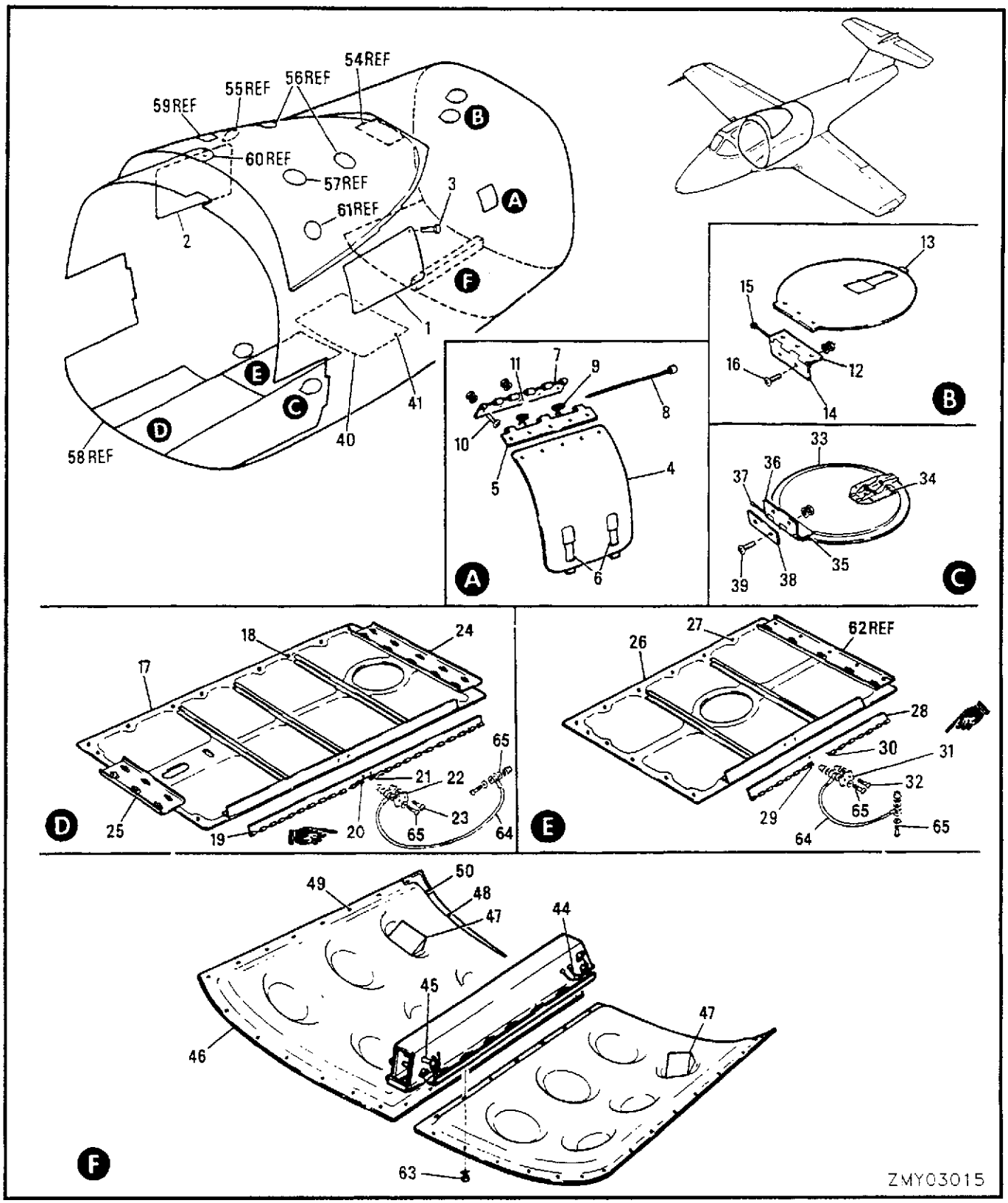

FIGURE 32 CENTRE FUSELAGE ACCESS DOORS

	FIGURE AND INDEX NUMBER	GROUP	FUSELAGE	EFFEC-TIVITY	UNITS PER ASSY
		MAJOR ASSEMBLY	CENTRE FUSELAGE ACCESS DOORS		
		PART NUMBER	1 2 3 4 5 6 7 NOMENCLATURE		
	32 -	41A-35069	DOOR INSTL - FUEL CENTRE TANK ACCESS PORT (SEE FIG. 19)		NP
		41A-35069-1	DOOR INSTL - FUEL CENTRE TANK ACCESS STBD		NP
		41A-35069-2	.DOOR ASSY - FUEL CENTRE TANK ACCESS LH (I)		1
		41A-35069-3	.DOOR ASSY - FUEL CENTRE TANK ACCESS RH (I)		1
	- 1	41A-35069-4	..DOOR - FUEL CENTRE TANK ACCESS LH		1
	- 2	41A-35069-5	..DOOR - FUEL CENTRE TANK ACCESS RH		1
	- 3	NAS1203-2	.BOLT		43
		41A-35140	DOOR INSTL - HYD TANK FILLER ACCESS (PORT) (SEE FIG. 19)		NP
		41A-35140-2	.DOOR ASSY - HYD TANK FILLER ACCESS (PORT) (INTERCHANGEABLE)		1
	- 4	41A-35140-4	..DOOR - HYD TANK FILLER ACCESS (PORT)		1
	- 5	41A-35140-6	..HALF HINGE - HYD TANK FILLER ACCESS DOOR		1
R	- 6	H5000-2-072-072	..LATCH ASSY - (V83014)		2
	- 7	41A-35140-8	.HALF HINGE - HYD TANK FILLER ACCESS DOOR		1
R	- 8	S1267-9-550	.PIN ASSY - (V88308)		1
R	- 9	S1440	.SPRING - (V88308)		2
	-10	NAS623-3-2	.SCREW		4
	-11	NAS623-3-8	.SCREW		1
		AN960-10L	.WASHER		5
		MS21042L3	.NUT		5
		41A-35103	DOOR INSTL - FLIGHT CONTROLS BREAK ACCESS (SEE FIG. 19)		NP
		41A-35103-4	.DOOR ASSY - FLIGHT CONTROLS BREAK ACCESS (INTERCHANGEABLE)		2
	-12	41A-35103-8	..HALF HINGE - FLIGHT CTLBREAK DOOR		1
R	-13	H5000-2-051-081	..LATCH ASSY - (V83014)		1
	-14	41A-35103-26	.HALF HINGE - FLIGHT CTL BREAK DOOR		2
R	-15	S1267-9-320	.PIN ASSY - (V88308)		2
	-16	NAS623-3-2	.SCREW		4
		AN960-10L	.WASHER		4
		MS21042L3	.NUT		4
		41A-35081	DOOR INSTL - FUS STA 236 TO REAR BULKHEAD ACCESS (SEE FIG. 19)		NP
	-17	41A-35081-2	.DOOR ASSY - FUS STA 236 TO REAR BULKHEAD ACCESS (REPLACEABLE)		1
R	-18	40S5-3	..STUD - (V71286)		19
R		R4G	..SNAP RING - (V71286)		19
R		4002H	..GROMMET - (V71286)		19
	-19	41A-35081-12	..HALF HINGE		1
	-20	41A-35081-14	.PIN - HINGE		1
	-21	41A-35081-16	.PIN - HINGE		1
	-22	41A-35074-12	.PLATE - HINGE PIN		1
	-23	NAS623-3-3	.SCREW		2
		AN960D10L	.WASHER		2
		MS21042L3	.NUT		2
	-24	41A-35081-34	.CHANNEL ASSY - (I)		1
	-25	41A-35081-20	.CHANNEL ASSY - (I)		1
		41A-35074	DOOR INSTL - FUS STA 235-257 ACCESS (SEE FIG. 19)		NP
	-26	41A-35074-2	.DOOR ASSY - FUS STA 235-257 ACCESS (I)		1
R	-27	40S5-3	..STUD - (V71286)		17
R		R4G	..SNAP RING - (V71286)		17
R		4002H	..GROMMET - (V71286)		17
	-28	41A-35074-8	..HALF HINGE		1
R	-29	S1267-9-670	.PIN - (V88308)		1
R	-30	S1267-9-690	.PIN - (V88308)		1
	-31	41A-35074-12	.PLATE - HINGE PIN		1
	-32	NAS623-3-3	.SCREW		2
		AN960D10L	.WASHER		2
		MS21042L3	.NUT		2

FIGURE AND INDEX NUMBER	GROUP	FUSELAGE	EFFEC-TIVITY	UNITS PER ASSY
	MAJOR ASSEMBLY	CENTRE FUSELAGE ACCESS DOORS		
	PART NUMBER	1 2 3 4 5 6 7 NOMENCLATURE		
32 -	41A-35106	DOOR INSTL - TANK WATER DRAIN ACCESS PORT (SEE FIG. 19)		NP
	41A-35106-1	DOOR INSTL - TANK WATER DRAIN ACCESS STBD		NP
	41A-35106-6	.DOOR ASSY - TANK WATER DRAIN ACCESS (I)		1
-33	41A-35106-8	..DOOR - TANK WATER DRAIN ACCESS		1
-34	H5000-2-051-081	..LATCH ASSY - (V83014)		1
-35	41A-35106-10	..HALF HINGE		1
-36	41A-35106-20	.HALF HINGE		1
-37	S1267-9-320	.PIN ASSY - (V88308)		1
-38	41A-35106-18	.PACKING - WATER DRAIN ACCESS DOOR HINGE		1
-39	NAS623-3-2	.SCREW		2
	AN960-10L	.WASHER		2
	MS21042L3	.NUT	001-050	2
-40	41A-35096-40	DOOR ASSY - COMPRESSOR BLADE (I) (SEE FIG. 19)		1
-41	40S5-3	.STUD - (V71286)		29
	R4G	.SNAP RING - (V71286)		29
	4002G	.GROMMET - (V71286)		29
	41A-35129-48	DOOR INSTL - ENGINE ACCESS (SEE FIG. 19)		NP
	41A-35129-16	.BEAM ASSY - DOOR HINGE CENTRE (I)		1
-42		DELETED		
-43		DELETED		
-44	NAS1201C6A78	..CHAIN		4
-45	NAS1334S6S18	..PIN		4
	41A-35129-26	.DOOR ASSY - ENGINE ACCESS LH (I)		1
-46	41A-35129-27	.DOOR ASSY - ENGINE ACCESS RH (I)		1
-47	41A-35129-12	..LOUVER - (VENT) (RIVETED)		2
-48	40S5-2	..STUD - (V71286)		6
-49	40S5-3	..STUD - (V71286)		11
-50	40S5-4	..STUD - (V71286)		3
	4002G	..GROMMET - (V71286)		20
	R4G	..SNAP RING - (V71286)		20
-51		DELETED		
-52		DELETED		
-53		DELETED		
-54	41A-35107	DOOR - FUS STA 268-278 UP PER ACCESS (SEE FIG. 20)		REF
-55	41A-35031-40	DOOR ASSY - FUEL FILLER ACCESS (SEE FIG. 24)		REF
-56	41A-35031-102	DOOR - FUEL VENT ACCESS (SEE FIG. 24)		REF
-57	41A-35031-106	DOOR - FUEL VENT ACCESS (SEE FIG. 24)		REF
-58	41A-35061-4	DOOR ASSY - (SEE FIG. 20)		REF
-59	41A-35031-36	DOOR - PRESSURE REGULATOR VALVE ACCESS (SEE FIG. 24)		REF
-60	41A-35031-128	DOOR - CANOPY LOCK MECHANISM ACCESS (SEE FIG. 24)		REF
-61	41A-35031-30	DOOR - CANOPY TORQUE SHAFT ACCESS (SEE FIG. 24)		REF
-62	41A-35081-34	CHANNEL ASSY - (DOOR LANDING PLATE) (SEE FIG. 19)		REF
	41A-35179	HINGE - ENGINE ACCESS DOOR INSTL		NP
-63	40S5-2	.STUD - (V71286)		16
	4002G	.GROMMET - (V71286)		16
	R4G	.SNAP RING - (V71286)		16
	214-16	.RECEPTACLE		16
R	MW4602003-1 *	JUMPER INSTL - BONDING (SEE SECTION 13)		REF
R -64	M83413/8-2BB6 *	.JUMPER ASSY		2
R	M23053/5-104-4 *	.SLEEVE		2
R -65	MS35207-263 *	.SCREW		4
R	AN960JD10L *	.WASHER		4
R	AN960-10L *	.WASHER		8
R	MS35338-43 *	.WASHER		4
R	MS21042-3 *	.NUT		4
R	*	IAW C-12-114-000/CD-033		

-000-

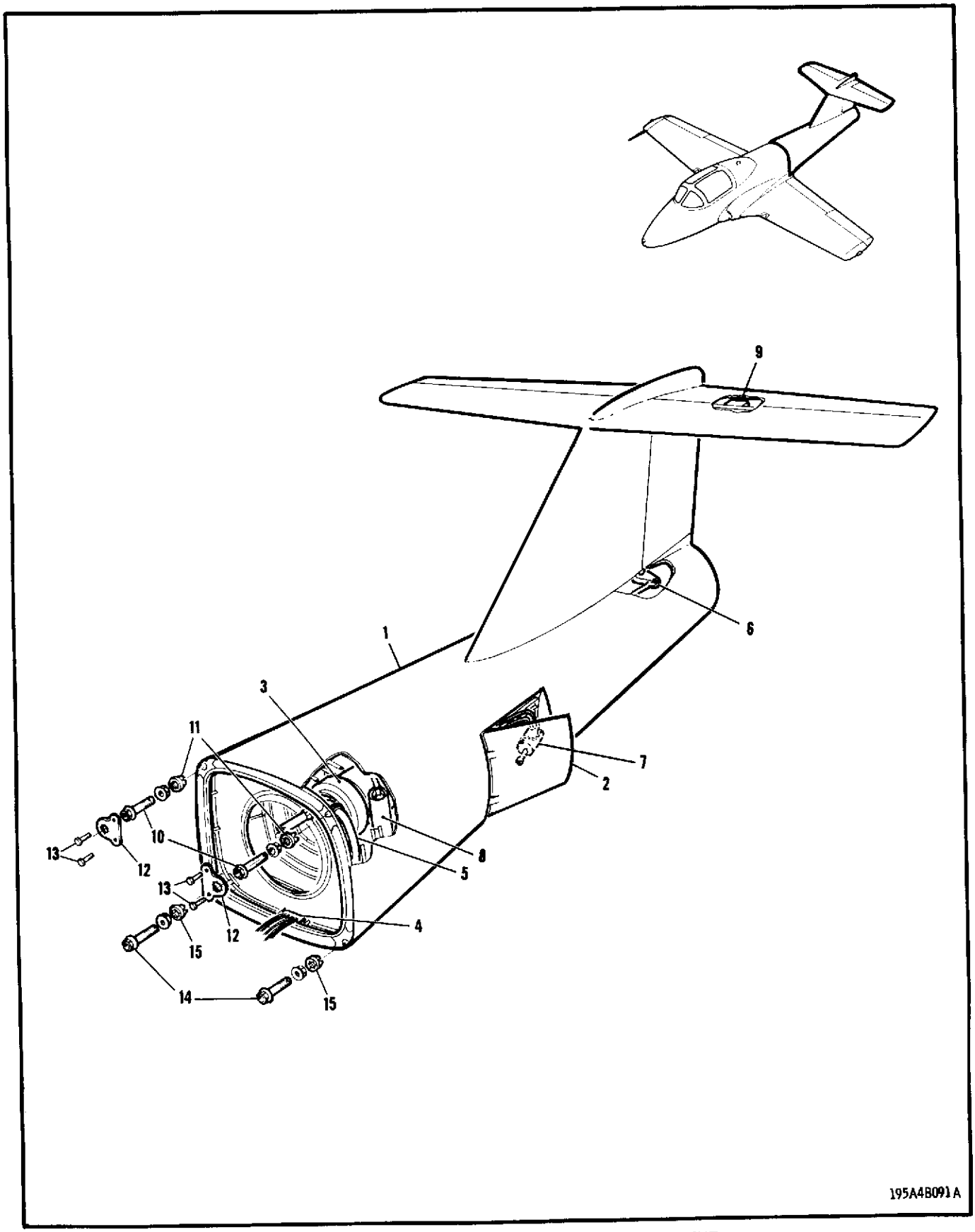

FIGURE 33 AFT FUSELAGE & JOINT ATTACHMENT

FIGURE AND INDEX NUMBER	GROUP	FUSELAGE	EFFEC-TIVITY	UNITS PER ASSY
	MAJOR ASSEMBLY	AFT FUSELAGE & JOINT ATTACHMENT		
	PART NUMBER	1 2 3 4 5 6 7 NOMENCLATURE		
33 -	41A-36001-800	FUSELAGE ASSY - AFT (INTERCHANGEABLE) (SEE FIG. 1) (FOR SPARES ORDER 41A-36001-802)		1
	41A-36001-802	FUSELAGE ASSY - AFT (SPARE FOR 41A-36001-800)		
- 1	41A-36002-802	.FUSELAGE STRUCTURE GENL ASSY - AFT (SEE FIG. 34)		REF
- 2	41A-36057	.SPEEDBRAKE INSTL - (SEE FIG. 35)		REF
- 3	41A-44000-2	.JET PIPE INSTL - POWER PLANT (SEE SECTION 5)		REF
- 4	41A-44001-4	.DRAIN INSTL - POWER PLANT (SEE SECTION 5)		REF
- 5	41A-65000-4	.VENT SYS INSTL - REAR FUS FUEL (SEE SECTION 6)		REF
- 6	41A-90005	.FLIGHT CONTROLS INSTL - AFT FUSELAGE (SEE SECTION 7)		REF
- 7	41A-42306	.HYDRAULIC SYS INSTL - AFT FUSELAGE (SEE SECTION 8)		REF
- 8	41A-99005	.JET PUMP INSTL - ZONE 2 COOLING (SEE SECTION 5)		REF
- 9	41A-42102	.ELECTRICAL EQUIP. INSTL - AFT FUS (SEE SECTION 12)		REF
	41A-36007	.JOINT INSTL - CENTRE TO AFT FUS STA 308		NP
-10	DAA629-46	..BOLT - (DUM) (CENTRE TO AFT FUSELAGE JOINT UPPER)		2
	41-30081-8	..WASHER - LONGERON FITTING (FWD UPPER LH)		1
	41-30081-10	..WASHER - LONGERON FITTING (FWD UPPER RH)		1
	41A-36058-6	..WASHER - FUS JOINT (AFT UPPER LH)		1
	41A-36058-8	..WASHER - FUS JOINT (AFT UPPER RH)		1
R	42FW918	..NUT - (V56878)		2
-11	41A-36060	..CAP - CENTRE TO AFT FUS JOINT LOCKING		2
		OR		
	41A-36060-2	..CAP - CENTRE TO AFT FUS JOINT LOCKING		
	MS24665-357	..COTTER PIN		2
-12	41A-35109	..PLATE - FUSELAGE STA 308 LOCK (UPPER)		2
-13	NAS1103-3	..BOLT		4
	AN960PD10L	..WASHER		4
	MS21042L3	..NUT		4
-14	DAA628-40	..BOLT - (DUM) (CENTRE TO REAR FUSELAGE JOINT LOWER)		2
	41-30081-12	..WASHER - LONGERON FITTING (FWD LOWER LH)		1
	41-30081-14	..WASHER - LONGERON FITTING (FWD LOWER RH)		1
	41A-36058-10	..WASHER - FUS JOINT (AFT LOWER LH)		1
	41A-36058-12	..WASHER - FUS JOINT (AFT LOWER RH)		1
R	42FW820	..NUT - (V56878)		2
-15	41A-36059	..CAP - CENTRE TO AFT FUS JOINT LOCKING		2
	MS24665-289	..COTTER PIN		2

-OOO-

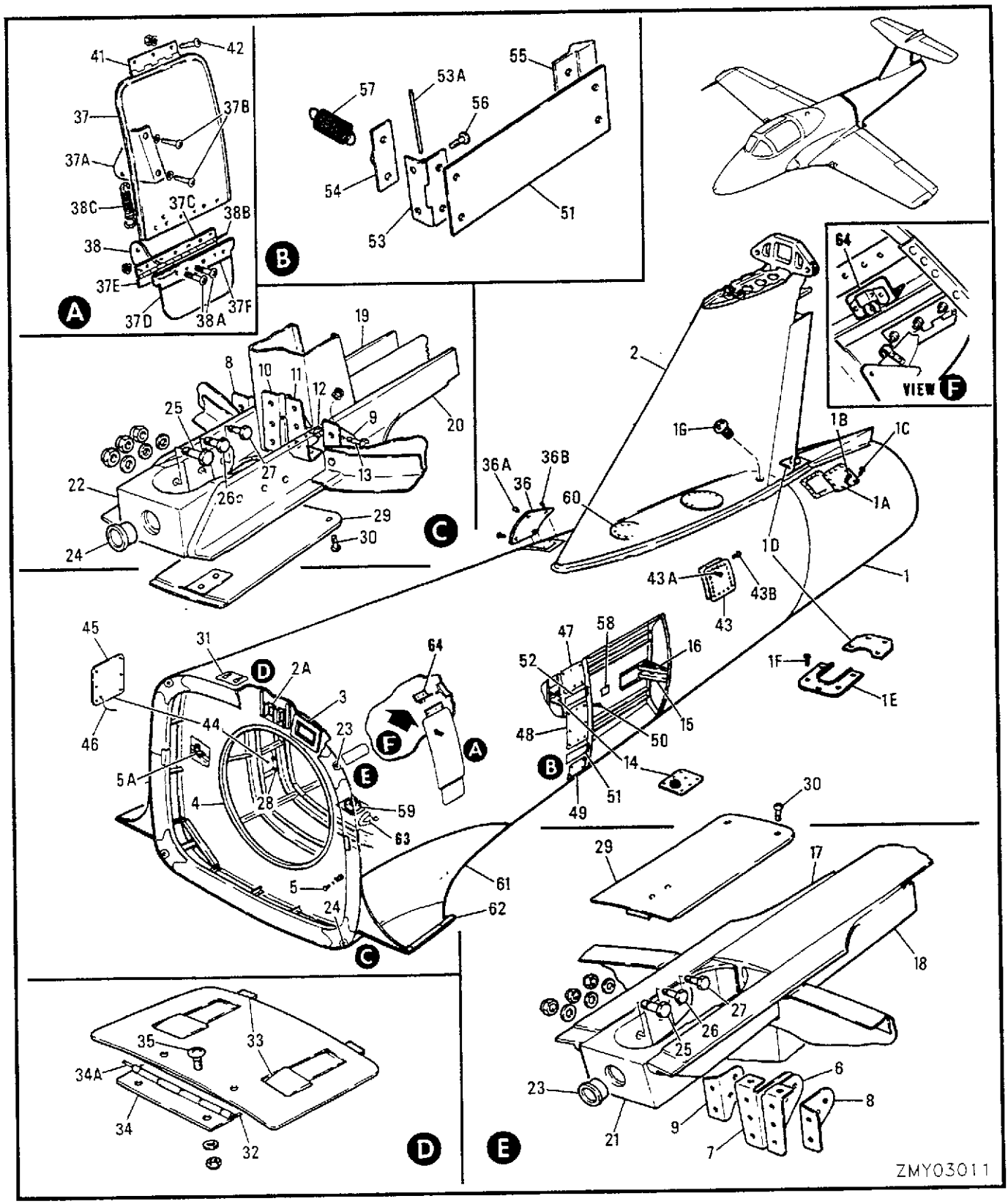

FIGURE 34 AFT FUSELAGE STRUCTURE

FIGURE AND INDEX NUMBER	GROUP	FUSELAGE	EFFEC-TIVITY	UNITS PER ASSY
	MAJOR ASSEMBLY	AFT FUSELAGE STRUCTURE		
	PART NUMBER	1 2 3 4 5 6 7 NOMENCLATURE		
34 -	41A-36002-802	FUSELAGE STRUCTURE GENL ASSY - AFT (I) (SEE FIG. 33)		1
	41A-36027	.FRAME INSTL - AFT FUS FIN TO AFT SPAR (SEE SECTION 12)		REF
	41A-42171	.BRACKET INSTL - FIRE DETECTOR WIRE CLIP (SEE SECTION 12)		REF
	41A-42173	.BRACKET INSTL - FIRE DETECTOR WIRE CLIP (SEE SECTION 12)		REF
- 1	41A-36065-800	.TAILCONE ASSY - AFT FUSELAGE (R)		1
	41A-36042	..HINGE INSTL - RUDDER (SEE SECTION 7)		REF
- 1A	41A-36065-14	..PANEL - ACCESS (INTERCHANGEABLE)		1
- 1B	MS35207-262	..SCREW		11
- 1C	S1256CN1032-14	..SCREW - (V88308)		1
	MS24665-132	..COTTER PIN		1
- 1D	41A-36065-68	..PLATE - COVER		1
- 1E	41A-36065-66	..PLATE - COVER		1
- 1F	MS35207-262	..SCREW		7
- 1G	NAS226-8	.SCREW - (PLUG)		1
- 2	41A-21000	.STABILIZER ASSY - VERTICAL (SEE SECTION 2)		REF
	41A-36011	.FRAME INSTL - FUSELAGE STA 314		NP
	41A-36011-2	..FRAME ASSY - FUSELAGE STA 314		1
- 2A	41A-36011-120	...RETAINER - (RIVETED)		1
R - 3	41A-36063/S	...SEAL ASSY - ZONE 2 GROUND COOLING SYS		1
	MS35206-245	...SCREW		26
	AN960-8L	...WASHER		26
	MS21042L08	...NUT		26
R - 4	CAP1826C	...SEAL ASSY - (V92798)		1
R	PB4395	...RIVET		64
	41A-36011-110	...ANGLE - (UPPER)		1
	41A-36011-108	...ANGLE - (LOWER)		1
- 5	MS27039-4-04	...SCREW - (TOOLING HOLE BLANKING)		8
	AN960C416L	...WASHER		8
	MS21043-4	...NUT		8
- 5A	AN743-13	...BRACKET - (HARNESS)		2
- 6	41A-36011-62	..CLIP - (UPPER)		2
- 7	41A-36011-63	..CLIP - (UPPER)		2
- 8	41A-36011-64	..CLIP		4
- 9	41A-36011-65	..CLIP		4
-10	41A-36011-60	..CLIP - (LOWER)		2
-11	41A-36011-61	..CLIP - (LOWER)		2
-12	NAS1103-3	..BOLT		8
-13	NAS1103-6	..BOLT		16
	AN960PD10	..WASHER		24
	MS21042L3	..NUT		24
	41A-36005	.WELL INSTL - AFT FUS SPEEDBRAKE PORT		NP
	41A-36005-801	.WELL INSTL - AFT FUS SPEEDBRAKE STBD		NP
	41A-36005-10	..DIAPHRAGM ASSY - SPEEDBRAKE WELL LH		1
	41A-36005-11	..DIAPHRAGM ASSY - SPEEDBRAKE WELL RH		1
-14	41A-36062	...BEARING ASSY - SPEEDBRAKE HINGE		1
	41A-36062-2	....PLATE - SPEEDBRAKE HINGE BEARING		1
	NAS77-5-25	....BUSHING		1
	41A-36038	..FITTING ASSY - JACK ATTACHMENT LOWER LH		1
	41A-36038-1	..FITTING ASSY - JACK ATTACHMENT LOWER RH		12
-15	41A-36038-2	...FITTING - JACK ATTACHMENT LOWER LH		1
	41A-36038-3	...FITTING - JACK ATTACHMENT LOWER RH		1
	NAS77-8-25	...BUSHING		1
	41A-36039	..FITTING ASSY - JACK ATTACHMENT UPPER LH		1
	41A-36039-1	..FITTING ASSY - JACK ATTACHMENT UPPER RH		1
-16	41A-36039-2	...FITTING - JACK ATTACHMENT UPPER LH		1
	41A-36039-3	...FITTING - JACK ATTACHMENT UPPER RH		1
	NAS77-8-25	...BUSHING		1

	FIGURE AND INDEX NUMBER	GROUP	FUSELAGE	EFFEC-TIVITY	UNITS PER ASSY
		MAJOR ASSEMBLY	AFT FUSELAGE STRUCTURE		
		PART NUMBER	1 2 3 4 5 6 7 NOMENCLATURE		
	34 -17	41A-36030	.ANGLE - FUSELAGE JOINT UPPER LONGERON INBOARD LH		1
		41A-36030-1	.ANGLE - FUSELAGE JOINT UPPER LONGERON INBOARD RH		1
	-18	41A-36031	.ANGLE - FUSELAGE JOINT UPPER LONGERON OUTBOARD LH		1
		41A-36031-1	.ANGLE - FUSELAGE JOINT UPPER LONGERON OUTBOARD RH		1
	-19	41A-36032	.ANGLE - FUSELAGE JOINT LOWER LONGERON INBOARD LH		1
		41A-36032-1	.ANGLE - FUSELAGE JOINT LOWER LONGERON INBOARD RH		1
	-20	41A-36033	.ANGLE - FUSELAGE JOINT LOWER LONGERON OUTBOARD LH		1
		41A-36033-1	.ANGLE - FUSELAGE JOINT LOWER LONGERON OUTBOARD RH		1
	-21	41A-36034	.FITTING - FUS STA 308 UPPER LONGERON LH		1
		41A-36034-1	.FITTING - FUS STA 308 UPPER LONGERON RH		1
	-22	41A-36035	.FITTING - FUS STA 308 LOWER LONGERON LH		1
		41A-36035-1	.FITTING - FUS STA 308 LOWER LONGERON RH		1
	-23	41-30079-12	.BUSHING - FUS STA 308 UPPER FITTING		2
	-24	41-30079-10	.BUSHING - FUS STA 308 LOWER FITTING		2
	-25	NAS464P5A9	.BOLT - (FITTING RETAINING)		8
		AN960C516	.WASHER		8
		MS21042L5	.NUT		8
	-26	NAS464P4A8	.BOLT		8
	-27	NAS464P4A7	.BOLT		8
		AN960C416	.WASHER		16
		MS21042L4	.NUT		16
R	-28	244-16D	.RECEPTACLE - (V71286)		6
		41A-36002-122	.COVER ASSY - JOINT ATT BOLT ACCESS (I)		4
	-29	41A-36002-134	..COVER - JOINT ATTACHMENT BOLT ACCESS		1
		41A-36002-136	..SPRING - JOINT ATT BOLT ACCESS COVER		1
	-30	MS27039-1-12	..SCREW		8
		41A-36056	.DOOR INSTL - ENGINE IGNITOR ACCESS		NP
		41A-36056-2	..DOOR ASSY - ENGINE IGNITOR ACCESS (I)		1
	-31	41A-36056-4	...DOOR - ENGINE IGNITOR ACCESS		1
		41A-36056-6	...PACKING - ENGINE IGNITOR DOOR HINGE		1
	-32	41A-36056-8	...HALF HINGE - ENGINE IGNITOR DOOR		1
R	-33	H5000-2-040-081	...LATCH ASSY - (V83014)		2
	-34	41A-36056-10	..HALF HINGE - ENGINE IGNITOR DOOR		1
	-34A	MS20253P2-225	..PIN		1
	-35	MS27039-1-08	..SCREW		2
		AN960-10L	..WASHER		2
		MS21042L3	..NUT		2
	-36	41A-36002-128	.DOOR - FLIGHT CONTROLS ACCESS (I)		1
	-36A	MS27039-1-08	.SCREW		17
R	-36B	S1256CN1032-14	.SCREW - (V88308)		1
		MS24665-134	.COTTER PIN		1
		41A-36002-804	.DOOR ASSY - FIRE EXTINGUISHER ACCESS		1
	-37	41A-36002-332	..DOOR - FIRE EXTINGUISHER UPPER		1
	-37A	41A-36002-320	..BRACKET ASSY		1
	-37B	NAS623-3-3	..SCREW		2
		AN960PD10L	..WASHER		2
	-37C	41A-36002-326	..HALF HINGE		1
	-37D	41A-36002-330	..DOOR - FIRE EXTINGUISHER LOWER		1
	-37E	41A-36002-328	..HALF HINGE		1
	-37F	NO NUMBER	..STRIP - REINFORCING		1
	-38	41A-36002-322	..BRACKET		1
	-38A	NAS623-3-3	..SCREW		2
		AN960PD10L	..WASHER		2
		MS21042L3	..NUT		2

	FIGURE AND INDEX NUMBER	GROUP		FUSELAGE	EFFEC-TIVITY	UNITS PER ASSY
		MAJOR ASSEMBLY		AFT FUSELAGE STRUCTURE		
		PART NUMBER		1 2 3 4 5 6 7 NOMENCLATURE		
	34 -38B	MS20253P2-500		..PIN - (DOOR HINGE)		1
	-38C	41A-36002-324		..SPRING		1
	-39			DELETED		
	-40			DELETED		
	-41	41A-36002-310		..HINGE		1
	-42	NAS623-3-2		.SCREW		3
		AN960PD10		.WASHER		3
		MS21042L3		.NUT		3
	-43	41A-36002-126		.DOOR - RUDDER CONTROL ACCESS (I)		1
	-43A	MS27039-1-08		.SCREW		15
R	-43B	S1256CN1032-14		.SCREW - (V88308)		1
		MS24665-134		.COTTER PIN		1
		41A-36002-194		.DOOR ASSY - JET PIPE ACCESS (I)		1
	-44	41A-36002-130		..DOOR - JET PIPE ACCESS		1
R		4002G		..GROMMET - (V71286)		6
R		R4G		..SNAP RING - (V71286)		6
R	-45	40S5-2		..STUD - (V71286)		6
R		S1191		..CLIP - (V88308)		1
	-46	NAS1201C6B5		.CHAIN		1
		41A-36055		.DOOR INSTL - SPEEDBRAKE ACCESS		NP
	-47	41A-36055-18		..DOOR - SPEEDBRAKE ACCESS LH (I)		1
		41A-36055-19		..DOOR - SPEEDBRAKE ACCESS RH (I)		1
	-48	41A-36055-16		..DOOR - SPEEDBRAKE ACCESS LH (I)		1
		41A-36055-17		..DOOR - SPEEDBRAKE ACCESS RH (I)		1
	-49	41A-36055-14		..DOOR - SPEEDBRAKE ACCESS LH (I)		1
		41A-36055-15		..DOOR - SPEEDBRAKE ACCESS RH (I)		1
	-50	MS27039-1-07		..SCREW		36
		41A-36055-20		..DOOR ASSY - SPEEDBRAKE LOWER HINGE (I)		2
		41A-36055-34		..DOOR ASSY - SPEEDBRAKE UPPER HINGE (I)		2
	-51	41A-36055-22		...DOOR - SPEEDBRAKE LOWER HINGE		1
	-52	41A-36055-36		...DOOR - SPEEDBRAKE UPPER HINGE		1
	-53	41A-36055-24		...HINGE		1
	-53A	MS20253P2-155		...PIN		1
	-54	41A-36055-26		...ANGLE		1
	-55	41A-36055-28		...STRIP - RUBBING		1
	-56	NAS623-3-2		..SCREW		8
	-57	41-31043		..SPRING - EXTENSION		4
R	-58	S1043		.NAMEPLATE - (V88308)		1
		41A-61315-12		.DRAIN INSTL - BOTTOM JET PIPE FUEL		NP
		41A-61315-2		..PLATE - JET PIPE DRAIN		1
	-59	41-61014-2		..FITTING - JET PIPE DRAIN END		1
	-60	41A-36002-132		.PLATE - COVER (RIVETED)		1
		41A-36006-38		.FAIRING INSTL - WING TO FUSELAGE PORT		NP
		41A-36006-1		.FAIRING INSTL - WING TO FUSELAGE STBD		NP
	-61	41A-36006-32		..FAIRING ASSY - WING TO FUSELAGE PORT		1
	-62	41A-36061-18		...PLATE - CABLE PROTECTING PORT		1
		41A-36006-27		..FAIRING ASSY - WING TO FUSELAGE STBD		1
	-63	41A-35156-12	*	.SCOOP - AFT FUSELAGE DRAIN		23
		NO NUMBER	**	.BRACKET - FRICTION CATCH SUPPORT		1
		MS35206-228	**	.SCREW		2
	-64	M9700	**	.CATCH - FRICTION		1
		MS35206-226	**	.SCREW		2
		MS21042L06	**	.NUT		2
				-OOO-		
			*	IAW C-12-114-000/CF-246		
			**	IAW C-12-114-000/CF-339		

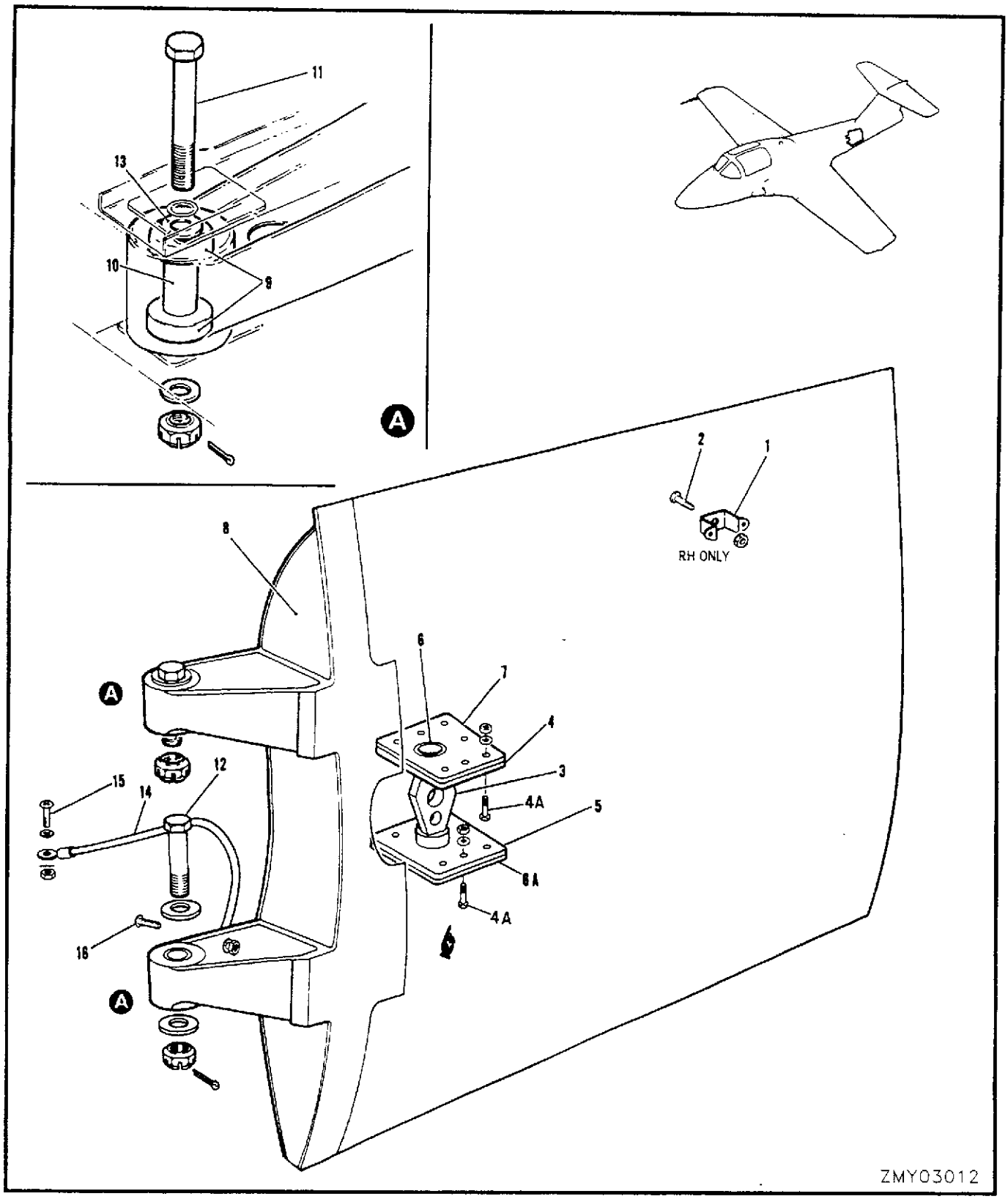

FIGURE 35 AFT FUSELAGE SPEED BRAKES

FIGURE AND INDEX NUMBER	GROUP	FUSELAGE	EFFEC-TIVITY	UNITS PER ASSY
	MAJOR ASSEMBLY	AFT FUSELAGE SPEED BRAKES		
	PART NUMBER	1 2 3 4 5 6 7 NOMENCLATURE		
35 -	41A-36057	SPEEDBRAKE INSTL - PORT (SEE FIG. 33)		NP
	41A-36057-1	SPEEDBRAKE INSTL - STBD		NP
	41A-36004	.SPEEDBRAKE ASSY - LH (INTERCHANGEABLE)		1
	41A-36004-1	.SPEEDBRAKE ASSY - RH (INTERCHANGEABLE)		1
	41A-36004-66	..BRACKET ASSY - SPEEDBRAKE (RH)		1
- 1	41A-36004-68	...BRACKET - SPEEDBRAKE (RH)		1
- 2	NAS428-3-5	...BOLT - (RH)		1
	AN345-10	...NUT - (RH)		1
- 3	41A-36052	..TRUNNION - SPEEDBRAKE		1
R	41A-36053-6	..HOUSING ASSY - SPEEDBRAKE BEARING LH		1
R	41A-36053-7	..HOUSING ASSY - SPEEDBRAKE BEARING RH		1
- 4	41A-36053-2	...HOUSING - SPEEDBRAKE BEARING LH		1
	41A-36053-3	...HOUSING - SPEEDBRAKE BEARING RH		1
	NAS75-8-009	...BUSHING		1
R	41A-36054-6	..HOUSING ASSY - SPEEDBRAKE BEARING LH		1
R	41A-36054-7	..HOUSING ASSY - SPEEDBRAKE BEARING RH		1
-4A	NAS6203-4	..BOLT		14
	AN960PD10	..WASHER		14
	MS21042L3	..NUT		14
- 5	41A-36054-2	...HOUSING - SPEEDBRAKE BEARING LH		1
	41A-36054-3	...HOUSING - SPEEDBRAKE BEARING RH		1
- 6	NAS75-8-009	...BUSHING		1
- 6A	41A-36004-62	..SHIM		1
- 7	41A-36004-64	..SHIM		1
- 8	41A-36051	..FITTING - SPEEDBRAKE DOOR LH		1
	41A-36051-1	..FITTING - SPEEDBRAKE DOOR RH		1
- 9	MS27641-5	..BEARING		4
-10	NAS75-5-031	..BUSHING		2
-11	NAS6205-36D	.BOLT		1
	AN960PD516	.WASHER		1
	AN320-5	.NUT		1
	MS24665-134	.COTTER PIN		1
-12	NAS6205-38D	.BOLT		1
-13	S1236-516L	.WASHER - (V88308) (SHIM)		2
	S1236-516	.WASHER - (V88308) (SHIM)		9
	AN960PD516	.WASHER		1
	AN320-5	.NUT		1
	MS24665-134	.COTTER PIN		1
-14	MS25083-2BB6	.JUMPER ASSY		1
-15	NAS623-2-2	.SCREW		1
	AN960PD8L	.WASHER		1
	NAS680A3	.NUT		1
-16	NAS623-2-4	.SCREW		1
	AN960PD8L	.WASHER		1
	MS21042L08	.NUT		1
		OR		
	NAS680A3	.NUT		

-OOO-

FIGURE 36 DELETED

SECTION 4

LANDING GEAR

TABLE OF CONTENTS

FIGURE	TITLE	PAGE
37	LANDING GEARS	4-02
38	COMPLETE LANDING GEAR	4-04
39	NOSE LANDING GEAR SHOCK & DRAG STRUTS	4-08
40	NOSE WHEEL STEERING	4-12
41	NOSE LANDING GEAR DOOR OPERATING MECHANISM	4-14
42	NOSE LANDING GEAR DOOR	4-16
43	MAIN LANDING GEAR SHOCK STRUT	4-18
44	MAIN LANDING GEAR SIDESTAY & UPLOCK	4-22
45	MAIN LANDING GEAR DOOR OPERATING MECHANISM	4-26
46	MAIN LANDING GEAR DOOR	4-30
47	MAIN LANDING GEAR LEG DOOR & LATCH MECHANISM	4-32

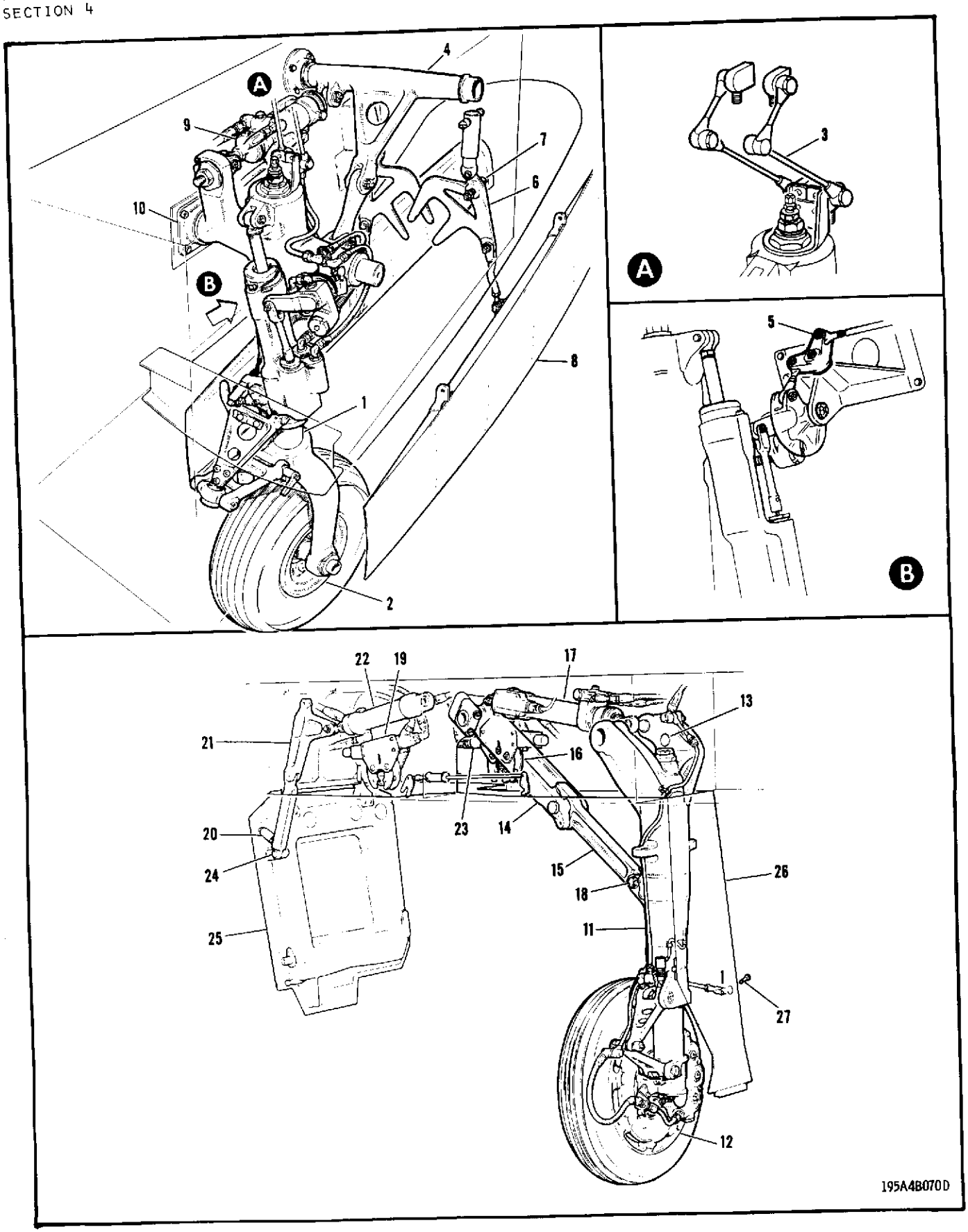

FIGURE 37 LANDING GEARS

FIGURE AND INDEX NUMBER	GROUP	LANDING GEAR	EFFEC-TIVITY	UNITS PER ASSY
	MAJOR ASSEMBLY	LANDING GEARS		
	PART NUMBER	1 2 3 4 5 6 7 NOMENCLATURE		
37 - 1	6500-7	STRUT ASSY - NOSE GEAR SHOCK (SEE FIG. 39)		REF
- 2	9533247	WHEEL ASSY - NOSE LDG/GR (SEE FIG. 39)		REF
- 3	3295000-4	SWIVEL ASSY - NOSE GEAR (SEE FIG. 39)		REF
- 4	41A-85006	STRUT ASSY - NOSE GEAR DRAG (SEE FIG. 39)		REF
- 5	41A-90372	LEVER ASSY - NOSE WHEEL STEERING (SEE FIG. 40)		REF
- 6	41A-85022	LEVER ASSY - CLAW (SEE FIG. 41)		REF
- 7	41A-85028	BOLT - N/GR DOOR MECH (SEE FIG. 41)		REF
- 8	41A-35125-800	DOOR ASSY - NOSE LDG/GRLH (SEE FIG. 42)		REF
- 9	3291000-7	ACTUATOR ASSY - NOSE LDG/GR (SEE SECTION 8)		REF
-10	LHSSR18A	BEARING ASSY - NOSE GEAR (SEE FIG. 38)		REF
-11	3288000-5A	STRUT ASSY - MAIN LANDING GEAR SHOCK (LH) (SEE FIG. 43)		REF
R -12	5006305	WHEEL ASSY - MAIN LDG/GR (SEE FIG. 43)		REF
-13	41-87070-2	PIN - MAIN GEAR PIVOT (SEE FIG. 38)		REF
-14	41A-87532	SIDESTAY ASSY - MLG UPPER (SEE FIG. 44)		REF
-15	41A-87531-16	SIDESTAY ASSY - MLG LOWER (SEE FIG. 44)		REF
-16	41A-87508-808	UPLOCK ASSY - MAIN GEAR (LH) (SEE FIG. 44)		REF
-17	3290000	ACTUATOR ASSY - MAIN GEAR (SEE SECTION 8)		REF
-18	NAS1110-27D	BOLT - (SEE FIG. 38)		REF
-19	41A-87520-804	UPLOCK ASSY - MAIN GEAR DOOR (SEE FIG. 45)		REF
-20	41A-87556-4	HALF SPRING BOX - LDG/GR (SEE FIG. 45)		REF
-21	41A-87552	LEVER ASSY - MAIN GEAR DOOR (SEE FIG. 45)		REF
-22	3289000-1	ACTUATOR ASSY - M/LDG/GR DOOR(SEE SECTION 8)		REF
-23	100994-1	ACTUATOR ASSY - MAIN LANDING GEAR UPLOCK (SEE SECTION 8)		REF
-24	41A-87500-40	PIN - DOOR LINK TO WHEEL DOOR (SEE FIG. 38)		REF
-25	41A-10500	DOOR ASSY - MAIN LANDING GEAR (SEE FIG. 46)		REF
-26	41A-10550-802	DOOR ASSY - MAIN LDG/GR LEG (SEE FIG. 47)		REF
-27	MS20392-2C17	PIN - (LINK TO LEG DOOR) (SEE FIG. 38)		REF

-OOO-

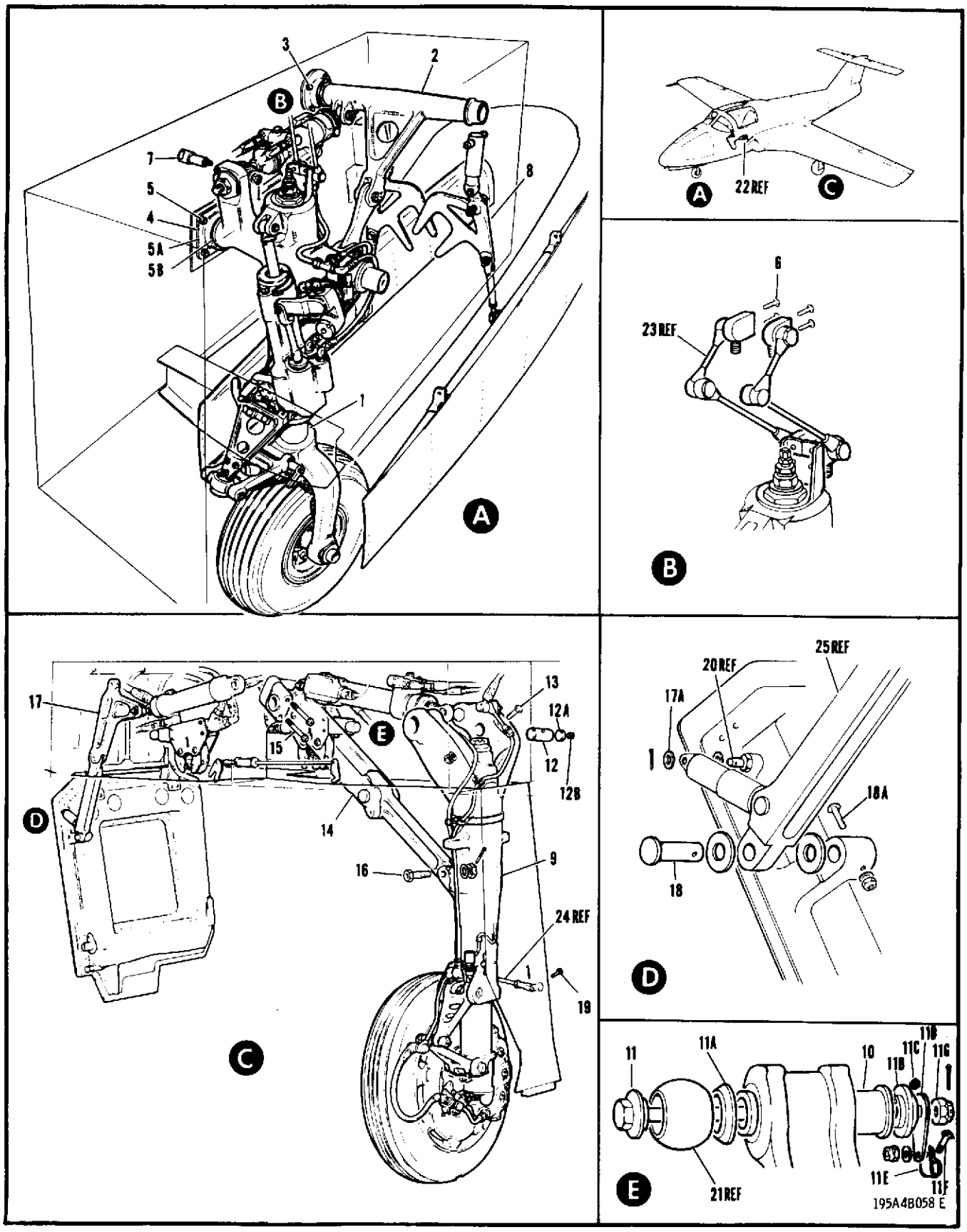

FIGURE 38 COMPLETE LANDING GEAR

FIGURE AND INDEX NUMBER	GROUP	LANDING GEAR	EFFEC-TIVITY	UNITS PER ASSY
	MAJOR ASSEMBLY	COMPLETE LANDING GEAR		
	PART NUMBER	1 2 3 4 5 6 7 NOMENCLATURE		
38 -	41A-87500	LANDING GEAR INSTL - (MAIN & NOSE) (SEE FIG. 1)		NP
	41A-85000	.LANDING GEAR INSTL - NOSE		NP
- 1	41A-85021-82	..SHOCK STRUT ASSY - NOSE LANDING GEAR (SEE FIG. 39)		REF
- 2	41A-85006	..DRAG STRUT ASSY - NOSE LANDING GEAR (SEE FIG. 39)		REF
- 3	NAS624H7	..BOLT - (DRAG STRUT TO STRUCTURE)		8
- 4	LHSSR18A	..BEARING ASSY - (V73134) (NOSE GEAR) (AS PER 41A-85001-6)		2
- 5	MS20005H7	..BOLT		8
- 5A	41A-85036	..SHIM - NOSE GEAR LAMINATED		AR
- 5B	41-85077	..WASHER - NOSE GEAR		2
- 6	AN501A10-7	..SCREW - (SWIVEL TO STRUCTURE)		4
- 7	41A-85018	..BOLT		1
	MS20002C8	..WASHER		1
	AN320-8	..NUT		1
	MS24665-289	..COTTER PIN		1
- 8	41A-85023	..DOOR MECH INSTL - NOSE LANDING GEAR (SEE FIG. 41)		REF
- 9	41A-87503	.SHOCK STRUT ASSY - MAIN LANDING GEAR (LH) (SEE FIG. 43)		REF
-10	41A-87566	.PIN - MLG PIVOT (FWD) OR		2
	41-87069	.PIN		
-11	41A-87567	.BOLT - MAIN LANDING GEAR SPECIAL		2
-11A	41A-87500-43	.WASHER - MLG PIVOT PIN		2
	41-87072	.WASHER ASSY - MLG GUIDE		2
-11B	41-87072-2	..WASHER		1
-11C	AN565F428H3	..SET SCREW		1
-11D	41A-87500-45	.PLATE - WEIGHT SWITCH HARNESS		2
-11E	MS21919WDG4	.CLAMP		2
-11F	MS35207-261	.SCREW		2
	AN960-816L	.WASHER		2
	MS21042L3	.NUT		2
-11G	AN310-8	.NUT		2
	MS24665-287	.COTTER PIN		2
	41-87070	.PIN ASSY - MLG PIVOT (AFT)		2
-12	41-87070-2	..PIN - MLG PIVOT		1
	41-87073	..PLUG ASSY - MLG		1
-12A	41-87073-2	...PLUG -		1
-12B	AN565F428H3	...SET SCREW		1
R -13	NAS6204-44	.BOLT		2
	41A-87564	.SPACER - MAIN LANDING GEAR		2
	AN960PD416	.WASHER		2
	MS21042L4	.NUT		2
-14	41A-87506-818	.SIDESTAY ASSY - MLG (LH) (SEE FIG. 44)		REF
-15	NAS625H32	.BOLT - (SIDESTAY TO CROSS BEAM)		8
-16	NAS1110-27D	.BOLT - (SIDESTAY TO MAIN GEAR)		2
	MS20002C10	.WASHER - (UNDER HEAD)		2
	MS20002-10	.WASHER		2
	AN320-10	.NUT		2
	MS24665-357	.COTTER PIN		2
-17	41A-87509	.OPERATING MECHANISM INSTL - MLG DOOR (SEE FIG. 45)		REF
-17A	AN960-416L	.WASHER - (SPRING BOX TO WHEEL DOOR)		4
	MS24665-136	.COTTER PIN		2
-18	41A-87500-40	.PIN - (DOOR LINK TO WHEEL DOOR)		2
	AN960-816L	.WASHER		4

FIGURE AND INDEX NUMBER	GROUP	LANDING GEAR	EFFEC-TIVITY	UNITS PER ASSY
	MAJOR ASSEMBLY	COMPLETE LANDING GEAR		
	PART NUMBER	1 2 3 4 5 6 7 NOMENCLATURE		
R 38 -18A	MS51957-51	.SCREW - (PIN LOCKING)		2
	AN960-8	.WASHER		2
	MS21042L08	.NUT		2
-19	MS20392-2C17	.PIN - (LINK TO LEG DOOR)		2
	AN960-10	.WASHER		2
	MS24665-134	.COTTER PIN		2
-20	41A-10512	PIVOT - SPRING (SEE FIG. 46)		REF
-21	AM1655	BEARING ASSY - M/LDG/GR (SEE SECTION 1)		REF
-22	41A-90020	VALVE CONTOL INSTL - LDG/GR EMERGENCY (SEE SECTION 8)		REF
-23	3295000-3	SWIVEL ASSY - (SEE FIG. 39)		REF
-24	41-87078	LINK ASSY - (SEE FIG. 43)		REF
-25	41A-87551	LEVER ASSY - (SEE FIG. 45)		REF

-OOO-

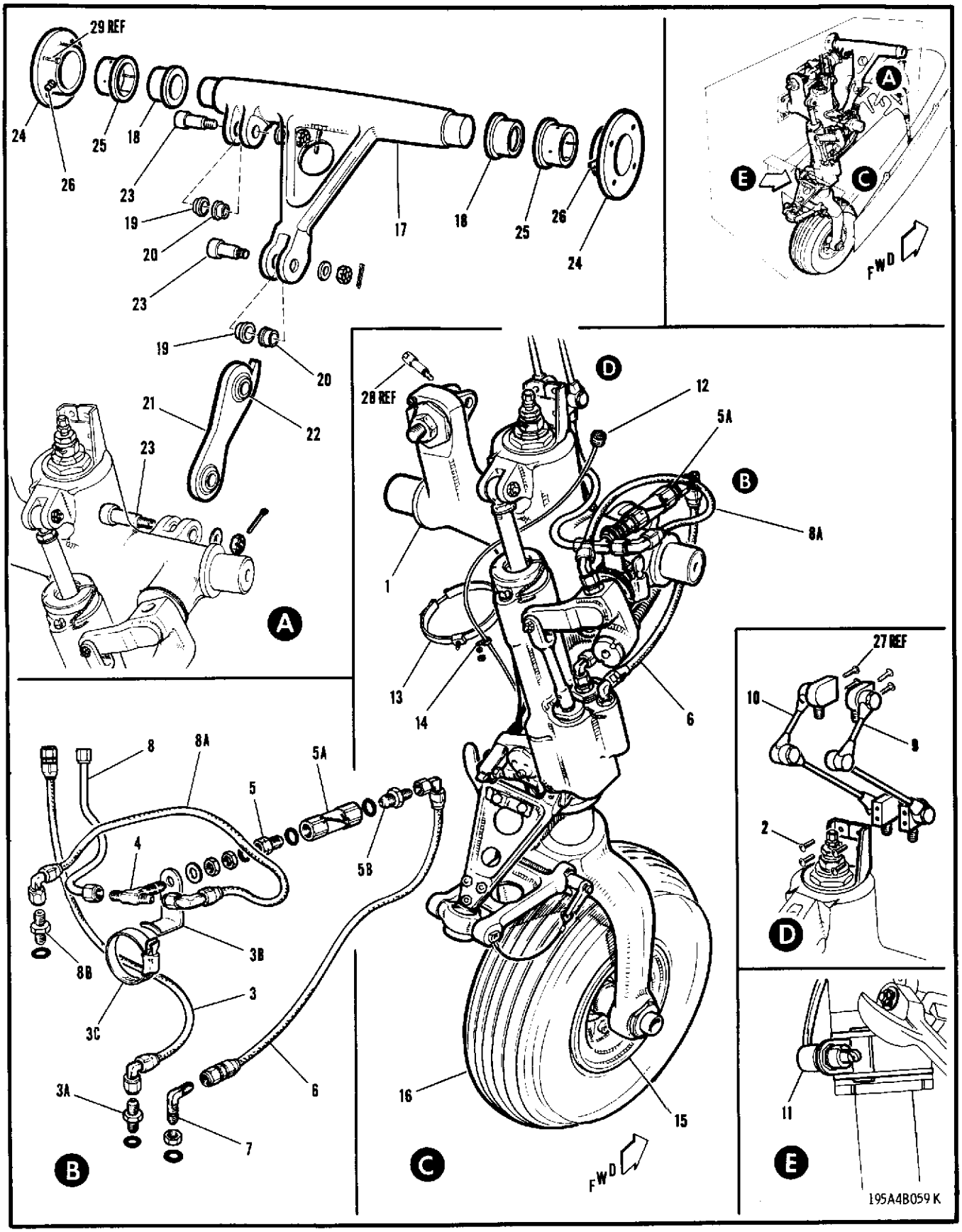

FIGURE 39 NOSE LANDING GEAR SHOCK & DRAG STRUTS

FIGURE AND INDEX NUMBER	GROUP	LANDING GEAR	EFFEC-TIVITY	UNITS PER ASSY
	MAJOR ASSEMBLY	NOSE LANDING GEAR SHOCK & DRAG STRUTS		
	PART NUMBER	1 2 3 4 5 6 7 NOMENCLATURE		
39 -	41A-85021-82	SHOCK STRUT ASSY - NOSE GEAR (MODIFIED) (SEE FIG. 38)		NP
	41A-85021-80	.SHOCK STRUT ASSY - NOSE GEAR		1
- 1	6500-17	..SHOCK STRUT ASSY - (JAR) (IAW 41A-85005-14) FOR BRKDN SEE C-13-288-000/MS-000		1
- 2	AN501A10-7	..SCREW		4
- 3	AE1002406E0145	..HOSE ASSY - (V69705)		1
	MS28777-4	..RING		1
	MS28778-4	..PACKING		1
	AN6289D4	..NUT		1
- 3A	MS21902D4	..UNION		1
	MS28778-4	..PACKING		1
- 3B	41A-85029-6	..BRACKET - NOSE GEAR		1
- 3C	AN737TW58	..CLAMP		1
- 4	MS21909-4	..TEE		1
	AN960D716	..WASHER		1
	AN924-4D	..NUT		1
	MS28778-4	..PACKING		1
- 5	AN893-2	..REDUCER		1
	41A-85021-50	..NUT		2
	MS28778-4	..PACKING		1
- 5A	2R2065-6	..RESTRICTOR - (V26044)		1
	MS28778-6	..PACKING		2
- 5B	MS21916-6-4	..REDUCER		1
- 6	AE1002406E0150	..HOSE ASSY - (V69705)		1
- 7	MS21926-4	..ELBOW		1
	MS28777-4	..RING		1
	MS28778-4	..PACKING		1
	AN6289D4	..NUT		1
- 8	41A-42327-40	..LINE ASSY - NOSE WHEEL STEERING PRESSURE		1
- 8A	AE1826E0115-090	..HOSE ASSY - (V69705)		1
	AN960-716	..WASHER		1
- 8B	MS21902-4	..UNION		1
	MS28778-4	..PACKING		1
R - 9	3295000-3	..SWIVEL ASSY - (V35962) (NOSE GEAR RH) (IAW 41A-85004-2)		1
R -10	3295000-4	..SWIVEL ASSY - (V69705) (NOSE GEAR LH) (IAW 41A-85004-3)		1
	MS28775-012	...PACKING		6
	30641-012	...SEAL		6
	41A-85021-29	..HARNESS ASSY - NOSE GEAR SHOCK STRUT		1
-11	21EN9-6	...SWITCH ASSY - (MSC)		1
-12	PT06SE12-10P	...PLUG - (V07213)		1
-13	901-275-1-5ASH	..CLAMP - (V75289)		1
-14	MS21919WDG4	..CLAMP		1
	AN960-10L	..WASHER		1
	MS21042L3	..NUT		1
-15	9533247	.WHEEL ASSY - (V11066) (NOSE LANDING GEAR) (IAW 41A-85002-2) FOR BRKDN SEE C-13-171-000/MS-000		1
-16	NO NUMBER	.TIRE - TUBE TYPE (2620-21-845-7820)		1
	NO NUMBER	.INNER TUBE (2620-00-288-0246)		1

FIGURE AND INDEX NUMBER	GROUP	LANDING GEAR	EFFEC-TIVITY	UNITS PER ASSY
	MAJOR ASSEMBLY	NOSE LANDING GEAR SHOCK & DRAG STRUTS		
	PART NUMBER	1 2 3 4 5 6 7 NOMENCLATURE		
39 -	41A-85006	DRAG STRUT ASSY - NOSE GEAR (MODIFIED) (SEE FIG. 38)		1
	41A-85010	.LEVER ASSY - NOSE LANDING GEAR (FOR SPARES ORDER 41A-85010-800) OR 41A-85010-802)		1
	41A-85010-800	.LEVER ASSY - (SPARE FOR 41A-85010) OR		
	41A-85010-802	.LEVER ASSY - (SPARE FOR 41A-85010)		
-17	41A-85010-2	..LEVER - NOSE LANDING GEAR		1
-18	41A-85013	..BUSHING - NOSE LANDING GEAR		2
-19	41A-85009	..BUSHING - NOSE LANDING GEAR	001-010	2
	41A-85009-2	..BUSHING - NOSE LANDING GEAR	011-	2
-20	41A-85012	..BUSHING - NOSE LANDING GEAR	001-010	2
	41A-85012-2	..BUSHING - NOSE LANDING GEAR	011-	2
	41A-85020-14	.LEVER ASSY - NOSE GEAR (FOR SPARES ORDER 41A-85020-18)		1
-21	41A-85020-2	..LEVER - NOSE GEAR		1
R -22	LHSSR-8	..BEARING - (V73134)		2
-23	41A-85018	.BOLT		3
	MS20002C8	.WASHER		3
	AN320-8	.NUT		3
	MS24665-283	.COTTER PIN		3
	41A-85016	.BRACKET ASSY - NOSE GEAR (DRAG STRUT)		2
-24	41A-85016-2	..BRACKET - NOSE GEAR (DRAG STRUT)		1
-25	41A-85014	..BUSHING - NOSE LANDING GEAR		1
-26	MS15001-1	..FITTING		1
-27	AN501A10-7	SCREW - (SEE FIG. 38)		REF
-28	41A-85018	BOLT - (SEE FIG. 38)		REF
-29	NAS624H7	BOLT - (SEE FIG. 38)		REF

-000-

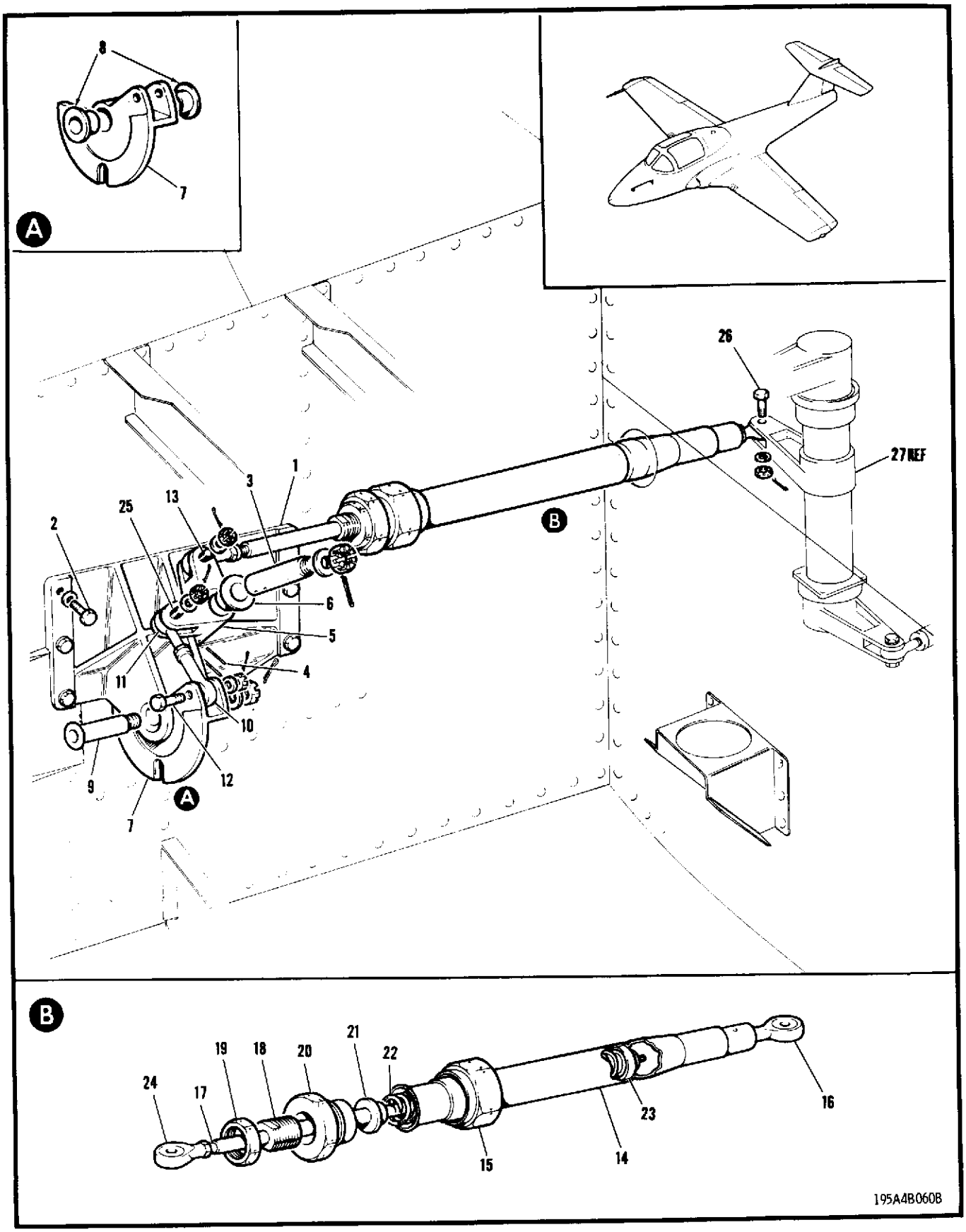

FIGURE 40 NOSE WHEEL STEERING

FIGURE AND INDEX NUMBER	GROUP LANDING GEAR / MAJOR ASSEMBLY / PART NUMBER	1 2 3 4 5 6 7 NOMENCLATURE	EFFEC-TIVITY	UNITS PER ASSY
40 -	41A-90370	STEERING INSTL - NOSE WHEEL (SEE SECTION 3)		NP
- 1	41A-90373-2	.MOUNTING - NOSE WHEEL STEERING LEVER		1
- 2	AN3-7A	.BOLT		6
	AN960PD10	.WASHER		6
- 3	41A-90379	.STUD - NOSE WHEEL STEERING		1
- 4	NAS561P3-18	.PIN		2
	41A-90372	.LEVER ASSY - NOSE WHEEL STEERING		1
- 5	41A-90372-2	..LEVER - NOSE WHEEL STEERING		1
- 6	FF600-5	..BUSHING - (V70417) (NOSE STEERING LEVER)		2
	AN960PD616	.WASHER		1
	AN320-6	.NUT		1
	MS24665-285	.COTTER PIN		1
	41A-90371	.PLATE ASSY - NOSE WHEEL STEERING CAM		1
- 7	41A-90371-2	..PLATE - NOSE WHEEL STEERING CAM		1
- 8	FF600-5	..BUSHING - (V70417) (NOSE STEERING CAM PLATE)		2
- 9	41A-90380	.BOLT - NOSE WHEEL STEERING SPECIAL		1
	AN960PD616	.WASHER		1
	AN320-6	.NUT		1
	MS24665-132	.COTTER PIN		1
-10	F34-14	.ROD END - (V73134)		1
-11	M34-14	.ROD END - (V73134)		1
	AN316-4R	.NUT		1
-12	NAS1103-12D	.BOLT		1
-13	NAS1103-14D	.BOLT		1
	AN960PD10	.WASHER		2
	AN320-3	.NUT		2
	MS24665-132	.COTTER PIN		2
	41A-90378-800	.BUNGEE ASSY - NOSE WHEEL STEERING	001-089	1
	41A-90378-850	.BUNGEE ASSY - NOSE WHEEL STEERING	090-	1
-14	41A-90378-38	..TUBE - NOSE WHEEL STEERING BUNGEE		1
	MS20819-16	..SLEEVE		1
-15	41A-90378-16	..NUT		1
R -16	MS21152-1	..ROD END		1
	MS24692-153	..PIN		2
-17	41A-90375	..ROD - NOSE WHEEL STEERING		1
	41A-90378-4	..SPACER		1
	NAS561P2-7	..PIN		2
-18	41A-90377	..SLEEVE - NOSE WHEEL STEERING ADJUSTING		1
-19	41A-90378-20	..NUT		1
-20	41A-90374	..NUT - NOSE WHEEL STEERING RETAINING		1
-21	41A-90376-6	..END CAP - NOSE WHEEL STEERING		1
	S1242-7	..WASHER - (V88308)		2
-22	41A-90364	..SPRING - COMPRESSION		1
-23	41A-90376-2	..END CAP - NOSE WHEEL STEERING		1
	AN960XD416	..WASHER		1
	AN320-4	..NUT		1
	S1242-7	..WASHER - (V88308)		2
	MS24665-134	..COTTER PIN		1
	NAS509-4	..NUT		1
-24	F34-14	..ROD END - (V73134)		1
-25	NAS1103-14D	.BOLT		1
-26	NAS1103-12D	.BOLT		1
	AN960PD10	.WASHER		2
	AN320-3	.NUT		2
	MS24665-132	.COTTER PIN		2
-27	41A-90233-2	LEVER - NOSE WHEEL STEERING (SEE SECTION 7)		REF

-OOO-

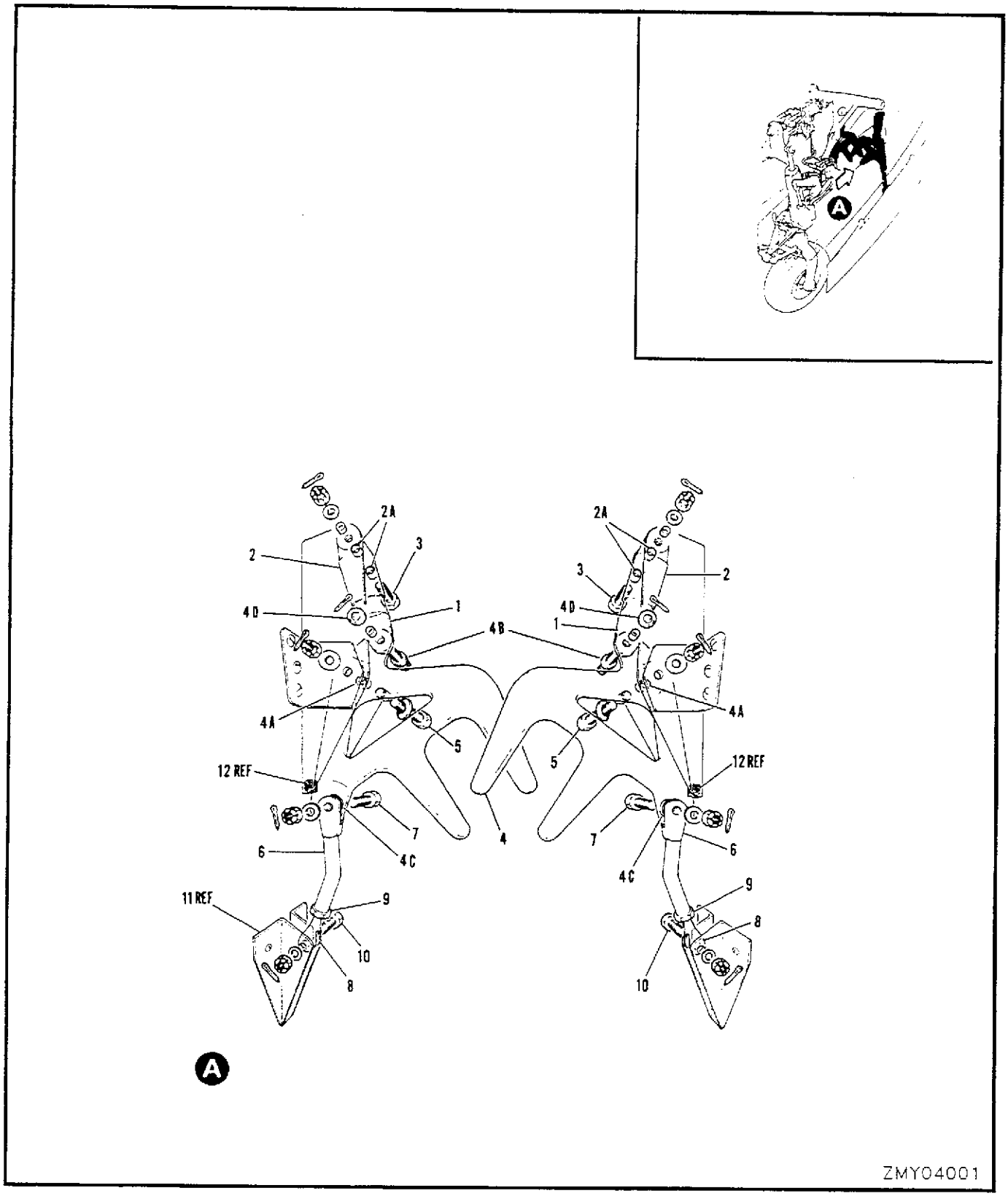

FIGURE 41 NOSE LANDING GEAR DOOR OPERATING MECHANISM

	FIGURE AND INDEX NUMBER	GROUP		LANDING GEAR	EFFEC-TIVITY	UNITS PER ASSY
		MAJOR ASSEMBLY		NOSE LANDING GEAR DOOR OPERATING MECHANISM		
		PART NUMBER		1 2 3 4 5 6 7 NOMENCLATURE		
	41 -	41A-85023		DOOR MECHANISM INSTL - NOSE GEAR		NP
	- 1	41A-87557-4		.HALF SPRING BOX - LANDING GEAR		2
		41A-87556-6		..BUSHING		1
		41A-87558		.SPRING - SPRING BOX COMPRESSION		2
	- 2	41A-87556-4		.HALF SPRING BOX - LANDING GEAR		2
		41A-87556-6		..BUSHING		1
	- 2A	NAS43DD4-35		.SPACER		4
R	- 3	NAS6204-22D		.BOLT		2
		AN960-416		.WASHER		2
		AN320-4		.NUT		2
		MS24665-136		.COTTER PIN		2
		41A-85022-12		.LEVER ASSY - CLAW		2
	- 4	41A-85022-14		..LEVER - CLAW		2
	- 4A	41A-85025		..BUSHING		2
	- 4B	41A-85024	*	..STUD - NOSE GEAR (CLAW LEVER)		2
	- 4C	ADB4V		..BEARING - (V83086)		2
	- 4D	AN960-416		.WASHER		2
		MS24665-136		.COTTER PIN		2
	- 5	41A-85028		.BOLT - NOSE GEAR DOOR MECHANISM		2
		AN960-616		.WASHER - (UNDER BOLT HEAD)		2
		AN960-416		.WASHER		2
		AN320-4		.NUT		2
		MS24665-136		.COTTER PIN		2
	- 6	41A-85026-2		.FORK END - NOSE GEAR		2
R	- 7	NAS6204-10D		.BOLT		2
		AN960-416		.WASHER		2
		AN320-4		.NUT		2
		MS24665-136		.COTTER PIN		2
	- 8	HMR4M		.ROD END - (V73134)		2
	- 9	NAS509-4		.NUT		2
R	-10	NAS6204-12D		.BOLT		2
		AN960-416		.WASHER		2
		AN320-4		.NUT		2
		MS24665-136		.COTTER PIN		2
	-11	41A-35183		BRACKET - NOSE GEAR DOOR OPERATING MECH (SEE FIG. 42)		REF
	-12	41A-35070-70		PAD - RUBBER (SEE SECTION 3)		REF
				-OOO-		
			*	FOR STUD REPLACEMENT REFER TO C-12-114-000/MN-000, FIG. 8-20.		

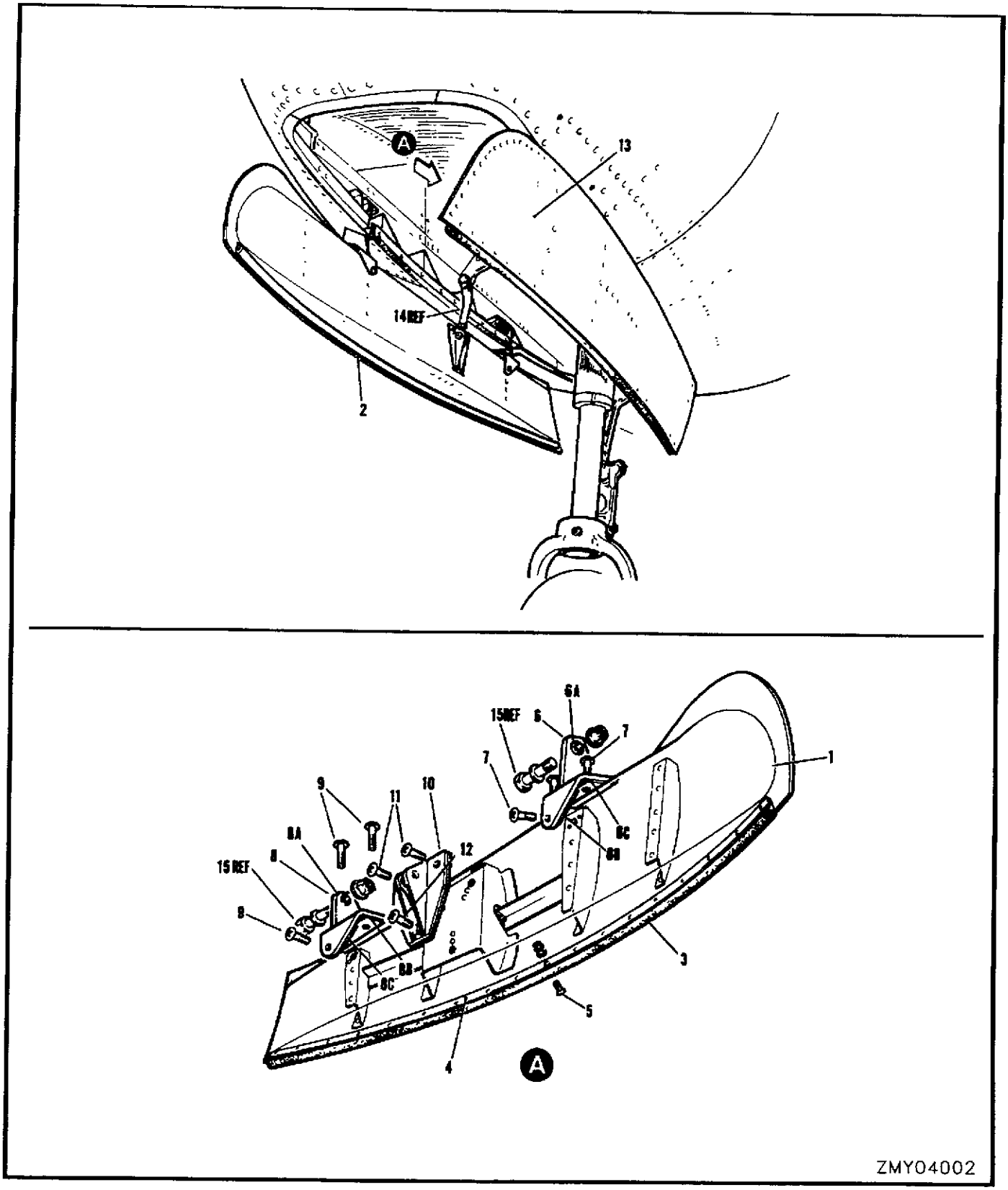

FIGURE 42 NOSE LANDING GEAR DOOR

FIGURE AND INDEX NUMBER	GROUP	LANDING GEAR	EFFEC-TIVITY	UNITS PER ASSY
	MAJOR ASSEMBLY	NOSE LANDING GEAR DOOR		
	PART NUMBER	1 2 3 4 5 6 7 NOMENCLATURE		
42 -	41A-35125-800	DOOR ASSY - NOSE LANDING GEAR LH (I) (SEE SECTION 3)		1
	41A-35125-801	DOOR ASSY - NOSE LANDING GEAR RH (I)		1
- 1	41A-35125-2	.DISH ASSY - NOSE LANDING GEAR DOOR LH		1
	41A-35125-3	.DISH ASSY - NOSE LANDING GEAR DOOR RH		1
- 2	41A-35125-34	.STOPPER - NOSE LANDING GEAR DOOR (RH)		1
- 3	41A-35125-36	.SEAL - NOSE GEAR DOOR (LH) (USE BULK MATERIAL PN S4550 OR PN S4551 OR PN S4506 AS REQUIRED)		1
- 4	41A-35125-32	.RETAINER - NOSE GEAR DOOR SEAL (LH)		1
- 5	MS24693S26	.SCREW - (LH)		17
	AN960PD6L	.WASHER - (LH)		17
	MS21042L06	.NUT - (LH)		17
	41A-35181-6	.BRACKET ASSY - NOSE GEAR DOOR HINGE LH		1
	41A-35181-7	.BRACKET ASSY - NOSE GEAR DOOR HINGE RH		1
- 6	41A-35181-8	..BRACKET - HINGE (LH)		1
	41A-35181-9	..BRACKET - HINGE (RH)		1
- 6A	ADB4V	..BEARING - (V83066)		1
- 6B	41A-35125-54	.SHIM - N/GR DOOR BRACKET		AR
- 6C	41A-35125-56	.SHIM - N/GR DOOR BRACKET		AR
- 7	MS27039-1-14	.SCREW		3
	41A-35182-6	.BRACKET ASSY - NOSE GEAR DOOR HINGE LH		1
	41A-35182-7	.BRACKET ASSY - NOSE GEAR DOOR HINGE RH		1
- 8	41A-35182-8	..BRACKET - HINGE (LH)		1
	41A-35182-9	..BRACKET - HINGE (RH)		1
- 8A	ADB4V	..BEARING - (V83066)		1
- 8B	41A-35125-54	.SHIM - N/GR DOOR BRACKET		AR
- 8C	41A-35125-56	.SHIM - N/GR DOOR BRACKET		AR
- 9	MS27039-1-14	.SCREW		3
-10	41A-35183	.BRACKET - NOSE GEAR DOOR OPERATING MECH LH		1
	41A-35183-1	.BRACKET - NOSE GEAR DOOR OPERATING MECH RH		1
	41A-35125-52	.SHIM - NOSE GEAR DOOR BRACKET (LH)		1
	41A-35125-50	.SHIM - NOSE GEAR DOOR BRACKET (RH)		1
-11	MS27039-1-11 *	.SCREW		2
-12	MS27039-1-15	.SCREW		1
-13	41A-35125-12	.SKIN - NOSE GEAR DOOR LH		1
	41A-35125-13	.SKIN - NOSE GEAR DOOR RH		1
-14	41A-85026	FORK END - (SEE FIG. 41)		REF
R -15	NAS6204-10	BOLT - (DOOR TO FUSELAGE) (SEE SECTION 3)		REF
		-OOO-		
	*	IAW C-12-114-000/CS-014		

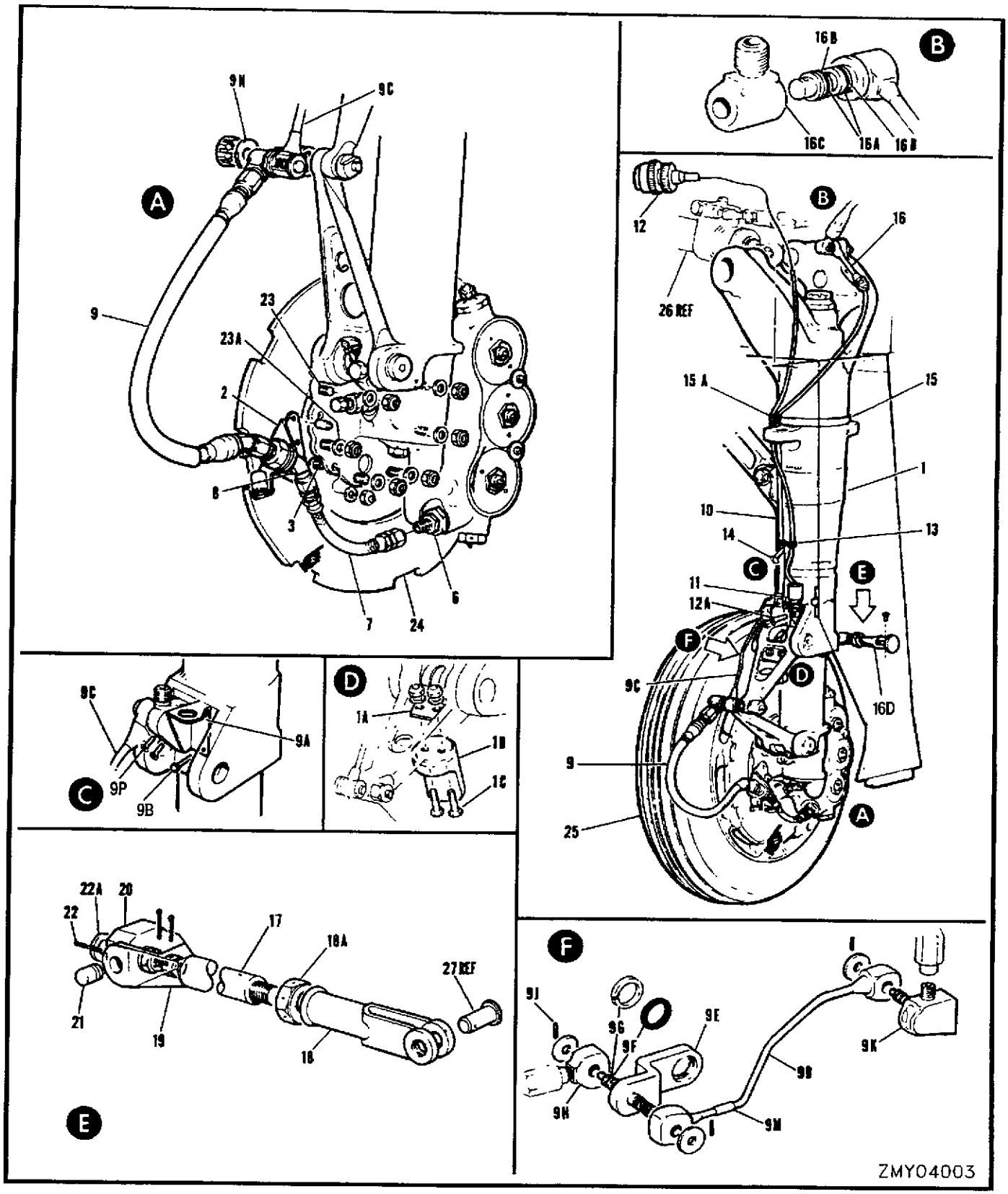

FIGURE 43 MAIN LANDING GEAR SHOCK STRUT

FIGURE AND INDEX NUMBER	GROUP	LANDING GEAR	EFFEC-TIVITY	UNITS PER ASSY
	MAJOR ASSEMBLY	MAIN LANDING GEAR SHOCK STRUT		
	PART NUMBER	1 2 3 4 5 6 7 NOMENCLATURE		
43 -	41A-87503	STRUT ASSY - MAIN LANDING GEAR SHOCK PORT		NP
- 1	3288000-5A	.STRUT ASSY - (V35962) (M/LDG/GR SHOCK LH) (FOR BRKDN SEE C-13-264-000/MS-000)		1
	3288000-6A	.STRUT ASSY - (V35962) (M/LDG/GR SHOCK RH) (FOR BRKDN SEE C-13-264-000/MS-000)		1
- 1A	41A-87503-950	.PLATE		1
- 1B	41A-87503-952	.BLOCK - FIBRE		1
- 1C	AN3-6A	.SCREW		2
	AN960PD10	.WASHER		2
	MS20500-1032	.NUT		2
- 2	41A-87562	.BRACKET ASSY - STATIC ARRESTOR LH		1
	41A-87562-1	.BRACKET ASSY - STATIC ARRESTOR RH		1
- 3	MS24694-54	.SCREW		1
	AN960-10L	.WASHER		1
	MS21042L3	.NUT		1
- 4		DELETED		
- 5		DELETED		
- 6	MS21902-4	.UNION		1
	MS28778-4	.PACKING		1
- 7	AE1002256E0047	.HOSE ASSY - (V69705) M/LDG/GR BRAKE PRESSURE		1
- 8	MS21907-4	.ELBOW		1
	AN960PD716	.WASHER		2
	AN924-4D	.NUT		1
- 9	AE1011105E0160	.HOSE ASSY - (V69705)		1
- 9A	41A-87565-10	.BRACKET ASSY - SWITCH & BRAKE SWIVEL LH		1
	41A-87565-11	.BRACKET ASSY - SWITCH & BRAKE SWIVEL RH		1
R - 9B	AN501A10-6	.SCREW		3
- 9C	3302000-1	.SWIVEL ASSY - (V35962) (MAIN GEAR BRAKE LH) (IAW 41A-87570)		1
	3302000-2	.SWIVEL ASSY - (V35962) (MAIN GEAR BRAKE RH) (IAW 41A-87570-1)		1
- 9D	3295018-1	..ELBOW ASSY - UNIVERSAL LH		1
	3295018-2	..ELBOW ASSY - UNIVERSAL RH		1
- 9E	3302017-1	..POST ASSY - BRACKET		1
- 9F	MS28778-4	..PACKING		6
- 9G	S30641-012	..SEAL		6
- 9H	3294011-1	..SWIVEL - UNIVERSAL ELBOW THREADED		1
	AN960-616L	..WASHER		3
- 9J	MS171467	..PIN		3
- 9K	3295014-1	..POST - SWIVEL LH		1
	3295014-2	..POST - SWIVEL RH		1
- 9M	3294019-5	..DECALCOMANIA - IDENTIFICATION		1
- 9N	AN960C916L	.WASHER		1
- 9P	MS24694-49	.SCREW		2
-10	41A-75201-10	.LINE ASSY - M/LDG/GR BRAKE PRESS. (PORT)		1
	41A-75201-12	.LINE ASSY - M/LDG/GR BRAKE PRESS. (STBD)		1
	41A-87503-37	.HARNESS ASSY - M/LDG/GR SHOCK STRUT		1

FIGURE AND INDEX NUMBER	GROUP	LANDING GEAR	EFFEC-TIVITY	UNITS PER ASSY
	MAJOR ASSEMBLY	MAIN LANDING GEAR SHOCK STRUT		
	PART NUMBER	1 2 3 4 5 6 7 NOMENCLATURE		
43 -11	S1419-1	..SWITCH ASSY- (V88308)(M/LDG/GR SHOCK STRUT)		1
-12	PT06SE12-10P	..PLUG - (V07213)		1
-12A	MS24693-269	.SCREW		1
-13	MS21919WDG4	.CLAMP		2
R -14	MS35207-261	.SCREW		1
	AN960PD10L	.WASHER		1
	MS21042L3	.NUT		1
-15	16505-420-1	.CLAMP ASSY - (V75829)		1
-15A	MS21919WDG4	.CLAMP		2
	AN960PD10L	.WASHER		1
	MS21042L3	.NUT		1
-16	3297000-1	.SWIVEL ASSY - (V35962) (M/LDG/GR BRAKE LINE JOINT) (IAW 41A-87504)		1
-16A	MS28775-012	..PACKING		2
-16B	30641-012	..SEAL		2
-16C	3294011-1	..ELBOW - (V35962) (UNIVERSAL SWIVEL)		1
	AN960PD716	.WASHER		1
	NAS679A7	.NUT		1
-16D	41-87078-800	.LINK ASSY - MAIN GEAR DOOR CONN PORT	001-050	1
	41-87078-801	.LINK ASSY - MAIN GEAR DOOR CONN STBD	001-050	1
	41-87078-802	.LINK ASSY - MAIN GEAR DOOR CONNECTING	051-120	1
	41-87078-804	.LINK ASSY - MAIN GEAR DOOR CONNECTING	121-	1
-17	41A-87525	..ROD - MAIN LANDING GEARDOOR		1
-18	41-87078-16	..CLEVIS	001-120	1
	41-87078-22	..CLEVIS	121-	1
-18A	NAS509-4	..NUT		1
-19	41A-87524	..FORK PIVOT - M/LDG/GR CONN LINK PORT	001-050	1
	41A-87524-1	..FORK PIVOT - M/LDG/GR CONN LINK STBD	001-050	1
	41A-87524-804	..FORK PIVOT - M/LDG/GR CONNECTING LINK	051-	1
-20	41-87080	..LUG - MAIN LANDING GEAR PIVOT	001-050	1
	41-87080-800	..LUG - MAIN LANDING GEAR PIVOT	051-	1
-21	41-87081	..PIN - MAIN LANDING GEAR		2
-22	NAS561P4-8	..PIN		2
	AN320-4	..NUT		1
	MS24665-134	..COTTER PIN		1
-22A	AN960PD616	.WASHER		AR
	AN960PD516	.WASHER		1
	AN320-5	.NUT		1
	MS24665-136	.COTTER PIN		1
-23	NAS1005-10A	.BOLT - (WHEEL RETAINING)		6
-23A	AN960PD516	.WASHER		1
	MS20500-524	.NUT		6
-24	5006305 *	.WHEEL ASSY - (V11066) (MAIN LANDING GEAR)		1
	5006306-2	.BRAKE ASSY - (V11066) (MAIN LANDING GEAR)		1
	*	IAW C-12-114-000/CF-465		

FIGURE AND INDEX NUMBER	GROUP	LANDING GEAR	EFFEC-TIVITY	UNITS PER ASSY
	MAJOR ASSEMBLY	MAIN LANDING GEAR SHOCK STRUT		
	PART NUMBER	1 2 3 4 5 6 7 NOMENCLATURE		
R 43 -25	MIL-T-5041	.TIRE - MAIN WHEEL		1
-26	3290000	ACTUATOR ASSY - M/LDG/GR (SEE SECTION 8)		REF
-27	MS20392-2C17	PIN - (LINK TO LEG DOOR) (SEE FIG. 38)		REF
		-000-		

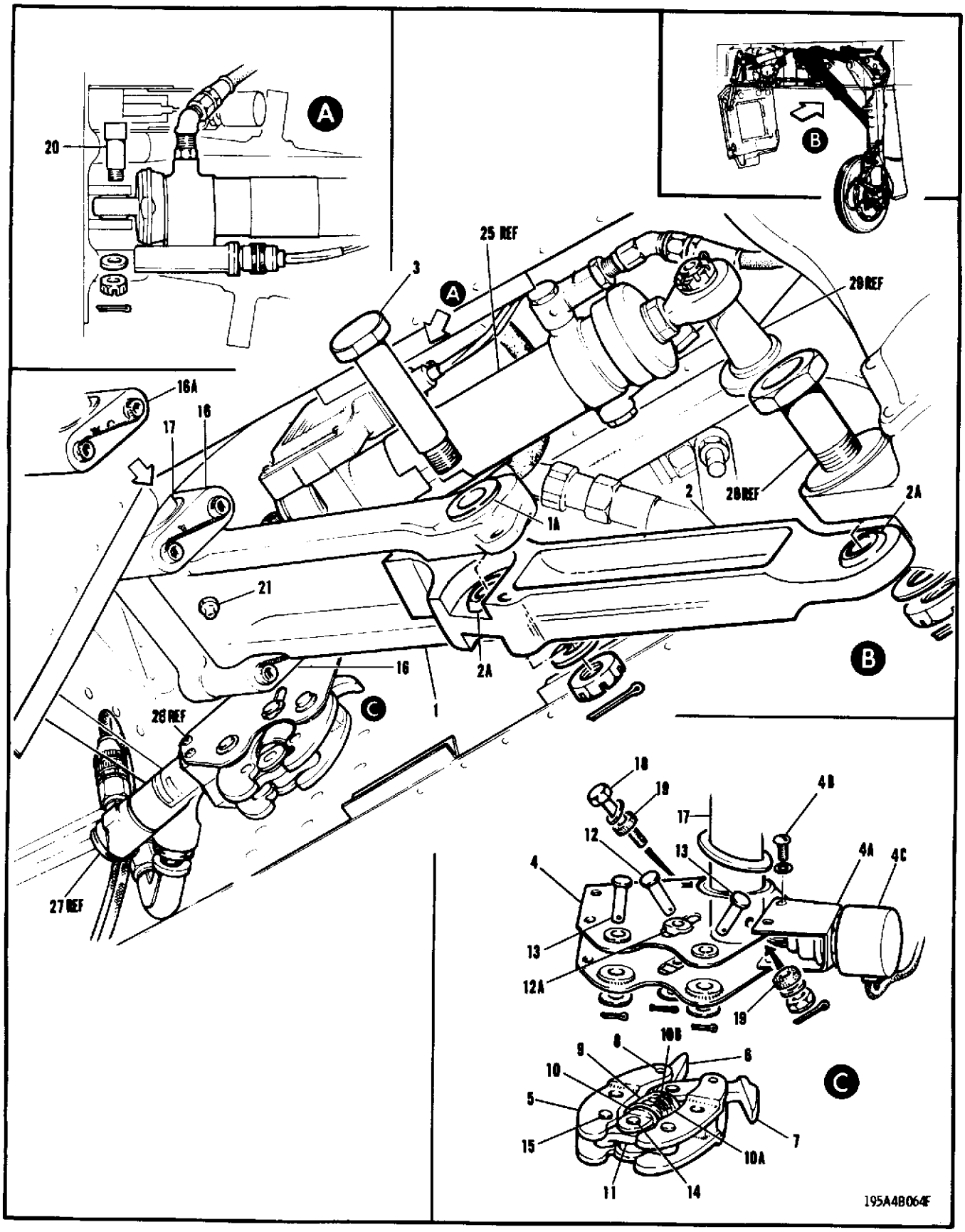

FIGURE 44 MAIN LANDING GEAR SIDESTAY & UPLOCK

FIGURE AND INDEX NUMBER	GROUP	LANDING GEAR	EFFEC-TIVITY	UNITS PER ASSY
	MAJOR ASSEMBLY	MAIN LANDING GEAR SIDESTAY & UPLOCK		
	PART NUMBER	1 2 3 4 5 6 7 NOMENCLATURE		
44 -	41A-87506-818	SIDESTAY ASSY - MAIN GEAR PORT (I) (SEE FIG. 38)		1
	41A-87506-819	SIDESTAY ASSY - MAIN GEAR STBD (I)		1
	41A-87532	.SIDESTAY ASSY - MAIN GEAR UPPER		1
- 1	41A-87532-2	..SIDESTAY - MAIN GEAR UP		1
- 1A	41A-87536	..BUSHING - UPPER SIDESTAY		4
	41A-87540	..BUSHING - UPPER SIDESTAY		2
	41A-87531-16	.SIDESTAY ASSY - MAIN GEAR LOWER		1
- 2	41A-87531-18	..SIDESTAY - LOWER		1
- 2A	MS14101-10	..BEARING - (V73134)		2
- 3	41A-87534	.BOLT - MAIN GEAR SIDESTAY		1
	AN960-816	.WASHER		1
	AN320-8	.NUT		1
	MS24665-287	.COTTER PIN		1
	41A-87508-808	.UPLOCK ASSY - MAIN GEAR PORT		1
	41A-87508-809	.UPLOCK ASSY - MAIN GEAR STBD		1
- 4	41A-87548-20	..BRACKET ASSY - MAIN GEAR		1
- 4A	41A-87571-4	..BRACKET - MAIN GEAR UPLOCK		1
	41A-87574	..LINK		1
	41A-87508-64	..PIN		1
	AN960-10L	..WASHER		1
	MS24665-132	..COTTER PIN		1
R - 4B	MS35206-245	..SCREW		4
	1108-02	..LOCK WASHER - (SHI)		4
	AN960-8L	..WASHER		4
- 4C	41A-87508-34	..SWITCH ASSY - (MAIN GEAR UPLOCK) (SEE SECTION 12)		REF
- 5	41-87020	..LEVER - MAIN GEAR DOOR UPLOCK		2
- 6	41A-87545-2	..LINK - MAIN GEAR UPLOCK UPPER LOCK		1
- 7	41-87021-4	..LINK - MAIN GEAR UPPER LOCK		1
- 8	41-87019	..PIN - MAIN GEAR (UPLOCK)		2
- 9	41-87024	..HALF SPRING BOX - MAIN GEAR		1
-10	41-87025	..HALF SPRING BOX - MAIN GEAR		1
-10A	41A-87572	..SPRING - MAIN GEAR UPLOCK COMPRESSION		1
-10B	41-87016	..SPRING - SPRING BOX COMPRESSION		1
-11	41-87023-2	..LINK - MAIN GEAR LOWER LOCK		2
-12	MS20392-3C47	..PIN		1
-12A	41A-87563	..BEARING - SLIDER		2
	MS24665-151	..COTTER PIN		1
-13	41A-87508-43	..PIN		2
	AN960-516	..WASHER		2
	MS24665-300	..COTTER PIN		2
-14	41A-87508-41	..PIN		1
	AN960-10L	..WASHER		1
	MS24665-151	..COTTER PIN		1
-15	41A-87508-42	..PIN		2
	AN960-10	..WASHER		2
	MS24665-151	..COTTER PIN		2
-16	41A-87533-8	.BLOCK ASSY - MAIN GEAR SIDESTAY ATTACHMENT	001-095	2
	41A-87533-8	.BLOCK ASSY - MAIN GEAR SIDESTAY ATTACHMENT	096-	1
-16A	41A-87533-10	.BLOCK ASSY - MAIN GEAR SIDESTAY ATTACHMENT	096-	1
	NAS561-6-22	.PIN	096-	1
-17	41-87034-2	.SHAFT - MAIN GEAR		1
	41A-87506-60	.SHIM		2
		OR		
	41A-87500-75	.SHIM		
R	S1246AB64-42-60	.WASHER - (V88308)		1
-18	AN4-17	.BOLT		1
-19	41-87050	.WASHER - MAIN GEAR RUBBER		2
	AN960-416	.WASHER		2
	AN320-4	.NUT		1
	MS24665-138	.COTTER PIN		1

FIGURE AND INDEX NUMBER	GROUP	LANDING GEAR	EFFEC-TIVITY	UNITS PER ASSY
	MAJOR ASSEMBLY	MAIN LANDING GEAR SIDESTAY & UPLOCK		
	PART NUMBER	1 2 3 4 5 6 7 NOMENCLATURE		
44 -20	41A-85018	.BOLT - LDG/GR		1
	MS20002C8	.WASHER		1
	AN320-8	.NUT		1
	MS24665-287	.COTTER PIN		1
-21	MS15001-1	.FITTING		1
-22		DELETED		
-23		DELETED		
-24		DELETED		
-25	3290000	ACTUATOR ASSY - M/LDG/GR (SEE SECTION 8)		REF
-26	NAS1110-27D	BOLT - (SIDESTAY TO MAIN GEAR) (SEE FIG. 38)		REF
-27	100994-1	ACTUATOR ASSY - (SEE SECTION 8)		REF
-28	NAS623-3-21	SCREW - (SEE SECTION 8)		REF
-29	3288000-5A	STRUT ASSY - (SEE FIG. 43)		REF
		-000-		

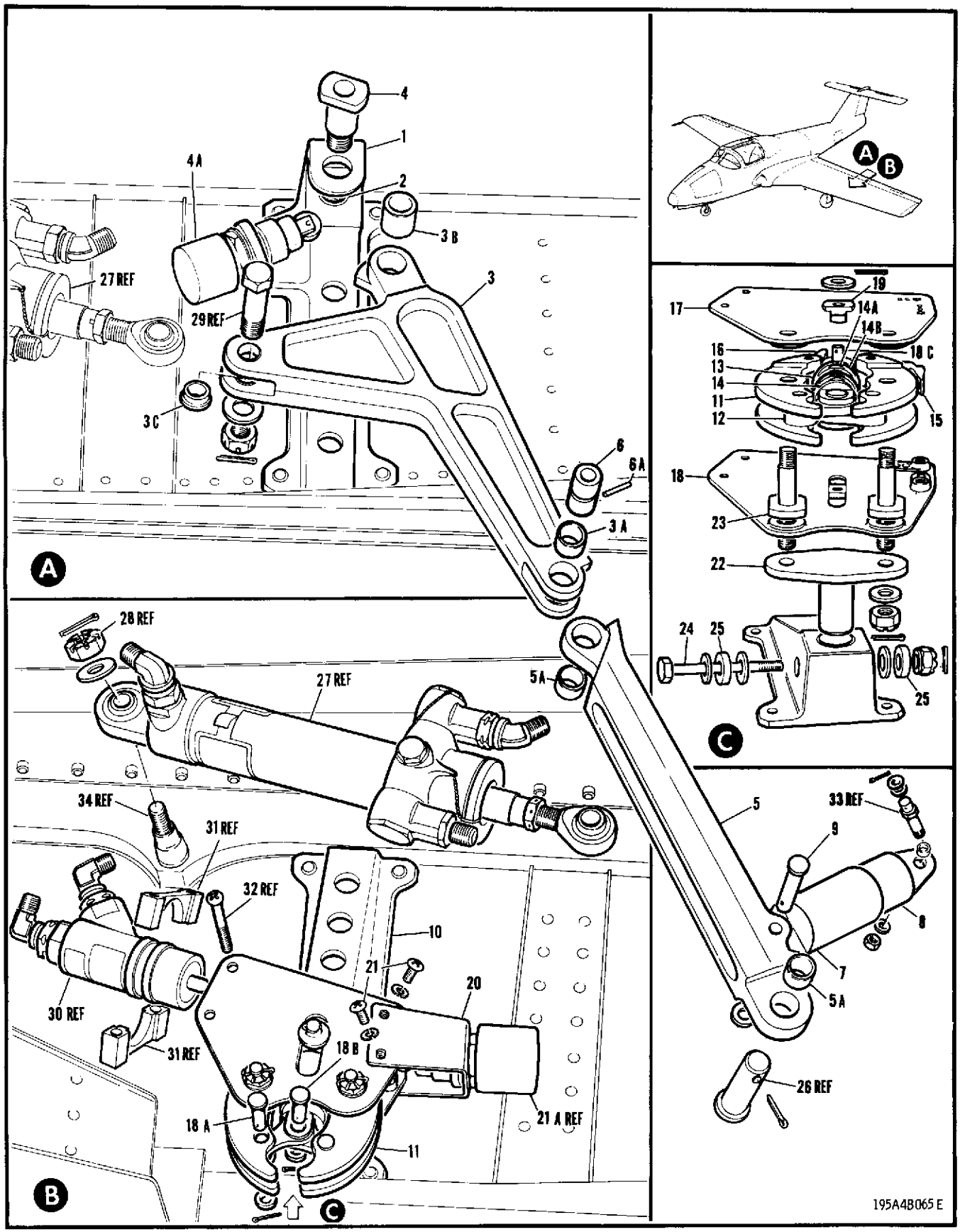

FIGURE 45 MAIN LANDING GEAR OPERATING MECHANISM

FIGURE AND INDEX NUMBER	GROUP	LANDING GEAR	EFFEC-TIVITY	UNITS PER ASSY
	MAJOR ASSEMBLY	MAIN LANDING GEAR OPERATING MECHNISM		
	PART NUMBER	1 2 3 4 5 6 7 NOMENCLATURE		
45 -	41A-87509-804	OPERATING MECH INSTL - MAIN GEAR DOOR PORT (SEE FIG. 38)		
	41A-87509-805	OPERATING MECH INSTL - MAIN GEAR DOOR STBD		NP
	41A-87521	.BRACKET ASSY - MAIN GEAR DOOR LEVER LH (JIG LOCATED)		NP
	41A-87521-1	.BRACKET ASSY - MAIN GEAR DOOR LEVER RH (JIG LOCATED)		
- 1	41A-87521-2	..BRACKET - MAIN GEAR DOOR LEVER LH		1
	41A-87521-3	..BRACKET - MAIN GEAR DOOR LEVER RH		1
- 2	MS21209F8-15	..INSERT		1
	41A-87552-800	.LEVER ASSY - MAIN GEAR DOOR LH		1
	41A-87552-801	.LEVER ASSY - MAIN GEAR DOOR RH		1
- 3	41A-87552-10	..LEVER - MAIN GEAR DOOR LH		1
	41A-87552-11	..LEVER - MAIN GEAR DOOR RH		1
- 3A	41A-87537	..BUSHING - MAIN GEAR DOOR		2
- 3B	41A-87539	..BUSHING - MAIN GEAR DOOR		1
- 3C	41A-87541	..BUSHING - MAIN GEAR DOOR		2
- 4	41A-87553	.BOLT - MAIN GEAR DOOR		1
- 4A	41A-87508-28	.SWITCH ASSY - (SEE SECTION 12)		REF
	41A-87551	.LEVER ASSY - MAIN GEAR DOOR		1
- 5	41A-87551-2	..LEVER - MAIN GEAR DOOR		1
- 5A	41A-87537-2	..BUSHING - MAIN GEAR DOOR		2
- 6	41A-87554	.PIN - MAIN GEAR DOOR		1
- 6A	NAS561P4-16	.PIN		1
- 7	41A-87556-4	.HALF SPRING BOX - LANDING GEAR		1
	41A-87558	.SPRING - SPRING BOX COMPRESSION		1
- 8	41A-87557-4	.HALF SPRING BOX - LANDING GEAR		1
	NAS43-4-21	.SPACER		2
- 9	MS20392-3C41	.PIN		1
	AN960-416L	.WASHER		1
	MS24665-155	.COTTER PIN		1
	41A-87522	.BRACKET ASSY - MAIN GEAR (JIG LOCATED)		NP
-10	41A-87522-2	..BRACKET - MAIN GEAR		1
	41A-87538	..BUSHING - MAIN GEAR DOOR BRACKET		1
	41A-87520-804	.UPLOCK ASSY - MAIN GEAR DOOR LH		1
	41A-87520-805	.UPLOCK ASSY - MAIN GEAR	DOOR RH	1
-11	41-87020	..LEVER - MAIN GEAR		2
-12	41-87023	..LINK - MAIN GEAR LOWER LOCK	001-020	2
	41-87023-2	..LINK - MAIN GEAR LOWER LOCK	021-	2
-13	41-87024	..HALF SPRING BOX - MAIN GEAR		1
-14	41-87025	..HALF SPRING BOX - MAIN GEAR		1
-14A	41-87016	..SPRING - SPRING BOX COM PRESSION		1
-14B	41A-87572	..SPRING -MAIN GEAR DOOR UPLOCK COMPRESSION		1
-15	41-87021-4	..LINK - MAIN GEAR UPPER LOCK		1
-16	41-87022-4	..LINK - MAIN GEAR UPPER LOCK		1
	41-87019	..PIN - MAIN GEAR		2
-17	41A-87549-12	..PLATE ASSY - MAIN GEAR DOOR LH		1
	41A-87549-13	..PLATE ASSY - MAIN GEAR DOOR RH		1
-18	41A-87549-14	..PLATE ASSY - MAIN GEAR DOOR LH		1
	41A-87549-15	..PLATE ASSY - MAIN GEAR DOOR RH		1
-18A	41A-87520-30	..PIN		2
-18B	41A-87520-31	..PIN		1
-18C	MS20392-3C47	..PIN		1
-19	41A-87563	..BEARING - SLIDER		2
	AN960-10	..WASHER		3
	MS24665-132	..COTTER PIN		4
-20	41A-87571	..BRACKET - MAIN GEAR DOOR UPLOCK		1
R -21	MS35206-245	..SCREW		4
	MS35333-38	..LOCK WASHER		4
	AN960-8L	..WASHER - (AS PER EO 05-		4

FIGURE AND INDEX NUMBER	GROUP	LANDING GEAR	EFFEC-TIVITY	UNITS PER ASSY
	MAJOR ASSEMBLY	MAIN LANDING GEAR OPERATING MECHNISM		
	PART NUMBER	1 2 3 4 5 6 7 NOMENCLATURE		
45 -21A	41A-87520-42	..SWITCH ASSY - MAIN GEAR UPLOCK (SEE SECTION 12)		REF
-22	41-87058-2	..PIN - MAIN GEAR DOOR PIVOT		1
-23	41-87063	..STUD - MAIN GEAR DOOR		2
	MS20002-5	..WASHER		2
	AN310-5	..NUT		2
	AN960-416	..WASHER		2
	AN310-4	..NUT		2
	MS24665-132	..COTTER PIN		4
R -24	NAS6204-24D	.BOLT		1
-25	41-87050	.WASHER - MAIN GEAR RUBBER		2
	MS20002C4	.WASHER		1
	AN960-416L	.WASHER		1
	AN320-4	.NUT		1
	MS24665-155	.COTTER PIN		1
-26	41A-87500-40	PIN - (SEE FIG. 38)		REF
-27	3289000-1	ACTUATOR ASSY - (SEE SECTION 8)		REF
-28	AN320-5	NUT - (SEE SECTION 8)		REF
-29	NAS1107-17D	BOLT - (SEE SECTION 8)		REF
-30	100994	ACTUATOR ASSY - (SEE SECTION 8)		REF
-31	41A-42309-2	BLOCK - (SEE SECTION 8)		REF
-32	NAS623-3-21	SCREW - (SEE SECTION 8)		REF
-33	41A-10512	PIVOT - (SEE FIG. 46)		REF
-34	41A-87523	SPIGOT - (SEE SECTION 1)		REF

-000-

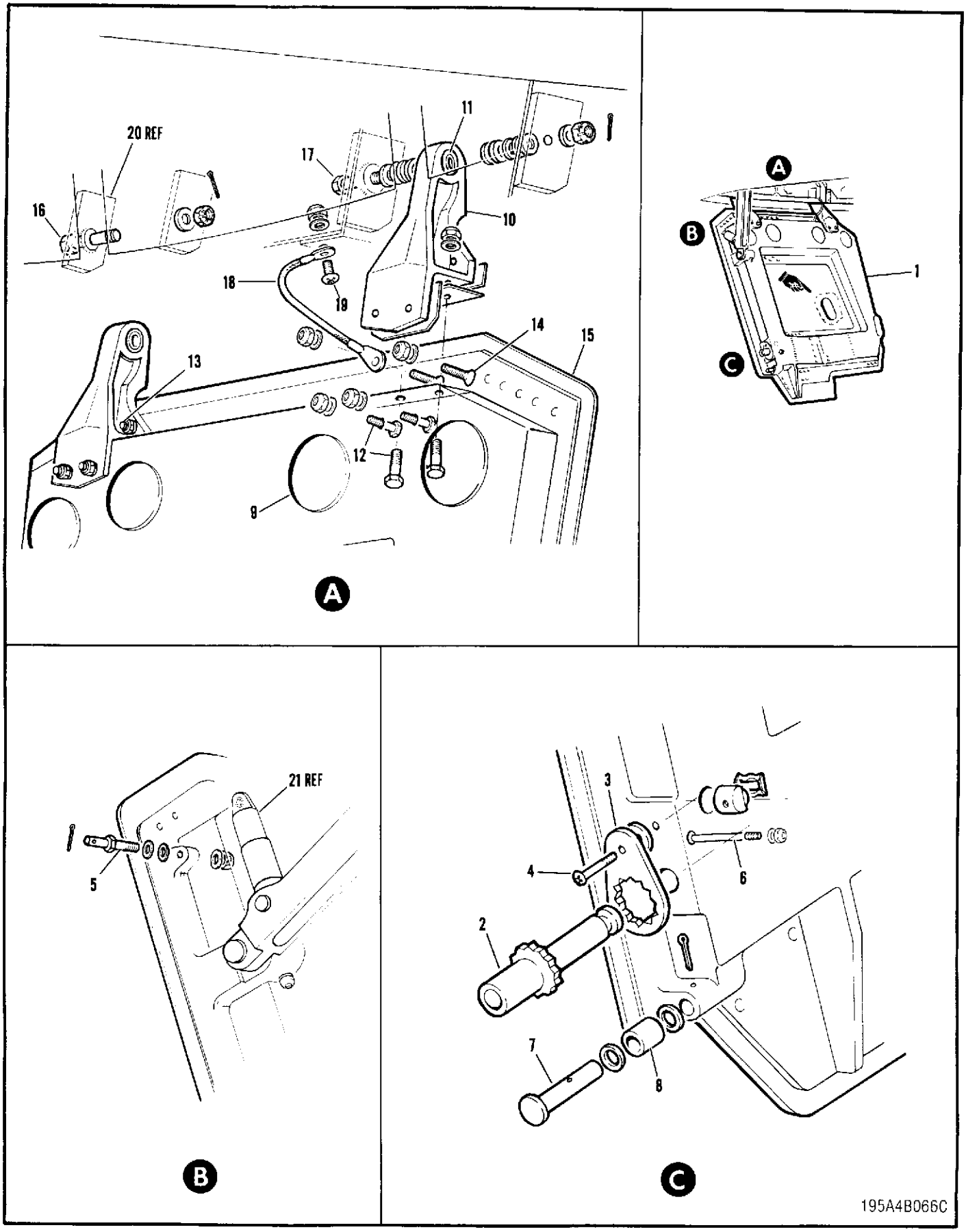

FIGURE 46 MAIN LANDING GEAR DOOR

FIGURE AND INDEX NUMBER	GROUP: LANDING GEAR MAJOR ASSEMBLY: MAIN LANDING GEAR DOOR PART NUMBER	1 2 3 4 5 6 7 NOMENCLATURE	EFFEC-TIVITY	UNITS PER ASSY
46 -	41A-10520	DOOR GENL ASSY - MAIN LANDING GEAR PORT (I) (SEE SECTION 1)		1
	41A-10520-1	DOOR GENL ASSY - MAIN LANDING GEAR STBD (I)		1
	41A-10500 *	.DOOR ASSY - MAIN LANDING GEAR LH		1
	41A-10500-1 *	.DOOR ASSY - MAIN LANDING GEAR RH		1
- 1	41A-10501	..DOOR - MAIN LANDING GEAR LH (CASTING)		1
	41A-10501-1	..DOOR - MAIN LANDING GEAR RH (CASTING)		1
- 2	41A-10510	..PIN - MAIN LANDING GEAR DOOR UPLOCK		1
- 3	41A-10511	..PLATE - MAIN GEAR DOOR UPLOCK PIN LOCKING		1
- 4	MS27039-1-14	..SCREW		1
	AN960PD10	..WASHER		1
	2452-02RET	..RETAINER - (V72962)		1
	2452-02	..NUT - (V72962)		1
- 5	41A-10512	..PIVOT - MAIN GEAR DOOR ACTE LEVER SPRING		1
	AN960PD416L	..WASHER		2
	MS21042L4	..NUT		1
- 6	NAS1202-26	..SCREW		1
	AN960PD8L	..WASHER		1
	MS21042L08	..NUT		1
- 7	41A-10513	..PIN - MAIN GEAR DOOR (ROLLER)		1
- 8	41-10519-2	..ROLLER - MAIN GEAR DOOR		1
	AN960PD416	..WASHER		2
	MS24665-134	..COTTER PIN		1
- 9	XX51362	..BUTTON - (V09736)		4
	41A-10514	..FITTING ASSY - MAIN GEAR DOOR HINGE FWD		1
	41A-10514-2	..FITTING ASSY - MAIN GEAR DOOR HINGE REAR		1
- 10	41A-10514-4	...FITTING - MAIN GEAR DOOR HINGE FWD		1
	41A-10514-6	...FITTING - MAIN GEAR DOOR HINGE REAR		1
- 11	AN206DSP4	...BEARING		2
	41A-10500-4	..SHIM		2
	41A-10500-6	..SHIM		2
	41A-10500-8	..SHIM		2
- 12	NAS1103-8	..BOLT		8
	AN960PD10L	..WASHER		8
	MS21042L3	..NUT		8
- 13	NAS1204-10	..SCREW		2
	AN960PD416	..WASHER		2
	MS21042L4	..NUT		2
- 14	NAS1204-8	..SCREW		2
	AN960PD416	..WASHER		2
	MS21042L4	..NUT		2
-14A		DELETED		
- 15	41A-10500-2	..SKIN - MAIN GEAR DOOR LH		1
	41A-10500-3	..SKIN - MAIN GEAR DOOR RH		1
R - 16	NAS6204-18D	.BOLT		1
	AN960PD416	.WASHER		1
	AN310-4	.NUT		1
	MS24665-134	.COTTER PIN		1
R - 17	NAS6204-20D	.BOLT		1
	AN960PD416	.WASHER		AR
	AN960PD416L	.WASHER		AR
	S1236-416L	.WASHER - (V88308) (SHIM)		AR
	AN310-4	.NUT		1
	MS24665-134	.COTTER PIN		1
- 18	MS25083-2AC6	.JUMPER ASSY		1
- 19	MS35206-228	.SCREW		1
	AN960PD6	.WASHER		1
	MS21042L06	.NUT		1
- 20	41A-10045	PLATE - BEARING (SEE SECTION 1)		REF
- 21	41A-87556-4	HALF SPRING BOX - LANDING GEAR (SEE FIG. 45)		REF
		-OOO-		
	*	IAW C-12-114-000/CF-465		

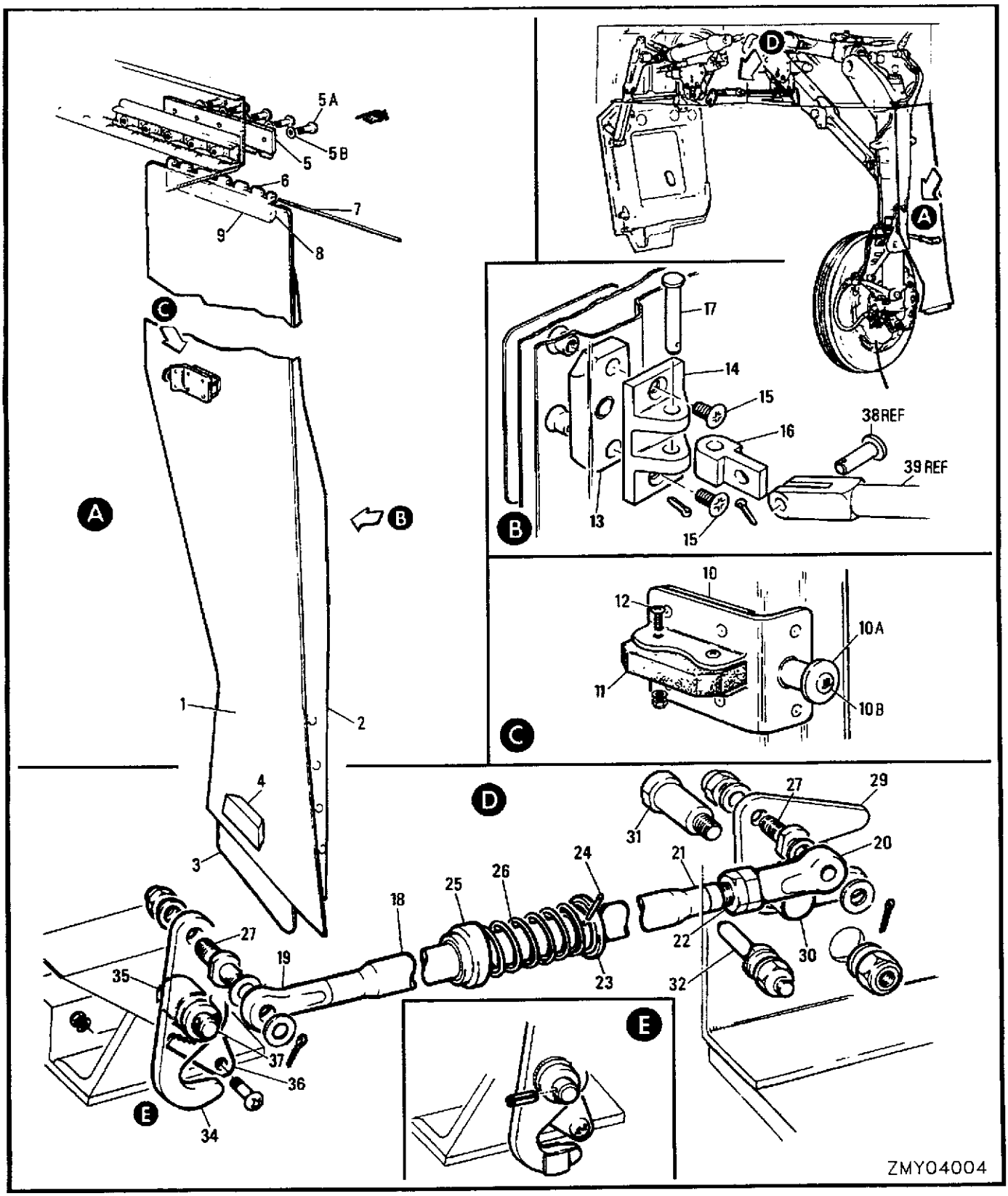

FIGURE 47 MAIN LANDING GEAR LEG DOOR & LATCH MECHANISM

FIGURE AND INDEX NUMBER	GROUP		LANDING GEAR	EFFEC-TIVITY	UNITS PER ASSY
	MAJOR ASSEMBLY		MAIN LANDING GEAR LEG DOOR & LATCH MECHANISM		
	PART NUMBER		1 2 3 4 5 6 7 NOMENCLATURE		
47 -	41A-10550-806		DOOR GENL ASSY - MAIN LDG/GR LEG LH (SEE SECTION 1)		NP
	41A-10550-807		DOOR GENL ASSY - MAIN LDG/GR LEG RH		NP
	41A-10550-58		.DOOR ASSY - MAIN LANDING GEAR LEG LH		1
	41A-10550-59		.DOOR ASSY - MAIN LANDING GEAR LEG RH		1
- 1	41A-10550-44		..PANEL - OUTER SKIN LH		1
	41A-10550-45		..PANEL - OUTER SKIN RH		1
- 2	41A-10550-46		..PANEL - INNER SKIN LH		1
	41A-10550-47		..PANEL - INNER SKIN RH		1
- 3	41A-10550-8		..STRIP - LANDING LH		1
	41A-10550-9		..STRIP - LANDING RH		1
- 4	41A-10550-14		..BLOCK - PHENOLIC LH		1
	41A-10550-15		..BLOCK - PHENOLIC RH		1
	41A-10555-804		..HINGE ASSY - MAIN LANDING GEAR DOOR		1
- 5	41A-10555-18		...HALF HINGE		1
- 5A	MS27039-1-11		...SCREW		5
- 5B	AN960PD10		...WASHER		5
- 6	41A-10555-16		...HALF HINGE		1
- 7	41A-10555-8		...PIN - MAIN LANDING GEAR DOOR HINGE		1
- 8	41A-10550-10		..BLOCK - FILLER		1
- 9	41A-10550-12		..STRIP		1
	41A-10553-6		..BRACKET ASSY - MAIN LEG DOOR UPLOCK		1
-10	41A-10553-2		...BRACKET		1
-10A	41A-10553-4		...RETAINER		1
-10B	MS24694-3		...SCREW		1
	41A-10550-16		..SHIM - LAMINATED		1
-11	K41A-10006-12	*	..BLOCK - RUBBER		1
R -12	MS35206-248		..SCREW		2
	AN960PD8L		..WASHER		2
	MS21042L08		..NUT		2
	41A-10551-10		..BLOCK ASSY - LEG DOOR DRIVE POINT MOUNTING		1
-13	41A-10551-12		...BLOCK		1
-14	41A-10559-2	*	.BRACKET - LEG DOOR DRIVE HINGE		1
-15	MS24694S50	*	.SCREW		2
	52-1650-02	*	.NUT - (V72962)		2
-16	41A-10560	*	.HINGE - LEG DOOR DRIVE		
-17	MS20392-2C37	*	.PIN		1
	AN960PD10L	*	.WASHER		1
	MS24665-130	*	.COTTER PIN		1
	41A-87510-800		LATCH MECHANISM ASSY - MLG LEG DOOR LH (SEE SECTION 1)		1
	41A-87510-801		LATCH MECHANISM ASSY - MLG LEG DOOR RH		1
	41A-87511		.PUSH ROD ASSY - MAIN GEAR LEG DOOR LOCK		1
-18	41A-87511-2		..PUSH ROD - MAIN GEAR LEG DOOR LOCK		1
-19	41-87099		..EYE END - PUSH ROD NON ADJUSTABLE		1
-20	41-87098		..EYE END - PUSH ROD ADJUSTABLE		1
-21	S1222-6-049-1032		..ROD END - (V88308)		1
-22	AN345-10		..NUT		1
		*	IAW C-12-114-000/CF-264		

FIGURE AND INDEX NUMBER	GROUP	LANDING GEAR	EFFEC-TIVITY	UNITS PER ASSY
	MAJOR ASSEMBLY	MAIN LANDING GEAR LEG DOOR & LATCH MECHANISM		
	PART NUMBER	1 2 3 4 5 6 7 NOMENCLATURE		
47 -23	41A-87512	..GUIDE - SPRING (MAIN GEAR DOOR LATCH)		1
-24	NAS561P2-10	..PIN		1
-25	41A-87513	.GUIDE - SPRING (MAIN GEAR DOOR LATCH)		1
-26	41A-87514	.SPRING - COMPRESSION		1
-27	41-87094-2	.BOLT - STUD		2
	AN960PD10L	.WASHER		2
	AN960-10L	.WASHER		2
	MS21042L3	.NUT		2
	MS24665-134	.COTTER PIN		2
-28		DELETED		
	41A-87526-8	.FORK ASSY - LEG DOOR MECHANISM DRIVE LH		1
	41A-87526-9	.FORK ASSY - LEG DOOR MECHANISM DRIVE RH		1
-29	41A-87526-2	..FORK - LEG DOOR MECHANISM DRIVE		1
-30	41A-87515	..BUSHING		1
-31	41A-87529	.BOLT - STUD		1
	AN960-416L	.WASHER		1
	MS21042L4	.NUT		1
-32	41-87094-6	.BOLT - STUD		1
	AN960PD6	.WASHER		2
	MS21042L3	.NUT		1
-33		DELETED		
	41A-87527-6	.HOOK ASSY - LEG DOOR MECHANISM LATCH LH		1
	41A-87527-7	.HOOK ASSY - LEG DOOR MECHANISM LATCH RH		1
-34	41A-87527-8	..HOOK - LEG DOOR MECHANISM LATCH		1
-35	41A-87516	..BUSHING		1
-36	41A-87519-6	.PLATE - MAIN GEAR DOOR LATCH LOCKING		1
	AN960PD6	.WASHER		1
R	S1256C632-7A	.SCREW - (V88308)		1
	MS21042L06	.NUT		1
-37	41A-87528	.BOLT - STUD		1
	AN960PD716L	.WASHER		AR
	AN960-716L	.WASHER		1
-37A	NAS561P4-10	.PIN		1
	AN960-416L	.WASHER		1
	MS21042L4	.NUT		1
-38	MS20392-2C17	PIN - (LINK TO LEG DOOR) (SEE FIG. 38)		REF
-39	41-87078-16	CLEVIS - (SEE FIG. 43)		REF

-OOO-

SECTION 5

POWER PLANT

TABLE OF CONTENTS

FIGURE	TITLE	PAGE
48	COMPLETE POWER PLANT	5-02
49	POWER PLANT MOUNTS	5-06
50	DELETED	5-08
51	DELETED	5-12
52	JET PIPE & DRAIN	5-16
53	POWER PLANT DRAINS	5-20
54	ZONE 1 & 2 & GENERATOR COOLING	5-24
55	ZONE 2 COOLING JET PUMPS	5-26

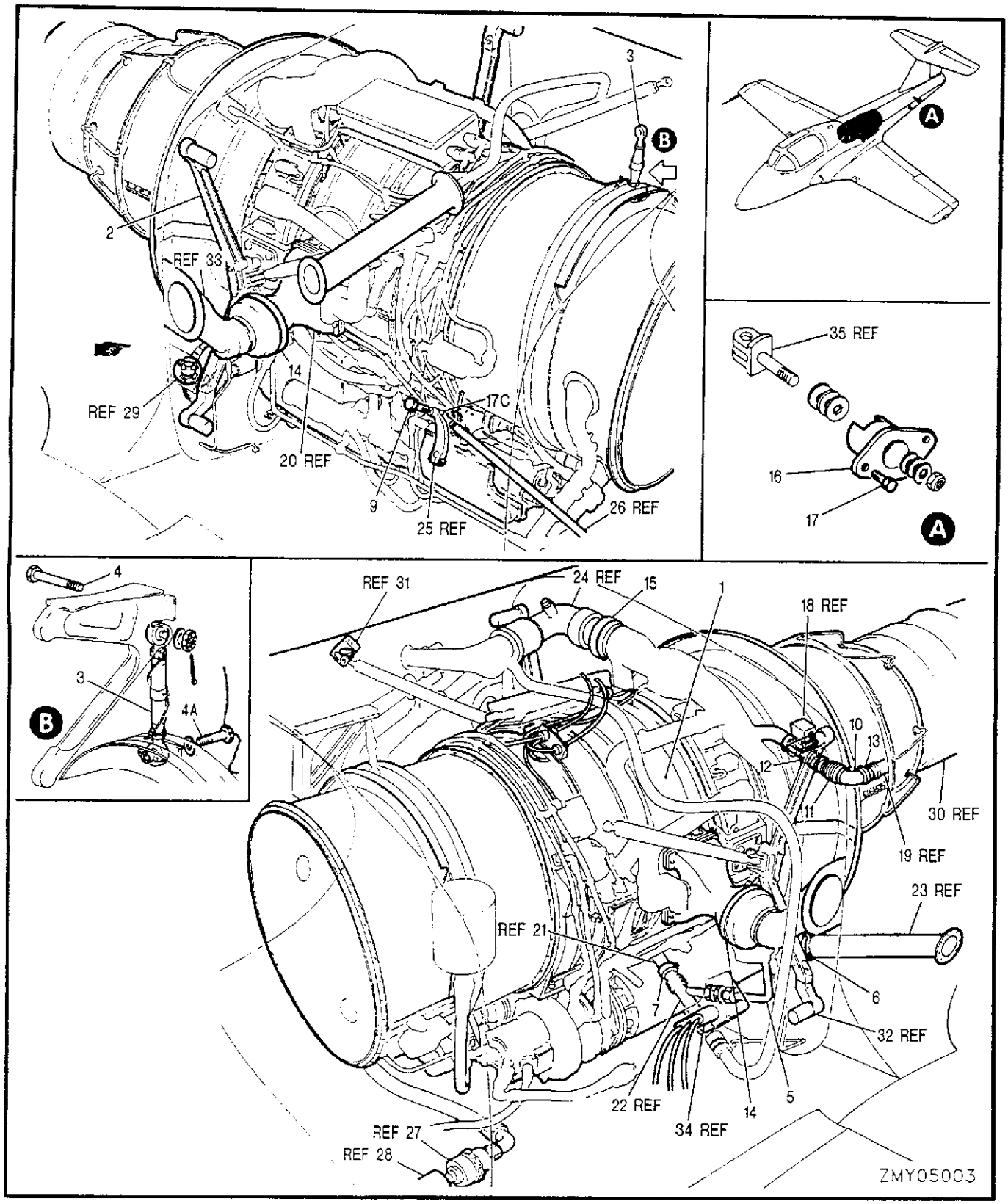

FIGURE 48 COMPLETE POWER PLANT

FIGURE AND INDEX NUMBER	GROUP	POWER PLANT	EFFEC-TIVITY	UNITS PER ASSY
	MAJOR ASSEMBLY	COMPLETE POWER PLANT		
	PART NUMBER	1 2 3 4 5 6 7 NOMENCLATURE		
48 -	41A-44000	POWER PLANT INSTL - COMPLETE (SEE SECTION 3)		NP
- 1	41A-61100-806	.POWER PLANT ASSY - DEMOUNTABLE (SEE C-14-165-000/MY-000, PART 2A)		REF
- 2	41A-61200	.MOUNT INSTL - ENGINE MAIN (SEE FIG. 49)		REF
- 3	41A-61201	.MOUNTING ASSY - ENGINE FWD (SEE FIG. 49)		REF
- 4	NAS6204-15D	.BOLT		1
	AN960-416	.WASHER		1
	AN320-4	.NUT		1
	MS24665-134	.COTTER PIN		1
- 4A	NAS6204-14	.BOLT - (WITH HEAD DRILLED 1/16 .0625 DIA. 2 PLACES)		1
	AN960-416	.WASHER		1
- 5	41A-99202-2	.DUCT ASSY - GENERATOR COOLING (SEE FIG. 54)		REF
- 6	24540-150	.CLAMP - (V69705)		1
- 7	24540-125	.CLAMP - (V69705)		1
- 8		DELETED - (SEE ITEM -29)		
R - 9	NAS6204-13D	.BOLT - (SEE C-14-165-000/MY-000, PART 2A)		REF
		DELETED - (SEE C-14-165-000/MY-000, PART 2A)		
		DELETED - (SEE C-14-165-000/MY-000, PART 2A)		
		DELETED - (SEE C-14-165-000/MY-000, PART 2A)		
	41A-99208	.ELBOW ASSY - ZONE 2 COOLING FLEXIBLE		1
-10	502563-24-6/64	..DUCT - (V69705)		1
	41A-99207	..FLANGE - ZONE 2 COOLING (WELDED)		1
-11	10225-68-1	..JOINT - (V70628) (METAL FLEXIBLE) (IAW 41A-98102-8)		1
	24538-150	..FLANGE - (V69705) (WELDED)		1
	7402	..TAPE - (V36790)		AR
	7000	..TAPE - (V36790)		AR
-12	52869-150	.COUPLING - (V75829)		1
	S1442-1	.GASKET - (V88308)		1
-13	24540-150	.CLAMP - (V69705)		1
-14	QS200M68W	.CLAMP - (V08484) (COMPRESSOR BLEED LEAKAGE DUCT - LARGE)		2
	QS200M48S	.CLAMP - (V08484) (COMPRESSOR BLEED LEAKAGE DUCT - SMALL)		2
-15	18276-250	.CLAMP - (V69705)		1
	24346-250C	.GASKET - (V69705)		1
-16	41A-61311	.BRACKET - JET PIPE REAR END MOUNTING		1
-17	NAS1004-2A	.BOLT		4
	S1246AB16-22-63	.WASHER - (V88308) (CLEVIS SHIM)		4
	S1246AB16-22-50	.WASHER - (V88308) (CLEVIS SHIM)		2
	S1246AB16-22-40	.WASHER - (V88308) (CLEVIS SHIM)		2
	S1246AB16-22-20	.WASHER - (V88308) (CLEVIS SHIM)		2
	MS21042L4	.NUT - (CLEVIS RETAINING)		2
-17A		DELETED		
-17B		DELETED		
-17C	NAS43HT4-7	SPACER - (SEE C-14-165-000/MY-000, PART 2A)		REF
-18	104260	VALVE - AIR SHUT OFF (SEE C-14-165-000/MY-000, PART 2A)		REF
-19	41A-99209-26	TUBE ASSY - ZONE 2 COOLIN G (SEE FIG. 55)		REF
-20	41A-61407	DUCT - COMPRESSOR BLEED AIR (SEE C-14-165-000/MY-000, PART 2A)		REF
-21	41A-42009	DUCT ASSY - ZONE 1 COOLING (SEE C-14-165-000/MY-000, PART 2A)		REF

	FIGURE AND INDEX NUMBER	GROUP / MAJOR ASSEMBLY / PART NUMBER	POWER PLANT / COMPLETE POWER PLANT / 1 2 3 4 5 6 7 NOMENCLATURE	EFFEC-TIVITY	UNITS PER ASSY
	48 -22	41A-99202-6	DUCT ASSY - GENERATOR COOLING (SEE FIG. 54)		REF
	-23	41A-99202-4	DUCT ASSY - GENERATOR COOLING (SEE FIG. 54)		REF
	-24	41A-98206	DUCT ASSY - FLEXIBLE ELBOW (SEE SECTION 9)		REF
R	-25	41A-90773-10	LEVER - POWER CONTROL (SEE C-14-165-000/MY-000, PART 2A)		REF
	-26	40250	PUSH PULL UNIT - (POWER CTL)(SEE SECTION 7)		REF
R	-27	41A-65400-52	DISCONNECT ASSY - FUEL INLET QUICK (SEE C-14-165-000/MY-000, PART 2A)		REF
	-28	700070	STRAINER ASSY - (FUEL SYS) (SEE SECTION 6)		REF
R	-29	41A-61600	FILLER INSTL - OIL SYSTEM (SEE C-14-165-000/MY-000, PART 2A)		REF
	-30	41A-61300	JET PIPE INSTL - (SEE FIG. 52)		REF
	-31	41A-35178-4	MOUNTING - ENGINE FORWARD (SEE SECTION 3)		REF
	-32	41A-35148	MOUNTING INSTL - FUSELAGE STA 306 ENGINE (SEE SECTION 3)		REF
	-33	41A-61405	DUCT ASSY - COMPRESSOR BLEED EXIT (SEE SECTION 3)		REF
	-34	8300/300	SHUNT - (TYPE MSB30/1) (SEE SECTION 13)		REF
	-35	41A-61310	CLEVIS - JET PIPE MOUNTING (SEE FIG. 52)		REF

-000-

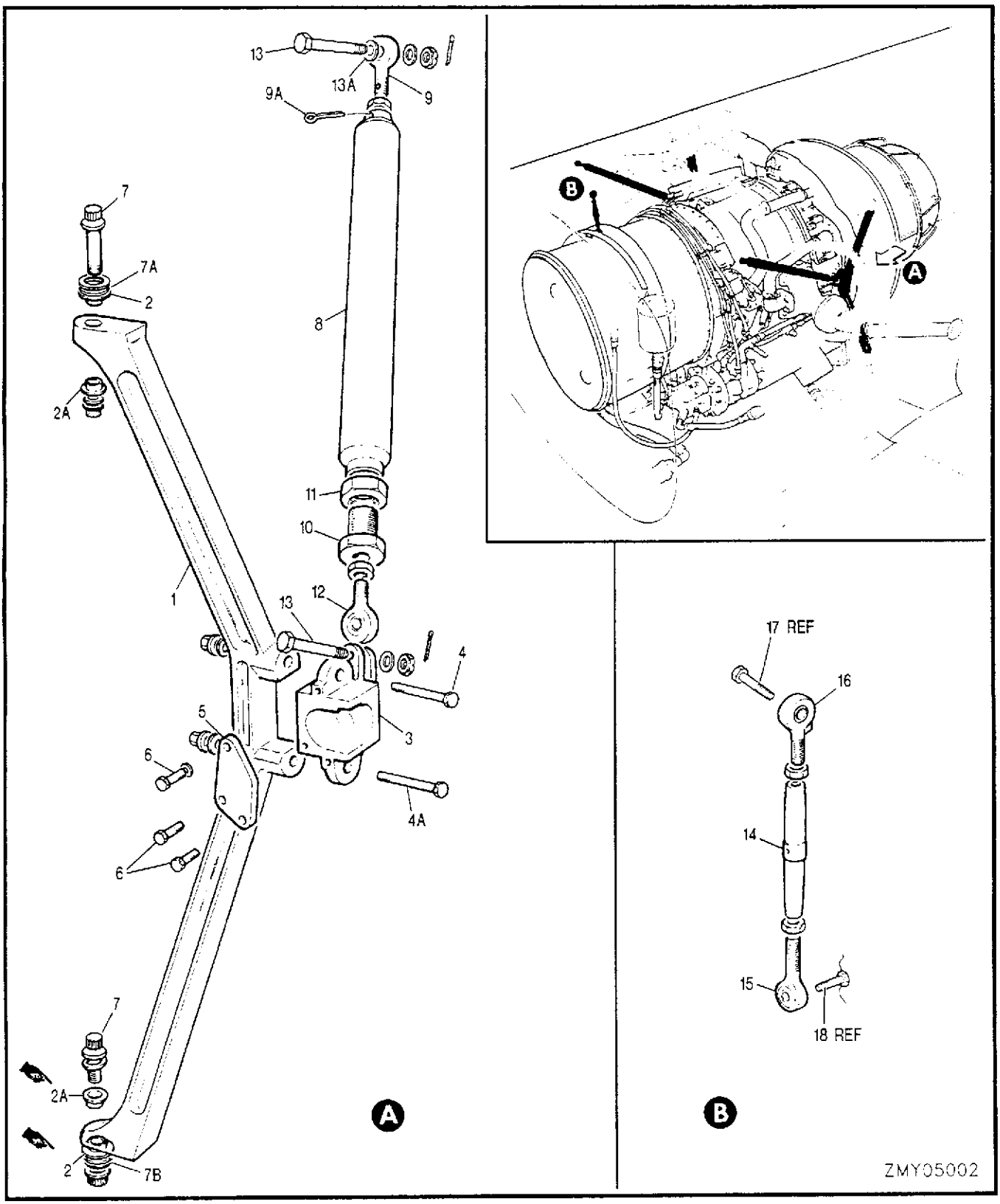

FIGURE 49 POWER PLANT MOUNTS

FIGURE AND INDEX NUMBER	GROUP	POWER PLANT	EFFEC-TIVITY	UNITS PER ASSY
	MAJOR ASSEMBLY	POWER PLANT MOUNTS		
	PART NUMBER	1 2 3 4 5 6 7 NOMENCLATURE		
49 -	41A-61200	MOUNT INSTL - ENGINE MAIN LH (SEE FIG. 48)	001-007	NP
	41A-61200-800	MOUNT INSTL - ENGINE MAIN LH	008-	NP
	41A-61200-1	MOUNT INSTL - ENGINE MAIN RH	001-007	NP
	41A-61200-801	MOUNT INSTL - ENGINE MAIN RH	008-	NP
	41A-61200-2	.MOUNT ASSY - ENGINE MAINLH		1
	41A-61200-3	.MOUNT ASSY - ENGINE MAIN RH		1
	41A-61210	..MOUNT ASSY - GE ENGINE MAIN		1
- 1	41A-61210-2	...MOUNT - ENGINE MAIN		1
- 2	41A-61213-2	...BUSHING - ENGINE MAIN MOUNT (LARGE)		2
- 2A	41A-61213-4	...BUSHING - ENGINE MAIN MOUNT (SMALL)		2
- 3	41A-61211-2	..HOUSING - ENGINE MAIN MOUNT TRUNNION LH		1
	41A-61211-3	..HOUSING - ENGINE MAIN MOUNT TRUNNION RH (FOR SPARES ORDER 41A-61211-5)		1
	41A-61211-5	..HOUSING - ENGINE MAIN MOUNT TRUNNION RH (SPARE FOR 41A-61211-3)		
R - 4	NAS6204-34	..BOLT		1
R - 4A	NAS6204-36	..BOLT		1
	AN960-416	..WASHER		2
	MS21042L4	..NUT		2
- 5	41A-61212	.PLATE - TRUNNION HOUSING LOCKING LH		1
	41A-61212-1	.PLATE - TRUNNION HOUSING LOCKING RH		1
- 6	NAS1303-8H	.BOLT		3
	AN960C10	.WASHER		3
- 7	NAS626-22	.BOLT		2
	S1242-6A	.WASHER - (V88308)		2
- 7A	41A-61200-32	.SHIM - ENGINE MAIN MOUNT UPPER		1
- 7B	41A-61200-34	.SHIM - ENGINE MAIN MOUNT LOWER		1
	AN960-616	.WASHER		2
	ZEB1845-064	.NUT - (V72962)		2
	41A-61220	.STRUT ASSY - ENGINE MAIN MOUNT FORWARD	001-007	1
	41A-61220-800	.STRUT ASSY - ENGINE MOUNT FORWARD	008-	1
- 8	41A-61221	..STRUT ASSY - ENGINE MOUNT FWD (WELDED)		1
- 9	KE4-10	..ROD END - (V97613) (RH THREAD) (IAW 41A-60513-2)		1
	NAS509-6	..NUT		1
- 9A	MS24665-138	..COTTER PIN	008-	1
-10	41A-61223	..SCREW - FORWARD STRUT ADJUSTMENT		1
-11	NAS509-10	..NUT		1
-12	KEL4-10	..ROD END - (V97613) (LH THREAD) (IAW 41A-60513-4)		1
	NAS509L6	..NUT		1
-13	NAS464P4-14	.BOLT		2
-13A	AN960-416L	.WASHER		1
	AN960C416L	.WASHER		1
	AN320-4	.NUT		2
	MS24665-132	.COTTER PIN		2
	41A-61201	MOUNTING ASSY - ENGINE FWD (SEE FIG. 48)		1
-14	41A-61201-6	.BARREL - TURNBUCKLE		1
-15	KE4-10	.ROD END - (V97613) (RH THREAD) (IAW 41A-60513-2)		1
	NAS509-6	.NUT		1
-16	KEL4-10	.ROD END - (V97613) (LH THREAD) (IAW 41A-60513-4)		1
	NAS509L6	.NUT		1
R -17	NAS6204-15D	BOLT - (SEE FIG. 48)		REF
-18	NAS6204-14	BOLT - (SEE FIG. 48)		REF

-OOO-

(Pages 5-08 to 5-14 inclusive are deleted by this change.)

(Figures 50 and 51 are deleted by this change.)

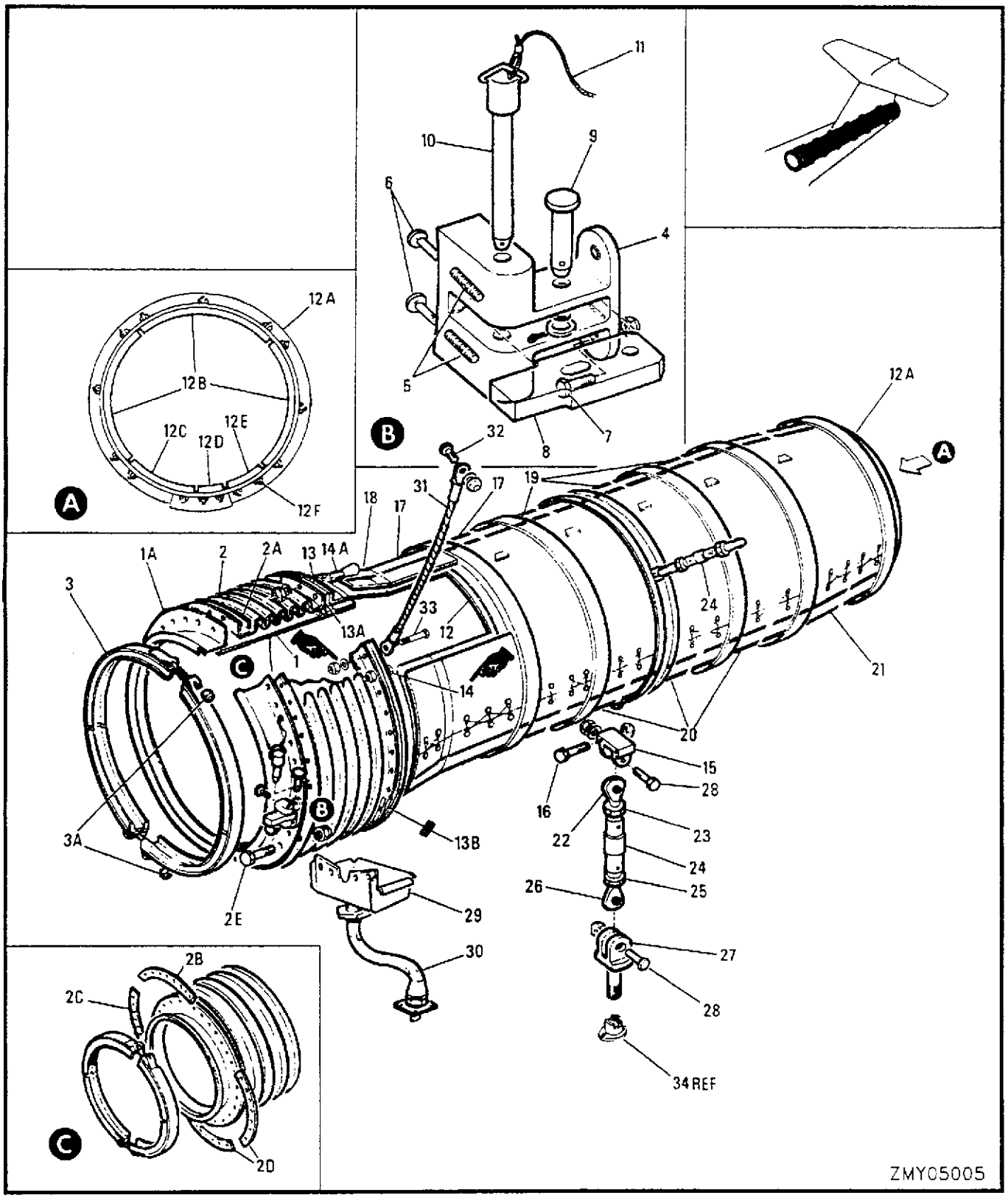

FIGURE 52 JET PIPE & DRAIN

FIGURE AND INDEX NUMBER	GROUP: POWER PLANT MAJOR ASSEMBLY: JET PIPE & DRAIN PART NUMBER	1 2 3 4 5 6 7 NOMENCLATURE	EFFEC-TIVITY	UNITS PER ASSY
52 -	41A-44000-2	JET PIPE INSTL - POWER PLANT (SEE SECTION 3)		NP
	41A-61300-800	.JET PIPE INSTL - (POWER PLANT)		NP
- 1	41A-61301	..JET PIPE ASSY - FORWARD SECTION		1
- 1A	58078	...FLANGE - (V69705) (SEAM WELDED) (IAW 41A-60505-2)		1
- 2	0310-272-501	..BELLOWS - (V08471) (JET PIPE) (IAW 41A-60505)		1
- 2A	41A-61313-6	..RING - JET PIPE		2
- 2B	41A-61318-4	..SEGMENT - JET PIPE RING (UPPER LH)		1
- 2C	41A-61318-6	..SEGMENT - JET PIPE RING (UPPER RH)		1
- 2D	41A-61318-2	..SEGMENT - JET PIPE RING (LOWER LH & RH)		2
- 2E	NAS1003-2A	..BOLT		24
	MS20500-1032	..NUT		24
- 3	NH1004489-10	..COUPLING ASSY - (V69705) (JET PIPE ATT) (IAW 41A-60505-8)		1
	MVT60050-10	...COUPLING HALF ASSY - (V69705) (IAW 41A-60505-4)		2
- 3A	Z1200-048	...NUT - (V72962)		2
	41A-61306	..BRACKET ASSY - JET PIPE SAFETY LATCH		4
- 4	41A-61306-2	...BRACKET - JET PIPE SAFETY LATCH		1
- 5	MS21209F1-20	...INSERT		2
- 6	MS27039-1-08	..SCREW		8
- 7	NAS1003-2A	..BOLT		12
	MS20500-1032	..NUT		12
- 8	41A-61305-2	..LATCH - JET PIPE SAFETY		4
		OR		
	41A-61305-6	..LATCH - JET PIPE SAFETY		4
		OR		
	41A-61305-8	..LATCH - JET PIPE SAFETY		4
- 9	MS20392-2P21	..PIN - (V88308)		4
	AN960C10L	..WASHER		4
	MS24665-151	..COTTER PIN		4
-10	VP1073-4-14	..PIN - (VOI) (QUICK RELEASE)		4
		OR		
	SL19381-4-14	..PIN - (SPK) (QUICK RELEASE)		
-11	MIL-W-83420 *	..WIRE ROPE		AR
R	MS35446-12 *	..TERMINAL LUG		1
	BUR610-2 *	..SWAGING SLEEVE		1
	41A-61309-802	..JET PIPE ASSY - REAR SECTION		1
-12	41A-61309-2	...WELD ASSY - JET PIPE		1
-12A	41A-61309-58	...WELD ASSY - JET PIPE SEGMENT		1
-12B	41A-61309-66	...SEGMENT - JET PIPE (UPPER, LH & RH)		3
-12C	41A-61309-68	...SEGMENT - JET PIPE		1
-12D	41A-61309-70	...SEGMENT - JET PIPE		1
-12E	41A-61309-72	...SEGMENT - JET PIPE		1
-12F	MS24693C271	...SCREW		15
	MS20500-1032	...NUT		15
-13	41A-61304-800	..RING - JET PIPE		2
-13A	41A-61313-8	..RING - JET PIPE		2
-13B	41A-61300-72	..SHIM - (UPPER RH & LOWER LH)		AR
	41A-61300-73	..SHIM - (UPPER LH & LOWER RH)		AR
-14	NAS1004-5A	..BOLT		36
-14A	41A-61317	..PIN - JET PIPE SPECIAL TAPERED		2
	AN960C416	..WASHER		2
	MS20500-428	..NUT		38
-15	41A-61312	..FITTING - JET PIPE REAR MOUNTING CLEVIS		2
-16	NAS1004-16A	..BOLT		4
	MS20500-428	..NUT		4
-17	22866-5	..BLANKET - UPPER (TCO) (JET PIPE) (IAW 41G60004-5)		4
	22866-3	..BLANKET - LOWER (TCO) (JET PIPE) (IAW 41G60004-7)		4
-18	121009-1	..BLANKET - (TCO) (JET PIPE) (IAW 41A-60507-6)		1
	*	IAW C-12-114-000/CF-446		

FIGURE AND INDEX NUMBER	GROUP	POWER PLANT	EFFEC-TIVITY	UNITS PER ASSY
	MAJOR ASSEMBLY	JET PIPE & DRAIN		
	PART NUMBER	1 2 3 4 5 6 7 NOMENCLATURE		
R 52 -19	22866-9	..BLANKET - UPPER (TCO) (JET PIPE) (IAW 41G60004-9)		3
R -20	22866-13	..BLANKET - LOWER (TCO) (JET PIPE) (IAW 41G60004-13)		3
-21	121009-4	..BLANKET - (TCO) (JET PIPE) (IAW 41A-60507-12)		1
	41A-61300-36	..TURNBUCKLE ASSY - JET PIPE SECURING LOWER		1
	41A-61300-38	..TURNBUCKLE ASSY - JET PIPE SECURING SIDE		1
-22	2BREM4A	...ROD END - (V81376)		1
-23	NAS509-5	...NUT		1
-24	41A-61300-18	...BARREL - TURNBUCKLE		1
-25	NAS509L5	...NUT		1
-26	2BREMLH4A	...ROD END - (V81376)		1
-27	41A-61310	..CLEVIS - JET PIPE MOUNTING		2
-28	NAS1004-10A	..BOLT		4
	MS20500-428	..NUT		4
	41A-61315-10	..DRAIN ASSY - JET PIPE LOWER		1
-29	41A-61314	...SCUPPER ASSY - JET PIPE DRAIN		1
	NAS1004-6A	...BOLT		1
-30	AE1002208G0160	...HOSE ASSY - (V69705)		1
-31	41A-61308	.CABLE ASSY - JET PIPE SUSPENSION		2
-32	NAS1003-2A	.BOLT		2
	AN960-10	.WASHER		2
	MS20500-1032	.NUT		2
-33	NAS1003-6A	.BOLT		2
	AN960C10	.WASHER		2
	MS20500-1032	.NUT		2
-34	41A-61311	BRACKET - JET PIPE REAR END MOUNTING (SEE FIG. 48)		REF

-000-

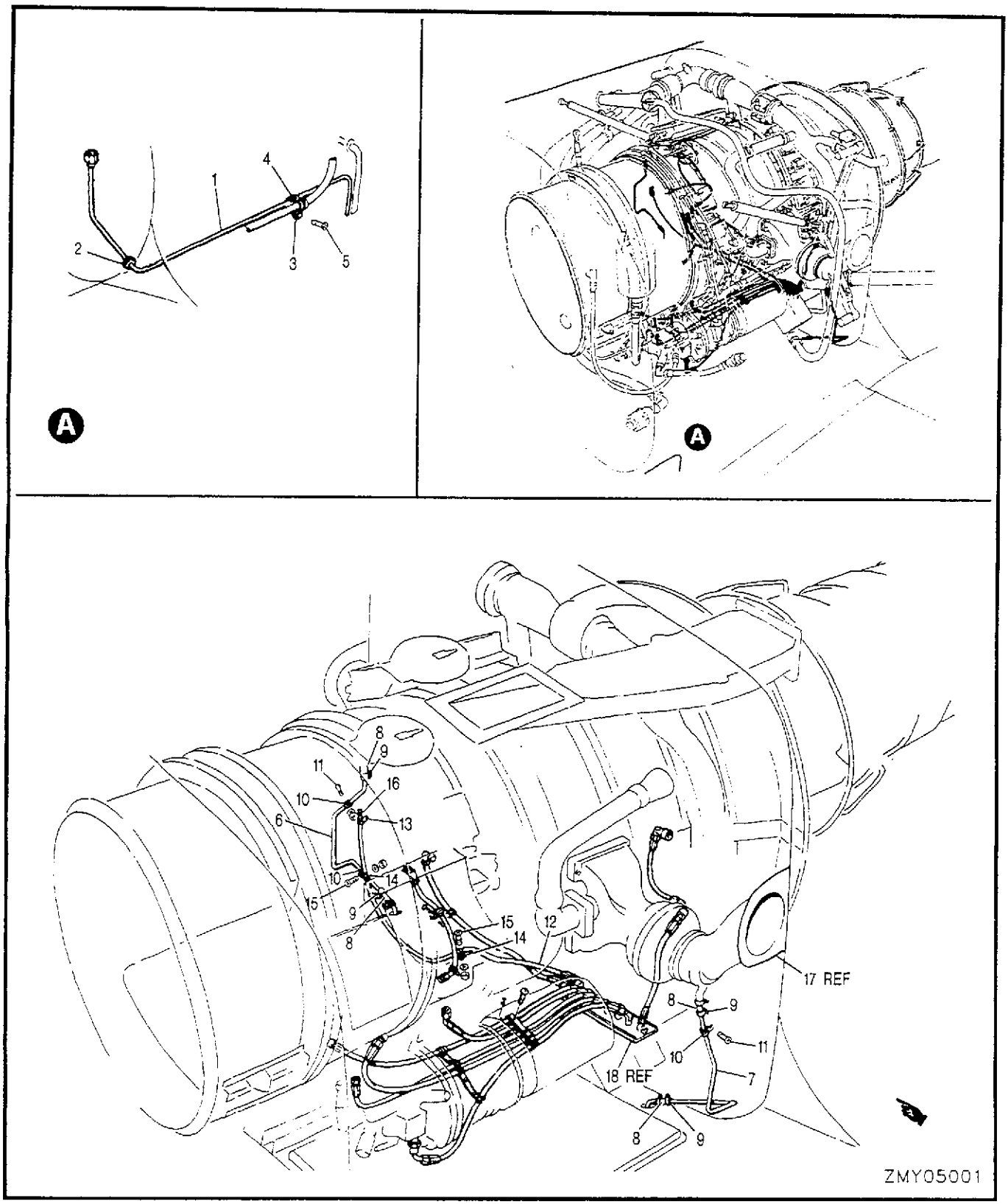

FIGURE 53 POWER PLANT DRAINS

	FIGURE AND INDEX NUMBER	GROUP: POWER PLANT MAJOR ASSEMBLY: POWER PLANT DRAINS PART NUMBER	1 2 3 4 5 6 7 NOMENCLATURE	EFFEC-TIVITY	UNITS PER ASSY
	53 -	41A-44001-4	DRAIN INSTL - POWER PLANT		NP
	- 1	41A-44003-12	.PIPE ASSY - FUEL LOW PRESSURE SWITCH DRAIN		1
	- 2	MS35489-2	.GROMMET		1
	- 3	MS21919WDG6	.CLAMP		1
	- 4	MS21919WDG2	.CLAMP		1
R	- 5	MS35207-263	.SCREW		1
		AN960PD10L	.WASHER		1
		MS21042L3	.NUT		2
	- 6	41A-44003-6	.PIPE - COMPRESSOR BLEED DRAIN LH		1
	- 7	41A-44003-8	.PIPE - COMPRESSOR BLEED DRAIN RH		1
	- 8	41A-44001-26	.HOSE - DRAIN PIPE SECURING		4
	- 9	AN737TW24	.CLAMP		8
R	-10	MS21919WDG5	.CLAMP		3
R	-11	MS35207-263	.SCREW		2
		AN960PD10L	.WASHER		2
		MS21042L3	.NUT		2
	-12	AE7C13033G0280	.HOSE ASSY - OIL FILLER SCUPPER DRAIN (V69705)		2
	-13	AN737TW26	.CLAMP		1
R	-14	MS21919WDG9	.CLAMP		1
R	-15	MS35207-263	.BOLT		2
		AN960PD10L	.WASHER		2
		MS21042L3	.NUT		2
	-16	472	.TAPE - (V76381)		AR
	-17	41A-61405	.DUCT ASSY - COMPRESSOR BLEED EXIT (SEE SECTION 3)		REF
	-18	41A-44001-2	.DRAIN INSTL - ENGINE (SEE C-14-165-000/MY-000, PART 2A)		REF

FIGURE AND INDEX NUMBER	GROUP	POWER PLANT	EFFEC-TIVITY	UNITS PER ASSY
	MAJOR ASSEMBLY	POWER PLANT DRAINS		
	PART NUMBER	1 2 3 4 5 6 7 NOMENCLATURE		
		DELETED		

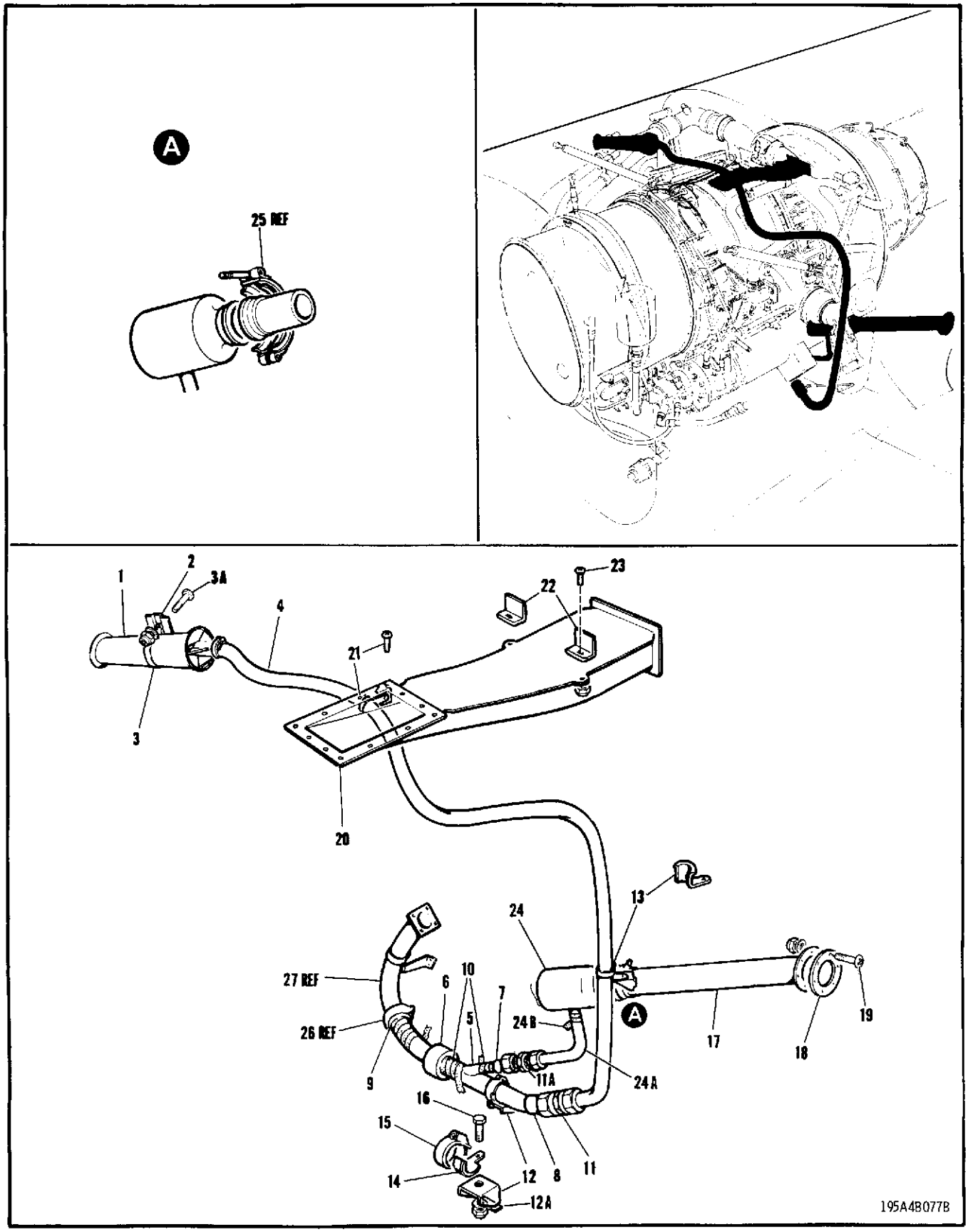

FIGURE 54 ZONE 1 & 2 & GENERATOR COOLING

FIGURE AND INDEX NUMBER	GROUP / MAJOR ASSEMBLY / PART NUMBER	POWER PLANT / ZONE 1 & 2 & GENERATOR COOLING / 1 2 3 4 5 6 7 NOMENCLATURE	EFFECTIVITY	UNITS PER ASSY
54 -	41A-99000	COOLING INSTL - ZONE 1 & 2 & GENERATOR (SEE SECTION 3)		NP
	41A-99200	.JET PUMP INSTL - ZONE 1 COOLING		NP
- 1	41A-99200-2	..WELD ASSY - ZONE 1 COOLING JET PUMP		1
- 2	41A-99200-10	..BRACKET - ZONE 1 COOLING JET PUMP		1
- 3	397-40	..CLAMP - (V00502)		1
- 3A	NAS501-3-6	..BOLT		1
	AN960C10L	..WASHER		1
	MS21042L3	..NUT		1
- 4	41A-99204-2	.DUCT ASSY - ZONE 1 COOLING		1
- 5	41A-99202-6	.DUCT ASSY - GENERATOR COOLING		1
- 6	10225-84	..JOINT - (V70628) (METAL FLEXIBLE WELDED) (IAW 41A-98102-6)		1
- 7	MS20819-8	..SLEEVE		1
	AN818-8	..NUT		1
- 8	MS20819-16	..SLEEVE		1
	AN818-16	..NUT		1
- 9	24538-125	..FLANGE - (V69705)		1
-10	7000G	..TAPE - (V36790)		AR
	7402	..TAPE - (V36790)		AR
-11	AN815-16	.UNION		1
-11A	AN815-8	.UNION	001-075	1
	AN837-8	.UNION	076-	1
-12	41A-99202-24	.BRACKET - SUPPORT		3
-12A	41A-99202-26	.PACKING - INSULATION		3
-13	41A-99201-4	.LINK - DUCT SUPPORT		2
-14	41A-99202-28	.LINK - DUCT SUPPORT		1
	41A-99202-44	.SHIM - (BETWEEN DUCT FLANGE & SKIN)		1
-15	AN737TW46	.CLAMP		4
-16	NAS501-4-4A	.BOLT		3
	AN960-416L	.WASHER		9
	MS21042L4	.NUT		3
-17	41A-99202-4	.DUCT ASSY - GENERATOR COOLING		1
-18	41A-99202-42	.RING - INSULATING		1
-19	NAS623-2-2	.SCREW		6
	AN960C8	.WASHER		6
	MS21042L08	.NUT		6
-20	41A-99206	.SCOOP & DUCT ASSY - ZONE 2		1
-21	NAS1202-2	.BOLT		12
	AN960C10L	.WASHER		10 •
-22	41A-99206-20	.BRACKET - ZONE 2 DUCT		2
R -23	MS35207-264	.SCREW		2
	MS21042L3	.NUT		2
-24	41A-99202-2	DUCT ASSY - GENERATOR COOLING (SEE FIG. 48)	001-075	1
	41A-99202-50	DUCT ASSY - GENERATOR COOLING (FOR SPARES ORDER 41A-99202-60)	076-	1
	41A-99202-60	DUCT ASSY - (SPARES FOR 41A-99202-50)	076-	
-24A	S21908-0900	.HOSE - (V78570)	076-	1
	AN815-8	.UNION	076-	1
	AN818-8	.NUT		1
	MS20819-8	.SLEEVE		1
-24B	7000G	.TAPE - (V36790) (AS REQUIRED)		AR
	7402	.TAPE - (V36790) (AS REQUIRED)		AR
-25	24540-150	CLAMP - (SEE FIG. 48)		REF
-26	24540-125	CLAMP - (SEE FIG. 48)		REF
-27	41A-42009-2	DUCT ASSY - ZONE 1 COOLING (SEE C-14-165-000/MY-000, PART 2A)		REF

-000-

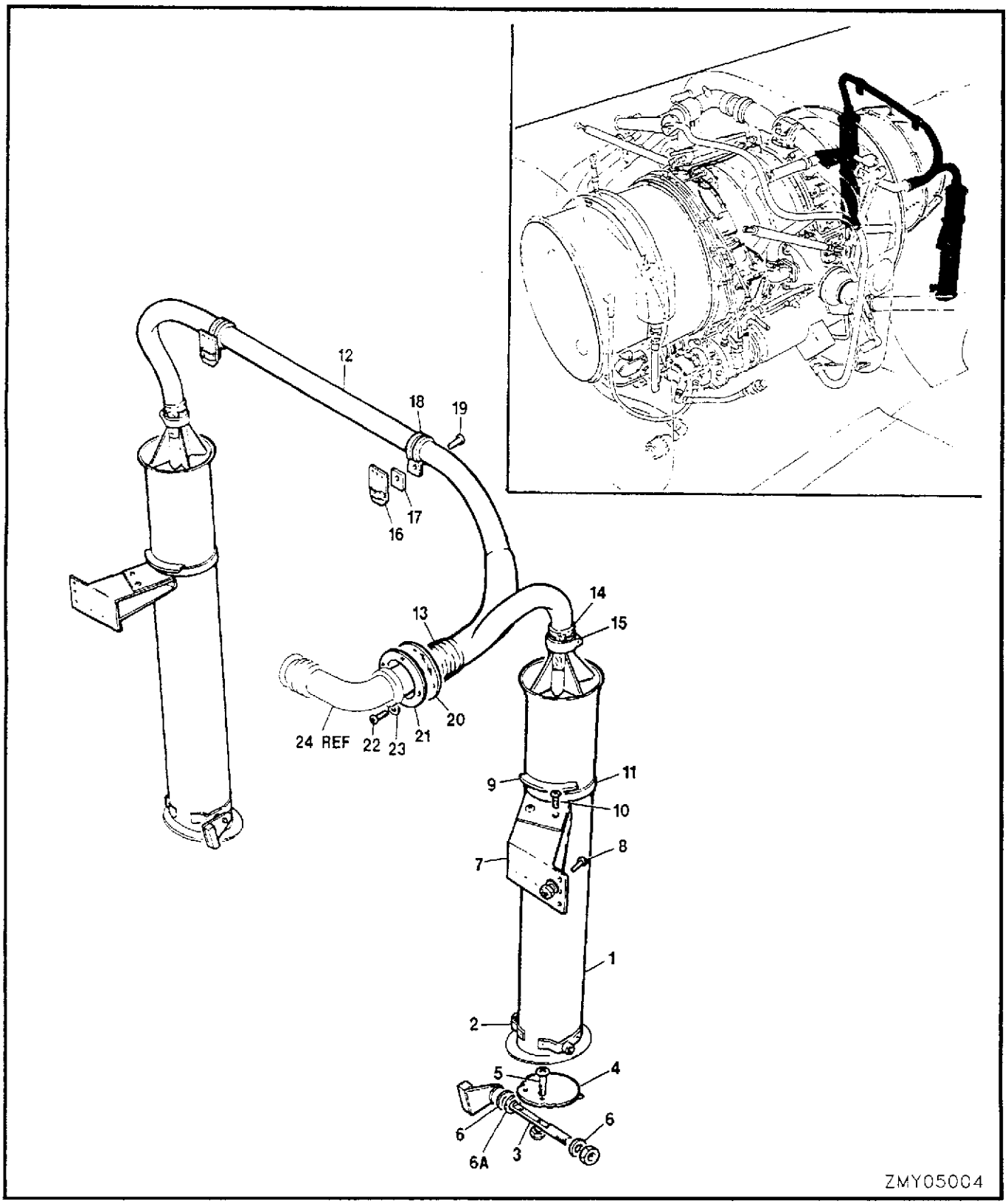

FIGURE 55 ZONE 2 COOLING JET PUMPS

FIGURE AND INDEX NUMBER	GROUP	POWER PLANT	EFFEC-TIVITY	UNITS PER ASSY
	MAJOR ASSEMBLY	ZONE 2 COOLING JET PUMPS		
	PART NUMBER	1 2 3 4 5 6 7 NOMENCLATURE		
55 -	41A-99005	JET PUMP INSTL - ZONE 2 COOLING (SEE SECTION 3)		NP
	41A-99209-2	.JET PUMP ASSY - ZONE 2 COOLING LH		1
	41A-99209-3	.JET PUMP ASSY - ZONE 2 COOLING RH		1
- 1	41A-99209-52	..TUBE ASSY - ZONE 2 COOLING JET PUMP LH		1
	41A-99209-53	..TUBE ASSY - ZONE 2 COOLING JET PUMP RH		1
- 2	41A-99209-12	..BRACKET ASSY - VALVE PLATE (RIVETED)		2
- 3	41A-99209-50	..LEVER ASSY - VALVE PLATE LH		1
	41A-99209-51	..LEVER ASSY - VALVE PLATE RH		1
- 4	41A-99209-4	..PLATE - VALVE LH		1
	41A-99209-5	..PLATE - VALVE RH		1
- 5	MS35206-228	..SCREW		2
	MS21042L06	..NUT		2
- 6	AN960C416L	..WASHER		AR
- 6A	S1236-416	..WASHER - (V88308)		AR
	MS21042L4	..NUT		1
- 7	41A-99209-18	.BRACKET ASSY - ZONE 2 COOLING JET PUMP LH		1
	41A-99209-19	.BRACKET ASSY - ZONE 2 COOLING JET PUMP RH		1
- 8	MS35207-262	.SCREW		6
	AN960D10L	.WASHER		6
	MS21042L3	.NUT		6
- 9	41A-99209-24	.CLIP - ZONE 2 COOLING JET PUMP		2
-10	AN520C10R8	.SCREW		4
-11	QS200M56S	.CLAMP - (V08484)		2
-12	41A-99209-26	.TUBE ASSY - ZONE 2 COOLING		1
-13	10225-68-1	..JOINT - (V70628) (METAL FLEXIBLE) (AS PER 41A-98102-8)		1
-14	88	.SHEET - (V75165) (ASBESTOS) (AS REQUIRED)		AR
-15	AN737RM46	.CLAMP		2
-16	41A-99209-40	.PLATE ASSY - SUPPORT		2
-17	41A-99209-44	.SPACER		2
-18	397-16	.CLAMP - (V00502)		2
-19	AN520C10R8	.SCREW		2
-20	AMS3783	.GASKET		1
-21	41A-99209-46	.RETAINER		1
-22	AN520C10R10	SCREW		4
-23	NAS43HT3-14	.SPACER		4
-24	41A-99208	ELBOW ASSY ZONE 2 COOLING FLEXIBLE (SEE FIG. 48)		REF

-000

SECTION 6

FUEL SYSTEM

TABLE OF CONTENTS

FIGURE	TITLE	PAGE
56	FUEL SYSTEM SCHEMATIC	6-02
57	FORWARD FUSELAGE FUEL SYSTEM & FORWARD CELL	6-04
58	CENTRE FUEL CELL	6-08
59	REAR FUEL CELL	6-12
60	FUEL COLLECTOR TANK & FEED SYSTEM	6-16
61	FUEL VENT SYSTEM	6-20
61A	FUSELAGE AUXILIARY FUEL SYSTEM	6-24
61B	AUX FUEL AIR PRESSURE REGULATOR PANEL	6-28
61C	AUXILIARY FUEL TANKS & DISCONNECTS	6-30
61D	FUSELAGE PYLONS - AUX FUEL TANKS	6-32

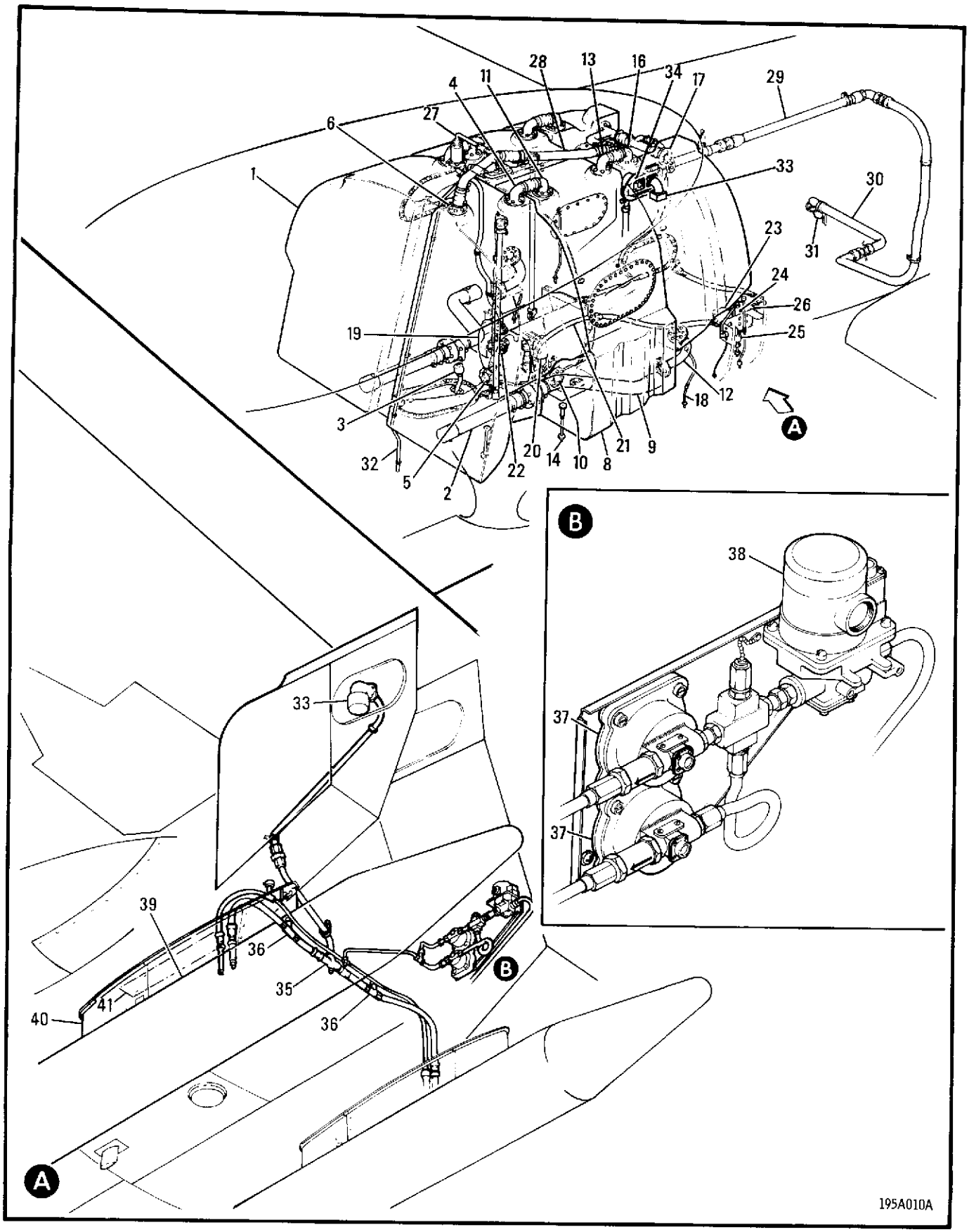

FIGURE 56 FUEL SYSTEM SCHEMATIC

FIGURE AND INDEX NUMBER	GROUP	FUEL SYSTEM	EFFEC-TIVITY	UNITS PER ASSY
	MAJOR ASSEMBLY	FUEL SYSTEM SCHEMATIC		
	PART NUMBER	1 2 3 4 5 6 7 NOMENCLATURE		
56 - 1	FCD60815	CELL - FUEL FORWARD (SEE FIG. 57)		REF
- 2	41A-65229	PIPE - FUEL FORWARD CELL BALANCE (SEE FIG. 57)		REF
- 3	FL203-1	SWITCH ASSY - (FUEL LOW LEVEL)(SEE FIG. 57)		REF
- 4	41A-65221	CONNECTOR - FUEL CELL VENT INTERCONNECT (SEE FIG. 57)		REF
- 5	41A-65210	CONNECTOR - COLLECTOR TANK FEED V-CLAMP (SEE FIG. 57)		REF
- 6	41A-65235	CONNECTOR - FUEL CELL VENT (SEE FIG. 57)		REF
- 7	41A-65209-36	TUBE - CAVITY DRAIN (SEE FIGURE 57)		REF
- 8	FCD60816	CELL - FUEL CENTRE (SEE FIG. 58)		REF
- 9	41A-65228	PIPE - CENTRE CELL BALANCE (SEE FIG. 58)		REF
-10	41A-65210	CONNECTOR - COLLECTOR TANK FEED V-CLAMP (SEE FIG. 58)		REF
-11	41A-65221	CONNECTOR - FUEL CELL VENT INTERCONNECT (SEE FIG. 58)		REF
-12	41A-65227	CONNECTOR - FUEL CENTRE TO REAR CELL (SEE FIG. 58)		REF
-13	41A-65221	CONNECTOR - FUEL CELL VENT INTERCONNECT (SEE FIG. 58)		REF
-14	41A-65201-75	TUBE - CAVITY DRAIN (SEE FIG. 58)		REF
-15	FCD60818	CELL - FUEL REAR (SEE FIG. 59)		REF
-16	41A-65221	CONNECTOR - FUEL CELL VENT INTERCONNECT (SEE FIG. 59)		REF
-17	AN801D16	CONNECTION - (SEE FIG. 59)		REF
-18	41A-65202-24	TUBE - CAVITY DRAIN (SEE FIG. 59)		REF
-19	41A-65601	TANK ASSY - FUEL (COLLECTOR) (SEE FIG. 60)		REF
-20	RR12060B	PUMP ASSY - FUEL BOOSTER (SEE FIG. 60)		REF
-21	41A-65616	LINE - BOOSTER PUMP FEED (SEE FIG. 60)		REF
-22	14-562-1	VALVE ASSY - FUEL SYS SWING CHECK (SEE FIG. 60)		REF
-23	AV16B1692D	VALVE ASSY - FUEL SHUT OFF (SEE FIG. 60)		REF
-24	700070	STRAINER ASSY - FUEL SYS (SEE FIG. 60)		REF
-25	475C62NXW	VALVE ASSY - FUEL DRAIN (SEE FIG. 60)		REF
-26	405-00217	NIPPLE - FUEL INLET QUICK DISCONNECT (SEE FIG. 60)		REF
-27	2630363	VALVE ASSY - COLLECTOR TANK VENT (SEE FIG. 61)		REF
-28	41A-65514-2	LINE ASSY - FUEL VENT (SEE FIG. 61)		REF
-29	601002-20D0240	HOSE ASSY - (FUEL VENT) (SEE FIG. 61)		REF
-30	41A-65516-4	MAST ASSY - UPPER (SEE FIG. 61)		REF
-31	41A-65516-2	MAST ASSY - LOWER (SEE FIG. 61)		REF
-32	41A-65514-8	LINE ASSY - FUEL VENT (SEE FIG. 61)		REF
-33	2660333M2	VALVE ASSY - FUEL LEVEL (SEE FIGURE 61A)		REF
-34	4P10-12	VALVE - THERMAL RELIEF (SEE FIGURE 61A)		REF
-35	41A-65208	MANIFOLD - AUX FUEL SYS (SEE FIGURE 61A)		REF
R -36	1G349-3	SWITCH - (V09049) PRESSURE (SEE FIGURE 61A)		REF
-37	392904-1	REGULATOR - AIR PRESSURE (SEE FIGURE 61B)		REF
-38	AV16E1274	VALVE - AIR SHUT-OFF (SEE FIGURE 61B)		REF
-39	118J000-(B)	TANK ASSY - EXTERNAL FUEL (SEE FIGURE 61C)		REF
-40	41G-27200-810	PYLON ASSY & INSTL (SEE FIGURE 61E)		REF
-41	41G-27305-24	RACK ASSY - BOMB (SEE FIGURE 61E)		REF

-OOO-

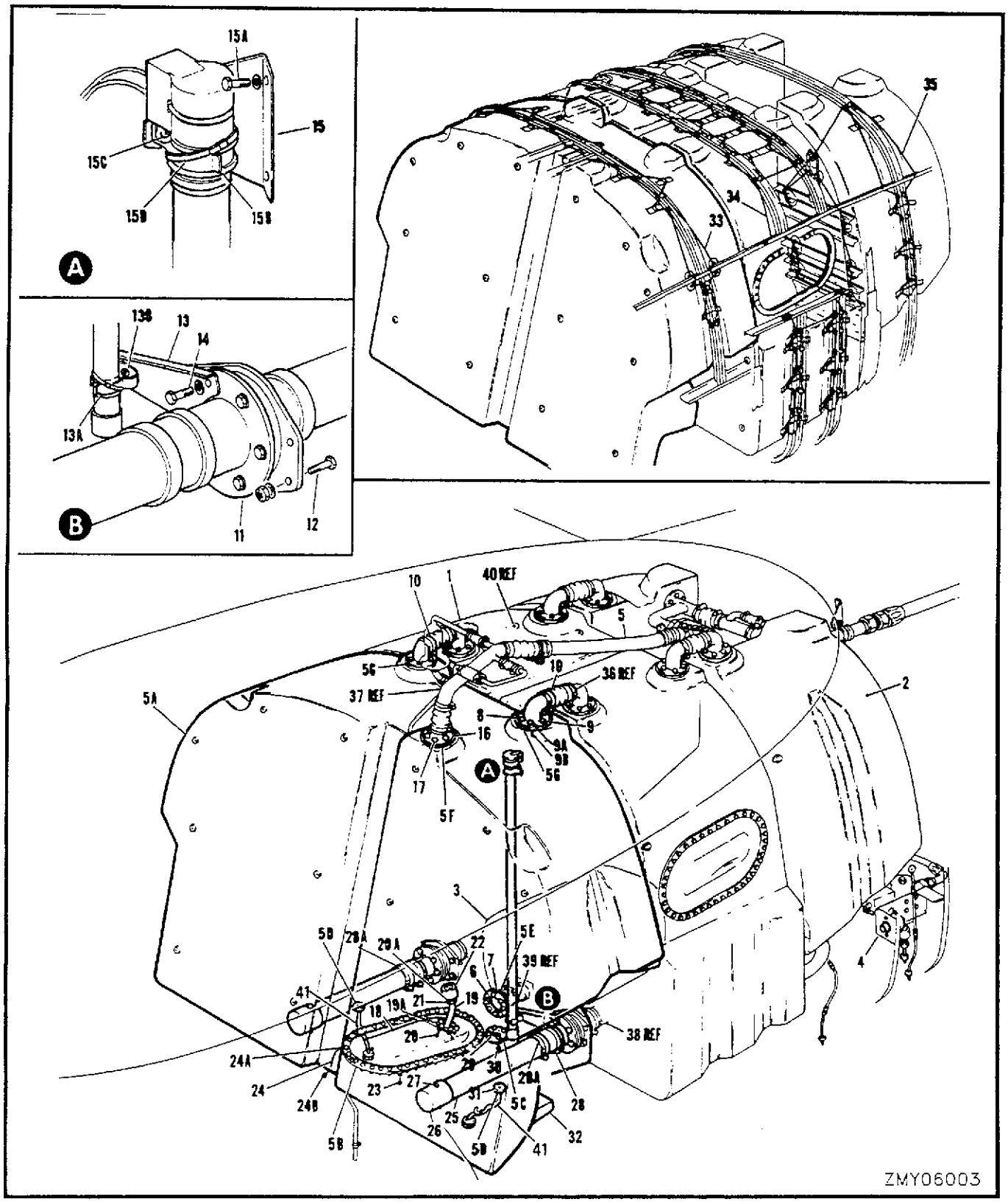

FIGURE 57 FORWARD FUSELAGE FUEL SYSTEM & FORWARD CELL

FIGURE AND INDEX NUMBER	GROUP	FUEL SYSTEM	EFFEC-TIVITY	UNITS PER ASSY
	MAJOR ASSEMBLY	FORWARD FUSELAGE FUEL SYSTEM & FORWARD CELL		
	PART NUMBER	1 2 3 4 5 6 7 NOMENCLATURE		
57 -	41A-65000-2	FUEL SYS INSTL - FUSELAGE (SEE SECTION 3)		NP
- 1	41A-65201	.CELL INSTL - FUEL CENTRE (SEE FIG. 58)		REF
- 2	41A-65202	.CELL INSTL - FUEL REAR (SEE FIG. 59)		REF
- 3	41A-65600	.TANK INSTL - FUEL SYS COLLECTOR (SEE FIG. 60)		REF
- 4	41A-65400	.FEED SYS INSTL - FUEL (SEE FIG. 60)		REF
- 5	41A-65501	.VENT SYS INSTL - FORWARD FUSELAGE FUEL (SEE FIG. 61)		REF
	41A-65200	.CELL INSTL - FUEL FORWARD		NP
- 5A	FCD60815	..CELL - (DOM) (FUEL FORWARD) (IAW 41A-65060)		1
- 5B	FCB25753	...GASKET - (DOM) (FUEL CELL)		2
- 5C	FCB25714	...GASKET - (DOM) (FUEL CELL)		1
- 5D	FCC60313	...SEAL ASSY - (DOM) (FUEL CELL)		4
- 5E	FCB25717	...GASKET - (DOM) (FUEL CELL)		1
- 5F	FCB25716	...GASKET - (DOM) (FUEL CELL)		2
- 5G	FCB25715	...GASKET - (DOM) (FUEL CELL)		4
- 6	41A-65210	..CONNECTOR - COLLECTOR TANK FEED V-CLAMP		1
	41A-65237	..SEAL - FUEL FORWARD CELL (CONNECTOR)		1
- 7	MS20073-04-04	..BOLT		8
	AN960D416	..WASHER		8
- 8	41A-65221	..CONNECTOR - FUEL CELL VENT INTERCONNECT		2
- 9	MS20073-04-05	..BOLT		12
	AN960D416	..WASHER		10
	S1228-8	..TAB - (V88308)		2
- 9A	MS25083-2BB5	..JUMPER ASSY		2
- 9B	MS35207-262	..SCREW		4
	AN960D10	..WASHER		4
	MS21042L3	..NUT		4
	S1296	..STRIP - (V88308)		2
-10	AN737TW46	..CLAMP		2
-11	41A-65226	..CONNECTOR ASSY - FUEL FORWARD CELL (BALANCE PIPE)		2
	41A-65226-1	...CONNECTOR - FUEL FWD CELL (BALANCE PIPE)		1
	MS21209F4-15	...INSERT		12
	MS29513-248	..PACKING		2
	41A-65200-40	..PACKING		2
R -12	NAS6204-6	..BOLT		8
	AN960D416	..WASHER		8
	MS21042L4	..NUT		8
-13	41A-65254	..BRACKET ASSY - PROBE LOWER SUPPORT		1
-13A	44-62799	..SPRING - PROBE MOUNTING		1
-13B	AN520C10R7	..SCREW		1
	AN960C10	..WASHER		1
-14	AN4-6A	..BOLT		12
	AN960D416	..WASHER		12
-15	41A-65253	..BRACKET ASSY - PROBE UPPER SUPPORT		1
-15A	NAS1003-10	..BOLT		2
	AN960C10	..WASHER		2
-15B	44-62799	..SPRING - PROBE MOUNTING		1
-15C	AN520C10R7	..SCREW		1
	AN960C10	..WASHER		1
-15D	MS17821-2-9	..STRAP - (IAW C-12-114-000/CF-237)		1
-16	41A-65235	..CONNECTOR - FUEL CELL VENT		1
-17	MS20073-04-05	..BOLT		6
	AN960D416	..WASHER		6
	41A-65225-2	..DOOR ASSY - FUEL FORWARD CELL ACCESS (I)		1
-18	41A-65225-6	...DOOR - FUEL FORWARD CELL ACCESS		1
-19	41A-65236	...ADAPTER - FUEL LEVEL SWITCH		1
-19A	41A-65241	...GASKET - FUEL LEVEL SWITCH ADAPTER		1
-20	NAS1103-6	...BOLT		6
	AN960-10L	...WASHER		6
-20A	41A-65260	...UNION - FUEL LEVEL SWITCH		1
-21	MS29512-6	...GASKET		2
-22	41A-50708	...SWITCH ASSY - (FUEL LOW LEVEL)		1

FIGURE AND INDEX NUMBER	GROUP	FUEL SYSTEM	EFFEC-TIVITY	UNITS PER ASSY
	MAJOR ASSEMBLY	FORWARD FUSELAGE FUEL SYSTEM & FORWARD CELL		
	PART NUMBER	1 2 3 4 5 6 7 NOMENCLATURE		
57 -23	MS20073-04-05	..BOLT		36
	AN960D416	..WASHER		34
	S1228-8	..TAB - (V88308)		2
-24	MS25083-2BB5	..JUMPER ASSY		2
R -24A	MS35207-262	..SCREW		3
-24B	NAS1103-3	..BOLT		1
	AN960D10	..WASHER		5
	MS21042L3	..NUT		4
-25	41A-65229	..PIPE - FUEL FORWARD CELL BALANCE		2
-26	41A-65245	..GUARD - FUEL CELL (BALANCE PIPE)		2
-27	NAS1003-58A	..BOLT		2
	NAS42DD6-200	..SPACER		2
	600-015-10-0S	..STAT-O-SEAL - (V45681)		4
	AN960PD10	..WASHER		4
-28	41A-65200-27	..HOSE		2
	S1296	..STRIP - (V88308)		2
-28A	AN737TW107	..CLAMP		4
-29	MS29528-6	..VALVE		1
		OR		
	2D100B	..DRAIN COCK - (V82879)		
	MS29512-6	..O-RING		1
-30	MS20073-04-03	..BOLT		4
	AN960D416L	..WASHER		4
-31	41A-65246	..GROMMET - CAVITY DRAIN CONNECTOR		2
-32	41A-65234	..BLOCK - FUEL FORWARD CELL LH		1
	41A-65234-1	..BLOCK - FUEL FORWARD CELL RH		1
	41A-65239	..BLOCK - FUEL FORWARD CELL LH		1
	41A-65239-1	..BLOCK - FUEL FORWARD CELL RH		1
	41A-65232	..BLOCK - FUEL FORWARD CELL LH		1
	41A-65232-1	..BLOCK - FUEL FORWARD CELL RH		1
	41A-65233	..BLOCK - FUEL FORWARD CELL LH		1
	41A-65233-1	..BLOCK - FUEL FORWARD CELL RH		1
	41A-65257	..BLOCK - FUEL FORWARD CELL		2
	JAN-P-127	..TAPE - TYPE 1 GRADE B		AR
	41A-65244	.LACING INSTL - FUEL CELL		NP
	41A-65244-2	..LACING INSTL - FUEL FORWARD CELL		NP
-33	MIL-C-5040	...CORD - NYLON		AR
	41A-65244-4	..LACING INSTL - FUEL CENTRE CELL LH		NP
	41A-65244-6	..LACING INSTL - FUEL CENTRE CELL RH		NP
-34	MIL-C-5040	...CORD - NYLON		AR
	41A-65244-8	..LACING INSTL - FUEL REAR CELL LH		NP
	41A-65244-9	..LACING INSTL - FUEL REAR CELL RH		NP
-35	MIL-C-5040	...CORD - NYLON		AR
-36	41A-65201-2	HOSE - FWD VENT CONNECTOR (SEE FIG. 58)		REF
-37	41A-65512	LINE ASSY - FUEL VENT (SEE FIG. 61)		REF
-38	41A-65201-6	HOSE - (BALANCE PIPE CONN) (SEE FIG. 58)		REF
-39	50175-200	CLAMP - (SEE FIG. 60)		REF
-40	FCC20458	PIN ASSY - (SEE SECTION 3)		REF
	K41A-60018 *	KIT - FUEL SYST INSTL AUX TANKS (SEE FIGURE 58)		REF
-41	41A-65209-36	.LINE ASSY - CAVITY DRAINLH		1
	41A-65209-34	.LINE ASSY - CAVITY DRAINRH		1
	AN737TW26	.CLAMP		2
	MS35489-11	.GROMMET		3
		-OOO-		
	*	IAW C-12-114-000/CD-031		

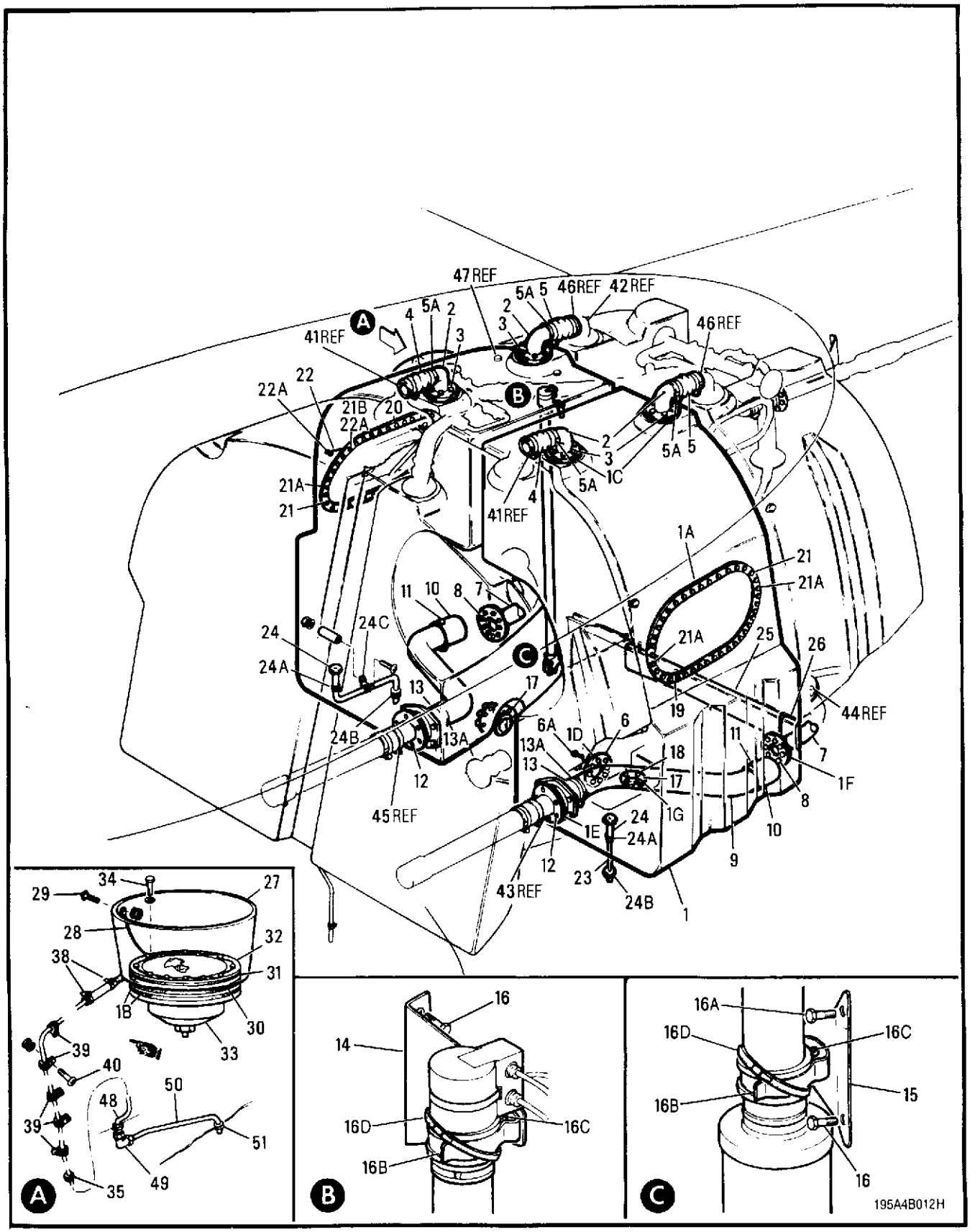

FIGURE 58 CENTRE FUEL CELL

FIGURE AND INDEX NUMBER	GROUP	FUEL SYSTEM	EFFEC-TIVITY	UNITS PER ASSY
	MAJOR ASSEMBLY	CENTRE FUEL CELL		
	PART NUMBER	1 2 3 4 5 6 7 NOMENCLATURE		
58 -	41A-65201	CELL INSTL - FUEL CENTRE LH (SEE FIG. 57)		NP
	41A-65201-1	CELL INSTL - FUEL CENTRE RH		NP
- 1	FCD60816	.CELL ASSY - (DOM) (FUEL CENTRE LH) (AS PER 41A-65061)		1
	FCD60817	.CELL ASSY - (DOM) (FUEL CENTRE RH) (AS PER 41A-65061-1)		1
- 1A	FCB25753	..GASKET - (DOM)		2
- 1B	FCB25722	..GASKET - (DOM) (RH CELL)		2
- 1C	FCB25715	..GASKET - (DOM)		8
- 1D	FCB25717	..GASKET - (DOM)		1
- 1E	FCC65217	..FITTING ASSY - (DOM)		1
- 1F	FCB25716	..GASKET - (DOM)		2
- 1G	FCB25714	..GASKET - (DOM)		1
- 2	41A-65221	.CONNECTOR - FUEL CELL VENT INTERCONNECT		2
- 3	MS20073-04-05	.BOLT		12
	AN960D416	.WASHER		12
- 4	41A-65201-2	.HOSE - FORWARD VENT CONNECTOR		1
- 5	41A-65201-4	.HOSE - REAR VENT CONNECT		1
		OR		
R	S1296	.STRIP - (V88308)		2
- 5A	AN737TW46	.CLAMP		2
- 6	41A-65210	.CONNECTOR - COLLECTOR TANK FEED V-CLAMP		1
	41A-65238	.SEAL - FUEL CENTRE CELL		1
- 6A	MS20073-04-03	.BOLT		8
	AN960D416	.WASHER		8
- 7	41A-65227	.CONNECTOR - FUEL CENTRE TO REAR CELL		1
- 8	MS20073-04-05	.BOLT		6
	AN960D416	.WASHER		6
- 9	41A-65228	.PIPE - FUEL CENTRE CELL BALANCE LH		1
	41A-65228-1	.PIPE - FUEL CENTRE CELL BALANCE RH		1
-10	41A-65245	.GUARD - FUEL CELL (BALANCE PIPE)		1
-11	NAS1003-58A	.BOLT		1
	NAS42DD6-200	.SPACER		1
	AN960PD10	.WASHER		2
R	600-015-10-0S	.STAT-O-SEAL - (V45681)		1
-12	AN4-6A	.BOLT		6
	AN960D416	.WASHER		6
	MS29513-248	.PACKING		1
-13	41A-65201-6	.HOSE		1
-13A	AN737TW107	.CLAMP		2
-14	41A-65255	.BRACKET ASSY - UPPER PROBE SUPPORT (STBD)		1
-15	41A-65256	.BRACKET ASSY - LOWER PROBE SUPPORT (STBD)		1
R	600-015-10-0S	.STAT-O-SEAL - (V45681) (STBD)		4
-16	NAS1003-11	.BOLT - (STBD)		3
-16A	NAS1003-13	.BOLT - (STBD)		1
	AN960C10	.WASHER - (STBD)		4
-16B	44-62799	.SPRING - PROBE MOUNTING (STBD)		2
-16C	AN520C10R7	.SCREW - (SPRING) (STBD)		2
	AN960C10	.WASHER - (STBD)		2
-16D	MS17821-2-9	.STRAP - (IAW C-12-114-000/CF-237)		2
-17	MS29528-6	.VALVE ASSY		1
		OR		
R	2D100B	.DRAIN COCK - (V82879)		
	MS29512-6	.GASKET		1
-18	MS20073-04-03	.BOLT		4
	AN960D416	.WASHER		4
-19	41A-65225-4	.DOOR - FUEL CELL ACCESS (PORT) (I)		1
-20	41A-65225-16	.DOOR - FUEL CELL ACCESS (STBD) (I)		1
-21	MS20073-04-04	.BOLT		36
	AN960D416	.WASHER		35
-21A	AN507-1032R6	.SCREW		2
R -21B	S1228-8	.TAB - (V88308)		1
-22	MS25083-2BB5	.JUMPER ASSY		1
-22A	MS35207-262	.SCREW		2
	AN960D10	.WASHER		2
	MS21042L3	.NUT		2

	FIGURE AND INDEX NUMBER	GROUP	FUEL SYSTEM	EFFEC-TIVITY	UNITS PER ASSY
		MAJOR ASSEMBLY	CENTRE FUEL CELL		
		PART NUMBER	1 2 3 4 5 6 7 NOMENCLATURE		
	58 -23	41A-65201-8	.TUBE - CAVITY DRAIN (LH)		1
		41A-65201-75	.TUBE - CAVITY DRAIN (RH)		1
	-24	41A-65246	.GROMMET - CAVITY DRAIN CONNECTOR		1
	-24A	AN737TW26	.CLAMP		1
	-24B	MS35489-11	.GROMMET		1
	-24C	316-6-6	.CLIP - (V00502) (RH TUBE)		1
R		MS35207-267	.SCREW - (RH TUBE)		1
		NAS43DD3-32	.SPACER - (RH TUBE)		1
		AN960D10	.WASHER - (RH TUBE)		1
		MS21042L3	.NUT - (RH TUBE)		1
	-25	41A-65230-2	.BLOCK - FUEL CENTRE CELL LH		1
		41A-65230-3	.BLOCK - FUEL CENTRE CELL RH		1
	-26	41A-65230-4	.BLOCK - FUEL CENTRE CELL LH		1
		41A-65230-5	.BLOCK - FUEL CENTRE CELL RH		1
		41A-65231	.BLOCK - FUEL CENTRE CELL LH		1
		41A-65231-1	.BLOCK - FUEL CENTRE CELL RH		1
		41A-65259	.BLOCK - FUEL CENTRE CELL LH		1
		41A-65259-1	.BLOCK - FUEL CENTRE CELL RH		1
		JAN-P-127	.TAPE - TYPE 1 GRADE B		AR
		41A-65243	FILLER INSTL - FUEL (SEE SECTION 3)		NP
	-27	41A-65243-2	.FILLER ASSY - FUEL		1
	-28	MS25083-2BC4	.JUMPER ASSY		1
R	-29	MS35207-263	.SCREW		1
		AN960-10	.WASHER		1
		MS21042L3	.NUT		1
	-30	41A-65243-50	.GASKET		1
	-31	41A-65261	.SPACER - CENTRE TANK FILLER CAP RING		1
		41A-65243-14	.CAP & ADAPTER ASSY - FUEL FILLER		1
	-32	3518	..ADAPTER - (V99231) (FUEL FILLER)		1
	-33	41A-65243-28	..CAP - FUEL FILLER		1
		MS29513-12	...O-RING		1
		MS29513-339	...O-RING		1
	-34	MS20073-04-17	.BOLT		12
		AN960D416	.WASHER		11
	-35	MS35489-11	.GROMMET		1
	-36		DELETED		
	-37		DELETED		
	-38	AN737TW26	.CLAMP		2
R	-39	MS21919WDG6	.CLAMP		5
R	-40	MS35207-263	.SCREW		5
		AN960-10	.WASHER		5
		MS21042L3	.NUT		3
	-41	AN737TW46	CLAMP - (SEE FIG. 57)		REF
	-42	41A-65221	CONNECTOR - FUEL CELL VENT INTERCONNECT (SEE FIG. 59)		REF
	-43	41A-65226	CONNECTOR ASSY - FUEL FORWARD CELL (BALANCE PIPE) (SEE FIG. 57)		REF
	-44	MS20073-04-04	BOLT - (SEE FIG. 59)		REF
	-45	AN737TW107	CLAMP - (SEE FIG. 57)		REF
	-46	AN737TW46	CLAMP - (SEE FIG. 59)		REF
	-47	FCC20458	PIN ASSY - (SEE SECTION 3)		REF
		K41A-60018 *	KIT - FUEL SYSTEM INSTL AUX TANKS (SEE FIGURE 61A)		REF
	-48	K41A-60018-127	.DRAIN PIPE ASSY		1
		MS21922-6	.SLEEVE		1
		MS21921-6D	.NUT		1
	-49	MS21904D6	.ELBOW		1
	-50	41A-65209-38	.LINE ASSY - FUEL FILLER DRAIN		1
	-51	MS35489-11	.GROMMET		1
			-OOO-		
		*	IAW C-12-114-000/CD-031		

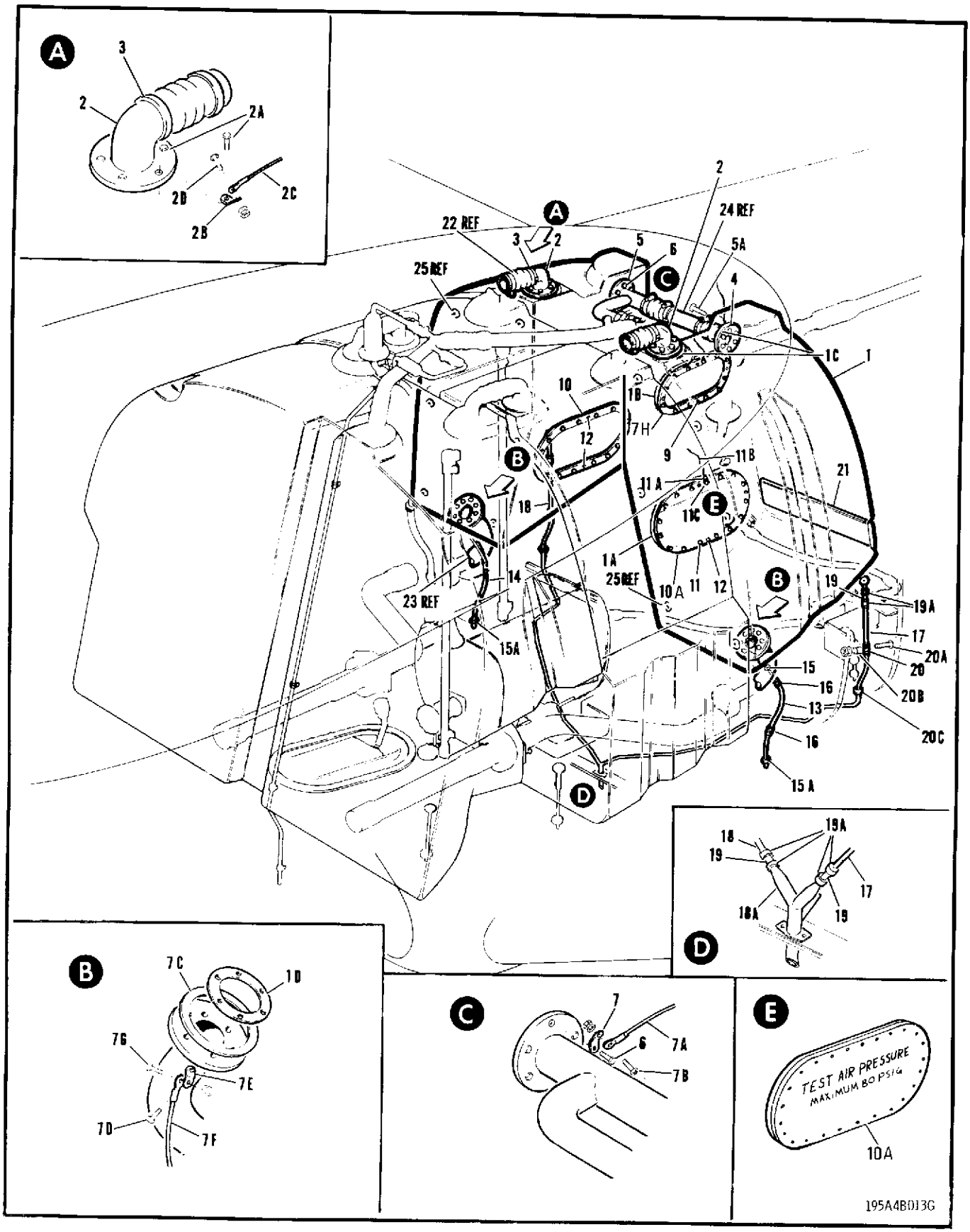

FIGURE 59 REAR FUEL CELL

	FIGURE AND INDEX NUMBER	GROUP		FUEL SYSTEM	EFFEC-TIVITY	UNITS PER ASSY
		MAJOR ASSEMBLY		REAR FUEL CELL		
		PART NUMBER		1 2 3 4 5 6 7 NOMENCLATURE		
	59 -	41A-65202		CELL INSTL - FUEL REAR LH (SEE FIG. 57)		NP
		41A-65202-1		CELL INSTL - FUEL REAR RH		NP
	- 1	FCD60818		.CELL - (DOM) (FUEL REAR LH) (IAW 41A-65062)		1
		FCD60819		.CELL - (DOM) (FUEL REAR RH) (IAW 41A-65062-1)		1
	- 1A	FCB25752		..GASKET - (DOM) (FUEL CELL)		2
	- 1B	FCA25751		..GASKET - (DOM) (FUEL CELL)		2
	- 1C	FCB25715		..GASKET - (DOM) (FUEL CELL)		4
	- 1D	FCB25716		..GASKET - (DOM) (FUEL CELL)		1
	- 2	41A-65221		.CONNECTOR - FUEL CELL VENT INTERCONNECT		1
	- 2A	MS20073-04-04		.BOLT		6
		AN960D416		.WASHER		5
	- 2B	S1228-8		.TAB - (V88308)		1
	- 2C	MS25083-2BB8		.JUMPER ASSY		1
R	- 2D	MS35207-262		.SCREW		2
		AN960D10		.WASHER		2
		MS21042L3		.NUT		2
		S1296		.STRIP - (V88308)		1
	- 3	AN737TW46		.CLAMP		1
	- 4	AN801D16		.CONNECTION - (PORT)		1
	- 5	41A-65222		.CONNECTOR ASSY - FUEL CELL (STBD)		1
		MS20819-20		..SLEEVE		1
		AN818-20D		..NUT		1
	- 5A	MS20073-04-05		.BOLT - (PORT)		6
	- 6	MS20073-04-04		.BOLT - (STBD)		6
		AN960D416		.WASHER		5
	- 7	S1228-8		.TAB - (V88308)		1
	- 7A	MS25083-2BB8		.JUMPER ASSY		1
R	- 7B	MS35207-262		.SCREW		2
		AN960D10		.WASHER		2
		MS21042L3		.NUT		2
	- 7C	41A-65240		.SEAL - FUEL REAR CELL		1
	- 7D	MS20073-04-05		.BOLT		6
		AN960D416		.WASHER		5
	- 7E	S1228-8		.TAB - (V88308)		1
	- 7F	MS25083-2BB6		.JUMPER ASSY		1
R	- 7G	MS35207-262		.SCREW		2
		AN960D10		.WASHER		2
		MS21042L3		.NUT		2
	- 7H	41A-65211-800	*	.DOOR ASSY - FUEL CELL ACCESS (SEE FIGURE 61A)		REF
	- 8			DELETED		
	- 8A			DELETED		
	- 8B			DELETED		
	- 8C			DELETED		
	- 9	MS24693-270		.SCREW - (CELL FITTING TO STRUCT PORT)		2
	-10	41A-65213		.DOOR - REAR CELL LH ACCESS (I)		1
	-10A	41A-65213	*	.DOOR - REAR CELL RH ACCESS (I) (MODIFIED)		1
	-11	MS20073-04-03		.BOLT		24
		AN960D416		.WASHER		23
	-11A	S1228-8		.TAB - (V88308)		1
	-11B	MS25083-2BB8		.JUMPER ASSY		1
R	-11C	MS35207-262		.SCREW		2
		AN960D10		.WASHER		2
		MS21042L3		.NUT		2
	-12	MS24693-270		.SCREW		2
	-13	41A-65209-32	*	.TUBE - CAVITY DRAIN LH (FUS STA 259)		1
	-14	41A-65209-30	*	.TUBE - CAVITY DRAIN RH (FUS STA 259)		1
			*	IAW C-12-114-000/CD-031		

	FIGURE AND INDEX NUMBER	GROUP	FUEL SYSTEM	EFFEC-TIVITY	UNITS PER ASSY
		MAJOR ASSEMBLY	REAR FUEL CELL		
		PART NUMBER	1 2 3 4 5 6 7 NOMENCLATURE		
	59 -15	41A-65246	.GROMMET - CAVITY DRAIN CONNECTOR		1
		AN737TW26	.CLAMP		1
	-15A	MS35489-11	.GROMMET		1
	-16	755-6-2-8 *	.CLIP - (V00502)		1
R		MS35207-262	.SCREW		1
		AN960D10	.WASHER		1
		MS21042L3	.NUT		1
	-17	41A-65202-46	.TUBE - VENT LH (FUS STA 277)		1
	-18	41A-65202-47	.TUBE - VENT RH (FUS STA 277)		1
	-18A	41A-65202-40	.TUBE ASSY - VENT (LH) (FUS STA 277)		1
	-19	41A-65202-31	.HOSE		2
	-19A	AN737TW26	.CLAMP		4
	-20	316-6-6	.CLIP - (V00502) (2 ON PORT 1 ON STBD)		2
R	-20A	MS35207-267	.SCREW		1
	-20B	NAS43DD3-32	.SPACER		1
		AN960D10	.WASHER		1
		MS21042L3	.NUT		1
	-20C	MS35489-11	.GROMMET		1
	-21	41A-65212	.BLOCK - FUEL REAR CELL LH (CEMENTED TO STRUCTURE AT BOTTOM REAR)		1
		41A-65212-1	.BLOCK - FUEL REAR CELL RH (CEMENTED TO STRUCTURE AT BOTTOM REAR)		1
		41A-65202-60	.TAPE - (1 IN. WIDE)		AR
		41A-65202-62	.TAPE - (2 IN. WIDE)		AR
	-22	41A-65201-4	HOSE - REAR VENT CONNECTOR (SEE FIG. 58)		REF
	-23	41A-65227	CONNECTOR - FUEL CENTRE TO REAR CELL (SEE FIG. 58)		REF
	-24	41A-65511	LINE ASSY - FUEL VENT (SEE FIG. 61)		REF
	-25	FCC20458	PIN ASSY - (SEE SECTION 3)		REF
			-000-		
		*	AS PER C-12-114-000/CD-031		

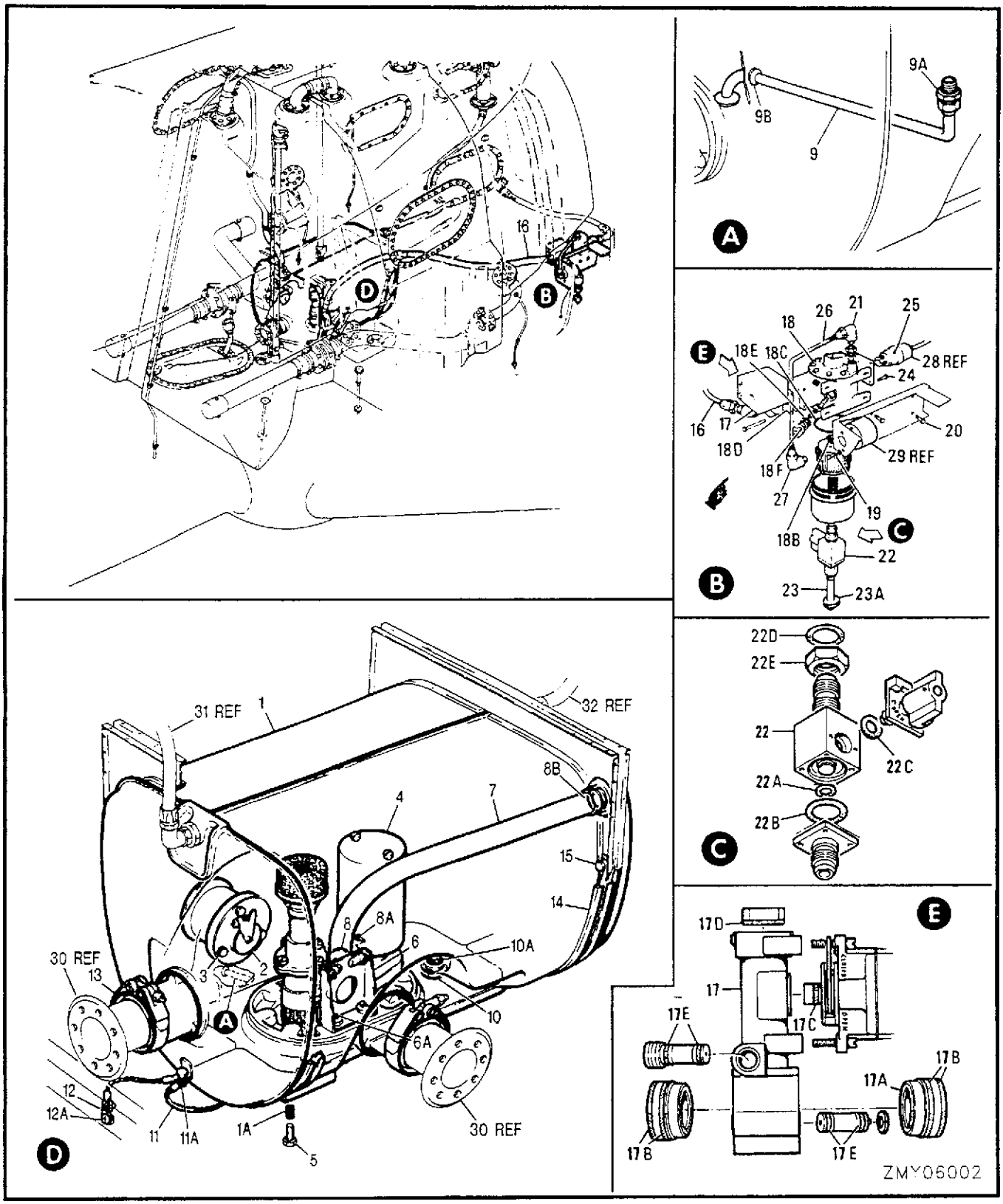

FIGURE 60 FUEL COLLECTOR TANK & FEED SYSTEM

FIGURE AND INDEX NUMBER	GROUP	FUEL SYSTEM	EFFEC-TIVITY	UNITS PER ASSY
	MAJOR ASSEMBLY	FUEL COLLECTOR TANK & FEED SYSTEM		
	PART NUMBER	1 2 3 4 5 6 7 NOMENCLATURE		
60 -	41A-65600	TANK INSTL - FUEL SYS COLLECTOR (SEE FIG. 57)		NP
	41A-65600-2	.TANK ASSY - FUEL COLLECT		1
		OR		
- 1	41A-65601	..TANK ASSY - FUEL (WELDED)		1
	41A-65602	...SUMP ASSY - TANK COLLECTOR (WELDED)		1
- 1A	3591-4CN X 3/8	....INSERT - (V26344)		12
- 2	14-562-1	..VALVE ASSY - (V92003) (FUEL SYS SWING CHECK) (IAW 41A-65050)		3
	SEAL	...BONDED RUBBER (SPEC STM-R 1000)		1
- 3	AN3C3A	..BOLT		9
- 4	RR12060R	..PUMP - (V31435) (FUEL BOOSTER) (IAW 41A-65053-2) (FOR BRKDN SEE C-13-975-000/MS-000)		1
- 5	MS20073-04-05	..BOLT		12
	2030-015	..RING - (V45681) (SEAL)		1
	AN960PD416L	..WASHER		11
	S1228-5	..TAB - (V88308)		1
- 6	41A-65617	..BRACKET ASSY - BOOSTER PUMP FEED LINE		1
- 6A	AN507C1032R20	..SCREW		2
	AN960C10L	..WASHER		2
- 7	41A-65616	..LINE - BOOSTER PUMP FEED		1
	MS29513-118	..PACKING		2
- 8	453-16-10	..CLIP - (V00502)		1
- 8A	AN520C10R10	..SCREW		2
	AN960C10L	..WASHER		2
- 8B	MS29513-120	..PACKING		2
- 9	41A-65618-2	..LINE ASSY - (BOOST PUMP DRAIN)		1
- 9A	AN815-4D	..UNION		1
	MS29512-4	..GASKET		1
- 9B	MS35489-6S	..GROMMET		1
-10	230-20060	..VALVE - (V96313) (FUEL DRAIN)		1
-10A	MS29513-9	...PACKING		1
	MS29512-10	..GASKET		1
-11	MS25083-2BB8	..JUMPER ASSY		2
-11A	AN520C10R10	..SCREW		2
	AN960C10L	..WASHER		2
	MS21043-3	..NUT		2
-12	S1228-5	.TAB - (V88308)		1
-12A	AN520C10R10	.SCREW		2
	AN960C10L	.WASHER		2
	MS21043-3	.NUT		2
-13	50175-200	.CLAMP - (V75829)		3
	MS29513-137	.PACKING		3
-14	2366-63-1078SH	.STRAP & T-BOLT ASSY - (V75829) (2366-63-1078SH WITH 2600-32 MAY BE PURCHASED AS 57989-10-1078SH (V69705))		2
	57989-10-1078SH	.STRAP, T-BOLT & CUSHION ASSY FOR 2366-63-1078SH TOG ETHER WITH 2600-32 (V75829)		
	2362-63-1078	.STRAP & TRUNNION ASSY - (V75829) (2362-63-1078 WITH 2600-32 MAY BE PURCHASED AS 57989-12-1078 (V69705))		2
	57989-12-1078	.STRAP, TRUNNION & CUSHION ASSY FOR 2362-63-1078 TOGETHER WITH 2600-32 (V75829)		
	2600-32	.CUSHION - (V00502) (GRADE A TYPE 2)		4
R -15	NAS6204-10D	.BOLT		4
	AN960PD416L	.WASHER		8
	AN320-4	.NUT		4
	MS24665-134	.COTTER PIN		4

FIGURE AND INDEX NUMBER	GROUP		FUEL SYSTEM	EFFEC-TIVITY	UNITS PER ASSY
	MAJOR ASSEMBLY		FUEL COLLECTOR TANK & FEED SYSTEM		
	PART NUMBER		1 2 3 4 5 6 7 NOMENCLATURE		
60 -	41A-65400-50		FEED SYS INSTL - FUEL (SEE FIG. 57)		NP
-16	AE7010130M0220	*	.HOSE ASSY		1
-17	AV16B1692D		.VALVE ASSY - (V11065) (FUEL SHUT OFF) (IAW 41A-65054) (FOR BRKDN SEE C-13-D51-000/MS-000)		1
-18	700070		.STRAINER ASSY - (V35076) (FUEL SYS) (IAW 41A-65057) (FOR BRKDN SEE C-13-142-000/MY-000)		1
-18B	MS29513-025		..PACKING		1
-18C	MS29513-235		..PACKING		1
-18D	7O096		..HEAD ASSY - (V35076)		1
-18E	MS29513UDN910		..PACKING		1
-18F	MS29513UDN024		..PACKING		1
-19	AN3CH20A		.BOLT		4
	AN960PD10L		.WASHER		4
R -20	NAS6204-4		.BOLT		4
	AN960PD416		.WASHER		4
	MS21042L4		.NUT		4
-21	AN833-4D		.ELBOW		1
	MS29512-4		.GASKET		1
	AN924-4D		.NUT		1
-22	475C62NXW		.VALVE ASSY - (V91511) (FUEL DRAIN) (IAW 41A-65067)		1
-22A	MS29513-8		..PACKING		1
-22B	MS29513-115		..PACKING		1
-22C	MS29512-5		..PACKING		1
	MS29512-6		.GASKET		1
	AN924-6D		.NUT		1
-22D	MS29512-6		.GASKET		1
-22E	AN924-6D		.NUT		1
-23	41A-65400-30		.LINE - STRAINER DRAIN		1
	AN818-6D		.NUT		1
	MS20819-6		.SLEEVE		1
-23A	MS35489-12		.GROMMET		1
-24	NAS623-3-2		.SCREW		4
	AN960PD10L		.WASHER		4
	MS21042L3		.NUT		4
-25	405-00217		.NIPPLE - (V96313) (FUEL INLET QUICK DISCONN) (IAW 41A-65055-4)		1
	M83248/2-123		.PACKING		1
	MS29512-16		.GASKET		1
	41A-42101		ELECTRICAL & ELECTRONIC EQUIP. INSTL - CENTRE FUSELAGE (SEE SECTION 12)		REF
-26	AE7010000E0120	*	.HOSE ASSY - (V69705) (FUEL STRAINER TO LOW PRESSURE SWITCH)		1
-27	AN833-4D		.ELBOW		1
	MS29512-4		.GASKET		1
	AN924-4D		.NUT		1
-28	405-00216		SOCKET - FUEL INLET QUICK DISCONNECT (SEE SECTION 5)		REF
-29	21SN41-105	***	SWITCH ASSY - FUEL PRESS. (SEE SECTION 12)		REF
-30	41A-65210		CONNECTOR - (SEE FIG. 57 & 58)		REF
-31	CA3193JJJ0376		HOSE ASSY - FUEL COLLECTOR TANK VENT FWD (SEE FIG. 61)		REF
-32	AE705363-1	**	HOSE ASSY - FUEL COLLECTOR TANK VENT REAR (SEE FIG. 61)		REF
			-OOO-		
		*	IAW C-12-114-000/CF-411		
		**	IAW C-12-114-000/CF-431		
		***	IAW C-12-114-OOO/CF-505		

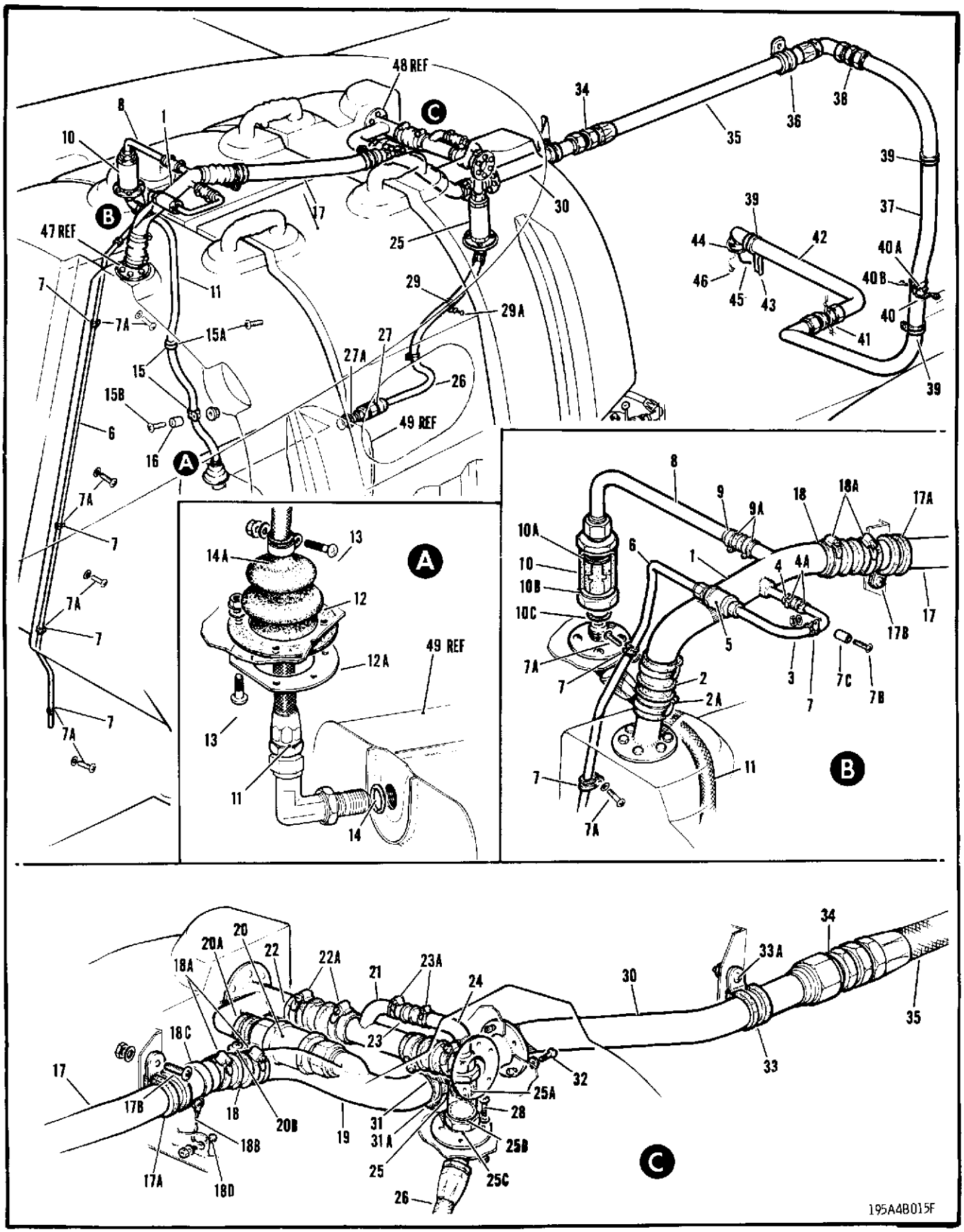

FIGURE 61 FUEL VENT SYSTEM

	FIGURE AND INDEX NUMBER	GROUP		FUEL SYSTEM	EFFEC-TIVITY	UNITS PER ASSY
		MAJOR ASSEMBLY		FUEL VENT SYSTEM		
		PART NUMBER		1 2 3 4 5 6 7 NOMENCLATURE		
	61 -	41A-65501		VENT SYS INSTL - FORWARD FUSELAGE FUEL (SEE FIG. 57)		NP
	- 1	41A-65512		.LINE ASSY - FUEL VENT		1
	- 2	41A-65501-54		.HOSE - FUEL VENT		1
	- 2A	AN737TW58		.CLAMP		2
	- 3	41A-65514-6		.LINE ASSY - FUEL VENT		1
	- 4	41A-65501-24		.HOSE - FUEL VENT		1
	- 4A	AN737TW22		.CLAMP		2
	- 5	MS28885-4		.VALVE ASSY		1
	- 6	41A-65514-8		.LINE ASSY - FUEL VENT		1
	- 7	316E4-6		.CLIP - (V00502)		7
R	- 7A	MS35206-246		.SCREW		6
		AN960PD8L		.WASHER		6
R	- 7B	MS35206-247		.SCREW		1
	- 7C	NAS43DD3-32		.SPACER		1
		AN960PD8L		.WASHER		1
		MS21042L08		.NUT		1
	- 8	41A-65514-4		.LINE ASSY - FUEL VENT		1
	- 9	41A-65501-52		.HOSE - FUEL VENT		1
	- 9A	AN737TW34		.CLAMP		2
		2630269		.VALVE ASSY - (V92003) (COLLECTOR TANK VENT) (IAW 41A-65056-800) (FOR SPARES ORDER 2630363)	001-010	1
	-10	2630363		.VALVE ASSY - (V92003) (COLLECTOR TANK VENT) (IAW 41A-65056-801) (ALSO SPARE FOR 2630269)	011-	1
	-10A	2633496		..RING - (V92003)		2
	-10B	F61A1718-9		..GASKET - (V92003)		1
	-10C	MS29512-10		.GASKET		1
	-11	CA3193JJJ0376		.HOSE ASSY - (V69705) FUEL COLLECTOR TANK VENT FWD		1
		AN833-10D	*	.ELBOW		1
		AN924-10D	*	.NUT		1
		MS29512-10	*	.GASKET		1
	-12	41A-65064-6		.BELLOWS - (DOM) (COLLECTOR TANK VENT FWD)		1
	-12A	41A-65501-56		.RETAINER - BELLOWS		1
R	-13	MS35207-264		.SCREW		8
		AN960PD10L		.WASHER		8
		MS21042L3		.NUT		8
	-14	MS29512-10		.GASKET		1
	-14A	AN735D16		.CLAMP		1
	-15	755-13-2-8		.CLIP - (V00502)		2
R	-15A	MS35207-264		.SCREW		1
		AN960PD10L		.WASHER		1
R	-15B	MS35207-266		.SCREW		1
	-16	NAS43DD3-24		.SPACER		1
		MS21042L3		.NUT		1
	-17	41A-65514-2		.LINE ASSY - FUEL VENT		1
	-17A	316-20-8		.CLIP - (V00502)		2
R	-17B	MS35207-264		.SCREW		2
		AN960PD10L		.WASHER		2
		MS21043-3		.NUT		2
			*	IAW C-12-114-000/CF-352		

	FIGURE AND INDEX NUMBER	GROUP	FUEL SYSTEM	EFFEC-TIVITY	UNITS PER ASSY
		MAJOR ASSEMBLY	FUEL VENT SYSTEM		
		PART NUMBER	1 2 3 4 5 6 7 NOMENCLATURE		
	61 -18	41A-65501-54	.HOSE - FUEL VENT		2
	-18A	AN737TW58	.CLAMP		4
	-18B	MS25083-2BB6	.JUMPER ASSY		1
	-18C	AN735D20	.CLAMP		1
R	-18D	MS35207-264	.SCREW		2
		AN960PD10L	.WASHER		2
		MS21042L3	.NUT		2
	-19	41A-65513	.LINE ASSY - FUEL VENT		1
	-20	MS28885-20	.VALVE ASSY		1
	-20A	316-20-8	.CLIP - (V00502)		1
R	-20B	MS35207-264	.SCREW		1
		AN960PD10L	.WASHER		1
		MS21043-3	.NUT		1
	-21	41A-65511	.LINE ASSY - FUEL VENT		1
	-22	41A-65501-26	.HOSE - FUEL VENT		2
	-22A	AN737TW46	.CLAMP		4
	-23	41A-65501-52	.HOSE - FUEL VENT		1
	-23A	AN737TW34	.CLAMP		2
	-24	41A-65514-10	.LINE ASSY - FUEL VENT		1
		2630269	.VALVE ASSY - (V9203) (COLLECTOR TANK VENT) (IAW 41A-65056-800) (FOR SPARES ORDER 2630363)	001-010	1
	-25	2630363	.VALVE ASSY - (V92003) (COLLECTOR TANK VENT) (IAW 41A-65056-801) (ALSO SPARE FOR 2630269)	011-	1
	-25A	2633496	..RING - (V92003)		2
	-25B	F61A1718-9	..GASKET - (V92003)		1
	-25C	MS29512-10	.GASKET		1
	-26	AE705363-1	.HOSE ASSY - FUEL COLLECTOR TANK VENT REAR (IAW C-12-114-000/CF-431)		1
	-27	AN815-10D	.REDUCER		2
	-27A	MS29512-10	.GASKET		1
R	-28	MS35207-264	.SCREW		4
		AN960PD10L	.WASHER		4
		MS21042L3	.NUT		4
	-29	316-13-8	.CLIP - (V00502)		2
R	-29A	MS35207-264	.SCREW		2
		AN960PD10L	.WASHER		2
	-30	41A-65515	.LINE ASSY - FUEL VENT		1
	-31	41A-65501-54	.HOSE - FUEL VENT		1
	-31A	AN737TW58	.CLAMP		2
R	-32	MS35207-264	.SCREW		4
		AN960PD10L	.WASHER		4
	-33	755SS20-2-8SF	.CLIP - (V00502)		1
R	-33A	MS35207-264	.SCREW		1
		AN960PD10L	.WASHER		1
		MS21043-3	.NUT		1
	-34	AN815-20D	.UNION		1
		41A-65000-4	VENT SYS INSTL - REAR FUSELAGE FUEL (SEE SECTION 3)		NP
		41A-65502	.VENT SYS INSTL - REAR FUSELAGE FUEL (MOD IAW C-12-114-000/CF-374)		NP
	-35	AE7010200N0240	..HOSE ASSY - (V69705) (IAW C-12-114-000/CF-411)		1

FIGURE AND INDEX NUMBER	GROUP	FUEL SYSTEM	EFFEC-TIVITY	UNITS PER ASSY
	MAJOR ASSEMBLY	FUEL VENT SYSTEM		
	PART NUMBER	1 2 3 4 5 6 7 NOMENCLATURE		
61 -36	755SS23-2-8SF	..CLIP - (V00502)		1
-37	41A-65502-22	..TUBE ASSY - (WELDED)		1
-38	AN815-20D	..UNION		1
-39	755SS20-2-8SF	..CLIP - (V00502)		3
-40	MS25083-2BB6	..JUMPER ASSY		1
-40A	AN735D20	..CLAMP		1
R -40B	MS35207-264	..SCREW		5
	AN960PD10L	..WASHER		5
	MS21042L3	..NUT		5
-41	AN832-20D	..UNION - BULKHEAD		1
	AN924-20D	..NUT		1
-42	41A-65516-4 *	..MAST ASSY - UPPER		1
-43	41A-65516-28	..BRACKET ASSY		1
-44	41A-65516-12	..GASKET		1
	41A-65516-32	..GASKET		1
-45	41A-65516-2 *	..MAST ASSY - LOWER (WELDED)		1
-46	NAS6203-4 *	..SCREW		8
-47	41A-65235	CONNECTOR - FUEL CELL VENT (SEE FIG. 57)		REF
-48	41A-65222	CONNECTOR ASSY - FUEL CELL (SEE FIG. 59)		REF
-49	41A-65601	TANK ASSY - FUEL (WELDED) (SEE FIG. 60)		REF
		-OOO-		
	*	IAW C-12-114-000/CF-419		

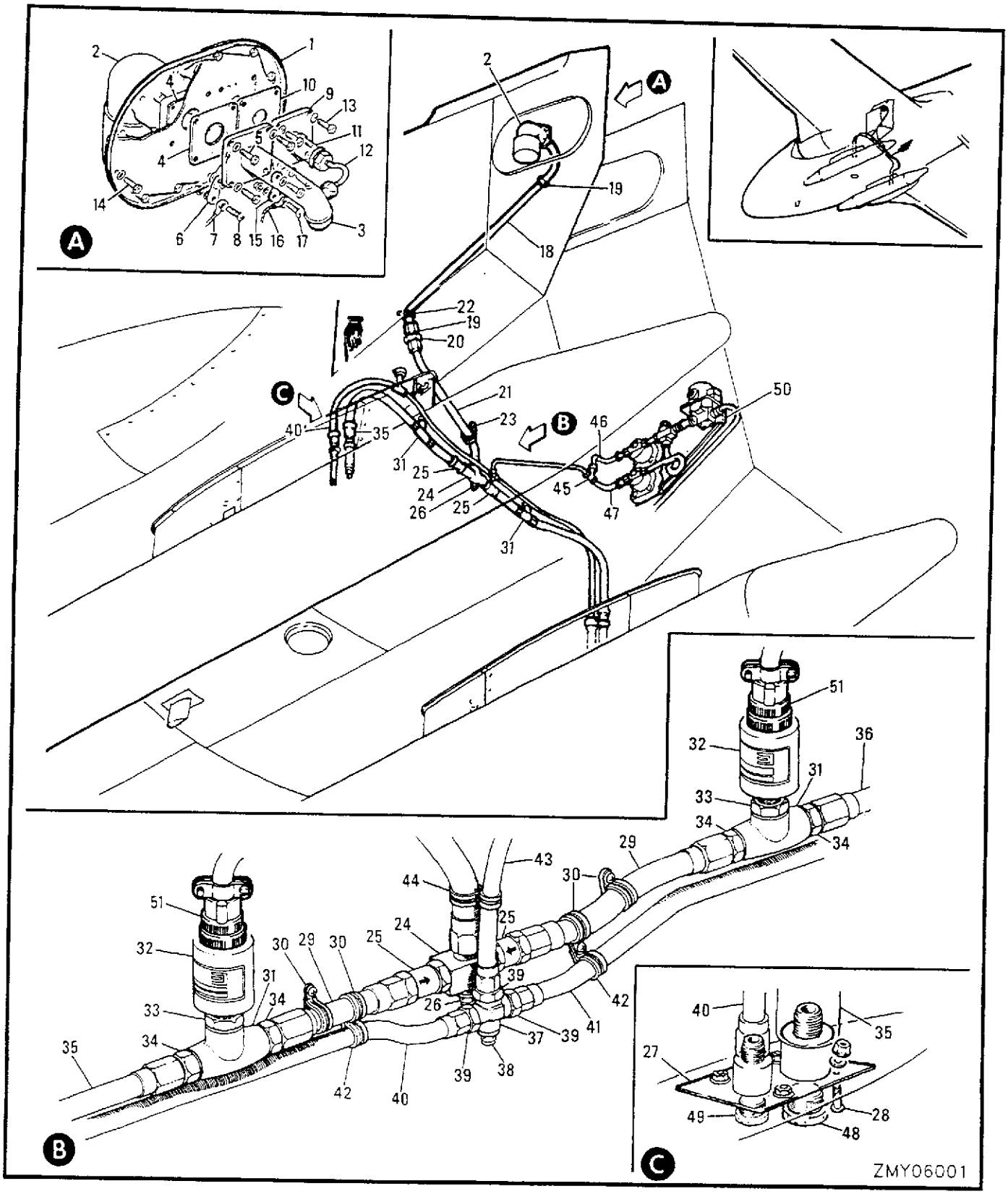

FIGURE 61A FUSELAGE AUXILIARY FUEL SYSTEM

	FIGURE AND INDEX NUMBER	GROUP	FUEL SYSTEM	EFFEC-TIVITY	UNITS PER ASSY
		MAJOR ASSEMBLY	FUSELAGE AUXILIARY FUEL SYSTEM		
		PART NUMBER	1 2 3 4 5 6 7 NOMENCLATURE		
	61A -	K41A-60018 *	KIT - FUEL SYSTEM INSTL AUX TANKS		NP
		K41A-60018-18	.FUEL CONTROL AND DOOR ASSY		1
	- 1	41A-65211-800	..DOOR ASSY - FUEL CELL ACCESS		1
	- 2	2660333M2	..VALVE ASSY - (V45681) FUEL LEVEL CONTROL (IAW 41G-60006-4)		1
	- 3	K41A-60018-125	..ELBOW ASSY (WELDED)		1
	- 4	41G-65010	..GASKET		2
	- 5	NAS1103-6	..BOLT		4
		AN960D10	..WASHER		3
	- 6	S1228A	..TAB		1
	- 7	MS25083-2BB3	..BONDING JUMPER		1
R	- 8	MS35207-262	..SCREW		1
		AN960D10	..WASHER		1
		MS21042L3	..NUT		1
	- 9	41G-65009	..FLANGE		1
	-10	41G-65010	..GASKET		1
		MS29512-04	..PACKING		1
	-11	4P10-12	..VALVE - (V82879) THERMAL RELIEF		1
	-12	41A-65209-28	..LINE ASSY - ELBOW TO RELIEF VALVE		1
		NAS1598-3Y	..SEALING WASHER		1
	-13	NAS1103-6	..BOLT		4
	-14	MS20073-04-04	.BOLT		12
		AN960D416	.WASHER		11
	-15	S1228-8	.TAB - (V88308)		1
	-16	MS25083-2BB8	.BONDING JUMPER		1
R	-17	MS35207-262	.SCREW		1
		AN960D10	.WASHER		1
		MS21042L3	.NUT		1
	-18	41A-65209-12	.LINE ASSY - FUEL (VALVE TO MANIFOLD)		1
	-19	3605-16D	.FLEX COUPLING - (V79326)		1
		MS29513-214	.PACKING		2
	-20	AN815-16D	.UNION		1
	-21	41A-65209-10	.LINE ASSY - FUEL (VALVE TO MANIFOLD)		1
R	-22	MS21919WDG16	.CLAMP		1
		MS27039-1-10	.SCREW		1
		AN960D10	.WASHER		1
		MS21042L3	.NUT		1
R	-23	MS21919WDG16	.CLAMP		1
R		MS21919WDG12	.CLAMP		1
		NAS43DD4-10	.SPACER		1
		MS35207-268	.SCREW		1
		MS21042L3	.NUT		1
	-24	41A-65208	.MANIFOLD		1
		MS29512-12	.PACKING		1
	-25	869A12TT	.VALVE - (V91816) CHECK		2
	-26	1100B52Z4	.VALVE - (V91511) MANIFOLD DRAIN		1
		MS29512-05	.PACKING		1
	-27	41G-65011	.FITTING ASSY - AUX TANK CONN - LH		1
		41G-65011-1	.FITTING ASSY - AUX TANK CONN - RH		1
	-28	NAS623-3-3	.SCREW		8
		AN960PD10L	.WASHER		8
		MS21042L3	.NUT		8
	-29	41A-65209-8	.LINE ASSY - MANIFOLD TO PRESS SWITCH (LH)		1
		41A-65209-6	.LINE ASSY - MANIFOLD TO PRESS SWITCH (RH)		1
R	-30	MS21919WDG12	.CLAMP		2
		MS27039-1-10	.SCREW		2
		AN960D10	.WASHER		2
		MS21042L3	.NUT		2
	-31	AN938-12D	.TEE		2

FIGURE AND INDEX NUMBER	GROUP	FUEL SYSTEM	EFFEC-TIVITY	UNITS PER ASSY
	MAJOR ASSEMBLY	FUSELAGE AUXILIARY FUEL SYSTEM		
	PART NUMBER	1 2 3 4 5 6 7 NOMENCLATURE		
61A -32	1G349-3 **	.SWITCH - (V09049) PRESSURE		2
-33	AN919-16D	.REDUCER		2
	MS29512-12	.PACKING		2
	MS29512-04 **	.PACKING		2
-34	AN815-12D	.UNION		4
	MS29512-12	.PACKING		4
-35	41A-65209-4	.LINE ASSY - PRESS SWITCH TO TANK CONN (LH)		1
-36	41A-65209-2	.LINE ASSY - PRESS SWITCH TO TANK CONN (RH)		1
-37	AN937-6D	.CROSS		1
-38	1100B52Z4	.VALVE - (V91511) CROSS DRAIN		1
	MS29512-05	.PACKING		1
-39	AN815-6D	.UNION		3
	MS29512-05	.PACKING		3
-40	41A-65209-26	.LINE ASSY - CROSS TO TANK AIR CONN (LH)		1
-41	41A-65209-24	.LINE ASSY - CROSS TO TANK AIR CONN (RH)		1
R -42	MS21919WDG12	.CLAMP		2
R	MS21919WDG6	.CLAMP		2
	MS27039-1-10	.SCREW		2
	MS21042L3	.NUT		2
-43	41A65209-22	.LINE ASSY - CROSS TO TEE FITTING (AIR)		1
R -44	MS21919WDG16	.CLAMP		1
R	MS21919WDG6	.CLAMP		1
	MS27039-1-10	.SCREW		1
	MS21042L3	.NUT		1
-45	AN824-6D	.TEE		1
-46	41A-65209-18	.LINE ASSY - TEE FITTING TO PRESS REGULATOR		1
-47	41A-65209-20	.LINE ASSY - TEE FITTING TO PRESS REGULATOR		1
-48	41G-65016	.PLUG - AUX TANK FITTING CONNECTOR (FUEL)		1
-49	41G-65017	.PLUG - AUX TANK FITTING CONNECTOR (AIR)		1
-50	K41A-60018-2	.PANEL ASSY - VALVES (SEE FIGURE 61B)		REF
	K41A-58029	KIT - COCKPIT RECONFIGURATION AUX FUEL (SEE FIGURE 115)		REF
-51	MS3106R10SL3S	.CONNECTOR - (P2EF & P3EF) PRESS SWITCH		2
		-000-		
	*	IAW C-12-114-000/CD-031		
	**	IAW C-12-114-000/CF-450		

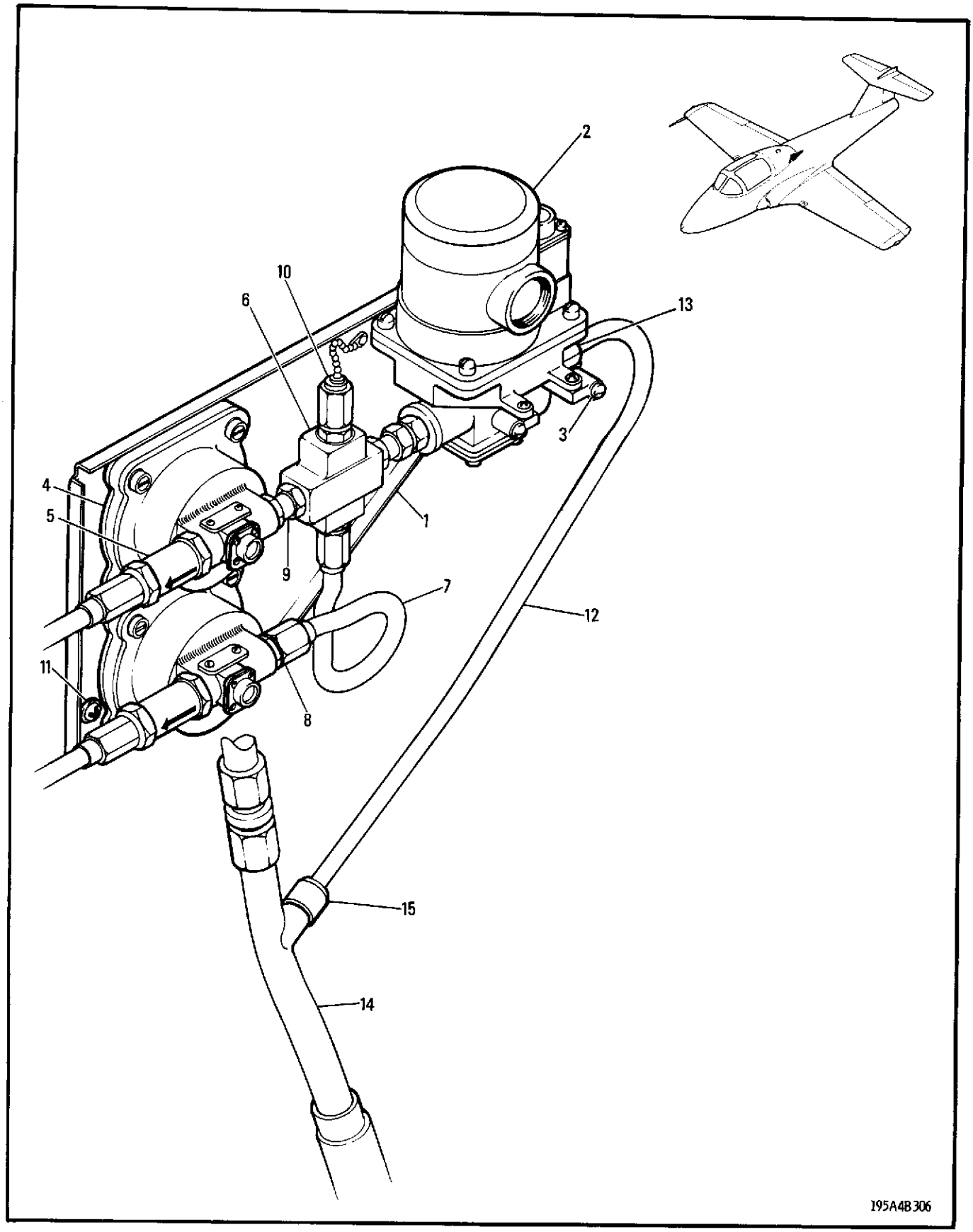

FIGURE 61B AUX FUEL AIR PRESSURE REGULATOR PANEL

	FIGURE AND INDEX NUMBER	GROUP	FUEL SYSTEM	EFFEC-TIVITY	UNITS PER ASSY
		MAJOR ASSEMBLY	AUX FUEL AIR PRESSURE REGULATOR PANEL		
		PART NUMBER	1 2 3 4 5 6 7 NOMENCLATURE		
	61B -	K41A-60018 *	KIT - FUEL SYSTEM INSTL AUX TANKS (SEE FIGURE 61A)		REF
		K41A-60018-2	.PANEL ASSY		1
	- 1	K41A-60018-4	..PANEL		1
R	- 2	AV16E1274	..VALVE - (V11065) AIR SHUT-OFF ELECTRIC (AS PER 41G-60007-6)		1
	- 3	AN502-416-10	..SCREW		2
		NAS43DD4-10	..SPACER		2
		AN960D416	..WASHER		2
R	- 4	392904-1	..REGULATOR (V70210) AIR PRESSURE (AS PER 41G-60008)		2
		AN960D8L	..WASHER		8
		MS21042L08	..NUT		8
R	- 5	859A6TT	..VALVE - (V91816) CHECK AIR REGULATOR		2
		MS29512-05	..PACKING		2
	- 6	AN937D6	..CROSS		1
	- 7	41A-65209-14	..LINE ASSY - CROSS TO PRESS REGULATOR		1
	- 8	AN815-6D	..UNION		3
		MS29512-05	..PACKING		3
	- 9	AN832-6D	..UNION		2
		MS29512-05	..PACKING		2
		AN924-6D	..NUT		2
	-10	AN929A6	..CAP		1
		NAS1201B6A6A	..CHAIN		1
	-11	MS27039-1-07	.SCREW		4
		AN960D10	.WASHER		4
	-12	41A-65209-16	.LINE ASSY - SHUT-OFF VALVE TO WATER SEP		1
	-13	AN815-6D	.UNION		1
		MS29512-05	.PACKING		1
		K41A-60018-16	.TUBE ASSY - (WELDED)		1
	-14	41A-95218-16	..TUBE ASSY - WATER SEP (MODIFIED) (SEE SECTION 9)		REF
	-15	AN815-16D	.UNION		1
		K41A-58029	KIT - COCKPIT RECONFIGURATION AUX FUEL (SEE FIGURE 115)		REF
	-16	MS3106R10SL3S	CONNECTOR - AIR SHUT-OFF VALVE (P1EF)		1
			-OOO-		
		*	AS PER C-12-114-000/CD-031		

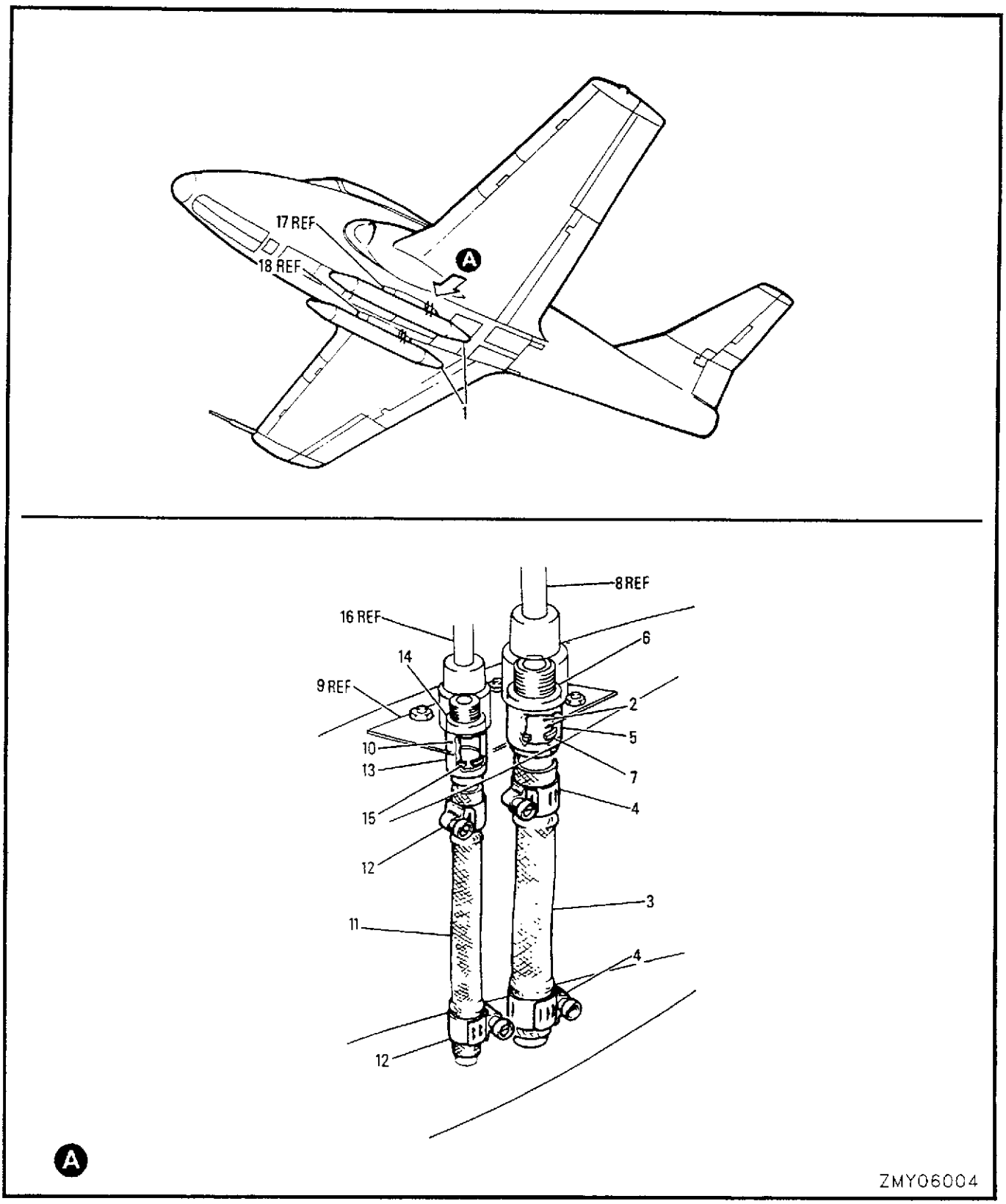

FIGURE 61C AUXILIARY FUEL TANKS & DISCONNECTS

	FIGURE AND INDEX NUMBER	GROUP		FUEL SYSTEM	EFFEC-TIVITY	UNITS PER ASSY
		MAJOR ASSEMBLY		AUXILIARY FUEL TANKS & DISCONNECTS		
		PART NUMBER		1 2 3 4 5 6 7 NOMENCLATURE		
	61C -	K41A-60016	*	KIT - FUS AUX FUEL SYSTEM INSTL		NP
R	- 1	118J000-800		.TANK ASSY - (V62793) EXTERNAL FUEL (IAW 416-60012-802)		2
		K41A-60018		.KIT - FUEL SYSTEM INSTL AUX TANKS (SEE FIGURE 61A)		REF
		K41A-60018-110		..DISCONNECT ASSY - FUS FUEL LINE		NP
	- 2	41G-65022		...NIPPLE		1
	- 3	K41A-60018-118		...HOSE - FUEL		1
R	- 4	QS200M12S		...CLAMP - (V08484)		2
	- 5	41G-65024		..ADAPTER - FUEL HOSE		1
	- 6	MS29512-10		..PACKING		1
	- 7	MS29513-210		..PACKING		1
	- 8	41A-65209-4		..LINE ASSY (LH) (SEE FIGURE 61A)		REF
	- 9	41G-65011		..FITTING ASSY (SEE FIGURE 61A)		REF
		K41A-60018-112		..DISCONNECT ASSY - FUS AIR LINE		NP
	-10	41G-65023		...NIPPLE		1
	-11	K41A-60018-122		...HOSE - AIR		1
R	-12	QS200M8S		...CLAMP - (V08484)		2
	-13	41G-65025		..ADAPTER - AIR HOSE		1
	-14	MS29512-06		..PACKING		1
	-15	NAS1593-111		..PACKING		1
	-16	41A-65209-26		..LINE ASSY - AIR LH (SEE FIGURE 61A)		REF
	-17	41G-27200-810		.PYLON ASSY - LH (I) (SEE FIGURE 61D)		REF
	-18	41G-27200-811		.PYLON ASSY - RH (I) (SEE FIGURE 61D)		REF
				-000-		
			*	IAW C-12-114-000/CD-031		

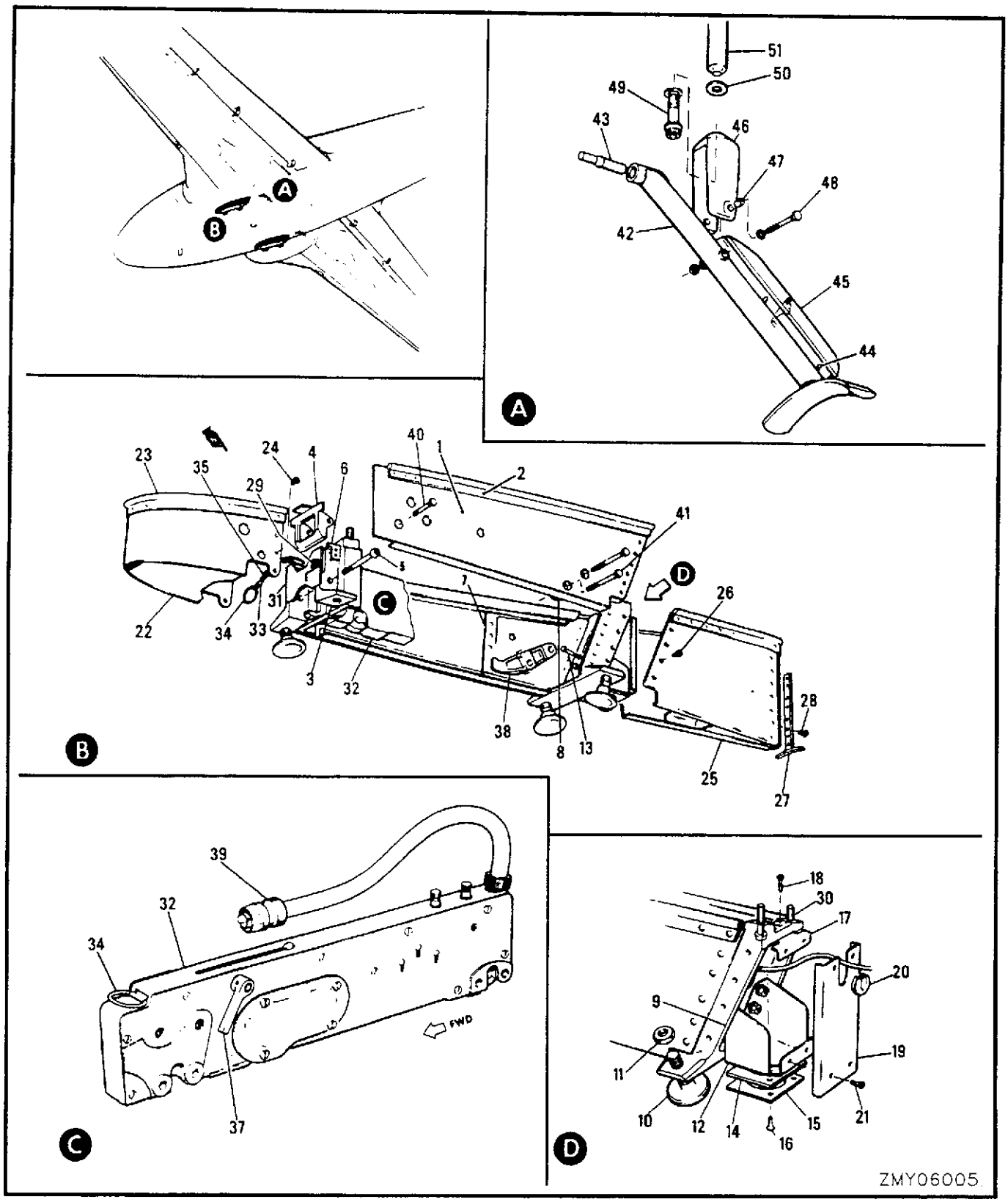

FIGURE 61D FUSELAGE PYLONS - AUX FUEL TANKS

FIGURE AND INDEX NUMBER	GROUP	FUEL SYSTEM	EFFEC-TIVITY	UNITS PER ASSY
	MAJOR ASSEMBLY	FUSELAGE PYLONS – AUX FUEL TANKS		
	PART NUMBER	1 2 3 4 5 6 7 NOMENCLATURE		
61D -	41G-27200-810 *	PYLON ASSY & INSTL - FUSELAGE LH (I)		NP
	41G-27200-811 *	PYLON ASSY & INSTL - FUSELAGE RH (I)		NP
- 1	41G-27212-3	.SKIN - CENTRE (PORT PYLON LH)		1
	41G-27212-4	.SKIN - CENTRE (PORT PYLON RH)		1
	41G-27212-5	.SKIN - CENTRE (STBD PYLON LH)		1
	41G-27212-3	.SKIN - CENTRE (STBD PYLON RH)		1
- 2	41G-27200-62	.SEAL - CENTRE (PORT PYLON LH) (REFER TO PART 4 PAGE 23)		1
	41G-27200-2	.SEAL - CENTRE (PORT PYLON RH) (REFER TO PART 4 PAGE 23)		1
	41G-27200-3	.SEAL - CENTRE (STBD PYLON LH) (REFER TO PART 4 PAGE 23)		1
	41G-27200-63	.SEAL - CENTRE (STBD PYLON RH) (REFER TO PART 4 PAGE 23)		1
- 3	41G-27210	.FITTING - PORT PYLON FWD		1
	41G-27210-1	.FITTING - STBD PYLON FWD		1
- 4	41G-27207	.RESTRAINER ASSY		1
- 5	MS20005-54	.BOLT		1
	MS20002-4	.WASHER		1
- 6	41G-27206-2	.STOP - RESTRAINER (RIVETED)		2
- 7	41G-27222	.FITTING - PORT PYLON INNER		1
	41G-27222-1	.FITTING - STBD PYLON INNER		1
- 8	41G-27221	.FITTING - PORT PYLON OUTER		1
	41G-27221-1	.FITTING - STBD PYLON OUTER		1
- 9	41G-27220	.FITTING ASSY - PORT PYLON AFT		1
	41G-27220-1	.FITTING ASSY - STBD PYLON AFT		1
-10	41G-27307-4	.SCREW ASSY - SWAY BRACE ADJUSTING		4
R -11	AN364-720	.NUT - ADJUSTING		4
-12	41G-27223-4	.BRACKET ASSY - RECEPTACLE SUPPORT		1
-13	AN3-4	.BOLT		4
	MS21042L3	.NUT		4
-14	41G-27223-10	.PLATE		1
-15	41G-27223-12	.PLATE		1
-16	MS35207-263	.SCREW		3
-17	41G-27223-2	.BRACKET ASSY		1
-18	MS24693-29	.SCREW		2
	MS21042L06	.NUT		2
-19	41G-27223-16	.COVER ASSY		1
-20	MS35489-11	.GROMMET		1
-21	MS35207-263	.SCREW		4
-22	41G-27201-4	.FAIRING ASSY - PORT PYLON FWD		1
	41G-27201-5	.FAIRING ASSY - STBD PYLON FWD		1
-23	41G-27201-12	..SEAL - (REFER TO PART 4 PAGE 23)		1
-24	NAS623-3-8	.SCREW		6
-25	41G-27202	.FAIRING ASSY - PORT PYLON AFT		1
	41G-27202-1	.FAIRING ASSY - STBD PYLON AFT		1
-26	NAS623-3-4	.SCREW		8
-27	41G-27407	.CRUTCH		1
-28	NAS623-3-6	.SCREW		2
-29	MS20005-18	.BOLT - FWD FITTING ATTACH (INBD)		1
	MS20005-26	.BOLT - FWD FITTING ATTACH (OUTBD)		1
	MS20002C-5	.WASHER		2
-30	MS20005-18	.BOLT - AFT FITTING ATTACH (INBD)		1
	MS20005-24	.BOLT - AFT FITTING ATTACH (OUTBD)		1
	MS20002C5	.WASHER		2
-31	41A-26000-2	.MARKER		1
	41A-26000-4	.MARKER		1
	41G-27305-810	.RACK ASSY - BOMB		1
-32	41G-27305-24	..RACK - (V27096)		1
-33	41A-27305-3	..CABLE		1
	*	IAW C-12-114-OOO/CD-031		

	FIGURE AND INDEX NUMBER	GROUP	FUEL SYSTEM	EFFEC-TIVITY	UNITS PER ASSY
		MAJOR ASSEMBLY	FUSELAGE PYLONS – AUX FUEL TANKS		
		PART NUMBER	1 2 3 4 5 6 7 NOMENCLATURE		
	61D -34	41A-27305-5	..RING		1
R	-35	28-1C	..SLEEVE - (V76691)		2
	-36	41G-27334-10	..SHAFT		1
		41G-27335	..SPRING		1
R		S1246T20-14-15	..WASHER - (V88308)		2
	-37	41G-27332	..LEVER		1
		NAS1407P7M8	..PIN		1
	-38	41G-27211	..HOOK - (SUPPLIED LOOSE)		1
	-39	MS3106R18-1P	..CONNECTOR		1
	-40	NAS1105-30	.BOLT - RACK ATTACH (FWD)		1
	-41	NAS1105-49	.BOLT - RACK ATTACH (AFT)		2
		MS21042L5	.NUT		3
		41G-27225-800	CRUTCH ASSY & INSTL - FUS AUX TANK (I)		1
	-42	41G-27226	.CRUTCH ASSY		1
	-43	41G-27228	.PIN		1
	-44	MS24692-173P	.PIN		2
	-45	41G-27330-2	.FAIRING		1
	-46	41G-27227	.FORK		1
	-47	NAS77-4-18	.BUSHING		2
	-48	AN4-21A	.BOLT		1
		MS21042L4	.NUT		1
	-49	MS21250-08018	.BOLT		1
		MS20002C8	.WASHER (UNDER HEAD)		1
		AN960-816	.WASHER (UNDER HEAD)		AR
R	-50	S1246-32-32-63	.WASHER - (V88308)		AR
	-51	41G-35043	FITTING - CRUTCH & JACKING (LH) (SEE FIGURE 19)		REF

-OOO-

SECTION 7

FLIGHT CONTROLS

TABLE OF CONTENTS

FIGURE	TITLE	PAGE
62	FLIGHT CONTROLS	7-02
63	FORWARD FUSELAGE BELLCRANK & LEVERS	7-04
64	FORWARD FUSELAGE CONTROL RODS	7-08
65	COCKPIT RUDDER & BRAKE CONTROLS	7-12
66	COCKPIT RUDDER & BRAKE CONTROLS	7-16
67	CONTROL COLUMN	7-20
68	COCKPIT FLIGHT CONTROL LEVERS	7-24
69	AILERON CONTROLS	7-26
70	WING AILERON TAB CONTROL	7-30
71 (1 OF 2)	POWER & FLAP CONTROLS	7-34
71 (2 OF 2)	POWER & FLAP CONTROLS	7-36
72	POWER & FLAP CONTROL BOX	7-38
73	CENTRE CONSOLE POWER & FLAP LEVERS	7-42
74	FLAP FOLLOW UP SYSTEM MECHANISM	7-44
75	FLAP INTERCONNECT	7-48
76	AFT FUSELAGE BELLCRANK & LEVERS	7-50
77	AFT FUSELAGE CONTROL RODS	7-54
77A	ELEVATOR CONTROL RODS & TORQUE TUBE	7-58
78	ELEVATOR TRIM & GEARED TAB CONTROLS	7-62

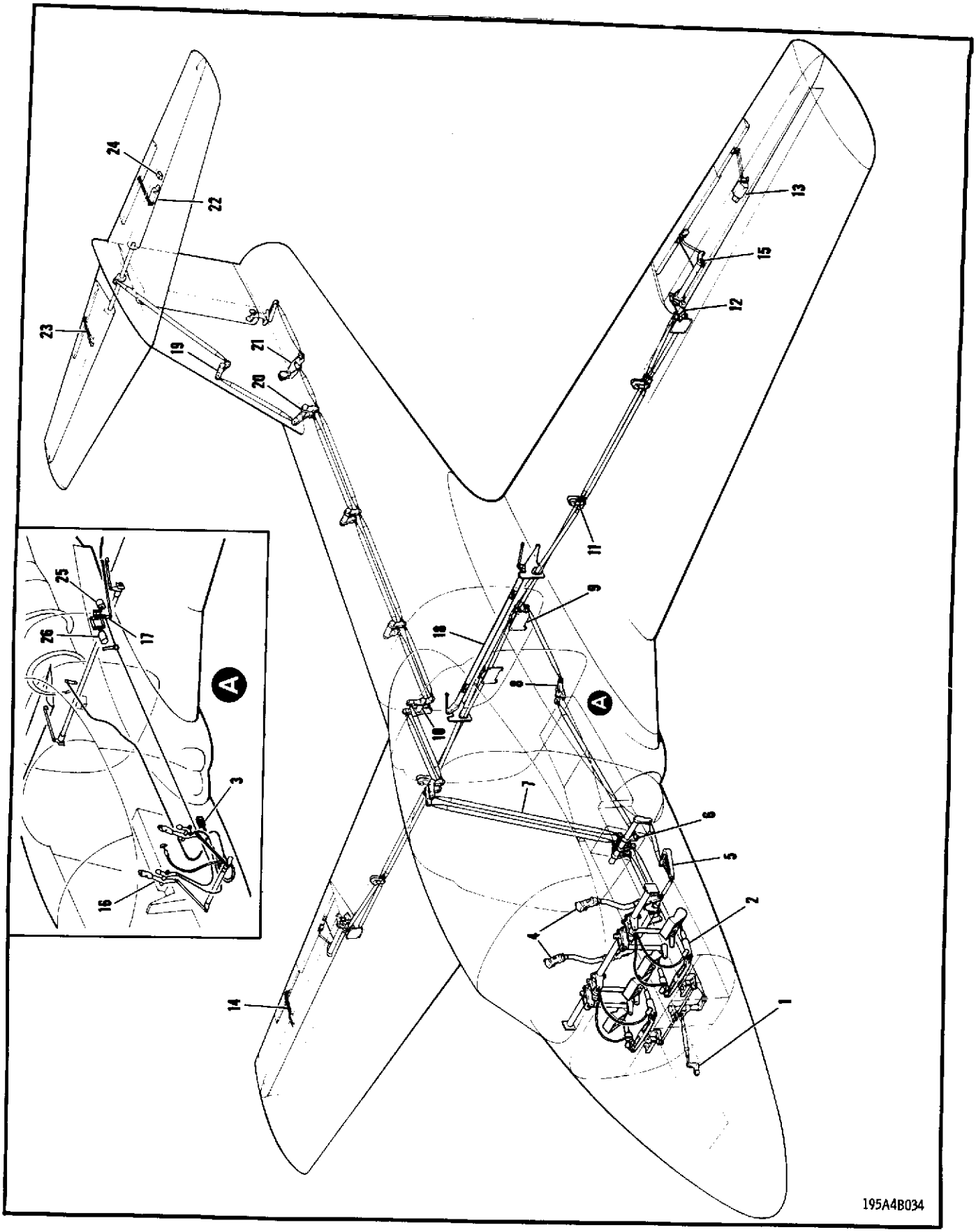

FIGURE 62 FLIGHT CONTROLS

FIGURE AND INDEX NUMBER	GROUP	FLIGHT CONTROLS	EFFEC-TIVITY	UNITS PER ASSY
	MAJOR ASSEMBLY	FLIGHT CONTROLS		
	PART NUMBER	1 2 3 4 5 6 7 NOMENCLATURE		
62 - 1	41A-90372-2	LEVER - NOSE WHEEL STEERING (SEE SECTION 4)		REF
- 2	R819	SCREW JACK ASSY - RUDDER PEDAL ADJUSTING (SEE FIG. 65A)		REF
- 3	40253	VALVE CONTROL ASSY - LDG/GR EMERGENCY (SEE SECTION 8)		REF
- 4	G56679	GRIP ASSY - TYPE B8A (SEE FIG. 66)		REF
- 5	41A-90403	LEVER ASSY - AILERON CONTROL (SEE FIG. 63)		REF
- 6	41A-90404	LEVER - FUSELAGE STA 208 AILERON CONTROL (SEE FIG. 68)		REF
- 7	41A-90099-8	ROD ASSY - FUS STA 208-231 RUDDER CONTROL (SEE FIG. 64)		REF
- 8	41A-90425	LEVER ASSY - FUS STA 260 AILERON CONTROL (SEE FIG. 63)		REF
- 9	41A-90415	BRACKET - FUS STA 285 AILERON CONTROL (LH) (SEE FIG. 63)		REF
-10	41A-90407	SHAFT - FLIGHT CONTROLS (SEE FIG. 63)		REF
-11	41A-90652	LEVER ASSY - WING STA 60 AILERON CONTROL (SEE FIG. 69)		REF
-12	41A-90662	ROD ASSY - AILERON CONTROL (SEE FIG. 69)		REF
-13	R422M22-1	ACTUATOR ASSY - AILERON TRIM TAB (SEE FIG. 70)		REF
-14	41A-90602	ROD ASSY - AILERON GEAR TAB (SEE FIG. 70)		REF
-15	40252-2	PUSH PULL UNIT - FLAP CONTROL (SEE FIG. 71)		REF
-16	KY925	GRIP ASSY -(THROTTLE CTL) (SEE FIG. 72 & 73)		REF
-17	41A-90857-8	LEVER - FLAP FOLLOW UP (SEE FIG. 74)		REF
-18	41A-90865	TORQUE TUBE ASSY - FLAP INTERCONNECT (SEE FIG. 75)		REF
-19	41A-90552-2	LEVER ASSY - FIN ELEVATOR CONTROL (SEE FIG. 76)		REF
-20	41A-90460	LEVER ASSY - FUS STA 387 (SEE FIG. 76)		REF
-21	41A-90466	LEVER ASSY - FUS STA 407 RUDDER (SEE FIG. 76)		REF
-22	R422M25-1	ACTUATOR ASSY - ELEVATOR TRIM (SEE FIG. 78)		REF
-23	41A-90607	ROD ASSY - ELEVATOR GEARE D TAB (SEE FIG. 78)		REF
-24	41A-42113	RELAY INSTL - AILERON TRIM TAB CONTROL (SEE SECTION 12)		REF
R -25	MIL-T-5583A	TRANSMITTER - FOLLOW UP (SEE SECTION 14)		REF
-26	3293000-1	VALVE ASSY - FLAP SELECTOR (SEE SECTION 8)		REF

-000-

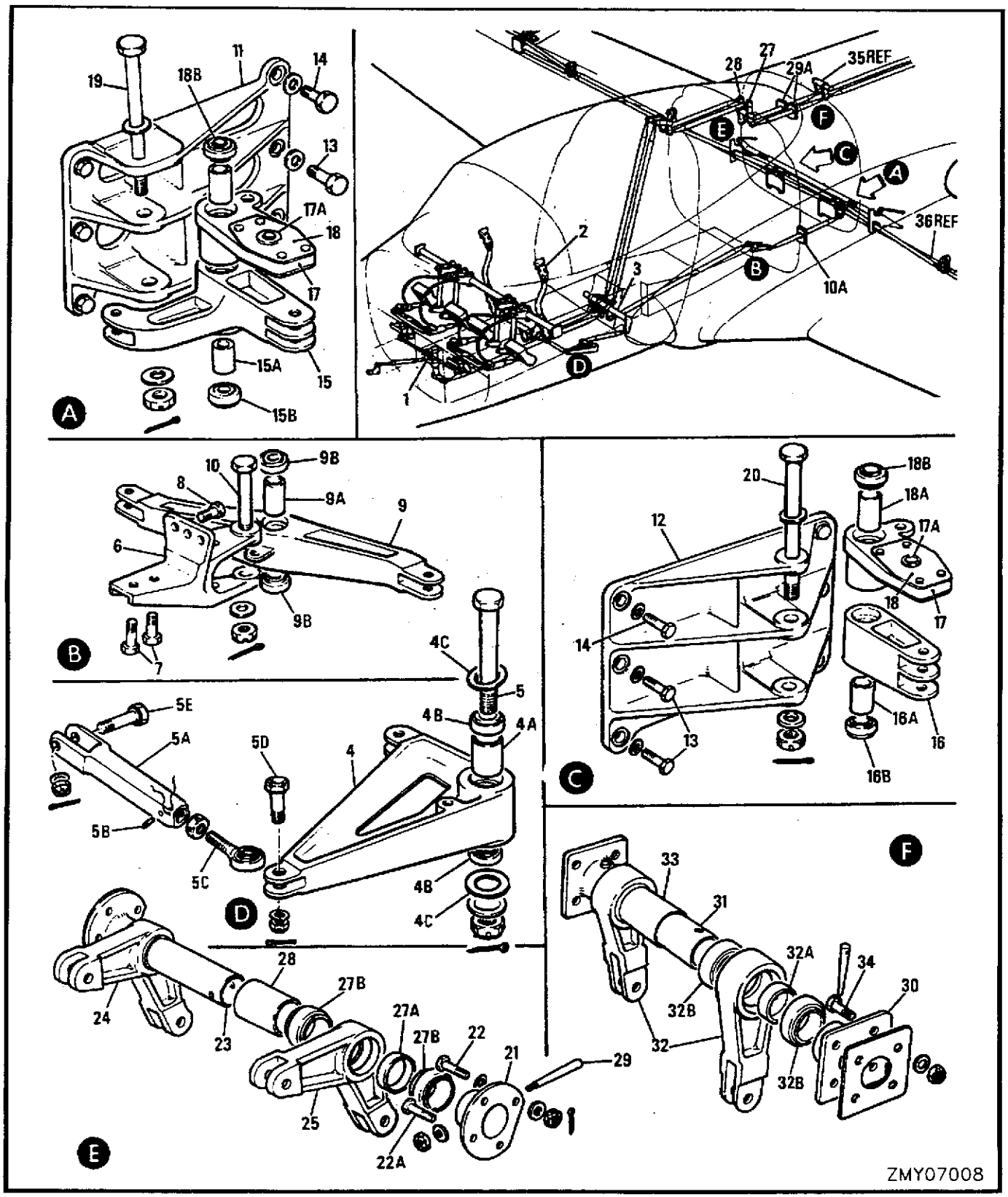

FIGURE 63 FORWARD FUSELAGE BELLCRANK & LEVERS

FIGURE AND INDEX NUMBER	GROUP	FLIGHT CONTROLS	EFFEC-TIVITY	UNITS PER ASSY
	MAJOR ASSEMBLY	FORWARD FUSELAGE BELLCRANK & LEVERS		
	PART NUMBER	1 2 3 4 5 6 7 NOMENCLATURE		
63 -	41A-90004	FLIGHT CONTROLS INSTL - FORWARD FUSELAGE (SEE SECTION 3)		NP
- 1	41A-90201	.RUDDER & BRAKE CONTROLS INSTL - COCKPIT (SEE FIG. 65)		REF
- 2	41A-90151	.CONTROL COLUMN ASSY - (SEE FIG. 66)		REF
- 3	41A-90435	.LEVER INSTL - FUS STA 208 FLIGHT (SEE FIG. 68)		REF
	41A-90442	.BELLCRANK INSTL - FUS STA 189 AILERON CTL		NP
	41A-90403	..LEVER ASSY - AILERON CONTROL		1
- 4	41A-90403-2	...LEVER - AILERON CONTROL		1
- 4A	NAS43DD8-76	...SPACER		1
- 4B	MS27641-8	...BEARING		2
- 4C	S1246LS32-26-110	..WASHER - (V88308) (PEEL SHIMS AS REQUIRED)		2
- 5	NAS1108-44D	..BOLT		1
	AN960PD816	..WASHER		1
	AN320-8	..NUT		1
	MS24665-285	..COTTER PIN		1
	41A-90443	.LINK ASSY - AILERON CONTROL		1
	41A-90443-2	..LINK ASSY - AILERON CONTROL		1
- 5A	41A-90443-4	...LINK - AILERON CONTROL		1
- 5B	MS21209F6-15	...INSERT		1
- 5C	ST4AR	..ROD END - (V77896)		1
	NAS509-6	..NUT		1
R - 5D	NAS6204-14D	.BOLT		1
R - 5E	NAS6204-12D	.BOLT		1
	AN960PD416	.WASHER		2
	AN320-4	.NUT		2
	MS24665-136	.COTTER PIN		2
	41A-90438	.LEVER INSTL - FUS STA 260 AILERON CONTROL		NP
- 6	41A-90426	..BRACKET - FUS STA 260 AILERON CONTROL		1
- 7	NAS1103-4	..BOLT		2
- 8	NAS1103-12	..BOLT		3
	AN960PD10L	..WASHER		5
	41A-90425	..LEVER ASSY - FUS STA 260 AILERON CONTROL		1
- 9	41A-90425-2	...LEVER - FUS STA 260 AILERON CONTROL		1
- 9A	41A-90430-18	...SPACER - FLIGHT CONTROLS		1
- 9B	MS27641-6	...BEARING		2
-10	NAS464P6-33	..BOLT		1
	AN960PD616	..WASHER		1
	AN320-6	..NUT		1
	MS24665-285	..COTTER PIN		1
-10A	41A-90451-12	.TRAP - FLAME (IAW C-12-114-000/CF-199)		1
	41A-90437	.LEVER INSTL - FUS STA 285 AILERON CONTROL		NP
-11	41A-90415	..BRACKET - FUS STA 285 AILERON CONTROL(LH)		1
-12	41A-90436	..BRACKET - FUS STA 285 AILERON CONTROL(RH)		1
R -13	NAS6204-5	..BOLT		8
R -14	NAS6204-7	..BOLT		4
	AN960PD416L	..WASHER		12
	MS21042L4	..NUT		12
	41A-90419	..LEVER ASSY - FUS STA 285 AILERON CTL (LH)		1
-15	41A-90419-2	...LEVER - FUS STA 285 AILERON CTL (LH)		1
-15A	41A-90430-20	...SPACER - FLIGHT CONTROLS		1
-15B	MS27641-6	...BEARING		2
	41A-90424	..IDLER ASSY - FUS STA 285 AILERON CTL (RH)		1
-16	41A-90424-2	...IDLER - FUS STA 285 AILERON CTL (RH)		1
-16A	41A-90430-24	...SPACER - FLIGHT CONTROLS		1
-16B	MS27641-6	...BEARING		2
	41A-90422	..LEVER ASSY - FUS STA 285 AILERON CONTROL		2
-17	41A-90422-2	...LEVER - FUS STA 285 AILERON CONTROL		1
-17A	B4	....BEARING - (V77896)		1
-18	41A-90462	...RETAINER - FUS STA 285 AIL. CTL(BEARING)		2
-18A	41A-90430-22	...SPACER - FLIGHT CONTROLS		1
-18B	MS27641-6	...BEARING		2
-19	NAS1106-68D	..BOLT - (LH)		1

FIGURE AND INDEX NUMBER	GROUP	FLIGHT CONTROLS	EFFEC-TIVITY	UNITS PER ASSY
	MAJOR ASSEMBLY	FORWARD FUSELAGE BELLCRANK & LEVERS		
	PART NUMBER	1 2 3 4 5 6 7 NOMENCLATURE		
63 -20	NAS1106-58D	..BOLT - (RH)		1
-20	AN960PD616	..WASHER		2
	AN320-6	..NUT		2
	MS24665-285	..COTTER PIN		2
	41A-90410	.SHAFT INSTL - FUSELAGE STA 231 CONTROL		NP
	41A-90413	.SHAFT INSTL - FUSELAGE STA 263 CONTROL		NP
-21	41A-90408	..HOUSING - FLIGHT CONTROLS SHAFT		2
-22	NAS1103-4	..BOLT		6
-22A	NAS1103-8	..BOLT		2
	41A-90444-2	..SHIM - FLIGHT CONTROLS LAMINATED		2
	AN960PD10	..WASHER		16
	MS21083N3	..NUT		8
-23	41A-90407	..SHAFT - FLIGHT CONTROLS		1
	41A-90405-2	..LEVER ASSY - FUS STA 231 ELEVATOR CONTROL		1
	41A-90405-4	..LEVER ASSY - FUS STA 231 RUDDER CONTROL		1
	41A-90405-6	..LEVER ASSY - FUS STA 262 ELEVATOR CONTROL		1
	41A-90405-8	..LEVER ASSY - FUS STA 262 RUDDER CONTROL		1
-24	41A-90405-10	...LEVER - (ON 41A-90405-2)		1
-25	41A-90405-12	...LEVER - (ON 41A-90405-4)		1
-26	41A-90405-14	...LEVER - (ON 41A-90405-6)		1
-27	41A-90405-16	...LEVER - (ON 41A-90405-8)		1
-27A	41A-90430-4	...SPACER - FLIGHT CONTROLS		1
R -27B	B542DD	...BEARING - (V21335)		2
-28	41A-90430-10	..SPACER - FLIGHT CONTROLS		1
-29	AN386-1-13A	..PIN		2
	AN975-3	..WASHER		2
	MS21083N3	..NUT		2
-29A	41A-90451-10	.TRAP - FLAME (IAW C-12-114-000/CF-199)		2
	41A-90455	.LEVER INSTL - FUSELAGE STA 296 CONTROL		NP
	41A-90448	..LEVER ASSY - FLIGHT CTL (FUS STA 296)		1
-30	41A-90446	...HOUSING - CONTROL BEARING (FUS STA 296)		2
-31	41A-90447	...SHAFT - FLIGHT CTL (FUS STA 296)		1
	41A-90445	...LEVER ASSY - FLIGHT CTL (FUS STA 296)		2
-32	41A-90445-2	....LEVER - FLIGHT CTL (FUS STA 296)		1
-32A	41A-90430-8	....SPACER - FLIGHT CONTROLS		1
R -32B	B540DD	....BEARING - (V21335)		2
-33	41A-90430-12	...SPACER - FLIGHT CONTROLS		1
	MS24692-187	...PIN		2
-34	NAS1103-2	..BOLT		8
	41A-90444-4	..SHIM - FLIGHT CONTROLS LAMINATED		1
	AN960PD10L	..WASHER		8
	MS21042L3	..NUT		8
-35	41A-90445	LEVER ASSY - CONTROL (FUS STA 339) (SEE FIG. 76)		REF
-36	41A-90099-144	ROD ASSY - CONTROL (BELLCRANK TO WG STA 60) (SEE FIG. 69)		

-000-

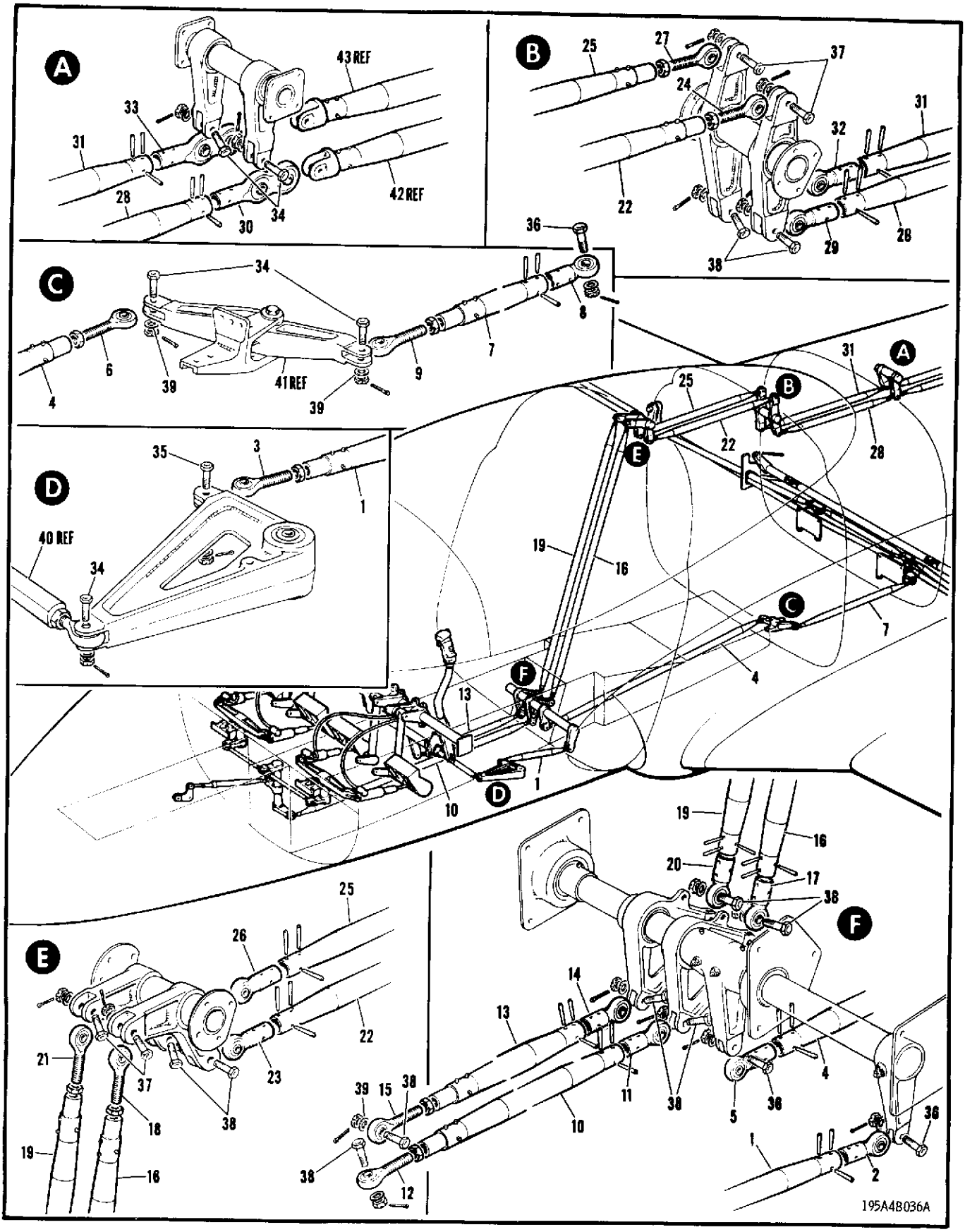

FIGURE 64 FORWARD FUSELAGE CONTROL RODS

FIGURE AND INDEX NUMBER	GROUP: FLIGHT CONTROLS MAJOR ASSEMBLY: FORWARD FUSELAGE CONTROL RODS PART NUMBER	1 2 3 4 5 6 7 NOMENCLATURE	EFFEC-TIVITY	UNITS PER ASSY
64 -	41A-90004	FLIGHT CONTROLS INSTL - FORWARD FUSELAGE (SEE FIG. 63)		REF
	41A-90099-36	.ROD ASSY - AILERON CONTROL (FUS STA 190-208) (FOR SPARES ORDER 41A-90099-72)		1
	41A-90099-72	.ROD ASSY - (SPARE FOR 41A-90099-36)		
	41A-90099-136	..ROD ASSY - AILERON CONTROL		1
- 1	41A-90099-236	...ROD - CONTROL		1
- 2	SPH4-10C-1	...ROD END		1
	41A-90103	...INSERT - CONTROL ROD		1
	MS24692-111	...PIN		6
R - 3	ST4AR	..ROD END - (V77896) (FOR SPARES ORDER 41A-90099-74)		1
	41A-90099-74	..ROD END - (SPARE FOR ST4AR)		
	NAS509-6	..NUT		1
	41A-90099-38	.ROD ASSY - AILERON CONTROL (FUS STA 208-262)		1
	41A-90099-138	..ROD ASSY - AILERON CONTROL		1
- 4	41A-90099-238	...ROD - CONTROL		1
- 5	SPH4-10C-1	...ROD END		1
	41A-90103	...INSERT - CONTROL ROD		1
	MS24692-111	...PIN		6
R - 6	ST4AR	..ROD END - (V77896)		1
	NAS509-6	..NUT		1
	41A-90099-40	.ROD ASSY - AILERON CONTROL (FUS STA 262-287)		1
	41A-90099-140	..ROD ASSY - AILERON CONTROL		1
- 7	41A-90099-240	...ROD - CONTROL		1
- 8	SPH4-10C-1	...ROD END		1
	41A-90103	...INSERT - CONTROL ROD		1
	MS24692-111	...PIN		6
R - 9	ST4AR	..ROD END - (V77896)		1
	NAS509-6	..NUT		1
	41A-90099-6	.ROD ASSY - RUDDER CONT (FUS STA 154-208)		1
	41A-90099-106	..ROD ASSY - RUDDER CONTROL		1
-10	41A-90099-206	...ROD - CONTROL		1
-11	SPH4-10C-1	...ROD END		1
	41A-90103	...INSERT - CONTROL ROD		1
	MS24692-111	...PIN		6
R -12	ST4AR	..ROD END - (V77896)		1
	NAS509-6	..NUT		1
	41A-90099-20	.ROD ASSY - ELEVATOR CONT(FUS STA 181-208)		1
	41A-90099-120	..ROD ASSY - ELEVATOR CONTROL		1
-13	41A-90099-220	...ROD - CONTROL		1
-14	SPH4-10C-1	...ROD END		1
	41A-90103	...INSERT - CONTROL ROD		1
	MS24692-135	...PIN		6
R -15	ST4AR	..ROD END - (V77896)		1
	NAS509-6	..NUT		1
	41A-90099-8	.ROD ASSY - RUDDER CONT (FUS STA 208-231)		1
	41A-90099-108	..ROD ASSY - RUDDER CONTROL		1
-16	41A-90099-208	...ROD - CONTROL		1
-17	SPH4-10C-1	...ROD END		1
	41A-90103	...INSERT - CONTROL ROD		1
	MS24692-111	...PIN		6
R -18	ST4AR	..ROD END - (V77896)		1
	NAS509-6	..NUT		1
	41A-90099-22	.ROD ASSY - ELEVATOR CONT(FUS STA 208-231)		1
	41A-90099-122	..ROD ASSY - ELEVATOR CONTROL		1
-19	41A-90099-222	...ROD - CONTROL		1
-20	SPH4-10C-1	...ROD END		1
	41A-90103	...INSERT - CONTROL ROD		1
	MS24692-135	...PIN		6

FIGURE AND INDEX NUMBER	GROUP	FLIGHT CONTROLS	EFFEC-TIVITY	UNITS PER ASSY
	MAJOR ASSEMBLY	FORWARD FUSELAGE CONTROL RODS		
	PART NUMBER	1 2 3 4 5 6 7 NOMENCLATURE		
64 -21	ST4AR	..ROD END - (V77896)		1
	NAS509-6	..NUT		1
	41A-90099-10	.ROD ASSY - RUDDER CONT (FUS STA 231-263)		1
	41A-90099-110	..ROD ASSY - RUDDER CONTROL		1
-22	41A-90099-210	...ROD - CONTROL		1
-23	SPH4-10C-1	...ROD END		1
	41A-90103	...INSERT - CONTROL ROD		1
	MS24692-111	...PIN		6
-24	ST4AR	..ROD END - (V77896)		1
	NAS509-6	..NUT		1
	41A-90099-24	.ROD ASSY - ELEVATOR CONT(FUS STA 231-263)		1
	41A-90099-124	..ROD ASSY - ELEVATOR CONTROL		1
-25	41A-90099-224	...ROD - CONTROL		1
-26	SPH4-10C-1	...ROD END		1
	41A-90103	...INSERT - CONTROL ROD		1
	MS24692-135	...PIN		6
-27	ST4AR	..ROD END - (V77896)		1
	NAS509-6	..NUT		1
	41A-90099-12	.ROD ASSY - RUDDER CONT (FUS STA 263-296)		1
-28	41A-90099-212	..ROD - CONTROL		1
-29	SPH4-10C-1	..ROD END		1
	41A-90421	..END FITTING ASSY - AILERON CONTROL		1
-30	41A-90421-2	...END FITTING - AILERON CONTROL		1
	BR4H	...BEARING - (V77896)		2
		OR		
	BR4	...BEARING - (V77896)		
	MS24692-111	..PIN		6
	41A-90099-26	.ROD ASSY - ELEVATOR CONT (FUS STA 263-296)		1
-31	41A-90099-226	..ROD - CONTROL		1
-32	SPH4-10C-1	..ROD END		1
	41A-90421	..END FITTING ASSY - AILERON CONTROL		1
-33	41A-90421-2	...END FITTING - AILERON CONTROL		1
	BR4H	...BEARING - (V77896)		2
		OR		
	BR4	...BEARING - (V77896)		
	MS24692-135	..PIN		6
R -34	NAS6204-14D	.BOLT		5
R -35	NAS6204-17D	.BOLT		1
R -36	NAS6204-13D	.BOLT		3
R -37	NAS6204-18D	.BOLT		4
R -38	NAS6204-16D	.BOLT		10
-39	AN960PD416L	.WASHER		3
	AN960PD416	.WASHER		20
	AN320-4	.NUT		23
	MS24665-136	.COTTER PIN		23
-40	41A-90443	LINK ASSY - AILERON CONTROL (SEE FIG. 63)		REF
-41	41A-90425	LEVER ASSY - FUS STA 260 AILERON CONTROL (SEE FIG. 63)		REF
-42	41A-90099-14	ROD ASSY - FUS STA 296-339 RUDDER CONTROL (SEE FIG. 77)		REF
-43	41A-90099-28	ROD ASSY - FUS STA 296-339 ELEVATOR CTL (SEE FIG. 77)		REF

-OOO-

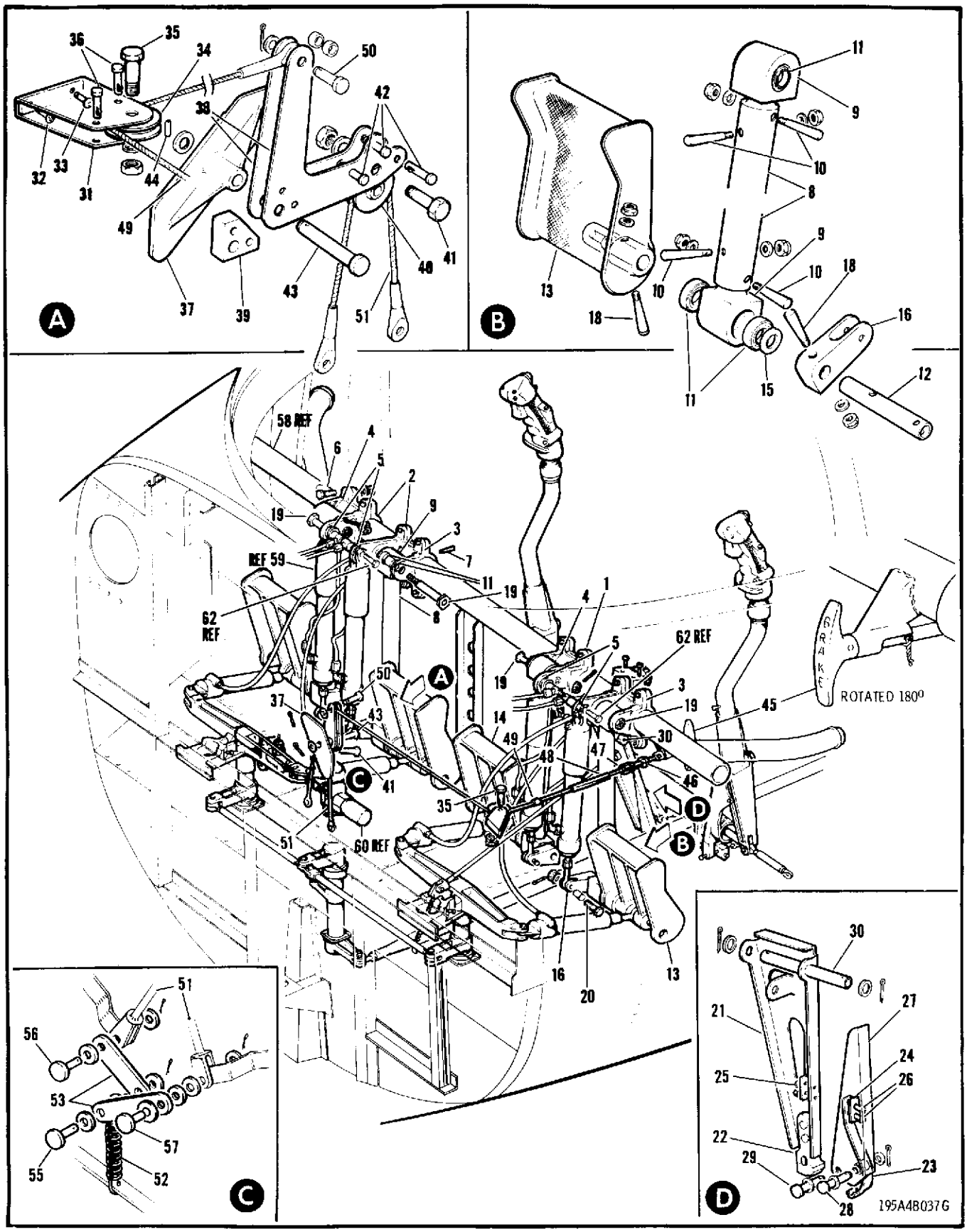

FIGURE 65 COCKPIT RUDDER & BRAKE CONTROLS

FIGURE AND INDEX NUMBER	GROUP	FLIGHT CONTROLS	EFFEC-TIVITY	UNITS PER ASSY
	MAJOR ASSEMBLY	COCKPIT RUDDER & BRAKE CONTROLS		
	PART NUMBER	1 2 3 4 5 6 7 NOMENCLATURE		
65 -	41A-90201	RUDDER & BRAKE CONTROLS INSTL - COCKPIT		NP
- 1	41A-90210-2	.BRACKET - RUDDER CONTROL ATT (LH)		1
- 2	41A-90212	.BRACKET - RUDDER CONTROL ATT (RH)		2
	41A-90211	.BRACKET ASSY - RUDDER CONTROL LH		2
	41A-90211-1	.BRACKET ASSY - RUDDER CONTROL RH		2
- 3	41A-90211-2	..BRACKET - RUDDER CONTROL LH		1
- 4	41A-90211-3	..BRACKET - RUDDER CONTROL RH		1
- 5	MS20201KP5A	..BEARING		1
R - 6	NAS6204-13	.BOLT		16
	AN960PD416	.WASHER		16
	MS21083N4	.NUT		16
- 7	AN386-2-18A	.PIN		4
	AN975-3	.WASHER		4
	MS21083N3	.NUT		4
	41A-90209-802	.PEDAL ASSY - RUDDER LH		2
	41A-90209-803	.PEDAL ASSY - RUDDER RH		2
	41A-90214	..ARM ASSY - RUDDER CONTROL PEDAL		1
- 8	41A-90214-2	...ARM - RUDDER CONTROL PEDAL		1
- 9	41A-90213	...ATTACHMENT - PEDAL ARM		2
-10	AN385A3P12	...PIN		4
-11	B539DD	...BEARING - (V21335)		4
-12	41A-90216	..SHAFT - RUDDER CONTROL		1
	41A-90215	..PEDAL ASSY - RUDDER CONTROL LH	001-120	1
	41A-90215-800	..PEDAL ASSY - RUDDER CONTROL LH	121-	1
	41A-90215-1	..PEDAL ASSY - RUDDER CONTROL RH	001-120	1
	41A-90215-801	..PEDAL ASSY - RUDDER CONTROL RH	121-	1
	41A-90215-2	...PEDAL - RUDDER CONTROL LH	001-120	1
-13	41A-90215-6	...PEDAL - RUDDER CONTROL LH	121-	1
	41A-90215-3	...PEDAL - RUDDER CONTROL RH	001-120	1
-14	41A-90215-7	...PEDAL - RUDDER CONTROL RH	121-	1
-15	NAS43DD12-6	..SPACER		1
-16	41A-90232-2	..LEVER - BRAKE CONTROL		1
-17		DELETED		
-18	AN386-1-11A	..PIN		2
	AN975-3	..WASHER		2
	MS21083N3	..NUT		2
-19	41A-90217	.BOLT - PEDAL ARM		4
	AN320-6	.NUT		4
	MS24665-368	.COTTER PIN		4
R -20	NAS6204-32D *	.BOLT - (PEDAL LEVER TO BRAKE CYLINDER)		4
	C70A47179-1 *	.SPACER		4
	AN960PD416L *	.WASHER		4
	AN320-4	.NUT		4
	MS24665-132	.COTTER PIN		4
	41A-90334	.LEVER ASSY - CONTROL LOCKING		1
	41A-90334-2	..CHANNEL ASSY - CONTROL LOCKING LEVER		1
-21	41A-90340-4	...CHANNEL - CONTROL LOCKING		1
-22	41A-90335	...ATTACHMENT - PAWL		1
	NAS528A6	...COLLAR		2
-23	41A-90340-6	...SPRING - CONTROL LOCKING		1
-24	41A-90340-8	..WASHER - THROAT		1
-25	41A-90340-10	..WASHER - THROAT		1
-26	NAS623-2-5W	..SCREW		2
	MS21083N08	..NUT		2
-27	41A-90340-2	..LEVER - CONTROL LOCKING		1
-28	S1225-5-80	..PIN - (V88308)		1
	NAS43HT2-39	..SPACER		1
	AN960PD8L	..WASHER		2
	MS24665-130	..COTTER PIN		1
	*	IAW C-12-114-000/CF-319		

FIGURE AND INDEX NUMBER	GROUP	FLIGHT CONTROLS	EFFEC-TIVITY	UNITS PER ASSY
	MAJOR ASSEMBLY	COCKPIT RUDDER & BRAKE CONTROLS		
	PART NUMBER	1 2 3 4 5 6 7 NOMENCLATURE		
65 -29	S1225-6-80	..PIN - (V88308)		1
	AN960PD10L	..WASHER		5
	MS24665-130	..COTTER PIN		1
-30	41A-90333	.TUBE - CONTROL LOCKING		1
	AN960PD616	.WASHER		2
	MS24665-132	.COTTER PIN		2
-31	41A-90336-2	.BRACKET ASSY - PARKING BRAKE		1
-32	NAS623-3-4	.SCREW		1
-33	NAS623-3-6	.SCREW		1
-34	MS20219A1	.PULLEY		1
R -35	NAS6204-9	.BOLT		1
	AN960PD416	.WASHER		1
	MS21083N4	.NUT		1
-36	NAS427K9	.PIN - (CABLE GUARD)		2
-37	41A-90327	.MOUNTING - PARKING BRAKE LEVER		1
	41A-90329	.LEVER ASSY - PARKING BRAKE		1
-38	41A-90336-8	..PLATE - (PARKING BRAKE LEVER)		2
-39	41A-90326	..SPACER - PARKING BRAKE		1
-40	MS20219A1	..PULLEY		1
R -41	NAS6204-9	..BOLT		1
	AN960PD416	..WASHER		1
	MS21083N4	..NUT		1
-42	NAS427K9	..PIN - (CABLE GUARD)		3
-43	MS20392-3C41	.PIN - (LEVER PIVOT)		1
	AN960PD416L	.WASHER		1
-44	NAS561P2-10	.PIN - (THROUGH PIVOT)		1
-45	41-90364	.HANDLE - PARKING BRAKE (PORT)		1
	NAS561P2-6	.PIN		1
-46	AN42B24A	.EYEBOLT		1
	NAS561P2-10	.PIN		1
	MS20995F41	.LOCKWIRE		AR
-47	NAS645-8LS	.FORK END		1
	MS20392-2C9	.PIN		1
	AN960PD10L	.WASHER		1
	MS24665-132	.COTTER PIN		1
-48	NAS649B8S	.BARREL		1
	NAS651-16S	.CLIP		1
-49	41A-90330	.CABLE ASSY - PARKING BRAKE		1
-50	MS20392-2C19	.PIN		1
	NAS43DD3-11	.SPACER		2
	AN960PD10L	.WASHER		1
	MS24665-132	.COTTER PIN		1
-51	41A-90328	.CABLE ASSY - PARKING BRAKE		1
-52	MS24586-96	.SPRING		1
-53	41A-90201-94	.LINK - (PARKING BRAKE CABLE)		2
-54		DELETED		
-55	MS20392-2C7	.PIN		1
-56	MS20392-2C11	.PIN		1
-57	MS20392-2C13	.PIN		1
	AN960PD10L	.WASHER		5
	AN960PD10	.WASHER		1
	MS24665-132	.COTTER PIN		3
-58	41A-35091-2	TUBE ASSY - WELDED CROSS (SEE SECTION 3)		REF
-59	70777	CYLINDER ASSY - MASTER BRAKE(SEE SECTION 8)		REF
-60	70775-1	VALVE ASSY - PARKING BRAKE (SEE SECTION 8)		REF
-61		DELETED		
-62	41A-75050-10	BOLT - (SEE SECTION 8)		REF

(CONTINUED SEE FIG. 66)

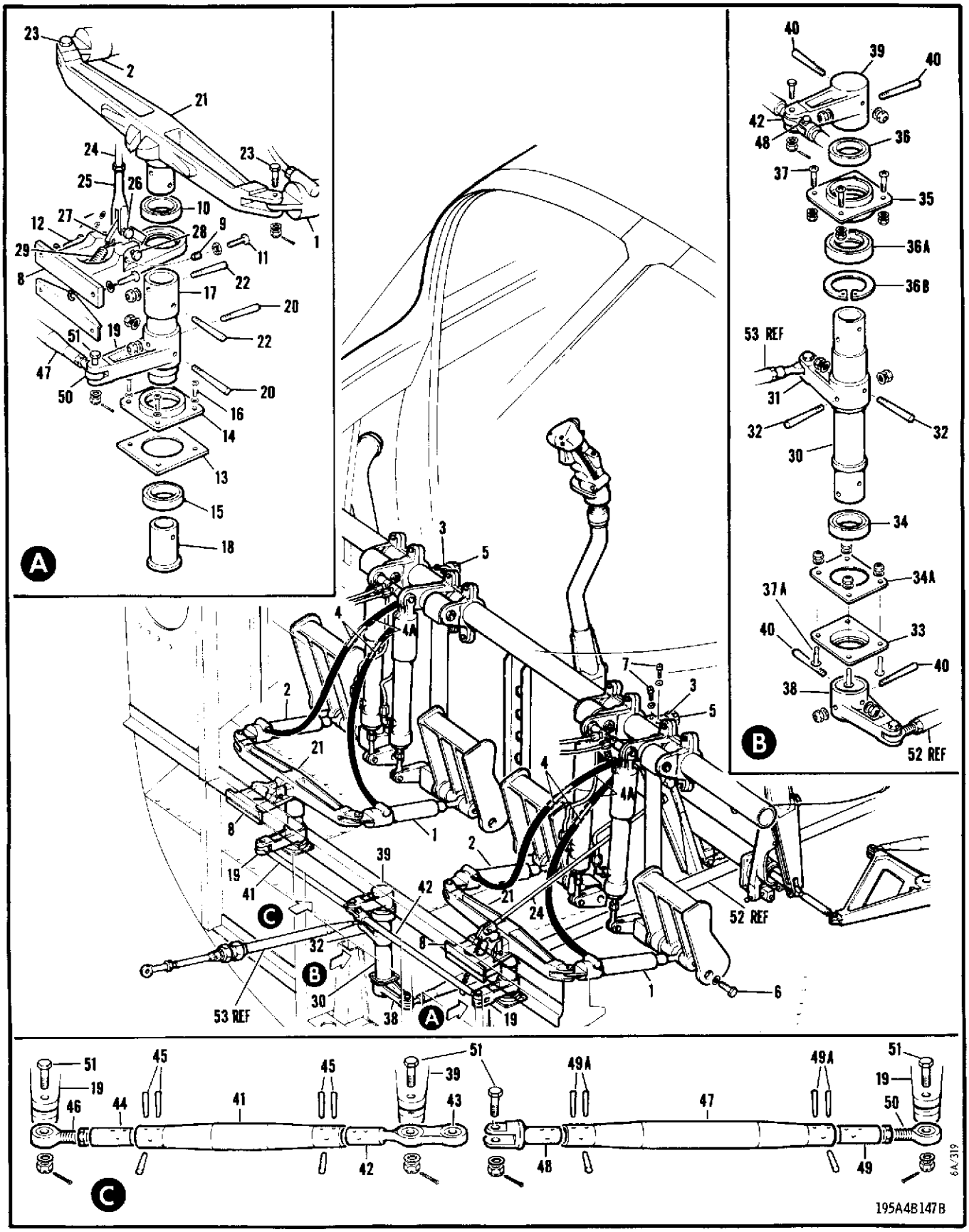

FIGURE 66 COCKPIT RUDDER & BRAKE CONTROLS

FIGURE AND INDEX NUMBER	GROUP		FLIGHT CONTROLS	EFFEC-TIVITY	UNITS PER ASSY
	MAJOR ASSEMBLY		COCKPIT RUDDER & BRAKES CONTROLS		
	PART NUMBER		1 2 3 4 5 6 7 NOMENCLATURE		
66 -	41A-90201		RUDDER & BRAKE CONTROLS INSTL - COCKPIT (SEE FIG. 65)		REF
	R819-2	*	.SCREW JACK ASSY - (V36123) (AS PER 41A-90208-806)		2
- 1	R532M30-21	*	..SCREW JACK ASSY - LH (V36123) (RUDDER)		1
- 2	R532M30-11	*	..SCREW JACK ASSY - RH (V36123) (RUDDER)		1
- 3	R1066-1	*	..GEARBOX ASSY - (V36123) (RUDDER PEDAL)		1
- 4	R196M40	*	..DRIVE - (V36123) (FLEXIBLE)		2
- 4A	NO NUMBER		..HOSE - STIFFENER (IAW C-12-114-000/CF-319)		
- 5	41A-90208-10	*	..KNOB - (V36123) (RUDDER PEDAL ADJUSTMENT)		1
- 6	41A-90201-93		.BOLT		4
	AN960PD416		.WASHER		4
- 7	AN501AD10-8		.SCREW - (GEARBOX)		4
	AN960PD10		.WASHER		4
	41-90530		.SUPPORT ASSY - RUDDER CONTROL		2
- 8	41-90530-2		..SUPPORT - RUDDER CONTROL		1
- 9	MS21209F5-15		..INSERT		2
-10	B542DD		..BEARING - (V21335)		1
-11	NAS428H5-14		.BOLT		4
	NAS509-5		.NUT		4
R -12	NAS6204-10		.BOLT		4
	AN960PD416		.WASHER		4
-13	41-90533		.SPACER - BEARING		2
-14	41-90532		.HOUSING - BEARING		2
-15	B542DD		.BEARING - (V21335)		2
-16	NAS623-3-5W		.SCREW - (HOUSING)		8
	AN960PD10		.WASHER		8
-17	41A-90222-2		.SHAFT - COCKPIT RUDDER CONTROL		2
-18	41-90534		.RETAINER - BEARING		2
-19	41A-90221-2		.LEVER - COCKPIT RUDDER CONTROL		2
-20	AN386-1-15A		.PIN		4
	AN975-3		.WASHER		4
	MS21083N3		.NUT		4
-21	41A-90225		.T-FITTING - (LEVER)		2
-22	AN386-1-12A		.PIN		4
	AN975-3		.WASHER		4
	MS21083N3		.NUT		4
-23	NAS464P4-17		.BOLT		4
	AN960PD416		.WASHER		4
	AN320-4		.NUT		4
	MS24665-132		.COTTER PIN		2
	41A-90339		.ROD ASSY - CONTROL LOCKING (PORT)		1
-24	41A-90338		..ROD - CONTROL LOCKING		1
-25	MS27975-2		..FORK END		2
	NAS509-4		..NUT		2
-26	MS20392-3C11		.PIN - (ROD PIVOT)		2
	AN960PD416L		.WASHER		2
	MS24665-132		.COTTER PIN		2
-27	41-90531		.PLATE - GUST LOCK (PORT)		1
-28	MS20392-3C45		.PIN - (PLATE PIVOT PORT)		1
	AN960PD416L		.WASHER		1
	MS24665-132		.COTTER PIN		1
-29	41A-90367		.SPRING - GUST LOCK EXTENSION (PORT)		1
-30	41A-90228		.SHAFT - RUDDER CONTROL CENTRE		1
-31	41A-90233-2		.LEVER - NOSE WHEEL STEERING		1
-32	AN386-1-14A		.PIN		2
	AN975-3		.WASHER		1
	MS21083N3		.NUT		1
	41A-90227		.HOUSING ASSY - BEARING		1
-33	41A-90227-2		..HOUSING - BEARING		1
-34	B542DD		..BEARING - (V21335)		1
-34A	41A-90201-84		.SHIM		AR
		*	FOR BRKDN SEE C-13-B59-000/MS-000		

FIGURE AND INDEX NUMBER	GROUP	FLIGHT CONTROLS	EFFEC-TIVITY	UNITS PER ASSY
	MAJOR ASSEMBLY	COCKPIT RUDDER & BRAKES CONTROLS		
	PART NUMBER	1 2 3 4 5 6 7 NOMENCLATURE		
66	41A-90226	.HOUSING ASSY - BEARING		1
-35	41A-90226-2	..HOUSING - BEARING		1
-36	B542DD	..BEARING - (V21335)		1
-36A	63X565	..SEAL - (V08479)		1
-36B	MS16625-212	..RING - RETAINING		1
-37	NAS623-3-3W	.SCREW		4
-37A	NAS623-3-4W	.SCREW		4
	AN960PD10	.WASHER		8
	MS21083N3	.NUT		8
-38	41A-90221-6	.LEVER - RUDDER CONTROL		1
-39	41A-90221-4	.LEVER - RUDDER CONTROL		1
-40	AN386-1-15A	.PIN		4
	AN975-3	.WASHER		3
	MS21083N3	.NUT		4
	41A-90099-4	.ROD ASSY - CONTROL		1
	41A-90099-104	..ROD ASSY - CONTROL		1
-41	41A-90099-204	...ROD - CONTROL		1
	41A-90421	...END FITTING ASSY - AILERON CONTROL		1
-42	41A-90421-2	....END FITTING - AILERON CONTROL		1
-43	BR4H	....BEARING - (V77896)		2
		OR		
	BR4	....BEARING - (V77896)		
-44	41A-90103	...INSERT - CONTROL ROD		1
-45	MS24692-111	...PIN		6
-46	ST4AR	..ROD END - (V77896)		1
	NAS509-6	..NUT		1
	41A-90099-2	.ROD ASSY - CONTROL		1
	41A-90099-102	..ROD ASSY - CONTROL		1
-47	41A-90099-202	...ROD - CONTROL		1
-48	41A-90440	...END FITTING - FLIGHT CONTROL		1
-49	41A-90103	...INSERT - CONTROL ROD		1
-49A	MS24692-111	...PIN		6
-50	ST4AR	..ROD END - (V77896)		1
	NAS509-6	..NUT		1
R -51	NAS6204-16D	.BOLT		4
	AN960PD416L	.WASHER		AR
	AN960PD416	.WASHER		4
	AN320-4	.NUT		4
	MS24665-132	.COTTER PIN		4
-52	41A-90099-6	ROD ASSY - FUS STA 154-208 RUDDER CONTROL (SEE FIG. 64)		REF
-53	41A-90378	BUNGEE ASSY - NOSE WHEEL STEERING (SEE SECTION 4)		REF

-OOO-

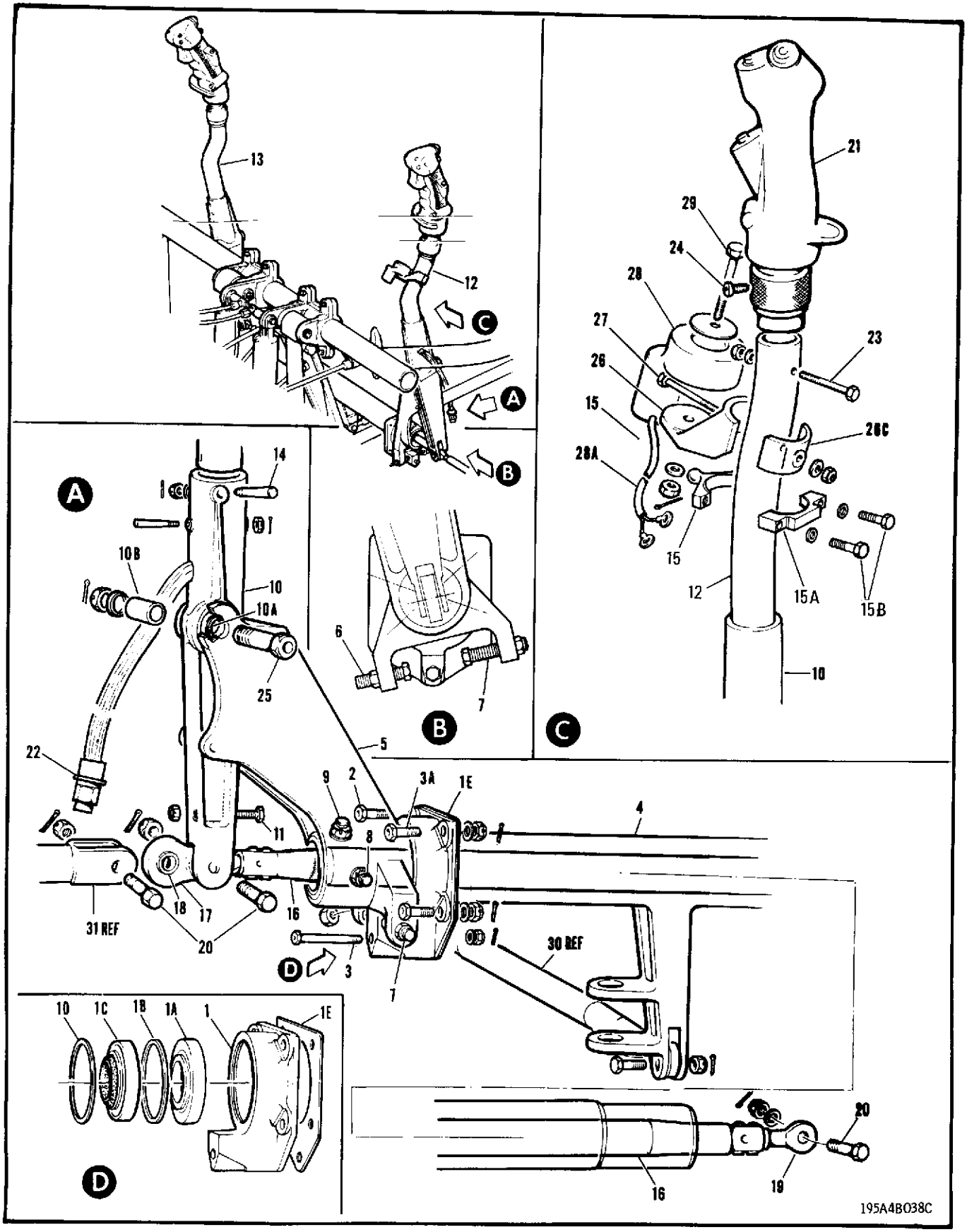

FIGURE 67 CONTROL COLUMN

FIGURE AND INDEX NUMBER	GROUP	FLIGHT CONTROLS	EFFEC-TIVITY	UNITS PER ASSY
	MAJOR ASSEMBLY	CONTROL COLUMN		
	PART NUMBER	1 2 3 4 5 6 7 NOMENCLATURE		
67 -	41A-90151-806	CONTROL COLUMN ASSY (FOR SPARES ORDER 41A-90151-808) (SEE FIG. 63)		1
	41A-90151-808	CONTROL COLUMN - (SPARE FOR 41A-90151-806)		
	41A-90152	.BEARING ASSY - CONTROL COLUMN		2
- 1	41A-90152-2	..HOUSING - CONTROL COLUMN BEARING		1
- 1A	MS27648-33	..BEARING		1
- 1B	41A-90153	..SPACER - CONTROL COLUMN BEARING		1
- 1C	63X1327	..SEAL - (V08479)		1
- 1D	MS16625-1300	..RING - (RETAINING)		1
- 1E	41A-90159	.SHIM - CONTROL COLUMN		AR
R - 2	NAS6204-8D	.BOLT		4
R - 3	NAS6204-34D	.BOLT		2
		OR		
	AN4-24	.BOLT		
R - 3A	NAS6204-7D	.BOLT		4
	AN960PD416	.WASHER		10
	AN310-4	.NUT		10
	MS24665-136	.COTTER PIN		10
- 4	41A-90155	.SHAFT - ELEVATOR TORQUE		1
	41A-90154	.FORK ASSY - CONTROL COLUMN		2
- 5	41A-90154-2	..FORK - CONTROL COLUMN		1
	MS21209F5-15	..INSERT		2
- 6	NAS428-5-20	.BOLT - (FORK ADJUSTER)		2
		OR		
	NAS428H5-20	.BOLT - (FORK ADJUSTER)		
- 7	NAS428-5-12	.BOLT - (FORK ADJUSTER)		2
		OR		
	41A-90151-950	.BOLT - (FORK ADJUSTER)		
	MS21042L5	.NUT		4
- 8	NAS1105-8D	.BOLT		4
- 9	41A-90151-100	.BOLT		4
	AN960PD516	.WASHER - (UNDER NUT)		8
	AN320-5	.NUT		8
	MS24665-132	.COTTER PIN		8
	41A-90157	.LEVER ASSY - CONTROL COLUMN		2
-10	41A-90157-2	..LEVER - CONTROL COLUMN		1
-10A	MS27641-10	..BEARING		2
-10B	NAS43-10-102	..SPACER - (BEARING)		1
-11	NAS428H5-20	..BOLT - (ADJUSTER)		1
-11	MS21042L5	..NUT		1
-12	41A-90156-800 *	.TUBE - CONTROL COLUMN LH		1
-13	41A-90156-1	.TUBE - CONTROL COLUMN RH		1
-14	AN386-1-13	.PIN		4
	AN975-3	.WASHER		4
	AN320-3	.NUT		4
	MS24665-132	.COTTER PIN		4
-15	41G-90010-2 *	.SPIGOT - CONTROL COLUMN LOCKING LH		1
-15A	41G-90010-4 *	.SPIGOT - CONTROL COLUMN LOCKING LH		1
-15B	MS20073-03-10 *	.BOLT		2
	AN960-10L *	.WASHER		2
	41A-90099-58	.ROD ASSY - CONTROL		1
	41A-90099-158	..ROD ASSY - CONTROL		1
-16	41A-90099-258	...ROD - CONTROL		1
	41A-90449	...END FITTING ASSY - AILERON CONTROL		1
-17	41A-90449-2	....END FITTING - AILERON CONTROL		1
-18	B4	....BEARING - (V77896)		2
	41A-90103	...INSERT - FLIGHT CONTROL ROD		1
	MS24692-111	...PIN		6
-19	ST4BR3	..ROD END - (V77896)		1
	NAS509-6	..NUT		1
	*	CONTROL COLUMN LH TUBE SPARE DETAILS, ORDER AS 41A-90151-810 SPARE ASSY		

	FIGURE AND INDEX NUMBER	GROUP: FLIGHT CONTROLS MAJOR ASSEMBLY: CONTROL COLUMN PART NUMBER	1 2 3 4 5 6 7 NOMENCLATURE	EFFEC-TIVITY	UNITS PER ASSY
R	67 -20	NAS6204-13D	.BOLT		3
		AN960PD416	.WASHER		3
		AN310-4	.NUT		3
		MS24665-136	.COTTER PIN		3
		41A-57132	.HARNESS ASSY - P7 TO STICK GRIP DISCONNECT		2
	-21	G56679	..GRIP ASSY - TYPE B8A		2
		S1244B11-41	..CONDUIT - (V88308)		1
	-22	PT06SE14-19P	..PLUG - (V77820) (P7 DISCONNECT)		1
	-23	NAS1003-19H	.BOLT		2
		S1324-3-20	.WASHER - (V88308)		2
		MS21043-3	.NUT		2
	-24	AN502-10-4	.SCREW		2
	-25	41A-90158	.BOLT - CONTROL COLUMN		2
		AN960PD1016	.WASHER		2
		AN320-10	.NUT		2
		MS24665-357	.COTTER PIN		2
	-26	41A-90236-6	.BRACKET - CONTROL SHAKER MOUNTING		1
	-26A		DELETED		
	-26B		DELETED		
	-26C	41A-90236-4	.CLAMP - CONTROL SHAKER MTG BRACKET		1
	-27	NAS1204-25	.BOLT		1
		AN960PD416	.WASHER		1
		MS21043-4	.NUT		1
		41A-90151-55	.SHAKER ASSY - CONTROL		1
	-28	C75502	..SHAKER - (V83326) (CONTROL) (AS PER 41A-50700-6) FOR BKDN SEE C-17-749-000/MN-000		1
	-28A	S1244B19-30	..CONDUIT - (V88308)		1
R	-29	NAS6204-34D	.BOLT		1
		41A-90151-51	.WASHER		1
		AN960PD416	.WASHER		1
		AN310-4	.NUT		1
		MS24665-136	.COTTER PIN		1
	-30	41A-90099-20	ROD ASSY - FUS STA 181-208 ELEVATOR CONTROL (SEE FIG. 64)		REF
	-31	41A-90443	LINK ASSY - AILERON CONTROL (SEE FIG. 63)		REF

-OOO-

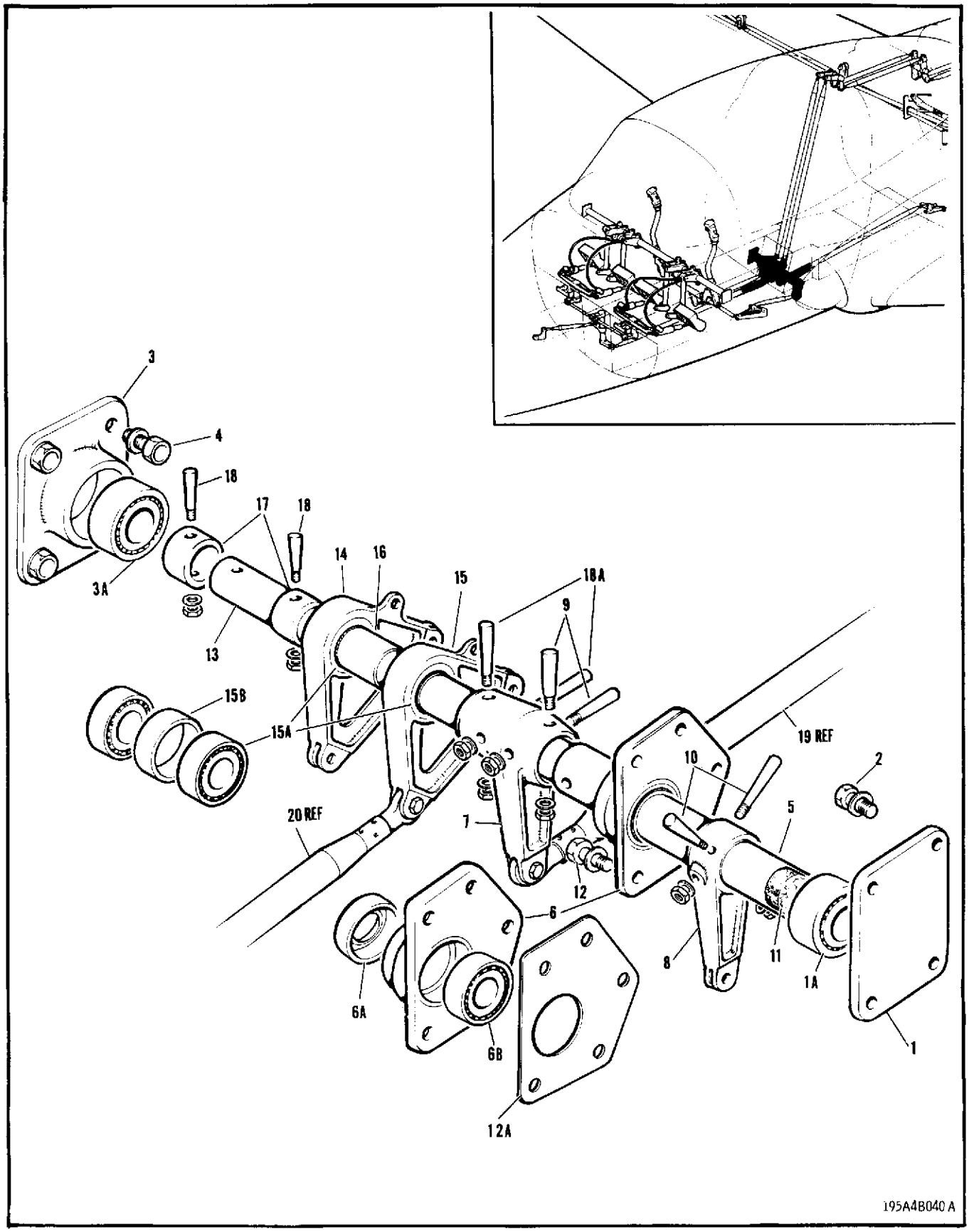

FIGURE 68 COCKPIT FLIGHT CONTROL LEVERS

	FIGURE AND INDEX NUMBER	GROUP	FLIGHT CONTROLS	EFFEC-TIVITY	UNITS PER ASSY
		MAJOR ASSEMBLY	COCKPIT FLIGHT CONTROL LEVERS		
		PART NUMBER	1 2 3 4 5 6 7 NOMENCLATURE		
	68 -	41A-90435	LEVER INSTL - FUS STA 208 FLIGHT CONTROL (SEE FIG. 63)		NP
		41A-90414	.HOUSING ASSY - AIL TORQUE SHAFT BEARING		1
	- 1	41A-90414-2	..HOUSING - AILERON TORQUE SHAFT BEARING		1
	- 1A	MS27648-25	..BEARING		1
R	- 2	NAS6204-6	.BOLT		4
		AN960PD416	.WASHER		4
		41A-90412	.HOUSING ASSY - FUS STA 208 FLIGHT CTL BRG		1
	- 3	41A-90412-2	..HOUSING - FUS STA 208 FLIGHT CTL BEARING		1
	- 3A	MS27648-21	..BEARING		1
R	- 4	NAS6204-8	.BOLT		4
		AN960PD416	.WASHER		4
		41A-90432	.SHAFT ASSY - FUS STA 208 AIL CTL TORQUE		1
	- 5	41A-90428	..SHAFT - FUS STA 208 AIL CONTROL TORQUE		1
		41A-90416	..HOUSING ASSY - AIL. TORQUE SHAFT BEARING		1
	- 6	41A-90416-2	...HOUSING - AILERON TORQUE SHAFT BEARING		1
	- 6A	63X700	...SEAL - (V08479)		1
	- 6B	MS27648-25	...BEARING		1
	- 7	41A-90404	..LEVER - FUS STA 208 AILERON CONTROL		1
	- 8	41A-90411	..LEVER - FUS STA 208 AILERON CONTROL		1
	- 9	AN386-2-16A	..PIN		2
	-10	AN386-2-18A	..PIN		2
		AN975-3	..WASHER		4
		MS21042L3	..NUT		4
	-11	41A-90432-10	..CORK - AILERON TORQUE SHAFT SEALING		1
R	-12	NAS6204-8	.BOLT		5
		AN960PD416L	.WASHER		5
	-12A	41A-90435-16	.SHIM - FLIGHT CONT LEVERBEARING HOUSING		AR
	-13	41A-90431-2	.SHAFT - FUS STA 208 FLIGHT CONTROL		1
		41A-90429-2	.LEVER ASSY - FUSELAGE STA 208 FLIGHT CONTROL (ELEVATOR)		1
		41A-90429-4	.LEVER ASSY - FUSELAGE STA 208 FLIGHT CONTROL (RUDDER)		1
	-14	41A-90429-6	..LEVER - FUS STA 208 FLIGHT CTL (ELEVATOR)		1
	-15	41A-90429-8	..LEVER - FUS STA 208 FLIGHT CTL (RUDDER)		1
	-15A	B542DD	..BEARING - (V21335)		2
	-15B	41A-90430-4	..SPACER - FLIGHT CONTROL (LEVER)		1
	-16	41A-90430-6	.SPACER - FLIGHT CONTROL (LEVER)		1
	-17	41A-90430-2	.SPACER - FLIGHT CONTROL (LEVER)		2
	-18	AN386-1-12A	.PIN		2
		AN975-3	.WASHER		4
		MS21042L3	.NUT		4
	-18A	AN386-2-15A	.PIN		2
	-19	41A-90099-38	ROD ASSY - FUS STA 208-262 AILERON CONTROL (SEE FIG. 64)		REF
	-20	41A-90099-6	ROD ASSY - FUS STA 154-208 RUDDER CONTROL (SEE FIG. 64)		REF

-OOO-

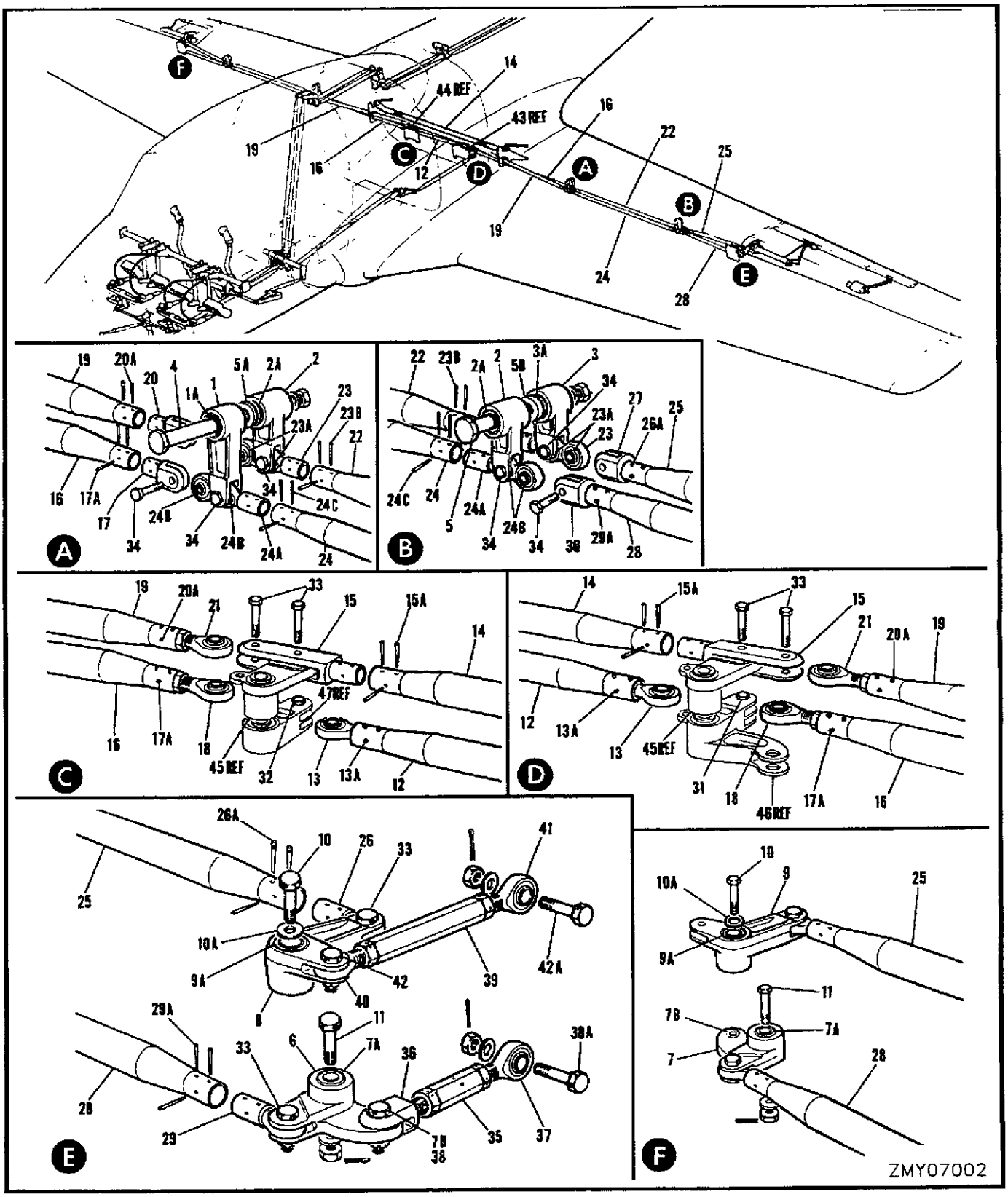

FIGURE 69 AILERON CONTROLS

FIGURE AND INDEX NUMBER	GROUP / MAJOR ASSEMBLY / PART NUMBER	FLIGHT CONTROLS / AILERON CONTROLS / 1 2 3 4 5 6 7 NOMENCLATURE	EFFEC-TIVITY	UNITS PER ASSY
69 -	41A-90651-800	AILERON CONTROL INSTL - WING PORT (SEE SECTION I)		NP
	41A-90651-801	AILERON CONTROL INSTL - WING STBD		NP
	41A-90652	.LEVER ASSY - WING STA 60 AILERON CONTROL		1
- 1	41A-90652-2	..LEVER - WING STA 60 AILERON CONTROL		1
	41A-90430-30	..SPACER - FLIGHT CONTROL		1
- 1A	B538DD	..BEARING - (V21335)		2
	41A-90653	.LEVER ASSY - WING STA 60 & 105 AIL CTL		2
- 2	41A-90653-2	..LEVER - WING STA 60 & 105 AILERON CONTROL		1
	41A-90430-32	..SPACER - FLIGHT CONTROL		1
- 2A	B538DD	..BEARING - (V21335)		2
	41A-90655	.LEVER ASSY - WING STA 105 AILERON CONTROL		1
- 3	41A-90655-2	..LEVER - WING STA 105 AILERON CONTROL		1
	41A-90430-34	..SPACER - FLIGHT CONTROL		1
- 3A	B538DD	..BEARING - (V21335)		2
- 4	41A-90654-8	.BOLT - WING AILERON CONTROL (STA 60)		1
- 5	41A-90654-6	.BOLT - WING AILERON CONTROL (STA 105)		1
- 5A	NAS43DD10-17	.SPACER - (WING STA 60)		1
- 5B	NAS43DD10-7	.SPACER - (WING STA 105)		1
	AN960PD416	.WASHER		2
	NAS509-6	.NUT		2
	41A-90657	.LEVER ASSY - WING STA 129 AILERON CTL LH		1
	41A-90657-1	.LEVER ASSY - WING STA 129 AILERON CTL RH		1
- 6	41A-90657-2	..LEVER - WING STA 129 AILERON CONTROL LH		1
- 7	41A-90657-3	..LEVER - WING STA 129 AILERON CONTROL RH		1
	41A-90430-40	..SPACER - FLIGHT CONTROL		1
- 7A	MS24461-6	..BEARING		2
- 7B	BR4H	..BEARING - (V77896)		1
		OR		
	BR4	..BEARING - (V77896)		
	41A-90658-800	.LEVER ASSY - WING STA 129 AILERON CTL LH		1
	41A-90658-801	.LEVER ASSY - WING STA 129 AILERON CTL RH		1
- 8	41A-90658-2	..LEVER - WING STA 129 AILERON CONTROL LH		1
- 9	41A-90658-3	..LEVER - WING STA 129 AILERON CONTROL RH		1
	41A-90430-46	..SPACER - FLIGHT CONTROL		1
- 9A	B538DD	..BEARING - (V21335)		2
-10	41A-90659-2	.BOLT - WING STA 129 AILERON CONTROL		1
-10A	41A-90651-950	.SHIM - WING AILERON CONTROL LEVER (UPPER)		AR
	41A-90651-952	.SHIM - WING AILERON CONTROL LEVER (LOWER)		AR
-11	NAS1106-32D	.BOLT - (WING STA 129)		1
	AN960PD616	.WASHER		2
	AN320-6	.NUT		2
	MS24665-283	.COTTER PIN		2
	41A-90099-42	.ROD ASSY - FUSELAGE STA 289 CTL (LOWER)		1
-12	41A-90099-242	..ROD - FUSELAGE STA 289 CONTROL (LOWER)		1
-13	SPH4-10C-1	..ROD END		2
-13A	MS24692-108	..PIN		6
	41A-90099-50	.ROD ASSY - FUSELAGE STA 289 CTL (UPPER)		1
-14	41A-90099-250	..ROD - FUSELAGE STA 289 CONTROL (UPPER)		1
-15	41A-90453	..FORK - FUS STA 289 AILERON CONTROL		2
-15A	MS24692-135	..PIN		6
R	41A-90099-52	.ROD ASSY - BELLCRANK TO WING STA 60 CTL		1
-16	41A-90099-152	..ROD ASSY - BELLCRANK TO WING STA 60 CTL		1
	41A-90099-252	...ROD - BELLCRANK TO WING STA 60 CTL		1
-17	41A-90440	...END FITTING - FLIGHT CONTROL		1
	41A-90103-4	...INSERT - FLIGHT CONTROL ROD		1
-17A	MS24692-111	...PIN		6
-18	ST4AR	..ROD END - (V77896)		1
	NAS509-6	..NUT		1
R	41A-90099-44	.ROD ASSY - BELLCRANK TO WING STA 60 CTL		1
-19	41A-90099-144	..ROD ASSY - BELLCRANK TO WING STA 60 CTL		1
	41A-90099-244	...ROD - BELLCRANK TO WING STA 60 CTL		1

FIGURE AND INDEX NUMBER	GROUP	FLIGHT CONTROLS	EFFEC-TIVITY	UNITS PER ASSY
	MAJOR ASSEMBLY	AILERON CONTROLS		
	PART NUMBER	1 2 3 4 5 6 7 NOMENCLATURE		
69 -20	41A-90440	...END FITTING - FLIGHT CONTROL		1
	41A-90103-4	...INSERT - FLIGHT CONTROL ROD		1
-20A	MS24692-138	...PIN		6
-21	ST4BR	..ROD END - (V77896)		1
	NAS509-6	..NUT		1
	41A-90099-46	.ROD ASSY - WING STA 60-105 CONTROL (REAR)		1
-22	41A-90099-246	..ROD - WING STA 60-105 CONTROL (REAR)		1
	41A-90421	..END FITTING ASSY - AILERON CONTROL		2
-23	41A-90421-2	...END FITTING - AILERON CONTROL		1
-23A	BR4H	...BEARING - (V77896)		2
-23B	MS24692-111	..PIN		6
	41A-90099-54	.ROD ASSY - WING STA 60-105 CONTROL (FWD)		1
-24	41A-90099-254	..ROD - WING STA 60-105 CONTROL		1
	41A-90421	..END FITTING ASSY - AILERON CONTROL		2
-24A	41A-90421-2	...END FITTING - AILERON CONTROL		1
-24B	BR4H	...BEARING - (V77896)		2
-24C	MS24692-138	..PIN		6
	41A-90099-48	.ROD ASSY - WING STA 105-129 CONTROL (AFT)		1
	41A-90099-148	..ROD ASSY - WING STA 105-129 CONTROL		1
-25	41A-90099-248	...ROD - WING STA 105-129 CONTROL		1
-26	SPH4-10C-1	...ROD END		1
	41A-90103	...INSERT - FLIGHT CONTROL ROD		1
-26A	MS24692-111	...PIN		6
-27	41A-90439	..END FITTING - FLIGHT CONTROL		1
	NAS509-6	..NUT		1
	41A-90099-56	.ROD ASSY - WING STA 105-129 CTL (FORWARD)		1
	41A-90099-156	..ROD ASSY - WING STA 105-129 CONTROL		1
-28	41A-90099-256	...ROD - WING STA 105-129 CONTROL		1
-29	SPH4-10C-1	...ROD END		1
	41A-90103	...INSERT - FLIGHT CONTROL ROD		1
-29A	MS24692-132	...PIN		6
-30	41A-90439	..END FITTING - FLIGHT CONTROL		1
	NAS509-6	..NUT		1
R -31	NAS6204-26D	.BOLT		1
R -32	NAS6204-24D	.BOLT		1
R -33	NAS6204-13D	.BOLT		4
-34	NAS6204-15D	.BOLT		8
	AN960PD416	.WASHER		14
	AN320-4	.NUT		14
	MS24665-132	.COTTER PIN		14
	41A-90662	.ROD ASSY - WING AILERON CONTROL		1
-35	41A-90664	..BARREL - WING AILERON CONTROL		1
-36	41A-90663	..END FITTING - WING AILERON CONTROL		1
	NAS509-5	..NUT		1
-37	ADNEL4J	..ROD END - (V83086)		1
	NAS509L5	..NUT		1
-38	41A-90651-84	.BOLT		1
	AN960PD10L	.WASHER		1
R -38A	NAS6204-16D	.BOLT		1
	AN960PD416	.WASHER		1
	AN320-4	.NUT		2
	MS24665-132	.COTTER PIN		2
	41A-90660-4	.ROD ASSY - AILERON CONTROL		1
-39	41A-90660-12	..BARREL - AILERON CONTROL ROD		1
-40	ADNE4JW	..ROD END - (V83086)		1
	NAS509-5	..NUT		1
-41	ADNEL4J	..ROD END - (V83086)		1
	NAS509L5	..NUT		1
R -42	NAS6204-13D	.BOLT		1
R -42A	NAS6204-11D	.BOLT		1
	AN960PD416	.WASHER		2
	AN320-4	.NUT		2
	MS24665-132	.COTTER PIN		2

FIGURE AND INDEX NUMBER	GROUP	FLIGHT CONTROLS	EFFEC-TIVITY	UNITS PER ASSY
	MAJOR ASSEMBLY	AILERON CONTROLS		
	PART NUMBER	1 2 3 4 5 6 7 NOMENCLATURE		
69 -43	41A-90415	BRACKET - FUSELAGE STA 285 AIL CONTROL LH (SEE FIG. 63)		REF
-44	41A-90436	BRACKET - FUSELAGE STA 285 AIL CONTROL RH (SEE FIG. 63)		REF
-45	41A-90422	LEVER ASSY - FUSELAGE STA 285 AIL CONTROL (SEE FIG. 63)		REF
-46	41A-90419	LEVER ASSY - FUSELAGE STA 285 AIL CONTROL (SEE FIG. 63)		REF
-47	41A-90424	IDLER ASSY - FUSELAGE STA 285 AIL CONTROL (SEE FIG. 63)		REF
		-000-		

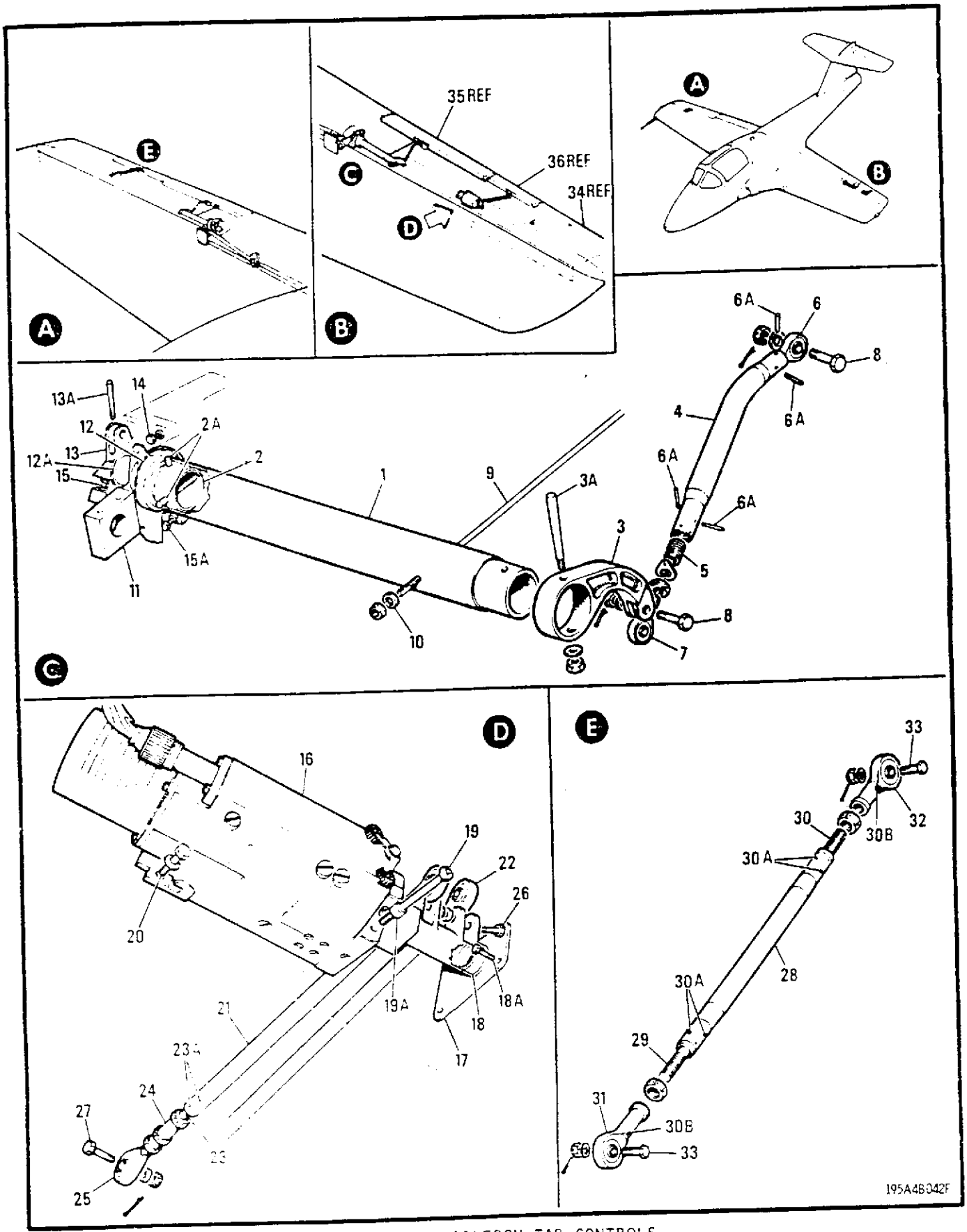

FIGURE 70 AILERON TAB CONTROLS

FIGURE AND INDEX NUMBER	GROUP	FLIGHT CONTROLS	EFFEC-TIVITY	UNITS PER ASSY
	MAJOR ASSEMBLY	AILERON TAB CONTROLS		
	PART NUMBER	1 2 3 4 5 6 7 NOMENCLATURE		
70 -	41A-90701-800	TAB CONTROL INSTL - AILERON LH (SEE SECTION 1)		NP
	41A-90701-801	TAB CONTROL INSTL - AILERON RH		NP
	41A-90730	.TUBE ASSY - AILERON SPRING TAB TORQUE		1
- 1	41A-90730-2	..TUBE - AILERON SPRING TAB TORQUE		1
- 2	41A-90729	..END FITTING		1
- 2A	S1224-3-16	..PIN - (V88308)		2
- 3	41A-90727	.LEVER - AILERON SPRING TAB		1
- 3A	AN386-2-16A	.PIN		1
	AN975-3	.WASHER		1
	MS21083N3	.NUT		1
	41A-90725-12	.ROD ASSY - AILERON SPRING TAB		1
- 4	41A-90725-16	..ROD ASSY - AILERON SPRING TAB		1
	41A-90725-14	...ROD - AILERON SPRING TAB		1
- 5	41A-90725-6	...INSERT - AILERON SPRING TAB ROD		1
R - 6	MS21152-7	...ROD END		1
- 6A	AN385-30-7	...PIN		4
- 7	41A-90726	..END FITTING		1
	NAS513-5	..WASHER		1
	NAS509-5	..NUT		1
- 8	NAS1103-10D	.BOLT		2
	AN960PD10	.WASHER		2
	AN320-3	.NUT		2
	MS24665-132	.COTTER PIN		2
- 9	41A-90732	.ROD - SPRING		1
-10	S1324-3-13	.WASHER - (V88308)		1
	MS21083N3	.NUT		1
	41A-90712	.HOUSING ASSY - INBD AILERON HINGE BEARING		1
-11	41A-90712-2	..HOUSING - INBOARD AILERON HINGE BEARING		1
-12	MS27648-16	..BEARING - (V21335)		1
-12A	S1236-1216	.WASHER - (V88308)		AR
-13	41A-90731	.LEVER - AILERON SPRING TAB		1
-13A	AN386-1-12A	.PIN		1
	AN975-3	.WASHER		1
	MS21083N3	.NUT		1
-14	NAS428H3-7	.BOLT - (ADJUSTMENT)		2
	41A-90701-4	.NUT		2
-15	NAS428KH4-10	.BOLT - (ADJUSTMENT)		1
-15A	NAS428KH4-6	.BOLT - (ADJUSTMENT)		1
	NAS509-4	.NUT		2
	41A-90717	.ACTUATOR INSTL - AILERONTRIM TAB (PORT)		NP
-16	R422M22-3	..ACTUATOR ASSY - (V36123) (AILERON TRIM TAB) (IAW 41A-90702-22) FOR BRKDN SEE C-17-695-000/MS-000		1
	41A-90722	..BEARING ASSY - AILERON TRIM ACTUATOR		1
-17	41A-90722-2	...HOUSING - TRIM ACTUATOR BEARING		
-18	AA6344	...BEARING - (V70417)		1
-18A	NAS1103-4	..BOLT		4
-19	41A-90717-2	..SCREW		2
-19A	NAS43DD4-7	..SPACER		2
-20	AN4-4A	..SCREW		2
	AN960PD416	..WASHER		2
	41A-90718	..ROD ASSY - AILERON TRIM TAB		2
-21	41A-90718-2	...ROD - AILERON TRIM TAB		1
-22	41A-90720	...ROD END ASSY - AILERON TRIM TAB		1
	41A-90720-2	....ROD END - AILERON TRIM TAB		1
	HSBG3	....BEARING - (V97613)		1
-23	41A-90721	...ROD END - AILERON TRIM TAB		1
-23A	MS24692-105	...PIN		4
-24	41A-90719	...BARREL - AILERON TRIM TAB ROD		1
	NAS509-6	...NUT		1
-25	HRBML3EFN	...ROD END - (V97613)		1
	NAS509L5	...NUT		1

FIGURE AND INDEX NUMBER	GROUP	FLIGHT CONTROLS	EFFEC-TIVITY	UNITS PER ASSY
	MAJOR ASSEMBLY	AILERON TAB CONTROLS		
	PART NUMBER	1 2 3 4 5 6 7 NOMENCLATURE		
70 -26	NAS1103-7D	..BOLT		2
-27	NAS1103-11D	..BOLT		2
	AN960PD10	..WASHER		4
	AN320-3	..NUT		4
	MS24665-151	..COTTER PIN		4
	41A-90707	ROD INSTL - GEAR TAB CONTROL (STBD) (SEE SECTION 1)		NP
	41A-90602	.ROD ASSY - AILERON GEAR TAB		2
-28	41A-90602-14	..ROD - AILERON GEAR TAB		1
-29	41A-90602-26	..ROD END - AILERON GEAR TAB		1
-30	41A-90602-28	..ROD END - AILERON GEAR TAB		1
-30A	MS24692-102	..PIN		4
	NAS509-4	..NUT		1
	NAS509L4	..NUT		1
-30B	MS9048-036	..PIN		2
-31	41A-90602-6	..END FITTING		1
-32	41A-90602-8	..END FITTING		1
-33	NAS1103-11D	.BOLT		4
	AN960-10L	.WASHER		4
	AN320-3	.NUT		4
	MS24665-134	.COTTER PIN		4
-34	41A-13102	AILERON ASSY - (SEE SECTION 1)		REF
-35	41A-13103	SPRING TAB ASSY - (SEE SECTION 1)		REF
-36	41A-13104	AILERON TRIM TAB ASSY - (SEE SECTION 1)		REF

-000-

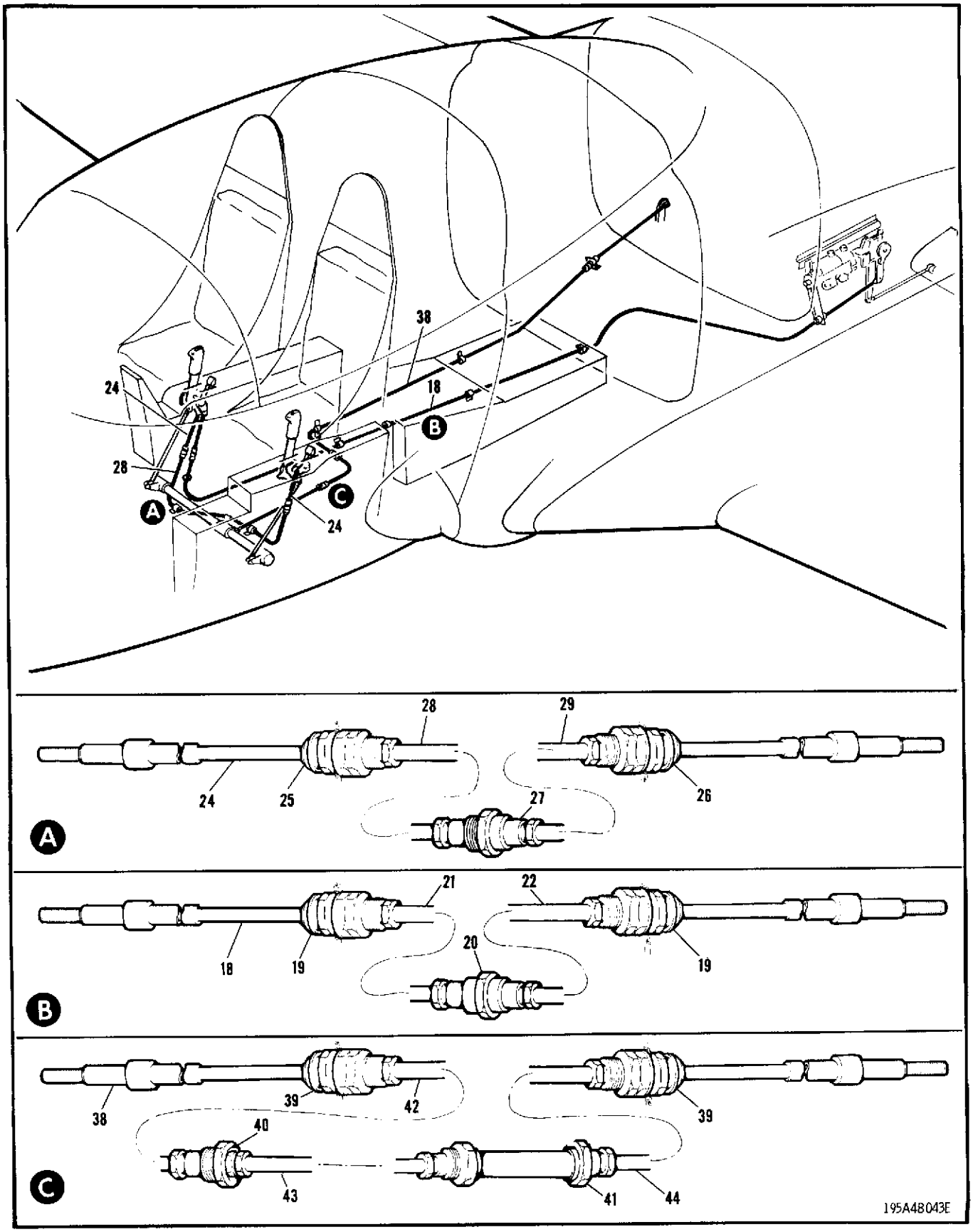

FIGURE 71 (SHEET 1) POWER & FLAP CONTROLS

	FIGURE AND INDEX NUMBER	GROUP / MAJOR ASSEMBLY / PART NUMBER	FLIGHT CONTROLS / POWER & FLAP CONTROLS / 1 2 3 4 5 6 7 NOMENCLATURE	EFFEC-TIVITY	UNITS PER ASSY
	71 -	41A-90751	POWER & FLAP CONTROL INSTL -(SEE SECTION 3)		NP
		41A-90752	.BOX INSTL - POWER & FLAP (SEE FIG. 72) (SEE FIG. 73)		REF
		41A-90785	.LEVER INSTL - CENTRE CONSOLE POWER & FLAP (SEE FIG. 73)		REF
	- 1	41A-90780	.TUBE - POWER CONTROL INTERCONNECT		1
	- 2	41A-90777-4	.LEVER - POWER CONTROL		1
	- 3	41A-90776	.LEVER - POWER CONTROL		1
	- 4	AN386-1-13A	.PIN		4
		AN975-3	.WASHER		4
		MS21042L3	.NUT		4
		41A-90779	.BEARING ASSY - END		1
	- 5	41A-90779-2	..HOUSING - END BEARING		1
R	- 6	B542DD	..BEARING - (V21335)		1
		41A-90778-4	.BEARING ASSY - POWER CONTROL		1
	- 7	41A-90778-2	..HOUSING - POWER CONTROL BEARING		1
R	- 8	B542DD	..BEARING - (V21335)		1
	- 9	NAS623-3-2	.SCREW		8
	-10	NAS1203-6	.BOLT		4
		AN960PD10	.WASHER		12
		MS21042L3	.NUT		12
	-11	NAS428KH4-12	.BOLT - (ADJUSTER ON 41A-90778)		1
		NAS509-4	.NUT		1
	-12	41A-90777-6	.LEVER - POWER CONTROL		1
		41A-90781	.ROD ASSY - POWER CONTROL		2
		41A-90781-2	..ROD ASSY - POWER CONTROL		1
	-13	41A-90781-4	...ROD - POWER CONTROL		1
	-14	AN490HT8P	...ROD END		1
	-15	AN948RE3H5	...ROD END		1
		AN385-30-6	...PIN		4
R	-16	AR3-4	..ROD END - (V77896)		1
		NAS509-4	..NUT		1
	-17		DELETED		
	-17A	NAS1103-11D	.BOLT		2
	-17B	NAS1103-12D	.BOLT		2
		AN960PD10	.WASHER		4
		AN320-3	.NUT		4
		MS24665-134	.COTTER PIN		4
R	-18	40252-2	.PUSH PULL UNIT - (V78710) (FLAP CONTROL) (AS PER 41A-90784-2)		1
R	-19	21428-22	..TELESCOPIC UNIT - (V78710) (FLAP CONTROL)		2
R	-20	15489-3	..CONNECTOR - (V78710) (FLAP CONTROL CONDUIT)		1
R	-21	21430	..CONDUIT - (V78710) (FLAP CONTROL CABLE)		1
R	-22	21431	..CONDUIT - (V78710) (FLAP CONTROL CABLE)		1
R		12164-1424	..CABLE - (V78710) (FLAP CONTROL)		1
	-23	MS35489-10	.GROMMET		1
R	-24	40252-4	.PUSH PULL UNIT - (V78710) (FLAP CONTROL) (AS PER 41A-90784-4)		1
R	-25	21428-22	..TELESCOPIC UNIT - (V78710) (FLAP CONTROL)		1
R	-26	21428-16	..TELESCOPIC UNIT - (V78710) (FLAP CONTROL)		1
R	-27	15489-3	..CONNECTOR - (V78710) (FLAP CONTROL CONDUIT)		1
R	-28	21429	..CONDUIT - (V78710) (FLAP CONTROL CABLE)		1
R	-29	21861	..CONDUIT - (V78710) (FLAP CONTROL CABLE)		1
		12164-511	..CABLE - (V78710) (FLAP CONTROL)		1

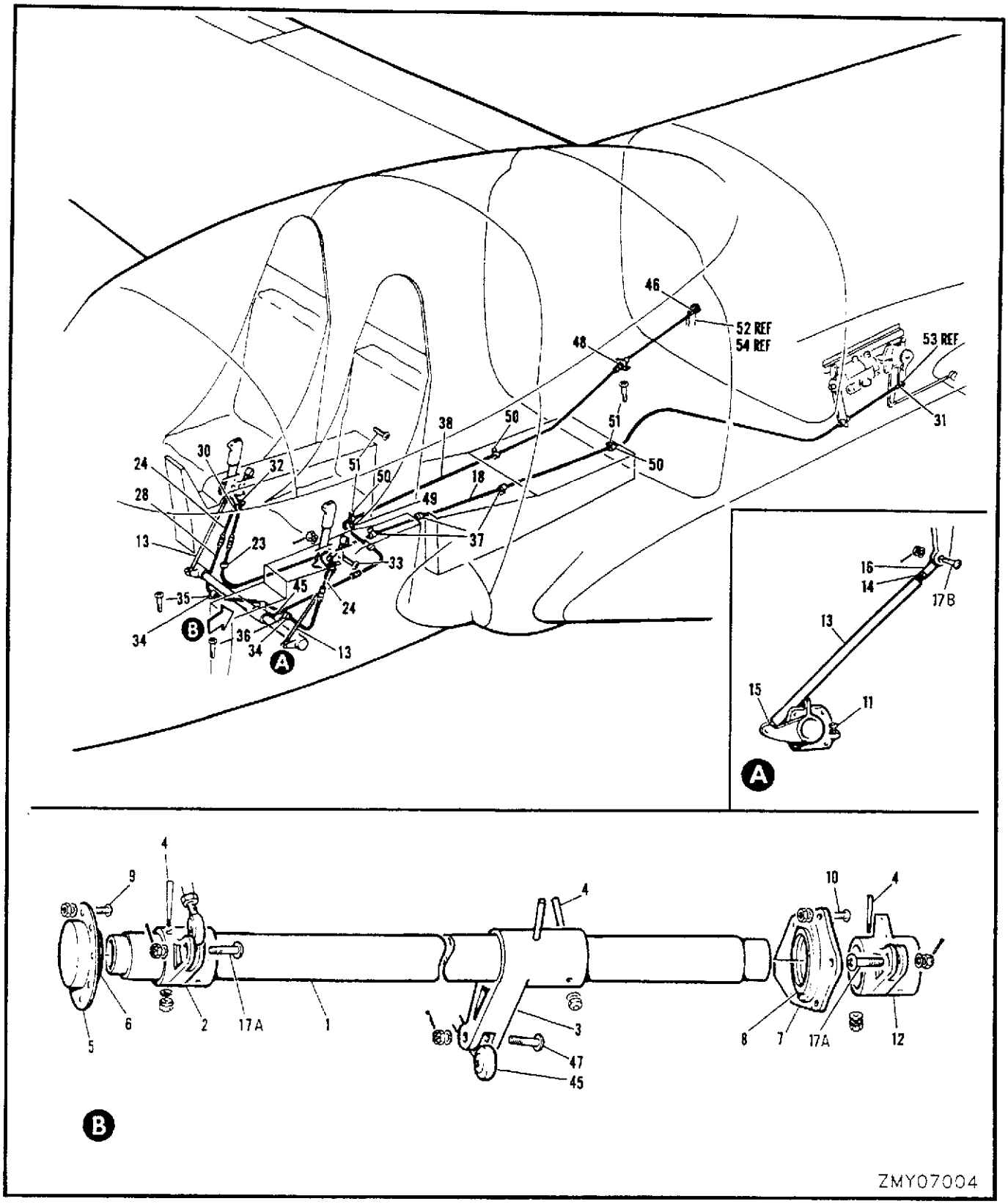

FIGURE 71 (SHEET 2) POWER & FLAP CONTROLS

FIGURE AND INDEX NUMBER	GROUP: FLIGHT CONTROLS MAJOR ASSEMBLY: POWER & FLAP CONTROLS PART NUMBER	1 2 3 4 5 6 7 NOMENCLATURE	EFFEC-TIVITY	UNITS PER ASSY
71 -30	AR3-4	.ROD END - (RMB)		3
-31	RF4-4	.ROD END - (RMB)		3
	NAS509-4	.NUT		4
-32	NAS1103-15D	.BOLT - (PUSH PULL UNIT TO RH FLAP LEVER)		2
-33	NAS1103-11D	.BOLT - (PUSH PULL UNIT TO LH FLAP LEVER)		1
	AN960PD10	.WASHER		3
	AN320-3	.NUT		3
	MS24665-134	.COTTER PIN		3
-34	316-5-8	.CLIP - (V00502)		2
-35	NAS623-3-11	.SCREW		1
	NAS43DD3-36	.SPACER		1
-36	NAS623-3-4	.SCREW		1
	AN960PD10	.WASHER		3
	MS21042L3	.NUT		2
-37	316-5-8	.CLIP - (V00502)(FOR ATT SCREWS SEE HYD LINES)		3
	NAS43DD3-58	.SPACER - (FUSELAGE STA 224)		1
	NAS43DD3-13	.SPACER - (FUSELAGE STA 238)		1
	AN960PD10	.WASHER		3
-38	40250	.PUSH PULL UNIT - (V78710) (POWER CONTROL) (AS PER 41A-90783-800)		1
-39	21505-44	..TELESCOPIC UNIT - (V78710) (POWER CONTROL)		2
-40	15571-1	..CONNECTOR - (V78710) (POWER CONTROL CONDUIT)		1
-41	21434-1	..CONNECTOR - (V78710) (POWER CONTROL CONDUIT)		1
-42	21432	..CONDUIT - (V78710) (POWER CONTROL CABLE)		1
-43	21433	..CONDUIT - (V78710) (POWER CONTROL CABLE)		1
-44	21862	..CONDUIT - (V78710) (POWER CONTROL CABLE)		1
	12164-1311	..CABLE - (V78710) (POWER CONTROL)		1
-45	AR3-4	.ROD END - (RMB)		1
-46	RF4-4	.ROD END - (RMB)		1
	NAS509-4	.NUT		2
-47	NAS1103-11D	.BOLT		1
	AN960PD10	.WASHER		1
	AN320-3	.NUT		1
	MS24665-134	.COTTER PIN		1
-48	41A-90751-56	.ANGLE - TELESCOPIC UNIT LOCKING (FIREWALL POWER CONTROL BOX)		1
-49	41A-90790	.PLATE - POWER CONTROL MOUNTING		1
-50	316-5-8	.CLIP - (V00502)		3
-51	NAS623-3-4	.SCREW		2
	AN960PD10	.WASHER		2
	AN960PD8	.WASHER		1
	MS21042L3	.NUT		2
-52	41A-90773-10	LEVER - POWER CONTROL (SEE SECTION 5)		REF
R -53	NAS6204-24D	BOLT - (PUSH PULL CONN) (SEE FIG. 74)		REF
R -54	NAS6204-13D	BOLT - (SEE SECTION 5)		REF

-000-

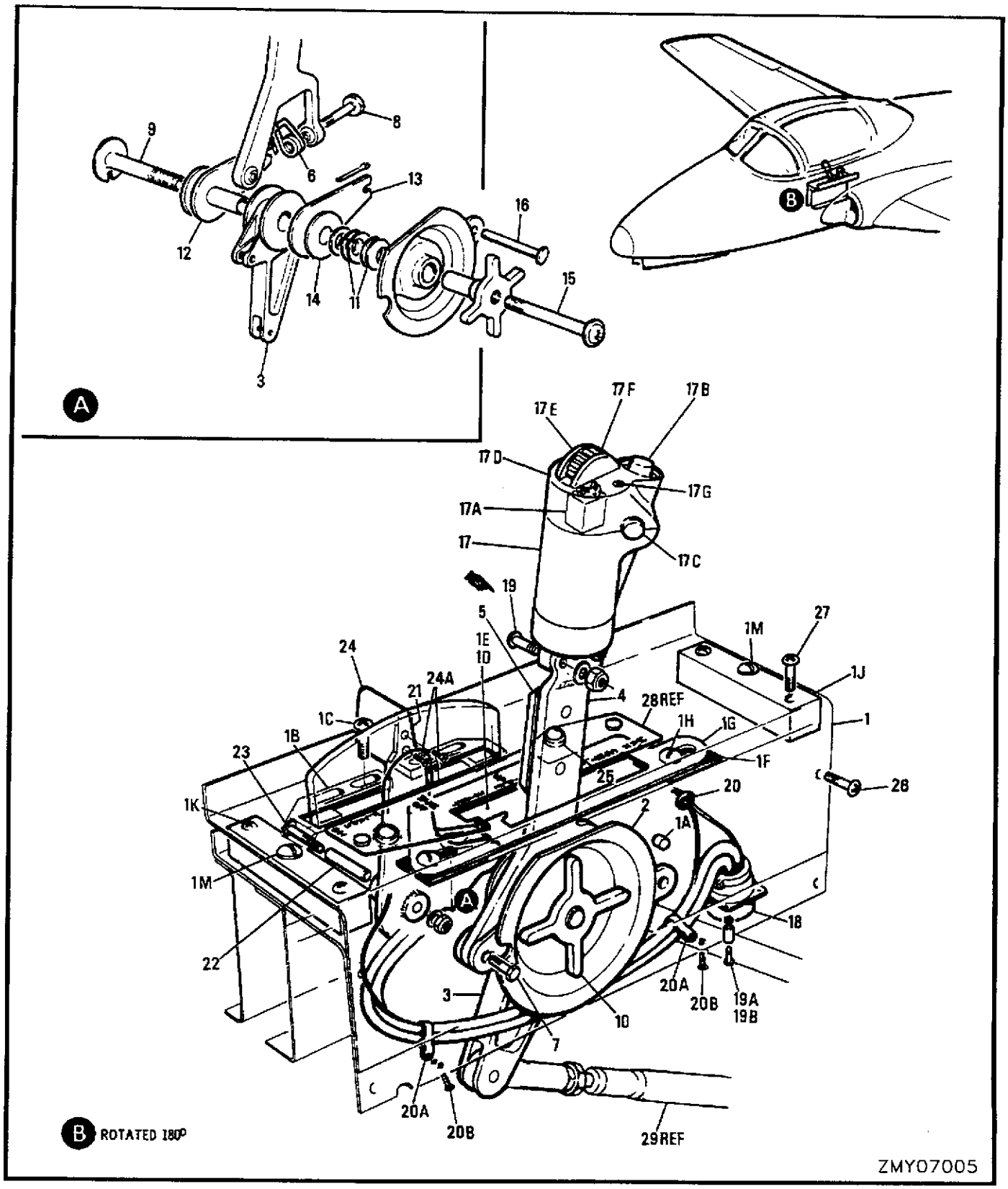

FIGURE 72 POWER & FLAP CONTROL BOX

FIGURE AND INDEX NUMBER	GROUP: FLIGHT CONTROLS MAJOR ASSEMBLY: POWER & FLAP CONTROL BOX PART NUMBER	1 2 3 4 5 6 7 NOMENCLATURE	EFFEC-TIVITY	UNITS PER ASSY
72 -	41A-90752-804	CONTROL BOX INSTL - POWER & FLAP (SEE FIG. 71)		NP
	41A-90762-86	.CONTROL BOX ASSY - POWER & FLAP		1
- 1	41A-90765-802	..CONTROL BOX ASSY		1
- 1A	41A-90772	...SPIGOT - THROTTLE CONTROL		1
- 1B	41A-90765-62	...PLATE - FLAP CONTROL LEVER STOP		2
- 1C	MS27039-1-09	...SCREW		4
- 1D	41A-90765-76	...PAD - (POWER CONTROL)		1
- 1E	41A-90765-78	...PAD - (POWER CONTROL)		1
- 1F	41A-90765-26	...PLATE - SERRATED		2
- 1G	41A-90765-70	...PLATE - GUIDE		1
- 1H	MS27039-1-09	...SCREW		2
- 1J	41A-90765-22	...SPACER - (CONTROL BOX)		1
- 1K	41A-90765-24	...SPACER - (CONTROL BOX)		1
- 1M	MS27039-1-06	...SCREW		2
- 2	41A-90756	..DISC - THROTTLE CONTROL BEARING		1
	NAS623-3-2	.SCREW		2
	41A-90752-15	.LEVER ASSY - POWER CONTROL		1
	41A-90767	..LEVER ASSY		1
- 3	41A-90767-2	...LEVER		1
	AA521	...BUSHING - (PER)		1
	41A-90752-84	..LEVER ASSY		1
	41A-90766-6	...LEVER ASSY		1
- 4	41A-90766-8	....LEVER		1
	ADB4V	....BEARING - (V83086)		2
- 5	NO NUMBER	...COVER - CABLE (IAW C-12-114-000/CF-460)		1
- 6	41A-90762-2	..SPRING		1
- 7	NAS1204-12D	..BOLT		1
	AN960PD416L	..WASHER		1
	AN320-4	..NUT		1
	MS24665-151	..COTTER PIN		1
R - 8	NAS6204-16	..BOLT		1
	NAS561P2-16	..PIN		1
- 9	41A-90758	.SHAFT - THROTTLE CONTROL		1
-10	41A-90757	.HANDLE - THROTTLE DAMPER		1
-11	1000-35	.WASHER - (V92830) (PLATED)		4
	AN960-816L	.WASHER		AR
-12	41A-90755-2	.WASHER		1
-13	41A-90755-4	.WASHER		1
-14	S1246-32-52-032	.WASHER - (V88308)		1
-15	MS27039-1-32	.SCREW		1
	AN960PD10L	.WASHER		1
	AN320-3	.NUT		1
	MS24665-149	.COTTER PIN		1
-16	MS20392-2C55	.PIN		1
	MS24665-149	.COTTER PIN		1
	41A-90752-52	.GRIP ASSY - (POWER CONTROL)		1
	KY925	..GRIP ASSY - (V80477)		1
-17	KY246	...BASE ASSY - (V80477)		1
-17A	13AT2	...SWITCH - (V94580) (SPEEDBRAKE)		1
	KJ126	...WASHER - (V80477)		1
-17B	MS25089-4B	...SWITCH - (AIR START)		1
	RR75C	...LOCK RING - (V80477)		1
-17C	MS25089-4B	...SWITCH - (MICROPHONE)		1
-17D	KV144	...COVER - (V80477)		1
-17E	KC106-500	...BUTTON HOUSING		1
	AN530-2-6	...SCREW		2
-17F	KZ147	...BUTTON - (V80477)		1
	AN565A4-3	...SETSCREW		1
-17G	MS35206-220	...SCREW		2
-18	PT00SE14-19P	..RECEPTACLE - (BAC)		1
	S124489-5-1/4	..CONDUIT - (V88308)		1

FIGURE AND INDEX NUMBER	GROUP: FLIGHT CONTROLS MAJOR ASSEMBLY: POWER & FLAP CONTROL BOX PART NUMBER	1 2 3 4 5 6 7 NOMENCLATURE	EFFEC-TIVITY	UNITS PER ASSY
72 -19	NAS623-4-9	.SCREW - (GRIP RETAINING)		2
	AN960PD416L	.WASHER		2
	MS21083N4	.NUT		2
R -19A	MS35206-219	.SCREW - (RECEPTACLE RETAINING)		4
-19B	NAS43DD0-24	.SPACER		4
	AN960PD4	.WASHER		4
-20	MS35489-1	.GROMMET		1
-20A	443E4-2-6	.CLIP - (V00502)		2
-20B	MS24693S49	.SCREW		2
	41A-90759	.LEVER ASSY - FLAP		1
-21	41A-90759-2	..LEVER - FLAP		1
	AA401-1	..BUSHING - (VK7182)		1
-22	41A-90761	.SHAFT - FLAP CONTROL		1
-23	NAS1103-19D	.BOLT		1
	AN960PD10L	.WASHER		1
	AN320-3	.NUT		1
	MS24665-149	.COTTER PIN		1
-24	41A-90760	.HANDLE - FLAP LEVER		1
-24A	MS24693S28	.SCREW		2
-25	A7165-1-327	.LIGHT ASSY - (V72914)		2
-26	NAS623-3-3	.SCREW		4
-27	NAS623-3-7	.SCREW		4
-28	41A-50728	PANEL - EDGELIT (SEE SECTION 12)		REF
-29	41A-90781	ROD ASSY - POWER CONTROL (SEE FIG. 71)		REF

-000-

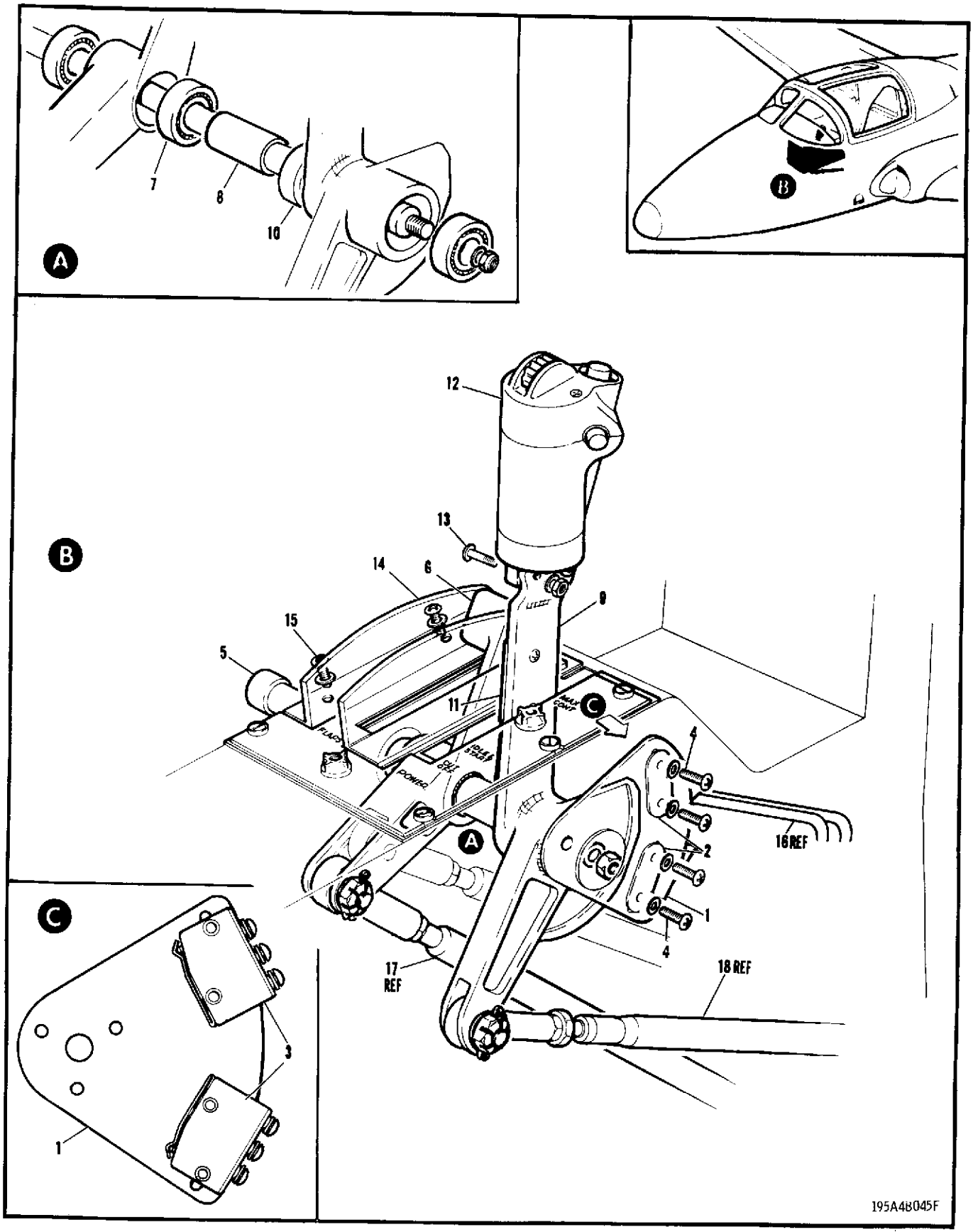

FIGURE 73 CENTRE CONSOLE POWER & FLAP LEVERS

FIGURE AND INDEX NUMBER	GROUP / MAJOR ASSEMBLY / PART NUMBER	FLIGHT CONTROLS / CENTRE CONSOLE POWER & FLAP LEVERS / 1 2 3 4 5 6 7 NOMENCLATURE	EFFEC-TIVITY	UNITS PER ASSY
73 -	41A-90785	LEVER INSTL - CENTRE CONSOLE POWER & FLAP (SEE FIG. 71)		NP
- 1	41A-90786-4	.PLATE - SWITCH MOUNTING		1
- 2	41A-90786-10	.PLATE ASSY - SWITCH MOUNTING		2
- 3	MS24456-1	.SWITCH - (RETARD & ADVANCE THROTTLE) (S3J)		2
- 4	MS35206-219	.SCREW		4
	AN960PD4L	.WASHER		4
- 5	41A-90771	.SHAFT - THROTTLE & FLAP CONTROL		1
	41A-90770-6	.LEVER ASSY - FLAP CONTROL		1
- 6	41A-90770-8	..LEVER - FLAP CONTROL		1
- 7	B538DD	..BEARING - (V21335)		2
- 8	NAS43DD10-87	.SPACER		1
	41A-90785-2	.LEVER ASSY - POWER CONTROL		1
	41A-90769	..LEVER ASSY - POWER CONTROL		1
		OR		
	41A-90769-800	..LEVER ASSY - POWER CONTROL		
- 9	41A-90769-6	...LEVER		1
-10	B538DD	...BEARING - (V21335)		2
-11	41A-90782	..COVER - CABLE		1
	AN960PD416L	.WASHER - (ON SHAFT)		1
	MS21083N4	.NUT		1
	41A-90785-6	.GRIP ASSY - POWER CONTROL		1
-12	KY925	..GRIP ASSY - (V80477) (FOR BRKDN SEE FIG. 72)		1
	S1244F9-3	..CONDUIT - (V88308)		1
-13	NAS623-4-11	.SCREW		2
	AN960PD416L	.WASHER		2
	MS21083N4	.NUT		2
-14	41A-90768-8	.GUARD - LH		1
	41A-90768-9	.GUARD - RH		1
R -15	MS35214-27	.SCREW		4
	S1426-6	.WASHER - (V88308)		4
-16	41A-90785-4	.HARNESS ASSY - (SEE SECTION 12)		REF
-17	40252-2	PUSH PULL UNIT - (FLAP CONTROL) (SEE FIG. 71)		REF
-18	41A-90781	ROD ASSY - POWER CONTROL (SEE FIG. 71)		REF

-000-

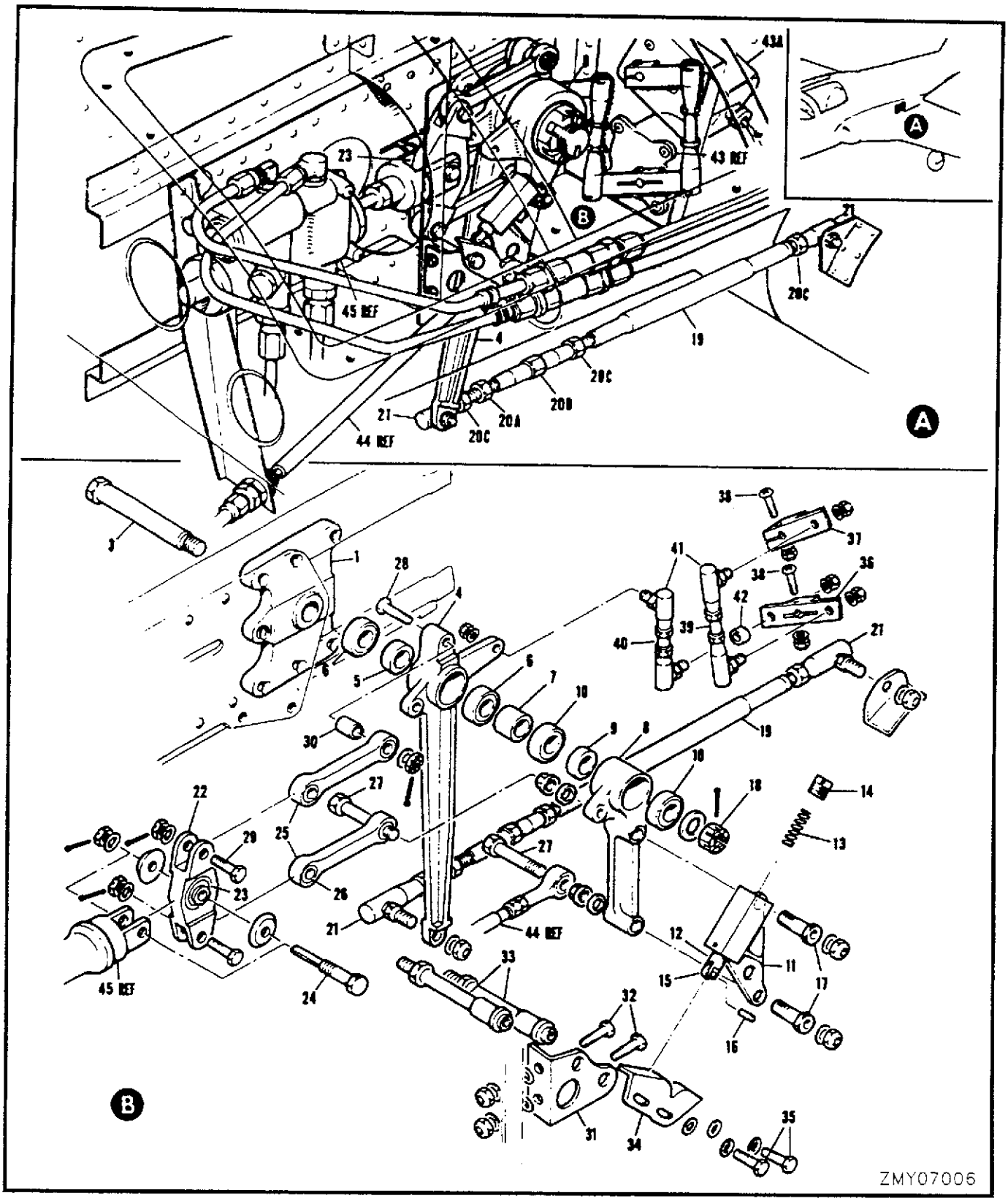

FIGURE 74 FLAP FOLLOW UP SYSTEM MECHANISM

FIGURE AND INDEX NUMBER	GROUP	FLIGHT CONTROLS	EFFEC-TIVITY	UNITS PER ASSY
	MAJOR ASSEMBLY	FLAP FOLLOW UP SYSTEM MECHANISM		
	PART NUMBER	1 2 3 4 5 6 7 NOMENCLATURE		
74 -	41A-35160	FAIRING INSTL - FUSELAGE TO WING LH (SEE SECTION 3)		REF
- 1	41A-90874-2	.MOUNTING - FLAP CONTROL SHAFT (RIVETED)		1
- 2		DELETED		
	41A-90851	FOLLOW UP SYS MECH INSTL - FLAP (SEE SECTION 3)		NP
- 3	41A-90853-100	.SHAFT - FLAP FOLLOW UP LEVER		1
	41A-90856-6	.LEVER ASSY		1
- 4	41A-90856-8	..LEVER		1
- 5	41A-90430-42	..SPACER - (BETWEEN BEARINGS)		1
- 6	B538DD	..BEARING - (V21335)		2
- 7	41A-90430-44	.SPACER - (BETWEEN LEVERS)		1
	41A-90886	.LEVER ASSY - FLAP CONTROL		1
	41A-90857-6	..LEVER ASSY - FLAP FOLLOW UP		1
- 8	41A-90857-8	...LEVER - FLAP FOLLOW UP		1
- 9	41A-90430-42	...SPACER - (BETWEEN BEAR INGS)		1
-10	B538DD	...BEARING - (V21335)		2
-11	41A-90880	..HOUSING - FLAP CONTROL		1
-12	41A-90877	..FORK END - FLAP CONTROL		1
	NAS561-2-11	..PIN		1
-13	41A-90875	..SPRING - COMPRESSION (FLAP CONTROL)		1
-14	41A-90883	..PLUG - FLAP CONTROL THREADED		1
-15	41A-90879	..ROLLER - FLAP CONTROL		1
-16	41A-90886-10	..ROD - DRILL		1
-17	41A-90881	..BOLT - FLAP CONTROL SPECIAL		2
	AN960PD616L	..WASHER		2
	MS21042L6	..NUT		2
	AN960PD816	.WASHER - (ON SHAFT)		1
-18	AN320-8	.NUT		1
	MS24665-287	.COTTER PIN		1
	41A-90862-802	.ROD ASSY - FLAP FOLLOW UP		1
-19	41A-90862-12	..ROD ASSY - FLAP FOLLOW UP		1
-20		DELETED		
-20A	41A-90862-14	..TURNBUCKLE		1
-20B	41A-90862-16	..TURNBUCKLE		1
-20C	AN316-4R	..NUT		3
-21	AN276-6	..JOINT ASSY		2
	AN960PD416	.WASHER - (SOCKET BOLTS)		2
	MS21042L4	.NUT		2
	41A-90858	.LEVER ASSY - FLAP FOLLOW UP VALVE		1
-22	41A-90858-2	..LEVER - FLAP FOLLOW UP VALVE		1
-23	MS20207DPP4	..BEARING		1
-24	41A-90878	.BOLT - FLAP CONTROL SPECIAL		1
	AN960PD416	.WASHER		1
	AN320-4	.NUT		1
	MS24665-134	.COTTER PIN		1
	41A-90876	.LINK ASSY - FLAP CONTROL		2
-25	41A-90876-2	..LINK - FLAP CONTROL		1
-26	KWB4N	..BEARING - (V97613)		2
		OR		
	KWB4N3	..BEARING		
R -27	NAS6204-24D	.BOLT		2
R -28	NAS6204-20D	.BOLT		1
R -29	NAS6204-11D	.BOLT		2
-30	NAS43DD4-19	.SPACER		1
	AN960PD416	.WASHER		5
	AN320-4	.NUT		5
	MS24665-134	.COTTER PIN		5
-31	41A-90885	.MOUNTING - FLAP CONTROL DETENT		1
-32	AN3-5	.BOLT		2
	S1246LS12-12-063	.WASHER - (V88308)		AR
	AN960PD10	.WASHER		2
	MS21042L3	.NUT		2

FIGURE AND INDEX NUMBER	GROUP	OFLIGHT CONTROLS	EFFEC-TIVITY	UNITS PER ASSY
	MAJOR ASSEMBLY	FLAP FOLLOW UP SYSTEM MECHANISM		
	PART NUMBER	1 2 3 4 5 6 7 NOMENCLATURE		
74 -33	41A-90882	.STUD - FLAP CONTROL DETENT MOUNTING		2
-34	41A-90884	.DETENT - FLAP CONTROL		1
-35	AN4-5	.BOLT		2
	AN960PD416L	.WASHER		2
	MS35338-44	.LOCK WASHER		2
-36	41A-90873	.LEVER - FLAP POSITION TRANSMITTER		1
-37	41A-90861	.LEVER - FLAP POSITION TRANSMITTER (STALL WARNING)		1
-38	AN3-10A	.BOLT - (LEVERS TO TRANSMITTERS)		2
	NAS43DD4-16	.SPACER		2
	AN960PD10	.WASHER		2
	MS21042L3	.NUT		2
	41A-90859	.ROD ASSY - FLAP POSITION XMTR CONTROL		1
	41A-90859-800	.ROD ASSY - FLAP POSITION XMTR CONTROL		1
-39	41A-90859-2	..ROD - FLAP POSITION XMTR CONTROL		1
-40	41A-90859-8	..ROD - (REQUIRED ON 41A-90859-800)		1
-41	AN276-6	..JOINT ASSY		2
	AN316-4R	..NUT		2
-42	NAS43DD4-12	.SPACER		1
	AN960PD416L	.WASHER		1
	AN960PD416	.WASHER - (ON SOCKET)		4
	MS21042L4	.NUT		4
R -43	MIL-T-5583A	TRANSMITTER - FOLLOW UP (SEE SECTION 14)		REF
-43A	C75509	TRANSMITTER - (STALL WARNING POSITION) (SEE SECTION 12)		REF
-44	40252-2	PUSH PULL UNIT - (FLAP CONTROL) (SEE FIG. 71)		REF
-45	3293000-1	VALVE ASSY - (FLAP CONTROL) (SEE SECTION 8)		REF

-000-

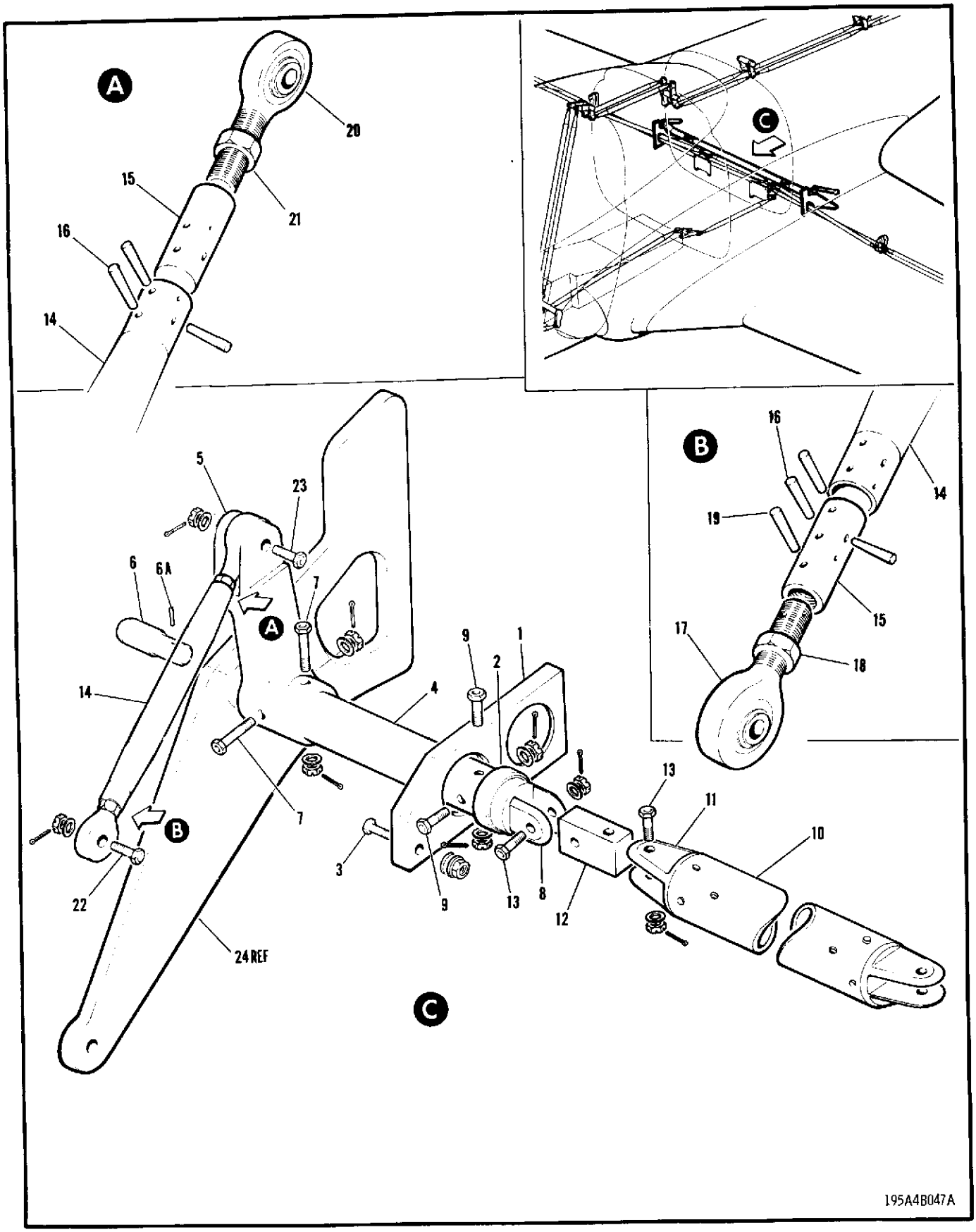

FIGURE 75 FLAP INTERCONNECT

FIGURE AND INDEX NUMBER	GROUP: FLIGHT CONTROLS MAJOR ASSEMBLY: FLAP INTERCONNECT PART NUMBER	1 2 3 4 5 6 7 NOMENCLATURE	EFFEC-TIVITY	UNITS PER ASSY
75 -	41A-90852	INTERCONNECT INSTL - FLAP (SEE SECTION 3)		NP
- 1	41A-90868-2	.MOUNTING - FLAP INTERCONNECT (PORT)		1
- 2	MS27648-21	.BEARING		1
	41A-90868-7	.MOUNTING ASSY - FLAP INTERCONNECT (STBD)		1
	41A-90868-5	..MOUNTING - FLAP INTERCONNECT (STBD)		1
	MS27648-21	..BEARING		1
	S1236-10L	.WASHER - (V88308)		AR
- 3	AN3-7A	.BOLT		6
	AN960PD10	.WASHER		6
	MS21042L3	.NUT		6
- 4	41A-90872-2	.SHAFT - FLAP INTERCONNECT		2
	41A-90855	.LEVER ASSY - FLAP INTERCONNECT		2
- 5	41A-90855-2	..LEVER - FLAP INTERCONNECT		1
- 6	41A-90855-4	..SPIGOT - FLAP INTERCONNECT LEVER		1
- 6A	NAS561P4-16	..PIN		1
- 7	NAS6204-28D	.BOLT		4
	AN960PD416	.WASHER		4
	AN320-4	.NUT		4
	MS24665-132	.COTTER PIN		4
- 8	41A-90867	.FORK END - FLAP INTERCONNECT		2
- 9	NAS6204-23D	.BOLT		4
	S1324-4-22	.WASHER - (V88308)		8
	AN320-4	.NUT		4
	MS24665-132	.COTTER PIN		4
	41A-90865	.TORQUE TUBE ASSY - FLAP INTERCONNECT		1
-10	41A-90865-2	..TORQUE TUBE - FLAP INTERCONNECT		1
-11	41A-90866	..FORK END - FLAP INTERCONNECT		2
-12	41A-90869	.TRUNNION BLOCK - FLAP INTERCONNECT		2
-13	NAS6205-21D	.BOLT		4
	AN960PD516	.WASHER		4
	AN320-5	.NUT		4
	MS24665-134	.COTTER PIN		4
	41A-90099-62	.ROD ASSY - FLAP INTERCONNECT		2
-14	41A-90099-162	..ROD ASSY - FLAP INTERCONNECT		1
	41A-90099-262	...ROD - FLAP INTERCONNECT		1
-15	41A-90103	...INSERT - FLIGHT CONTROL ROD		2
-16	MS24692-111	...PIN		6
R -17	SM5-7C	...ROD END - (V77896)		1
-18	NAS509-7	...NUT		1
-19	MS24692-105	...PIN		1
-20	ST4BR	..ROD END - (V77896)		1
-21	NAS509-5	..NUT		1
-22	NAS6205-30D	.BOLT		2
	S1236-516	.WASHER - (V88308)		AR
	AN960PD516	.WASHER		2
	AN960PD516	.WASHER		2
	AN320-5	.NUT		2
	MS24665-134	.COTTER PIN		2
-23	NAS6204-16D	.BOLT		2
	AN960PD416	.WASHER		2
	AN320-4	.NUT		2
	MS24665-132	.COTTER PIN		2
-24	41A-10058-6	LEVER ASSY - FLAP INBOARD HINGE (SEE SECTION 3)		REF

-000-

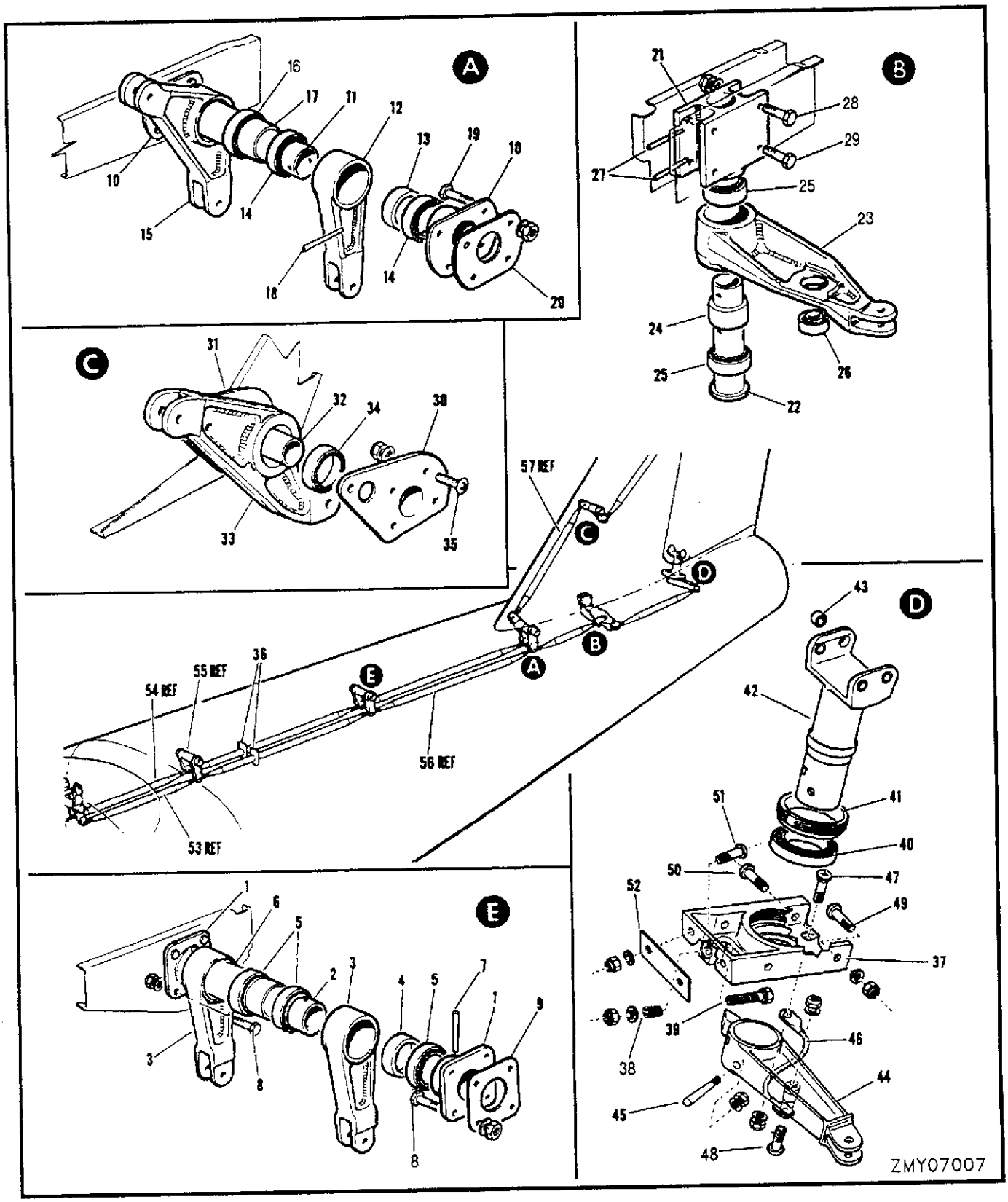

FIGURE 76 AFT FUSELAGE BELLCRANK & LEVERS

FIGURE AND INDEX NUMBER	GROUP: FLIGHT CONTROLS MAJOR ASSEMBLY: AFT FUSELAGE BELLCRANK & LEVERS PART NUMBER	1 2 3 4 5 6 7 NOMENCLATURE	EFFEC-TIVITY	UNITS PER ASSY
76 -	41A-90005	FLIGHT CONTROLS INSTL - AFT FUSELAGE (SEE SECTION 3)		NP
	41A-90456	.LEVER INSTL - FUSELAGE STA 339 CONTROL		NP
	41A-90448	..LEVER ASSY - FUSELAGE STA 339 CONTROL		1
- 1	41A-90446	...HOUSING - BEARING		2
- 2	41A-90447	...SHAFT		1
	41A-90445	...LEVER ASSY - FUSELAGE STA 339 CONTROL		2
- 3	41A-90445-2	....LEVER		1
- 4	41A-90430-8	....SPACER		1
R - 5	B540DD	....BEARING - (V21335)		2
- 6	41A-90430-12	...SPACER		1
- 7	AN385-1-12	...PIN		2
- 8	NAS1103-2	..BOLT		8
- 9	41A-90444-4	..SHIM - LAMINATED		1
	AN960PD10L	..WASHER		8
	MS21042L3	..NUT		8
	41A-90461	.LEVER INSTL - FUSELAGE STA 387 CONTROL		NP
	41A-90460	..LEVER ASSY - FUSELAGE STA 387 CONTROL		1
-10	41A-90454	...HOUSING - BEARING		2
-11	41A-90459	...SHAFT - FUSELAGE STA 387 CONTROL		1
	41A-90457	...LEVER ASSY - FUSELAGE STA 387 RUDDER CTL		1
-12	41A-90457-2	....LEVER		1
-13	41A-90430-8	....SPACER		1
R -14	B540DD	....BEARING - (V21335)		2
	41A-90458	...LEVER ASSY - FUS STA 387 ELEVATOR CTL		1
-15	41A-90458-2	....LEVER		1
	41A-90430-8	....SPACER		1
R -16	B540DD	....BEARING - (V21335)		2
-17	41A-90430-26	...SPACER		1
-18	AN385-1-12	...PIN		2
-19	NAS1103-2	..BOLT		8
-20	41A-90444-6	..SHIM - LAMINATED		1
	AN960PD10L	..WASHER		8
	MS21042L3	..NUT		8
	41A-90467	.LEVER INSTL - FUSELAGE STA 407 RUDDER CTL		NP
	41A-90466	..LEVER ASSY - FUSELAGE STA 407 RUDDER CTL		1
-21	41A-90463	...HOUSING - BEARING		2
-22	41A-90464	...SHAFT		1
	41A-90465	...LEVER ASSY - FUS STA 407 RUDDER CONTROL		1
-23	41A-90465-2	....LEVER		1
-24	41A-90430-28	....SPACER		1
R -25	B540DD	....BEARING - (V21335)		2
R -26	B4	....BEARING - (V77896)		1
-27	AN385-1-12	...PIN		2
-28	NAS1103-20	..BOLT		2
-29	NAS1103-21	..BOLT		2
	AN960PD10L	..WASHER		4
	MS21042L3	..NUT		4
	41A-90552	.BELLCRANK INSTL - FIN ELEVATOR CONTROL		NP
	41A-90552-2	..LEVER ASSY - FIN ELEVATOR CONTROL		1
-30	41A-90554	...MOUNTING - ELEVATOR CONTROL		1
-31	41A-90554-1	...MOUNTING - ELEVATOR CONTROL		1
-32	41A-90430-14	...SHAFT		1
-33	41A-90553	...BELLCRANK - ELEVATOR CONTROL		1
	41A-90430-16	...SPACER		1
R -34	B540DD	...BEARING - (V21335)		2
-35	41A-90552-14	..BOLT		8

FIGURE AND INDEX NUMBER	GROUP	FLIGHT CONTROLS	EFFEC-TIVITY	UNITS PER ASSY
	MAJOR ASSEMBLY	AFT FUSELAGE BELLCRANK & LEVERS		
	PART NUMBER	1 2 3 4 5 6 7 NOMENCLATURE		
76 -	AN960PD10	..WASHER		8
	MS21042L3	..NUT		8
-36	41A-90451-8	.TRAP - (V71310) (FLAME)		2
	41A-36042	HINGE INSTL - RUDDER (SEE SECTION 3)		NP
	41A-36042-2	.HINGE ASSY - RUDDER		1
	41A-36044	..HOUSING ASSY - RUDDER HINGE BEARING		1
-37	41A-36044-2	...FITTING - RUDDER HINGE BEARING HOUSING		1
-38	MS21209F5-15	...INSERT		2
-39	NAS428K5-11	..BOLT		2
	AN960PD516L	..WASHER		2
	AN316-5R	..NUT		2
-40	MS27648-25	..BEARING		1
-41	41A-36045	..RING - RUDDER HINGE RETAINING		1
	41A-36046	..SHAFT ASSY - RUDDER HINGE		1
-42	41A-36046-2	...SHAFT - RUDDER HINGE		1
-43	NAS75-4-008	...BUSHING		4
-44	41A-90466	..LEVER - RUDDER HINGE		1
-45	AN385-2-18A	..PIN		2
	AN975-3	..WASHER		2
	MS21042L3	..NUT		2
-46	MS25083-2BB5	..JUMPER ASSY		1
-47	NAS1203-4	..BOLT		1
	AN960PD10	..WASHER		1
	MS21042L3	..NUT		1
-48	NAS623-3-12	..SCREW		1
	NAS43DD3-32	..SPACER		1
	AN960PD10L	..WASHER		1
	MS21042L3	..NUT		1
-49	NAS623-3-3	.SCREW		2
-50	NAS623-3-7	.SCREW		2
	AN960PD10	.WASHER		4
	MS21042L3	.NUT		4
-51	NAS623-3-2	.SCREW		2
R -52	41A-36042-6	.SHIM - (RUDDER HINGE) (MADE FROM SHIM STOCK ALUMINIUM MIL-S-22499 DIMENSIONS 0.063 X 1.00 X 3.30)		1
	AN960C10	.WASHER		2
	MS21042L3	.NUT		2
-53	41A-90099-12	ROD ASSY - RUDDER CONTROL (SEE FIG. 64)		REF
-54	41A-90099-26	ROD ASSY - ELEVATOR CONTROL (SEE FIG. 64)		REF
-55	41A-90445	LEVER ASSY - FLIGHT CONTROL (SEE FIG. 296) (SEE FIG. 63)		REF
-56	41A-90099-16	ROD ASSY - RUDDER CONTROL (SEE FIG. 77)		REF
-57	41A-90099-32	ROD ASSY - ELEVATOR CONTROL (SEE FIG. 77A)		REF

-000-

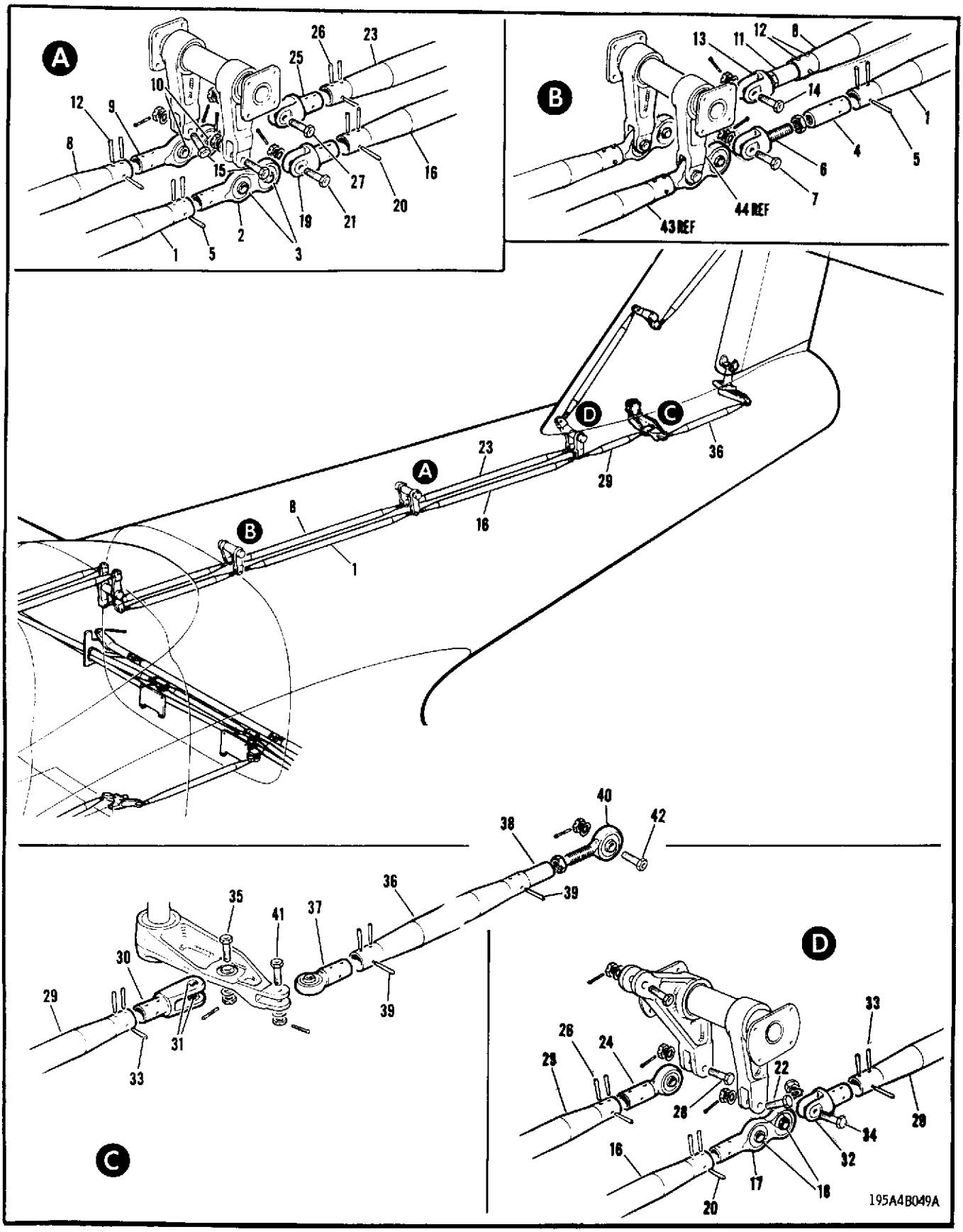

FIGURE 77 AFT FUSELAGE CONTROL RODS

	FIGURE AND INDEX NUMBER	GROUP: FLIGHT CONTROLS MAJOR ASSEMBLY: AFT FUSELAGE CONTROL RODS PART NUMBER	1 2 3 4 5 6 7 NOMENCLATURE	EFFEC-TIVITY	UNITS PER ASSY
	77 -	41A-90005	FLIGHT CONTROLS INSTL - AFT FUSELAGE (SEE FIG. 76)		REF
		41A-90099-14	.ROD ASSY - FUS STA 295-339 RUDDER CONTROL		1
		41A-90099-114	..ROD ASSY - FUS 295-339 RUDDER CONTROL		1
	- 1	41A-90099-214	...ROD - FUS STA 295-339 RUDDER CONTROL		1
		41A-90421	...END FITTING ASSY - (CONTROL ROD)		1
	- 2	41A-90421-2	....END FITTING - (CONTROL ROD)		1
	- 3	BR4H	....BEARING - (V77896)		2
	- 4	41A-90103	...INSERT - CONTROL ROD		1
	- 5	MS24692-111	...PIN		6
	- 6	41A-90439	..ROD END - FLIGHT CONTROLS		1
		NAS509-6	..NUT		1
R	- 7	NAS6204-15D	.BOLT		1
		AN960PD416	.WASHER		1
		AN320-4	.NUT		1
		MS24665-136	.COTTER PIN		1
		41A-90099-28	.ROD ASSY - FUS STA 295-339 ELEVATOR CTL		1
		41A-90099-128	..ROD ASSY - FUS STA 295-339 ELEVATOR CTL		1
	- 8	41A-90099-228	...ROD - FUS STA 295-339 ELEVATOR CONTROL		1
		41A-90421	...END FITTING ASSY - (CONTROL ROD)		1
	- 9	41A-90421-2	....END FITTING - (CONTROL ROD)		1
	-10	BR4H	....BEARING - (V77896)		2
	-11	41A-90103	...INSERT - CONTROL ROD		1
	-12	MS24692-135	...PIN		6
	-13	41A-90439	..ROD END - FLIGHT CONTROLS		1
		NAS509-6	..NUT		1
R	-14	NAS6204-15D	.BOLT		1
R	-15	NAS6204-14D	.BOLT		2
		AN960PD416	.WASHER		3
		AN320-4	.NUT		3
		MS24665-136	.COTTER PIN		3
		41A-90099-16	.ROD ASSY - FUS STA 339-387 RUDDER CONTROL		1
	-16	41A-90099-216	..ROD - FUS STA 339-387 RUDDER CONTROL		1
		41A-90421	..END FITTING ASSY - (CONTROL ROD)		1
	-17	41A-90421-2	...END FITTING - (CONTROL ROD)		1
	-18	BR4H	...BEARING - (V77896)		2
	-19	41A-90440	..END FITTING - (FLIGHT CONTROLS)		1
	-20	MS24692-111	..PIN		6
R	-21	NAS6204-15D	.BOLT		1
R	-22	NAS6204-14D	.BOLT		1
		AN960PD416	.WASHER		2
		AN320-4	.NUT		2
		MS24665-136	.COTTER PIN		2
		41A-90099-30	.ROD ASSY - FUS STA 339-387 ELEVATOR CTL		1
	-23	41A-90099-230	..ROD - FUS STA 339-387 ELEVATOR CONTROL		1
	-24	SPH4-10C-7	..ROD END		1
	-25	41A-90440	..END FITTING - (FLIGHT CONTROLS)		1
	-26	MS24692-135	..PIN		6
R	-27	NAS6204-15D	.BOLT		1
R	-28	NAS6204-16D	.BOLT		1
		AN960PD416	.WASHER		2
		AN320-4	.NUT		2
		MS24665-136	.COTTER PIN		2
		41A-90099-18	.ROD ASSY - FUS STA 387-406 RUDDER CONTROL		1
	-29	41A-90099-218	..ROD - FUS STA 387-406 RUDDER CONTROL		1
		41A-90469	..FORK ASSY - FUS STA 406 RUDDER CONTROL		1
	-30	41A-90469-2	...FORK - FUS STA 406 RUDDER CONTROL		1
	-31	41A-90472	...BUSHING - FUS STA 406 RUDDER CONTROL		2
	-32	41A-90440	..END FITTING - (FLIGHT CONTROLS)		1
	-33	MS24692-111	..PIN		6
R	-34	NAS6204-15D	.BOLT		1
R	-35	NAS6204-14D	.BOLT		1
		AN960PD416	.WASHER		2
		AN320-4	.NUT		2
		MS24665-136	.COTTER PIN		2

FIGURE AND INDEX NUMBER	GROUP: FLIGHT CONTROLS MAJOR ASSEMBLY: AFT FUSELAGE CONTROL RODS PART NUMBER	1 2 3 4 5 6 7 NOMENCLATURE	EFFEC-TIVITY	UNITS PER ASSY
77 -	41A-90099-60	.ROD ASSY - FUS STA 406-434 RUDDER CONTROL		1
	41A-90099-160	..ROD ASSY - FUS STA 406-434 RUDDER CTL		1
-36	41A-90099-260	...ROD - FUS STA 406-434 RUDDER CONTROL		1
-37	SPH4-10C-7	...ROD END		1
-38	41A-90103	...INSERT - CONTROL ROD		1
-39	MS24692-111	...PIN		6
-40	ST4AR	..ROD END - (V77896)		1
	NAS509-6	..NUT		1
R -41	NAS6204-13D	.BOLT		1
R -42	NAS6204-16D	.BOLT		1
	AN960PD416	.WASHER		2
	AN320-4	.NUT		2
	MS24665-136	.COTTER PIN		2
-43	41A-90099-212	ROD ASSY - RUDDER CONTROL (SEE FIG. 64)		REF
-44	41A-90445	LEVER ASSY - FUSELAGE STA 295 CONTROL (SEE FIG. 63)		REF

-000-

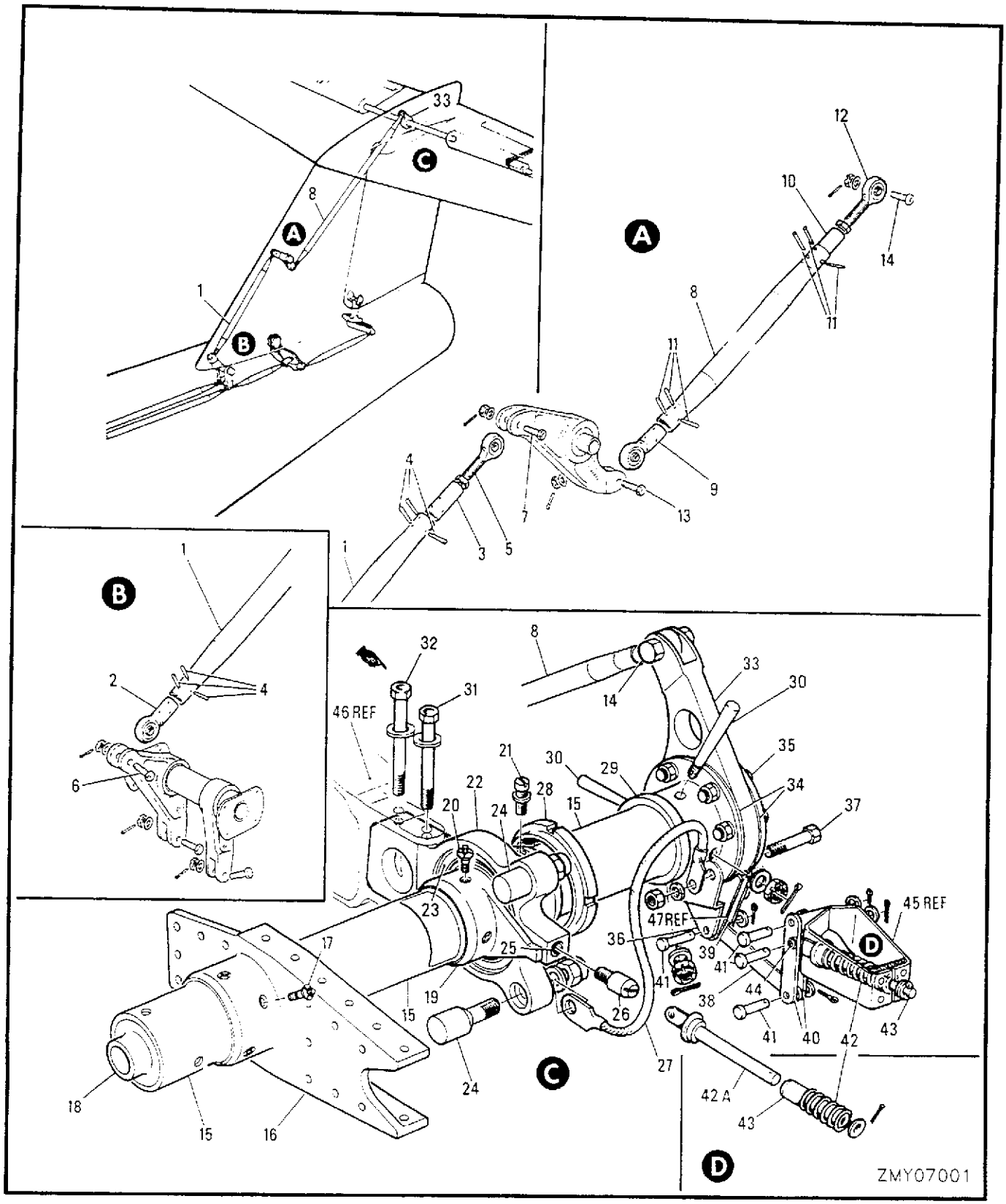

FIGURE 77A ELEVATOR CONTROL RODS & TORQUE TUBE

FIGURE AND INDEX NUMBER	GROUP	FLIGHT CONTROLS	EFFEC-TIVITY	UNITS PER ASSY
	MAJOR ASSEMBLY	ELEVATOR CONTROL RODS & TORQUE TUBE		
	PART NUMBER	1 2 3 4 5 6 7 NOMENCLATURE		
77A -	41A-90005	FLIGHT CONTROLS INSTL - REAR FUSELAGE (SEE FIG. 76)		REF
	41A-90099-32	.ROD ASSY - FUS STA 387-406 ELEVATOR CTL		1
	41A-90099-132	..ROD ASSY - FUS STA 387-406 ELEVATOR CTL		1
- 1	41A-90099-232	...ROD - FUS STA 387-406 ELEVATOR CONTROL		1
- 2	SPH4-10C-1	...ROD END		1
- 3	41A-90103	...INSERT - CONTROL ROD		1
- 4	MS24692-135	...PIN		6
- 5	ST4AR	..ROD END - (V77896)		1
	NAS509-6	..NUT		1
R - 6	NAS6204-16D	.BOLT		1
R - 7	NAS6204-15D	.BOLT		1
	AN960PD416	.WASHER		2
	AN320-4	.NUT		2
	MS24665-136	.COTTER PIN		2
	41A-90099-34	.ROD ASSY - FUS STA 406-453 ELEVATOR CTL		1
	41A-90099-134	..ROD ASSY - FUS STA 406-453 ELEVATOR CTL		1
- 8	41A-90099-234	...ROD - FUS STA 406-453 ELEVATOR CONTROL		1
- 9	SPH4-10C-1	...ROD END		1
-10	41A-90103	...INSERT - CONTROL ROD		1
-11	MS24692-135	...PIN		6
-12	ST4AR	..ROD END - (V77896)		1
	NAS509-6	..NUT		1
R -13	NAS6204-14D	.BOLT		1
R -14	NAS6204-13D	.BOLT		1
	AN960PD416L	.WASHER		2
	AN320-4	.NUT		2
	MS24665-136	.COTTER PIN		2
	41A-24028-800	TORQUE TUBE ASSY - ELEVATOR PORT (SEE SECTION 2)		1
	41A-24028-801	TORQUE TUBE ASSY - ELEVATOR STBD		1
-15	41A-24027	.TORQUE TUBE - ELEVATOR		1
-16	41A-24021	.FITTING - ELEVATOR TORQUE TUBE		1
-17	PP200-4	.JO-BOLT - (V92541)		6
-18	41-24014-2	.FITTING - ELEVATOR TORQUE TUBE		1
-19	41-24015	.FITTING - ELEVATOR TORQUE TUBE INBD HINGE		1
-20	PP200-4	.JO-BOLT - (V92541)		4
-21	AN500A8-5	.SCREW		1
	AN960PD8	.WASHER		1
	41-24022-802	.BEARING ASSY - ELEVATOR INBD HINGE PORT		1
	41-24022-803	.BEARING ASSY - ELEVATOR INBD HINGE STBD		1
-22	41-24022-18	..HOUSING - HINGE BEARING PORT		1
	41-24022-19	..HOUSING - HINGE BEARING STBD		1
-23	MS27648-33	..BEARING		1
-24	41-24017	..PEG - ELEVATOR STOP		2
	AN960PD416L	..WASHER		2
	MS21083N4	..NUT		2
-25	MS21209F4-15	..INSERT		1
-26	41-24023	..PEG - FAIRING LOCATION		1
-27	MS25083-2CC8	.JUMPER ASSY		1
-28	41-24016	.NUT - ELEVATOR TORQUE TUBE SPECIAL		1
-29	41-24012-2	.FITTING - ELEVATOR TORQUE TUBE OPERATING LEVER PORT		1
	41-24012-3	.FITTING - ELEVATOR TORQUE TUBE OPERATING LEVER STBD		1
-30	AN386-2-16	.PIN		2
	AN975-3	.WASHER		2
	AN320-3	.NUT		2
	MS24665-132	.COTTER PIN		2

	FIGURE AND INDEX NUMBER	GROUP: FLIGHT CONTROLS MAJOR ASSEMBLY: ELEVATOR CONTROL RODS & TORQUE TUBE PART NUMBER	1 2 3 4 5 6 7 NOMENCLATURE	EFFEC-TIVITY	UNITS PER ASSY
	77A -	41A-24001	ELEVATOR INSTL - COMPLETE (SEE SECTION 2)		REF
R	-31	NAS6204-36	.BOLT - (ELEVATOR STA 7 BEARING)		2
R	-32	NAS6204-40	.BOLT - (ELEVATOR STA 7 BEARING)		2
		AN960PD416L	.WASHER - (UNDER BOLT HEAD)		4
		AN960PD416	.WASHER		4
		MS21042L4	.NUT		4
	-33	41A-90555	.LEVER - ELEVATOR CONTROL		1
	-34	41A-24001-18	.SHIM		2
R	-35	NAS6204-18	.BOLT		4
		AN960PD416	.WASHER		7
		MS21042L4	.NUT		4
	-36	41A-90610	.SUPPORT - ELEVATOR DOWN SPRING PORT		1
		41A-90610-1	.SUPPORT - ELEVATOR DOWN SPRING STBD		1
R	-37	NAS6204-21	.BOLT		2
		AN960PD416	.WASHER		4
		MS21042L4	.NUT		2
		41A-90611	.LEVER ASSY - ELEVATOR DOWN SPRING		1
	-38	41A-90611-2	..LEVER - ELEVATOR DOWN SPRING		1
	-39	AA224-1	..BEARING - (V70417)		2
	-40	41A-90613	.LEVER - ELEVATOR DOWN SPRING		1
	-41	MS20392-1C19	.PIN		4
		AN960PD4	.WASHER		4
		MS24665-132	.COTTER PIN		4
	-42	41A-90614	.SPRING - ELEVATOR DOWN COMPRESSION		1
	-42A	41A-24001-56	.SPOOL - (SPRING SUPPORT)		1
		41A-90612	.ROD ASSY - ELEVATOR DOWN SPRING		1
	-43	41A-90612-2	..ROD - ELEVATOR DOWN SPRING		1
	-44	AA224-1	..BEARING - (V70417)		1
		AN960PD416L	.WASHER		1
		MS24665-132	.COTTER PIN		1
	-45	41A-20005-46	BRACKET - (SEE SECTION 2)		REF
	-46	41A-23021-2	BRACKET - (SEE SECTION 2)		REF
	-47	41A-42170	STRIP - ELEVATOR HARNESS RUBBING (SEE FIG. 121)		REF

-000-

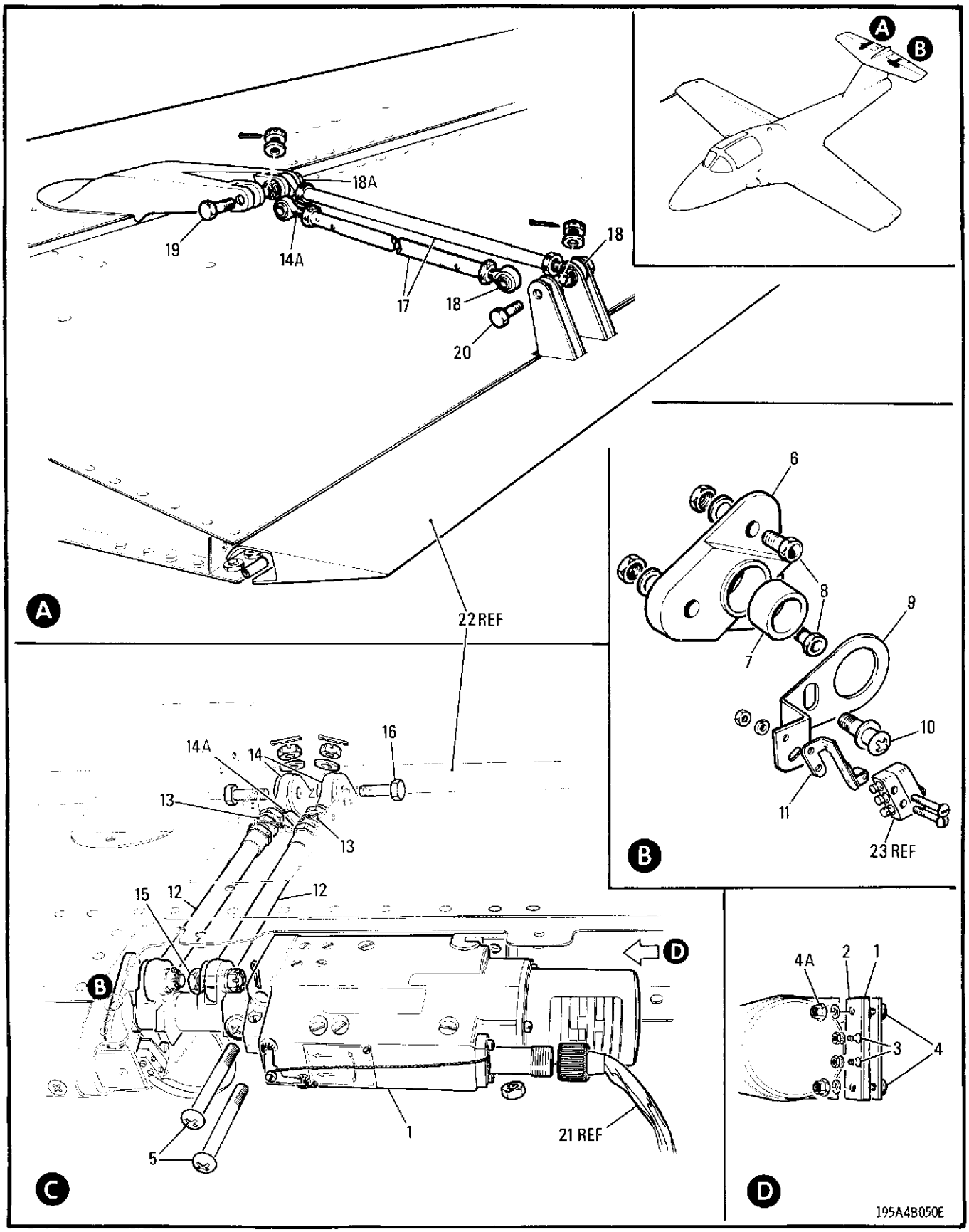

FIGURE 78 ELEVATOR TRIM & GEARED TAB CONTROLS

FIGURE AND INDEX NUMBER	GROUP	FLIGHT CONTROLS	EFFEC-TIVITY	UNITS PER ASSY
	MAJOR ASSEMBLY	ELEVATOR TRIM & GEARED TAB CONTROLS		
	PART NUMBER	1 2 3 4 5 6 7 NOMENCLATURE		
78 -	41A-90603-800	TAB CONTROL INSTL - ELEVATOR TRIM (SEE SECTION 2)		NP
- 1	R422M25-1	.ACTUATOR ASSY - (V36123) (ELEVATOR TRIM TAB) (IAW 41A-90702-14) FOR BRKDN SEE C-17-695-000/MS-000		1
	E8058	..FILTER - (V36123)		1
	MS28775-010	..PACKING		1
- 2	41A-90733-2	.PLATE - PACKING		1
- 3	AN507-440R7	.SCREW		2
	AN960PD4	.WASHER		2
	MS21042L04	.NUT		2
- 4	41A-90733	.PLATE ASSY - MOUNTING		1
- 4A	MS21042L4	.NUT		2
- 5	41A-90603-2	.BOLT		2
	41A-90603-954	.SHIM - LAMINATED		AR
	41A-90601	.BEARING ASSY		1
- 6	41A-90601-2	..HOUSING - BEARING		1
- 7	41A-90601-4	..BEARING		1
- 8	NAS1103-3	.BOLT		2
- 9	41A-90609	.BRACKET - TAB NEUTRAL SWITCH MOUNTING		1
-10	AN3-6A	.BOLT		1
	AN936B10	.LOCK WASHER		1
-11	JS5	.ACTUATOR - (MHR)		1
	41A-90606	.ROD ASSY - ELEVATOR TRIM TAB		2
-12	41A-90604	..ROD ASSY		1
	41A-90604-2	...ROD END		1
	HSBG3	...BEARING - (V97613)		1
	MS21209F4-15	...INSERT		1
-13	41A-90605	..ADJUSTER		1
	NAS509-4	..NUT		1
	NAS509L4	..NUT		1
-14	HRBML3FN	..ROD END ASSY - (V97613)		1
-14A	MS9048-006	..PIN		4
-15	NAS1103-7D	.BOLT		2
R -16	41A90603-14	.BOLT - (MADE FROM NAS6203-11D)		2
	AN960PD10	.WASHER		4
	AN320-3	.NUT		4
	MS24665-153	.COTTER PIN		4
	41A-90608	TAB CONTROL INSTL - ELEVATOR GEARED (SEE SECTION 2)		NP
	41A-90607	.ROD ASSY - ELEVATOR GEARED TAB		2
-17	41A-90607-4	..ROD		1
-18	MS21151-7C	..ROD END		1
-18A	HRBLL3E	..ROD END - (V97613)		1
	NAS509-4	..NUT		1
	NAS509L4	..NUT		1
-19	NAS1103-9D	.BOLT		2
-20	NAS1103-10D	.BOLT		2
	AN960PD10	.WASHER		4
	AN320-3	.NUT		4
	MS24665-134	.COTTER PIN		4
-21	41A-57800	HARNESS ASSY - T918 TO ELEVATOR (SEE SECTION 12)		REF
-22	41A-24002	TAB ASSY - ELEVATOR (TRIM & GEARED) (SEE SECTION 2)		REF
-23	MS25085-1	SWITCH ASSY - (SEE SECTION 12)		REF

-000-

SECTION 8

HYDRAULIC SYSTEM

TABLE OF CONTENTS

FIGURE	TITLE	PAGE
79	HYDRAULIC SYSTEM	8-02
80	COMPLETE HYDRAULIC SYSTEM	8-04
81	NOSE WHEEL WELL HYDRAULIC SYSTEM	8-06
82	FUSELAGE STA 149-206 HYDRAULIC SYSTEM	8-10
82A	LANDING GEAR EMERGENCY VALVE CONTROL	8-14
83	BRAKE HYDRAULIC SYSTEM	8-16
84	FUSELAGE STA 206-277 HYDRAULIC SYSTEM	8-20
85	ENGINE COMPARTMENT HYDRAULIC SYSTEM	8-22
86	ENGINE COMPARTMENT HYDRAULIC VALVES & FILTERS	8-26
87(1OF2)	ENGINE COMPARTMENT HYDRAULIC SYSTEM	8-30
87(2OF2)	ENGINE COMPARTMENT HYDRAULIC SYSTEM	8-30B
88	WING FILLET HYDRAULIC SYSTEM	8-34
89	MAIN LANDING GEAR & DOOR HYDRAULIC SYSTEM	8-38
90	FLAP ACTUATOR HYDRAULIC SYSTEM	8-44
91	SPEEDBRAKE ACTUATOR & HYDRAULIC LINES	8-46

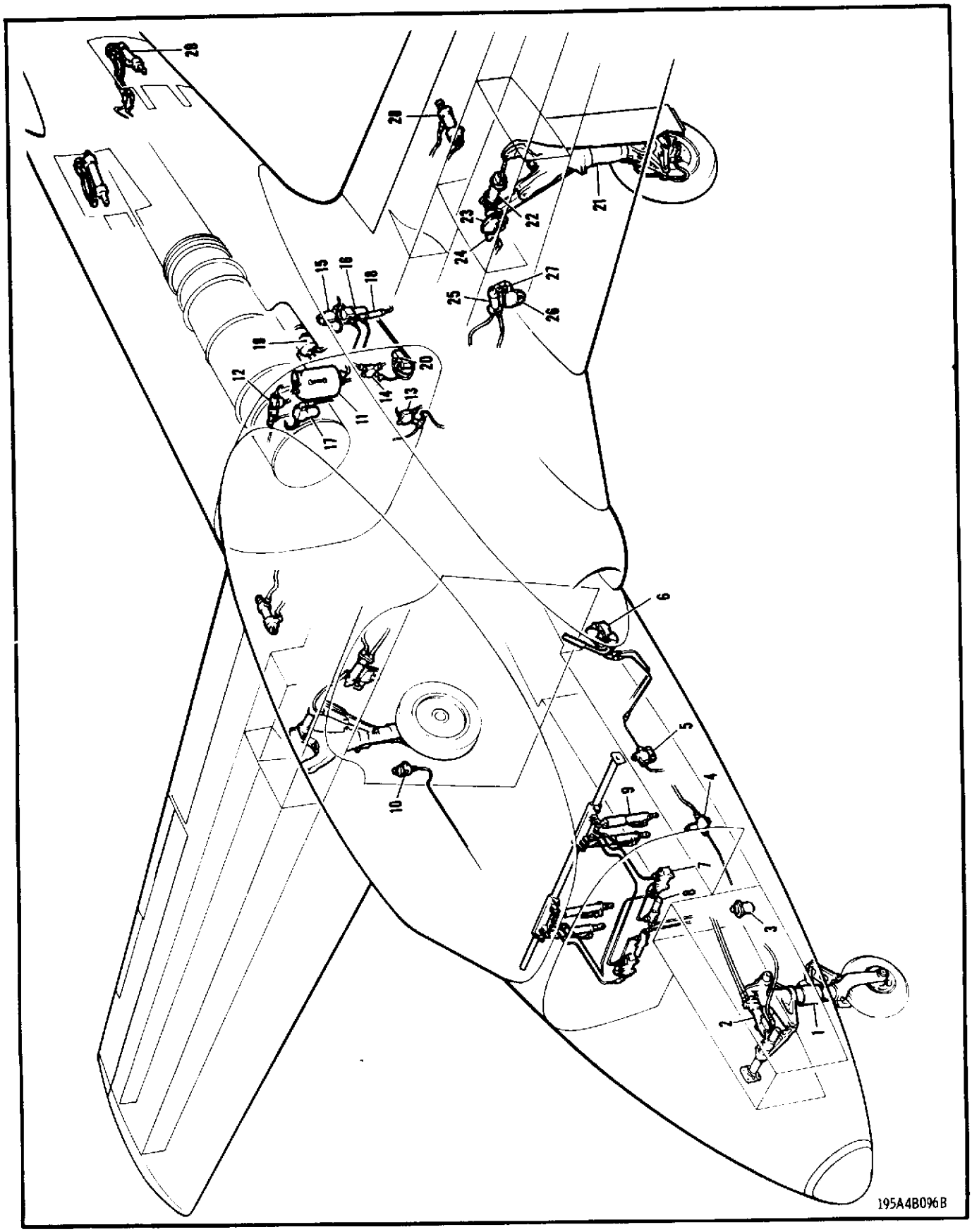

FIGURE 79 HYDRAULIC SYSTEM

FIGURE AND INDEX NUMBER	GROUP	HYDRAULIC SYSTEM	EFFEC-TIVITY	UNITS PER ASSY
	MAJOR ASSEMBLY	HYDRAULIC SYSTEM		
	PART NUMBER	1 2 3 4 5 6 7 NOMENCLATURE		
79 - 1	41A-85021	STRUT ASSY - NOSE GEAR SHOCK (SEE SECTION 4)		REF
- 2	3291000-15	ACTUATOR ASSY - NOSE GEAR (SEE FIG. 81)		REF
- 3	ST106N	TRANSMITTER - HYDRAULIC PRESSURE (SEE SECTION 14)		REF
- 4	6770-3	VALVE - NOSE WHEEL STEERING SHUT OFF (SEE FIG. 82)		REF
- 5	3292000-1	VALVE ASSY - EMERGENCY SYS SELECTOR (SEE FIG. 82)		REF
- 6	41A-42315-14	HANDPUMP ASSY - HYDRAULIC (SEE FIG. 82)		REF
- 7	70776	VALVE ASSY - MASTER BRAKE CYLINDER TRANSFER (SEE FIG. 83)		REF
- 8	70775-1	VALVE ASSY - PARKING BRAKE (SEE FIG. 83)		REF
- 9	70777	CYLINDER ASSY - BRAKE MASTER (SEE FIG. 83)		REF
-10	41A-75126	RESERVOIR ASSY - BRAKE HYDRAULIC (SEE FIG. 83)		REF
-11	41A-75023-800	RESERVOIR ASSY - MAIN HYDRAULIC (SEE FIG. 85)		REF
-12	41A-75105	REGULATOR & FILTER ASSY - AIR PRESSURE (SEE FIG. 85)		REF
-13	41A-75102-6	VALVE ASSY - LANDING GEAR SELECTOR (SEE FIG. 86)		REF
-14	41A-75102-800	VALVE ASSY - M/LDG/GR DOOR SELECTOR (SEE FIG. 86)		REF
-15	41A-75102-2	VALVE ASSY - SPEEDBRAKE SELECTOR (SEE FIG. 86)		REF
-16	41A-75107-800	FILTER ASSY - MAIN PRESSURE (SEE FIG. 86)		REF
-17	41A-75108	FILTER ASSY - MAIN RETURN (SEE FIG. 86)		REF
-18	41A-75106	VALVE ASSY - MAIN SYS PRESSURE RELIEF (SEE FIG. 87)		REF
R -19	41A-42332	PUMP ASSY - ENGINE DRIVEN HYDRAULIC (SEE C-14-165-000/MY-000, PART 2A)		REF
-20	41A-75103	VALVE ASSY - FLAP SELECTOR (SEE FIG. 88)		REF
-21	41A-87503	STRUT ASSY - MAIN LANDING GEAR SHOCK (SEE SECTION 4)		REF
-22	41A-75117-800	ACTUATOR ASSY - MAIN GEAR (PORT) (SEE FIG. 89)		REF
-23	41A-87508-804	UPLOCK ASSY - MAIN GEAR (SEE SECTION 4)		REF
-24	41A-75116-18	ACTUATOR ASSY - M/LDG/GR UPLOCK (PORT) (SEE FIG. 89)		REF
-25	41A-75119	ACTUATOR ASSY - MAIN LANDING GEAR DOOR (SEE FIG. 89)		REF
-26	41A-87520-804	UPLOCK ASSY - MAIN GEAR DOOR (SEE SECTION 4)		REF
-27	41A-75116-16	ACTUATOR ASSY - M/LDG/GR DOOR UPLOCK (PORT) (SEE FIG. 89)		REF
-28	41A-75120	ACTUATOR ASSY - FLAP (SEE FIG. 90)		REF
-29	41A-75113-800	ACTUATOR ASSY - SPEEDBRAKE (SEE FIG. 91)		REF

-000-

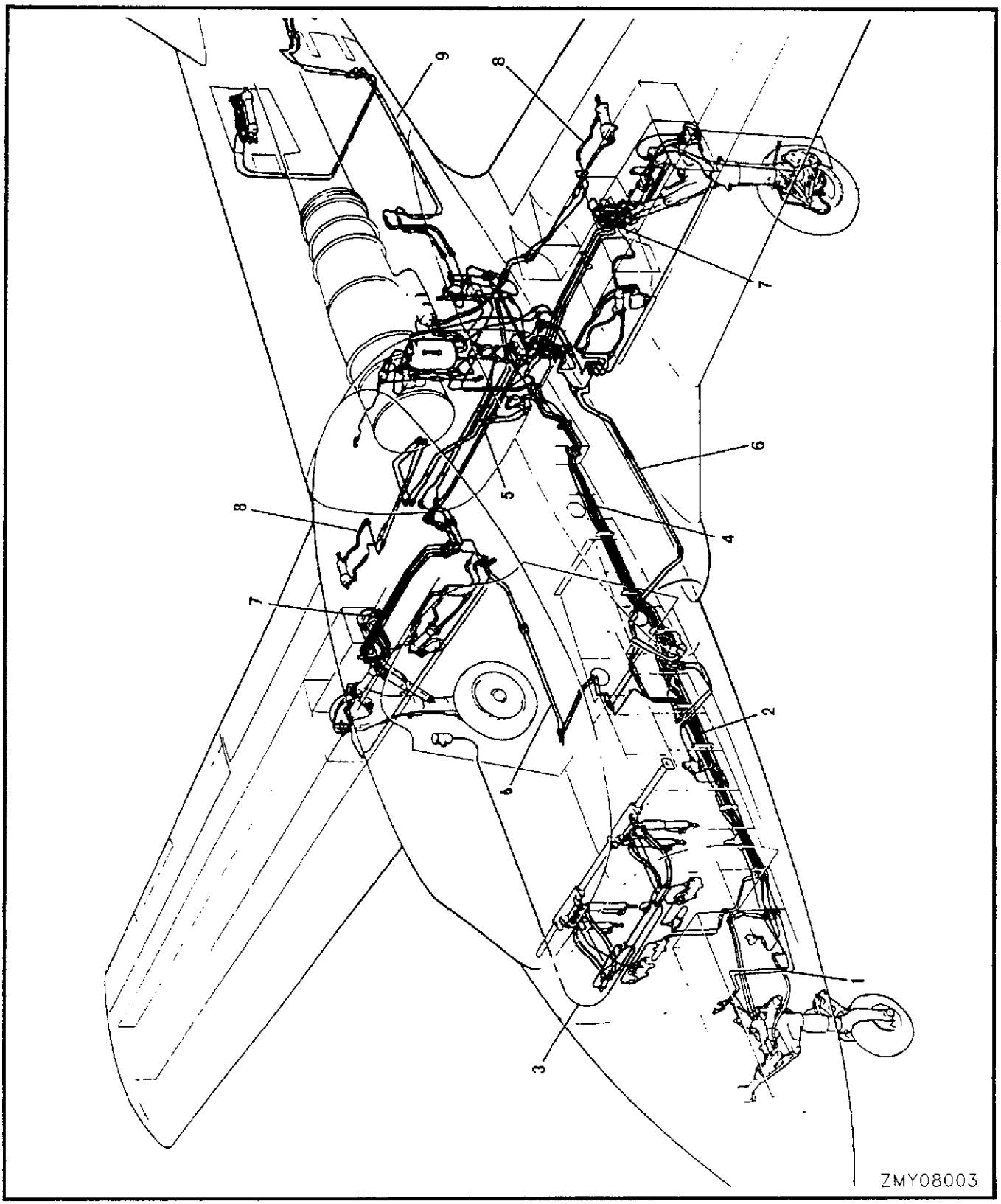

FIGURE 80 COMPLETE HYDRAULIC SYSTEM

FIGURE AND INDEX NUMBER	GROUP	HYDRAULIC SYSTEM	EFFEC-TIVITY	UNITS PER ASSY
	MAJOR ASSEMBLY	COMPLETE HYDRAULIC SYSTEM		
	PART NUMBER	1 2 3 4 5 6 7 NOMENCLATURE		
80 -	41A-42300	HYDRAULIC SYS INSTL - FORWARD FUSELAGE (SEE SECTION 3)		NP
- 1	41A-42303	.HYDRAULIC SYS INSTL - NOSE WHEEL WELL (SEE FIG. 81)		REF
- 2	41A-42304	.HYDRAULIC SYS INSTL - FUSELAGE STA 149-206 (SEE FIG. 82)		REF
- 3	41A-75050	.HYDRAULIC SYS INSTL - BRAKE (SEE FIG. 83)		REF
- 4	41A-42305	.HYDRAULIC SYS INSTL - FUSELAGE STA 206-277 (SEE FIG. 84)		REF
- 5	41A-42302	.HYDRAULIC SYS INSTL - ENGINE COMPARTMENT (SEE FIG. 85)		REF
- 6	41A-42323	.HYDRAULIC SYS INSTL - WING FILLET (SEE FIG. 88)		REF
- 7	41A-42301	HYDRAULIC SYS INSTL - MAIN LANDING GEAR & DOOR (SEE FIG. 89)		REF
- 8	41A-42307	HYDRAULIC SYS INSTL - FLAP ACTUATOR (SEE FIG. 90)		REF
- 9	41A-42306	HYDRAULIC SYS INSTL - REAR FUSELAGE (SEE FIG. 91)		REF

-OOO-

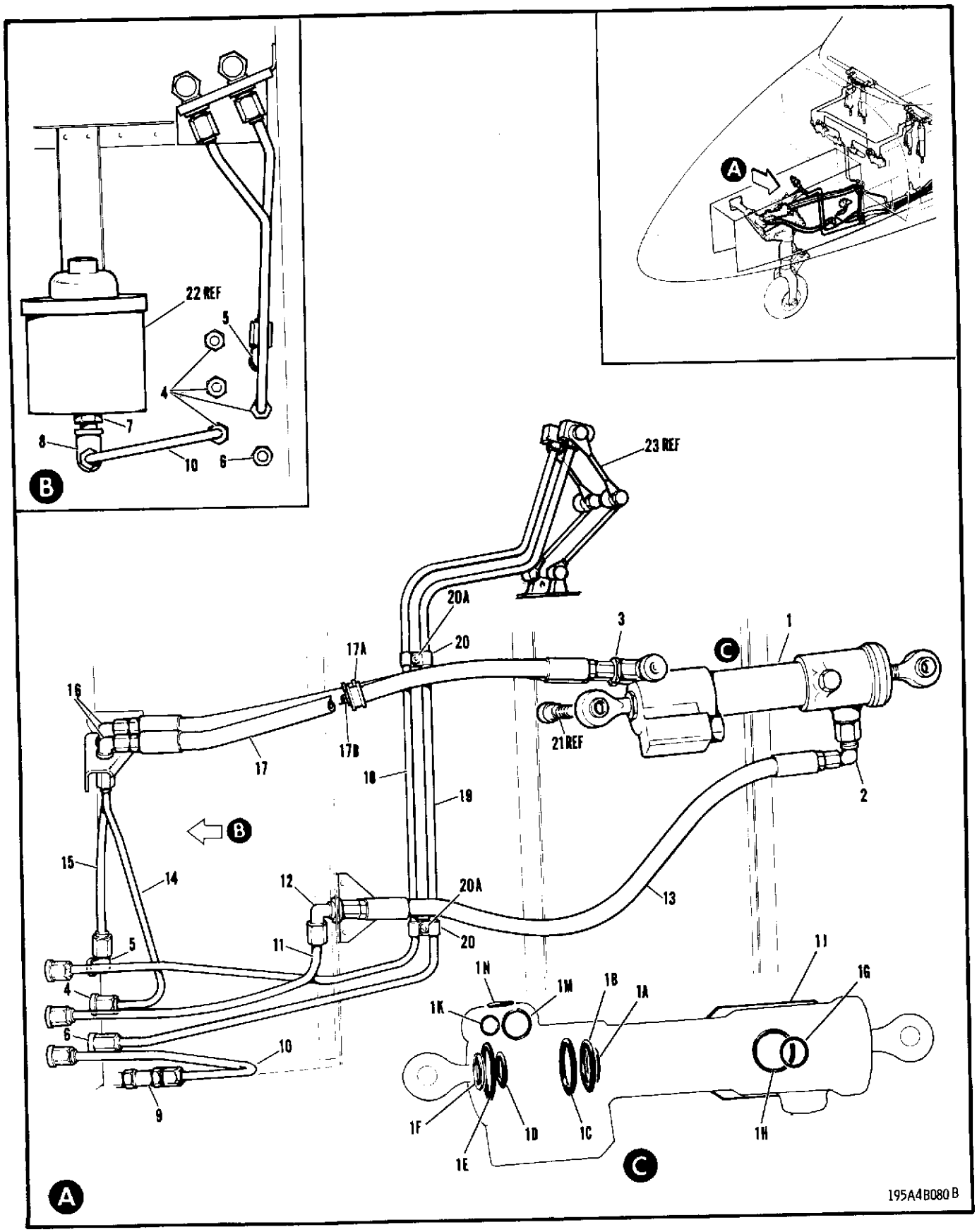

FIGURE 81 WHEEL WELL HYDRAULIC SYSTEM

	FIGURE AND INDEX NUMBER	GROUP	HYDRAULIC SYSTEM	EFFEC-TIVITY	UNITS PER ASSY
		MAJOR ASSEMBLY	NOSE WHEEL WELL HYDRAULIC SYSTEM		
		PART NUMBER	1 2 3 4 5 6 7 NOMENCLATURE		
	81 -	41A-42303	HYDRAULIC SYS INSTL - NOSE WHEEL WELL (SEE FIG. 80)		NP
		41A-75118-806 *	.ACTUATOR ASSY - NOSE GEAR (MOD) (FOR SPARES ORDER 41A-75118-808)		1
		41A-75118-808 *	.ACTUATOR ASSY - NOSE GEAR (MOD) (SPARE FOR 41A-75118-806)		
R	- 1	3291000-15	..ACTUATOR ASSY - (V35962) (NOSE GEAR) (AS PER 41A-75013-806) (FOR BKDN SEE C-13-501-000/MS-000) (FOR SPARES ORDER 3291000-15)		1
R		3291000-17	..ACTUATOR ASSY - (V35962) (NOSE GEAR) (SPARE FOR 3291000-15)		
R		3290012-3	...PISTON ASSY - (V35962)		1
	- 1A	MS28775-016	....PACKING		1
	- 1B	MS28775-213	....PACKING		1
	- 1C	MS28775-216	...PACKING		1
		MS28774-216	...RETAINER		2
	- 1D	MS28775-116	...PACKING		1
		MS28774-116	...RETAINER		2
	- 1E	MS28775-028	...PACKING		2
R	- 1F	205000L3/4	...SCRAPER - ROD (V05695)		1
	- 1G	MS28775-012	...PACKING		2
	- 1H	MS28775-016	...PACKING		2
R	- 1J	3290042-1	...GASKET - (V35962)		2
	- 1K	MS28775-007	...PACKING		2
	- 1M	MS28775-015	...PACKING		4
	- 1N	MS28775-009	...PACKING		1
	- 2	MS21908D4	..ELBOW		1
		AN6289D4	..NUT		1
		MS28778-4	..PACKING		1
		MS9058-04	..RING		1
	- 3	MS21902D4	..UNION		2
		MS28778-4	..PACKING		2
	- 4	MS21924D4	.UNION - (FUSELAGE STA 149)		4
	- 5	MS21908D4	.ELBOW - (FUSELAGE STA 149)		1
R	- 6	S1289D6-4	.REDUCER - (V88308) (FUSELAGE STA 149)		1
		AN960PD716	.WASHER		6
		AN924-4D	.NUT		6
	- 7	MS21924D4	.UNION - (HYD PRESSURE TRANSMITTER)		1
		AN6289D4	.NUT		1
		MS28778-4	.PACKING		3
		MS9058-04	.RING		1
	- 8	AN939D4	.ELBOW - (HYD PRESSURE TRANSMITTER)		1
R	- 9	19D2-2	.SNUBBER - (V76906) (AS PER 28-75817)		1
	-10	41A-42326-12	.LINE ASSY - PRESSURE TRANSMITTER		1
	-11	41A-42326-2	.LINE ASSY - NOSE LANDING GEAR UP		1
	-12	MS21908-4	.ELBOW		1
		AN960PD716	.WASHER		1
		AN924-4D	.NUT		1
		*	IAW C-12-114-000/CF-282 & C-13-501-000/CF-001		

	FIGURE AND INDEX NUMBER	GROUP	HYDRAULIC SYSTEM	EFFEC-TIVITY	UNITS PER ASSY
		MAJOR ASSEMBLY	NOSE WHEEL WELL HYDRAULIC SYSTEM		
		PART NUMBER	1 2 3 4 5 6 7 NOMENCLATURE		
R	81 -13	AE1002256E0220	.HOSE ASSY - (LANDING GEAR UP)		1
	-14	41A-42326-4	.LINE ASSY - NOSE LANDING GEAR DOWN		1
	-15	41A-42326-6	.LINE ASSY - NOSE LDG/GR EMERGENCY DOWN		1
	-16	MS21908-4	.ELBOW		2
		AN960PD716	.WASHER		2
		AN924-4D	.NUT		2
R	-17	AE1002256E0200	.HOSE ASSY - (LANDING GEAR DOWN & EMERGENCY DOWN)		2
	-17A	MS21919WDG9	.CLAMP		2
	-17B	NAS623-3-4	.SCREW		1
		AN960PD10	.WASHER		1
		MS21042L3	.NUT		1
	-18	41A-42326-8	.LINE ASSY - STEERING PRESSURE		1
	-19	41A-42326-10	.LINE ASSY - RETURN		1
	-20	AN742D4	.CLAMP		2
	-20A	NAS623-3-2	.SCREW		2
		MS35335-32	.LOCK WASHER		2
	-21	41A-85018	BOLT - NOSE LDG/GR (ACTUATOR RETAINING) (SEE SECTION 4)		REF
	-22	ST106N	TRANSMITTER - HYD PRESSURE (SEE SECTION 12)		REF
	-23	3295000-4	SWIVEL ASSY - NOSE GEAR (SEE SECTION 4)		REF

-OOO-

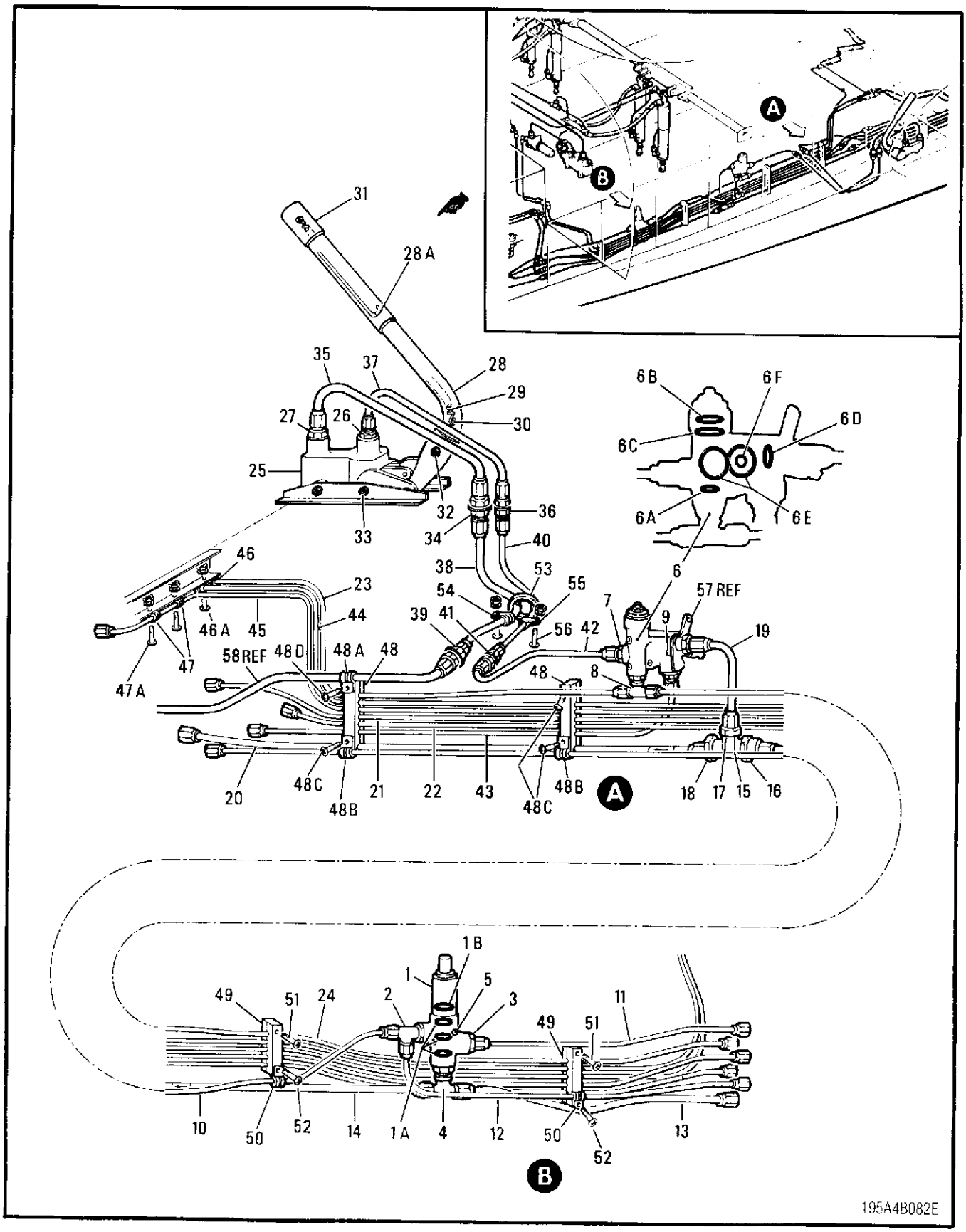

FIGURE 82 FUSELAGE STA 149-206 HYDRAULIC SYSTEM

	FIGURE AND INDEX NUMBER	GROUP: HYDRAULIC SYSTEM MAJOR ASSEMBLY: FUSELAGE STA 149-206 HYDRAULIC SYSTEM PART NUMBER	1 2 3 4 5 6 7 NOMENCLATURE	EFFEC-TIVITY	UNITS PER ASSY
	82 -	41A-42304	HYDRAULIC SYS INSTL - FUSELAGE STA 149-206 (SEE FIG. 80)		NP
		41A-75101-80C	.VALVE ASSY - NOSE WHEEL STEERING SHUT OFF		1
R	- 1	677C-3	..VALVE ASSY - (V02121) (NOSE WHEEL STEERING SHUT OFF) (AS PER 41A-75004-2) (FOR BKDN SEE C-13-883-000/MS-000)		1
	- 1A	MS28775-015	...PACKING		3
	- 1B	MS28775-023	...PACKING		1
		MS28774-023	...RETAINER		2
	- 2	MS21912-4	..TEE - (PRESSURE)		1
		AN6289D4	..NUT		1
R		S1422-4	..PACKING - (V88308)		1
		MS9058-04	..RING		1
	- 3	MS21902-4	..UNION - (CYLINDER)		1
R		S1422-4	..PACKING - (V88308)		1
R	- 4	MS21909D6	..TEE - (RETURN)		1
		AN6289D6	..NUT		1
R		S1422-6	..PACKING - (V88308)		1
		MS9058-06	..RING		1
	- 5	NAS623-3-34	.SCREW		2
		NAS43003-32	.SPACER		2
		41A-75100	.VALVE ASSY - EMERGENCY SYS SELECTOR		1
R	- 6	329200-1	..VALVE ASSY - (V35962) (EMERGENCY SYS SEL) (AS PER 41A-75003-2) (FOR BKDN SEE C-13-500-000/MS-000)		1
	- 6A	MS28775-010	...PACKING		1
		MS28774-010	...RETAINER		1
	- 6B	MS28775-009	...PACKING		1
	- 6C	MS28775-015	...PACKING		1
	- 6D	MS28775-012	...PACKING		1
		MS28774-012	...RETAINER		1
	- 6E	MS28775-020	...PACKING		2
		MS28774-020	...RETAINER		2
	- 6F	MS28775-012	...PACKING		2
	- 7	MS21902D4	..UNION		1
R		S1422-4	..PACKING - (V88308)		1
	- 8	MS21909D4	..TEE		1
		AN6289D4	..NUT		1
R		S1422-4	..PACKING - (V88308)		1
		MS9058-04	..RING		1
	- 9	NAS623-3-4	.SCREW		3
		41A-42304-2	.WASHER		1
		41A-42304-3	.WASHER		1
	-10	41A-42326-84	.LINE ASSY - PRESSURE		1
	-11	41A-42326-22	.LINE ASSY - STEERING PRESSURE		1
	-12	41A-42326-14	.LINE ASSY - STEERING PRESSURE		1
	-13	41A-42326-50	.LINE ASSY - RETURN		1
	-14	41A-42326-62	.LINE ASSY - RETURN		1
	-15	AN938D6	.TEE		1
R	-16	1112-589977	.VALVE - (V92003) (CHECK)		1
	-17	MS21916D6-4	.REDUCER		1
	-18	MS21902D6	.UNION		1
R		S1422-6	.PACKING - (V88308)		3
	-19	41A-42326-72	.LINE ASSY - RETURN		1
	-20	41A-42326-54	.LINE ASSY - RETURN		1
	-21	41A-42326-26	.LINE ASSY - NOSE LANDING GEAR UP		1
	-22	41A-42326-24	.LINE ASSY - NOSE LANDING GEAR DOWN		1
	-23	41A-42326-36	.LINE ASSY - NOSE LANDING GEAR EMERGENCY DOWN		1
	-24	41A-42326-34	.LINE ASSY - NOSE LANDING GEAR EMERGENCY DOWN		1
		41A-42337	.HANDPUMP INSTL - HYDRAULIC		NP
		41A-42315-10	..HANDPUMP ASSY - HYDRAULIC (FOR SPARES ORDER 41A-42315-14)		1
		41A-42315-14	..HANDPUMP ASSY - (SPARE FOR 41A-42315-10)		

	FIGURE AND INDEX NUMBER	GROUP	HYDRAULIC SYSTEM	EFFEC-TIVITY	UNITS PER ASSY
		MAJOR ASSEMBLY	FUSELAGE STA 149-206 HYDRAULIC SYSTEM		
		PART NUMBER	1 2 3 4 5 6 7 NOMENCLATURE		
	82 -25	AN6201-1	...HANDPUMP - HYDRAULIC FOR BKDN SEE C-13-395-000/MS-V02 (FOR SPARES ORDER 41A-42315-12)		1
		41A-42315-12	...HANDPUMP ASSY - (MADE FROM AN6201-1)		
	-26	MS21916D8-6	...REDUCER		1
R		S1422-8	...PACKING - (V88308)		1
	-27	MS21916D6-4	...REDUCER		1
R		S1422-6	...PACKING - (V88308)		1
		41A-42310-12	...HANDLE ASSY - HYDRAULIC HANDPUMP		1
	-28	41A-42311-2	....HANDLE - HYDRAULIC HANDPUMP		1
		41A-42312	....HANDLE - HYD HANDPUMP EXTENSION		1
	-28A	MS20604ML4W3	....RIVET BLIND – (EXTENSION HANDLE ATTACHING)		1
	-29	41A-42314	....SPRING - HYD HANDPUMP HANDLE EXTENSION		1
	-30	NAS561P4-18	....PIN		2
	-31	21GM4-190	....TIP - (RUF) (VIMY PATTERN RUBBER)		1
	-32	MS27039-1-28	...SCREW - (HANDLE RETAINING) (FOR SPARES USE MS 27039-1-24)		1
		MS27039-1-24	...SCREW - (SPARE FOR MS27039-1-28)		
		AN960PD10L	...WASHER		1
		MS21042L3	...NUT		1
		LAC24-426	...TAPE - (TYPE 11)		AR
	-33	NAS623-4-42	..SCREW - (PUMP RETAINING)		2
		NAS43DD4-16	..SPACER		2
		AN960-416	..WASHER		2
		MS21042L4	..NUT		2
	-34	MS21924D6	..UNION		1
		AN960PD916	..WASHER		1
		AN924-6	..NUT		1
	-35	41A-42327-24	..LINE ASSY - HANDPUMP SUCTION		1
	-36	MS21924-4	..UNION		1
		AN960PD716	..WASHER		1
		AN924-4	..NUT		1
	-37	41A-42327-22	..LINE ASSY - HANDPUMP PRESSURE		1
	-38	41A-42326-62	.LINE ASSY - HANDPUMP SUCTION		1
	-39	MS21924D6	.UNION		1
		AN960PD916	.WASHER		1
		AN924-6D	.NUT		1
	-40	41A-42326-30	.LINE ASSY - HANDPUMP PRESSURE		1
	-41	MS21924D4	.UNION		1
		AN960PD716	.WASHER		1
		AN924-4D	.NUT		1
	-42	41A-42326-32	.LINE ASSY - HANDPUMP PRESSURE		1
	-43	41A-42326-82	.LINE ASSY - HANDPUMP PRESSURE		1
	-44	41A-42326-42	.LINE ASSY - LH BRAKE		1
	-45	41A-42326-46	.LINE ASSY - RH BRAKE		1
R	-46	316-4-8	.CLIP - (V00502) (FUS STA 206 BRAKE TO EMERGENCY DOWN LINE)		2
	-46A	NAS623-3-4	.SCREW		1
		AN960PD10	.WASHER		1
		MS21042L3	.NUT		1
R	-47	316-4-8	.CLIP - (V00502) (FUS STA 206 LH BRAKE LINE)		2
	-47A	NAS623-3-2	.SCREW		2
		AN960PD10L	.WASHER		2
		MS21042L3	.NUT		2
	-48	41A-42317	.SUPPORT ASSY - LINE		2
R	-48A	316-6-8	.CLIP - (V00502) (HANDPUMP SUCTION)		1
R	-48B	316-4-8	.CLIP - (V00502) (PRESSURE LINE)		2
	-48C	NAS623-3-21	.SCREW		3
	-48D	NAS623-3-34	.SCREW		1
	-49	41A-42316	.SUPPORT ASSY - LINE		2
R	-50	316-4-8	.CLIP - (V00502)		2
	-51	NAS623-3-21	.SCREW		2

FIGURE AND INDEX NUMBER	GROUP	HYDRAULIC SYSTEM	EFFEC-TIVITY	UNITS PER ASSY
	MAJOR ASSEMBLY	FUSELAGE STA 149-206 HYDRAULIC SYSTEM		
	PART NUMBER	1 2 3 4 5 6 7 NOMENCLATURE		
82 -52	NAS623-3-22	.SCREW		2
-53	41A-42304-68	.GROMMET		1
R -54	316-4-8	.CLIP - (V00502)		1
R -55	316-6-8	.CLIP - (V00502)		1
-56	NAS623-3-2	.SCREW		2
	AN960PD10	.WASHER		2
	MS21042L3	.NUT		2
-57	41A-90021-10	LEVER ASSY - LANDING GEAR EMERGENCY (SEE FIG. 82A)		REF
-58	41A-42326-64	LINE ASSY - HANDPUMP SUCTION (SEE FIG. 84)		REF

-000-

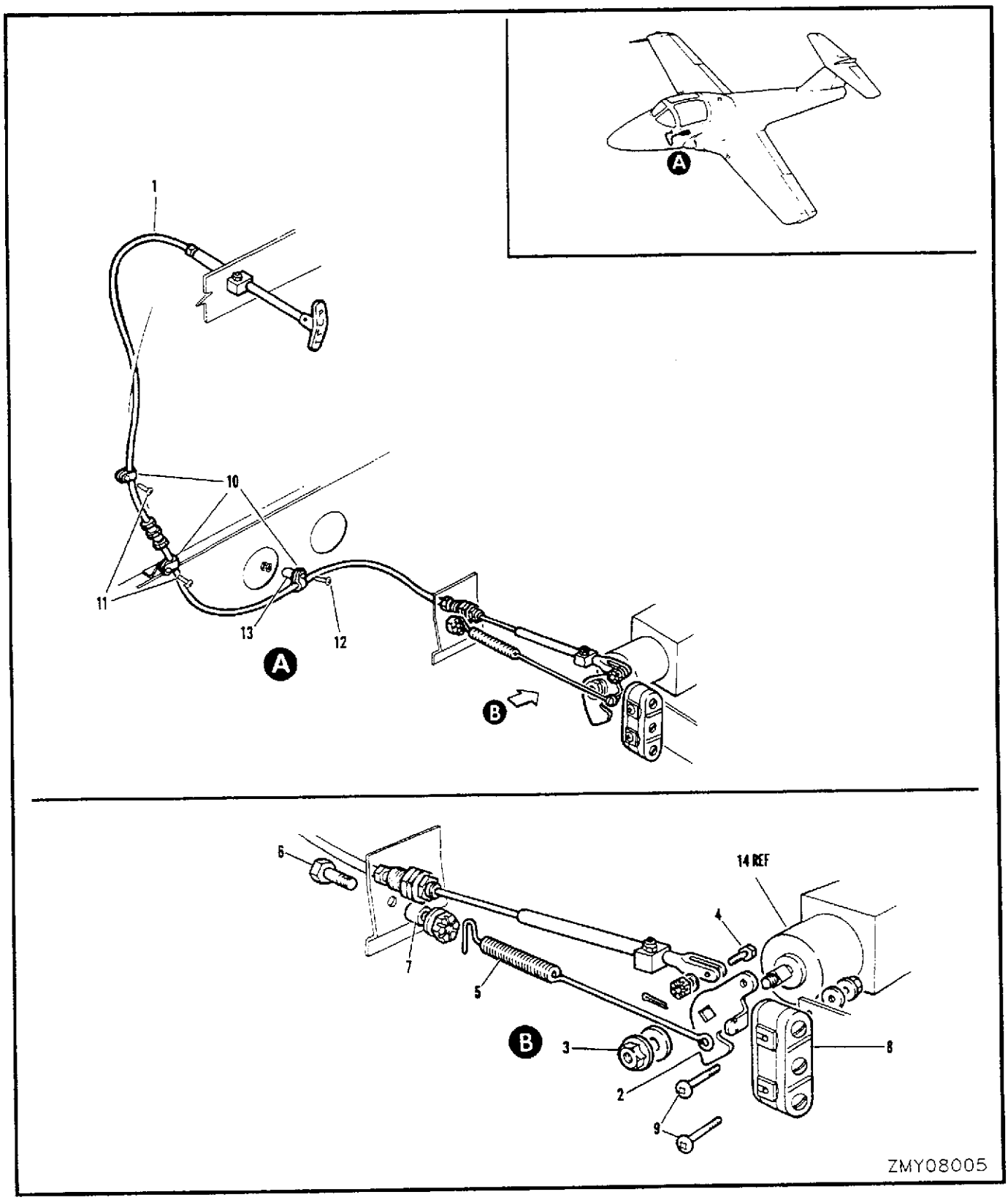

FIGURE 82A LANDING GEAR EMERGENCY VALVE CONTROL

FIGURE AND INDEX NUMBER	GROUP	HYDRAULIC SYSTEM	EFFEC-TIVITY	UNITS PER ASSY
	MAJOR ASSEMBLY	LANDING GEAR EMERGENCY VALVE CONTROL		
	PART NUMBER	1 2 3 4 5 6 7 NOMENCLATURE		
82A -	41A-90020	VALVE CONTROL INSTL - LANDING GEAR EMERGENCY (SEE SECTION 3)		NP
- 1	40253	.VALVE CONTROL ASSY - (V78710) (LANDING GEAR EMERGENCY) (AS PER 41A-90023-800)		1
- 2	41A-90021-16	.LEVER ASSY - LANDING GEAR EMERGENCY		1
	AN960PD416	.WASHER		1
- 3	MS21042L4	.NUT		1
- 4	NAS1103-4D	.BOLT		1
	AN960PD10L	.WASHER		1
	AN320-3	.NUT		1
	MS24665-151	.COTTER PIN		1
- 5	41A-90022	.SPRING - LDG/GR EMERGENCY SELECTOR VALVE EXTENSION		1
R - 6	NAS6204-16D	.BOLT		1
- 7	NAS43DD4-64	.SPACER		1
	AN960PD416	.WASHER		1
	AN320-3	.NUT		1
- 8	MS25011-1	.SWITCH		1
- 9	MS35206-328	.SCREW		2
	AN960-6L	.WASHER		AR
	MS21042L06	.NUT		2
-10	A5506	.CLIP - (V78710)		3
-11	MS35207-263	.SCREW		2
-12	MS35207-269	.SCREW		1
-13	NAS43DD3-64	.SPACER		1
	AN960PD10L	.WASHER		3
	MS21042L3	.NUT		3
-14	3292000-1	VALVE ASSY - EMERGENCY SYS SELECTOR (SEE FIG. 82)		REF

-OOO-

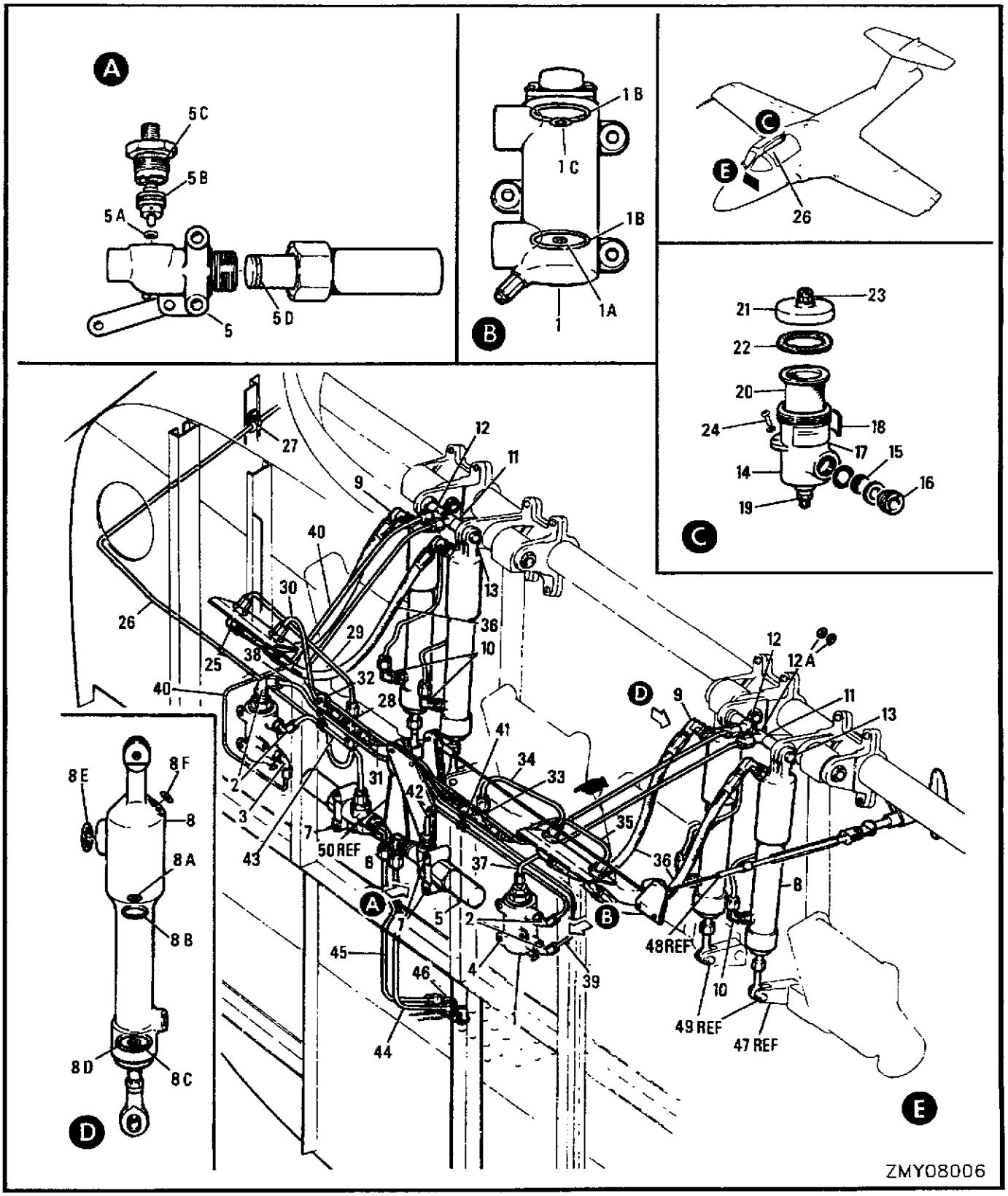

FIGURE 83 BRAKE HYDRAULIC SYSTEM

	FIGURE AND INDEX NUMBER	GROUP		HYDRAULIC SYSTEM	EFFEC-TIVITY	UNITS PER ASSY
		MAJOR ASSEMBLY		BRAKE HYDRAULIC SYSTEM		
		PART NUMBER		1 2 3 4 5 6 7 NOMENCLATURE		
	83 -	41A-75050		HYDRAULIC SYS INSTL - BRAKE (SEE FIG. 80)		NP
		41A-75111-18	*	.VALVE ASSY - BRAKE MASTER CYLINDER TRANSFER (PORT)		1
		41A-75111-20	*	.VALVE ASSY - BRAKE MASTER CYLINDER TRANSFER (STBD)		1
	- 1	70776		..VALVE ASSY - (V00502) (MASTER BRAKE CYLINDER TRANSFER) (AS PER 41A-75008) (FOR BKDN SEE C-13-250-000/MS-000)		1
R	- 1A	MS28775-008		...PACKING		1
R	- 1B	MS28775-214		...PACKING		2
		215027		...POPPET ASSY - (V00502)		1
R	- 1C	MS28775-110		....PACKING		1
	- 2	MS21907D4		..ELBOW - (3 ON PORT & 2 ON STBD)		5
	- 3	MS21908D4		..ELBOW - (STBD)		1
		AN6289D4		..NUT		2
		MS28778-4		..PACKING		2
		MS28777-4		..RING		2
	- 4	NAS623-3-7		.SCREW		6
		AN960PD10		.WASHER		6
		41A-75112-8	*	.VALVE ASSY - PARKING BRAKE (PORT)		1
		41A-75112-6	*	.VALVE ASSY - PARKING BRAKE (STBD)		1
	- 5	70775-2		..VALVE ASSY - (V00502) (PARKING BRAKE PORT) (AS PER 41A-75009-2) (FOR BKDN SEE C-13-249-000/MS-000)		1
		70775-1		..VALVE ASSY - (V00502) (PARKING BRAKE STBD) (AS PER 41A-75009) (FOR BKDN SEE C-13-249-000/MS-000)		1
R	- 5A	MS28775-006		...PACKING		1
R	- 5B	MS28775-111		...PACKING		1
	- 5C	MS28778-8		...PACKING		1
R	- 5D	MS28775-114		...PACKING		1
	- 6	MS21908D4		..ELBOW		1
		AN6289D4		..NUT		1
		MS28778-4		..PACKING		1
		MS28777-4		..RING		1
	- 7	MS27039-1-30		.SCREW		4
		AN960PD10L		.WASHER		4
	- 8	70777		.CYLINDER ASSY - (V00502) (BRAKE MASTER) (AS PER 41A-75007) (FOR BKDN SEE C-13-248-000/MS-000)		4
	- 8A	MS28775-010		..PACKING		1
		MS28774-010		..RETAINER		1
	- 8B	MS28775-115		..PACKING		1
		MS28774-115		..RETAINER		1
	- 8C	MS28775-011		..PACKING		1
		MS28774-011		..RETAINER		1
	- 8D	MS28775-118		..PACKING		1
		MS28774-118		..RETAINER		1
	- 8E	MS28775-117		..PACKING		1
	- 8F	MS28778-4		..PACKING		1
	- 9	MS21908D4		.ELBOW - (BRAKE CYLINDER UPPER)		4
	-10	MS21926-4D		.ELBOW - (BRAKE CYLINDER LOWER)		4
		AN6289D4		.NUT		8
		MS28778-4		.PACKING		8
		MS28777-4		.RING		8
	-11	3294000-3		.JOINT ASSY - (V35962) (MASTER CYL SWIVEL) (AS PER 41A-75010-2)		2
	-12	3294000-4		.JOINT ASSY - (V35962) (MASTER CYL SWIVEL) (AS PER 41A-75010-4)		2
	-12A	MS28775-012		..PACKING		2
		30641-012		..SEAL		2
			*	IAW C-12-114-000/CF-321		

FIGURE AND INDEX NUMBER	GROUP	HYDRAULIC SYSTEM	EFFEC-TIVITY	UNITS PER ASSY
	MAJOR ASSEMBLY	BRAKE HYDRAULIC SYSTEM		
	PART NUMBER	1 2 3 4 5 6 7 NOMENCLATURE		
83 -13	41A-75050-10	.BOLT		4
	41A-75050-11	.WASHER		4
	41A-75126	.RESERVOIR ASSY - BRAKE HYDRAULIC		1
-14	41A-75268-2	..HOUSING - RESERVOIR		1
	41A-75126-16	..TUBE - ANTI SURGE		1
-15	41A-75126-13	..WINDOW - RESERVOIR SIGHT GAUGE		1
	MS28775-123	..PACKING		1
	S1246AB68-42-16	..WASHER - (V88308)		1
-16	41A-75126-14	..RETAINER - RESERVOIR SIGHT GAUGE WINDOW		1
-17	41A-75269	..NAMEPLATE - BRAKE RESERVOIR FILLING INSTRUCTION		1
-18	S1043M	..NAMEPLATE - (V88308)		1
-19	MS21902D4	..UNION		1
	MS28778-4	..PACKING		1
-20	41A-75403-8	..STRAINER ASSY - HYDRAULIC RESERVOIR		1
-21	41A-75268-4	..COVER - RESERVOIR		1
-22	41A-75270	..GASKET		1
-23	59911	..VALVE ASSY - (V00502) (CHECK)		1
	MS28778-4	..PACKING		1
-24	NAS623-3-3	.SCREW		3
	AN960PD10L	.WASHER		3
-25	MS21908D4	.ELBOW - (FUSELAGE STA 149)		4
	AN960PD716	.WASHER		4
	AN924-4D	.NUT		4
-26	41A-75202-28	.LINE ASSY - BRAKE PRESSURE		1
-27	316-4-8	.CLIP - (V00502)		4
	NAS623-3-3	.SCREW		4
	AN960PD10L	.WASHER		4
	MS21042L3	.NUT		4
-28	MS21906D4	.CROSS		1
-29	41A-75202-26	.LINE ASSY - BRAKE PRESSURE		1
-30	41A-75202-22	.LINE ASSY - BRAKE PRESSURE		1
-31	41A-75202-24	.LINE ASSY - BRAKE PRESSURE		1
-32	316-4-8	.CLIP - (V00502)		1
	MS27039-1-03	.SCREW		1
	AN960PD10L	.WASHER		1
-33	MS21905D4	.TEE		1
-34	41A-75202-20	.LINE ASSY - BRAKE PRESSURE		1
-35	41A-75202-18	.LINE ASSY - BRAKE PRESSURE		1
-36	AE7010010E0135	.HOSE ASSY - (IAW C-12-114-000/CF-431)		4
-37	41A-75202-42 *	.LINE ASSY - LH BRAKE PRESSURE (PORT)		1
-38	41A-75202-48 *	.LINE ASSY - RH BRAKE PRESSURE (PORT)		1
-39	41A-75202-44 *	.LINE ASSY - LH BRAKE PRESSURE (STBD)		1
-40	41A-75202-50 *	.LINE ASSY - RH BRAKE PRESSURE (STBD)		1
-41	316-4-8	.CLIP - (V00502) (FUSELAGE STA 149)		4
	NAS623-3-3	.SCREW		2
	AN960PD10L	.WASHER		2
	MS21042L3	.NUT		1
-42	41A-75202-46 *	.LINE ASSY - LH BRAKE PRESSURE (PORT)		1
-43	41A-75202-52 *	.LINE ASSY - RH BRAKE PRESSURE (STBD)		1
-44	41A-75202-8	.LINE ASSY - LH BRAKE PRESSURE (PORT)		1
-45	41A-75202-16	.LINE ASSY - RH BRAKE PRESSURE (STBD)		1
-46	MS21908D4	.ELBOW - (COCKPIT FLOOR)		2
	AN960PD716	.WASHER		2
	AN924-4D	.NUT		2
-47	41A-90232	LEVER - BRAKE CONTROL (SEE SECTION 7)		REF
-48	41A-90330	CABLE ASSY - PARKING BRAKE (SEE SECTION 7)		REF
R -49	NAS6204-15D	BOLT - (SEE SECTION 7)		REF
-50	41A-90328	CABLE ASSY - PARKING BRAKE (SEE SECTION 7)		REF
		-OOO-		
	*	IAW C-12-114-000/CF-321		

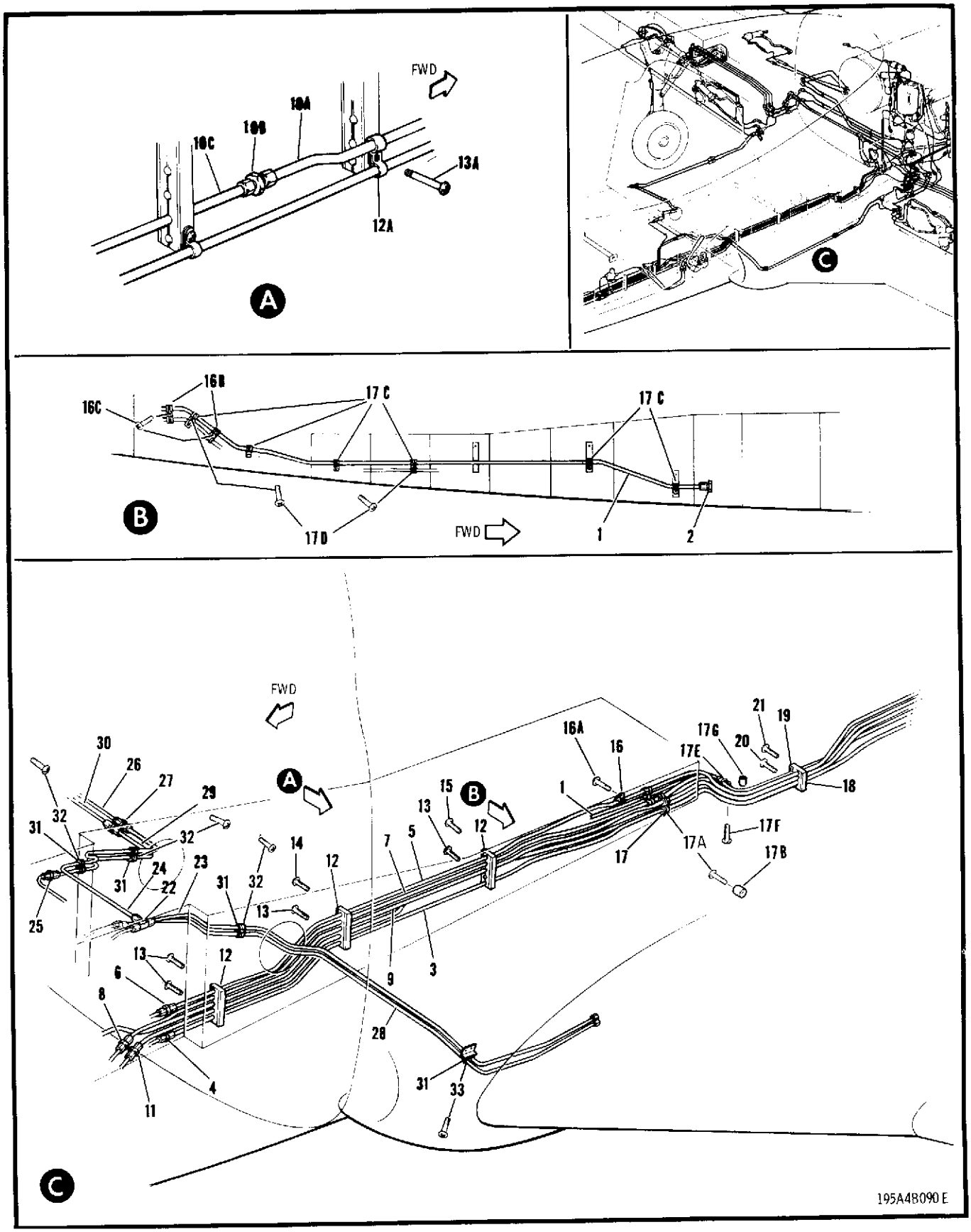

FIGURE 84 FUSELAGE STA 206-277 HYDRAULIC SYSTEM

	FIGURE AND INDEX NUMBER	GROUP	HYDRAULIC SYSTEM	EFFEC-TIVITY	UNITS PER ASSY
		MAJOR ASSEMBLY	FUSELAGE STA 206-277 HYDRAULIC SYSTEM		
		PART NUMBER	1 2 3 4 5 6 7 NOMENCLATURE		
	84 -	41A-42305	HYDRAULIC SYS INSTL - FUSELAGE STA 206-277 (SEE FIG. 80)		NP
	- 1	41A-42326-86	.LINE ASSY - PRESSURE		1
	- 2	MS21916D6-4	.REDUCER - (PRESSURE LINE)		1
	- 3	41A-42326-56	.LINE ASSY - RETURN		1
	- 4	MS21902D6	.UNION - (RETURN LINE)		1
	- 5	41A-42326-68	.LINE ASSY - NOSE LANDING GEAR UP		1
	- 6	MS21916D6-4	.REDUCER - (N/GR UP LINE)		1
	- 7	41A-42326-70	.LINE ASSY - NOSE LANDING GEAR DOWN		1
	- 8	MS21916D6-4	.REDUCER - (N/GR DOWN LINE)		1
	- 9	41A-42326-64	.LINE ASSY - HANDPUMP SUCTION		1
	-10		DELETED		
	-10A	41A-42326-88	.LINE ASSY - HANDPUMP PRESSURE		1
	-10B	MS21902D6	.UNION		1
	-10C	41A-42326-90	.LINE ASSY - HANDPUMP PRESSURE		1
	-11	MS21916D6-4	.REDUCER - (HANDPUMP PRESSURE)		1
	-12	41A-42318	.SUPPORT ASSY - LINE		3
	-12A	316-6-8	.CLIP		1
	-13	NAS623-3-20	.SCREW		3
	-13A	NAS623-3-22	.SCREW		1
	-14	NAS623-3-34	.SCREW		1
	-15	NAS623-3-23	.SCREW		1
R	-16	316-6-8	.CLIP - (V00502) (FUS STA 249)		1
	-16A	NAS623-3-2	.SCREW		1
	-16B	MS21919WDG5	.CLAMP		4
	-16C	NAS623-3-3	.SCREW		2
		AN960PD10L	.WASHER		2
		MS21042L3	.NUT		2
R	-17	316-6-8	.CLIP - (V00502) (FUS STA 255)		4
	-17A	NAS623-3-16	.SCREW		1
	-17B	NAS43DD3-40	.SPACER		1
R	-17C	316-6-8	.CLIP - (V00502)		8
	-17D	NAS623-3-3	.SCREW		2
		AN960PD10L	.WASHER		2
		MS21042L3	.NUT		2
R	-17E	316-6-8	.CLIP - (V00502)		2
	-17F	NAS623-3-16	.SCREW		1
	-17G	NAS43DD3-46	.SPACER		1
		AN960PD10L	.WASHER		1
		MS21042L3	.NUT		1
	-18	41A-42319	.SUPPORT ASSY - LINE		1
		41A-75405	.BRACKET ASSY - LINE SUPPORT		1
	-20	NAS623-3-32	.SCREW		1
		AN960PD10	.WASHER		1
		MS21042L3	.NUT		1
	-21	NAS623-3-30	.SCREW		1
	-22	MS21905D4	.TEE - (EMERGENCY LDG/GR DOWN)		1
	-23	41A-42326-38	.LINE ASSY - EMERGENCY LDG/GR DOWN		1
	-24	41A-42326-74	.LINE ASSY - EMERGENCY LDG/GR DOWN		1
	-25	MS21902D4	.UNION - (EMERGENCY LDG/GR DOWN)		1
	-26	41A-42326-78	.LINE ASSY - EMERGENCY LDG/GR DOWN		1
	-27	MS21902D4	.UNION - (FUS STA 208 & 209 BRAKE LINE)		2
	-28	41A-42326-44	.LINE ASSY - LH BRAKE		1
	-29	41A-42326-76	.LINE ASSY - RH BRAKE		1
		MS21902D4	.UNION - (RH BRAKE LINE)		1
	-30	41A-42326-80	.LINE ASSY - RH BRAKE		1
R	-31	316-4-8	.CLIP - (V00502) (BRAKE LINE RETAINING)		10
	-32	NAS623-3-3	.SCREW		3
	-33	NAS623-3-19	.SCREW		1
		AN960PD10L	.WASHER		1
	-33	MS21042L3	.NUT		1
			-OOO-		

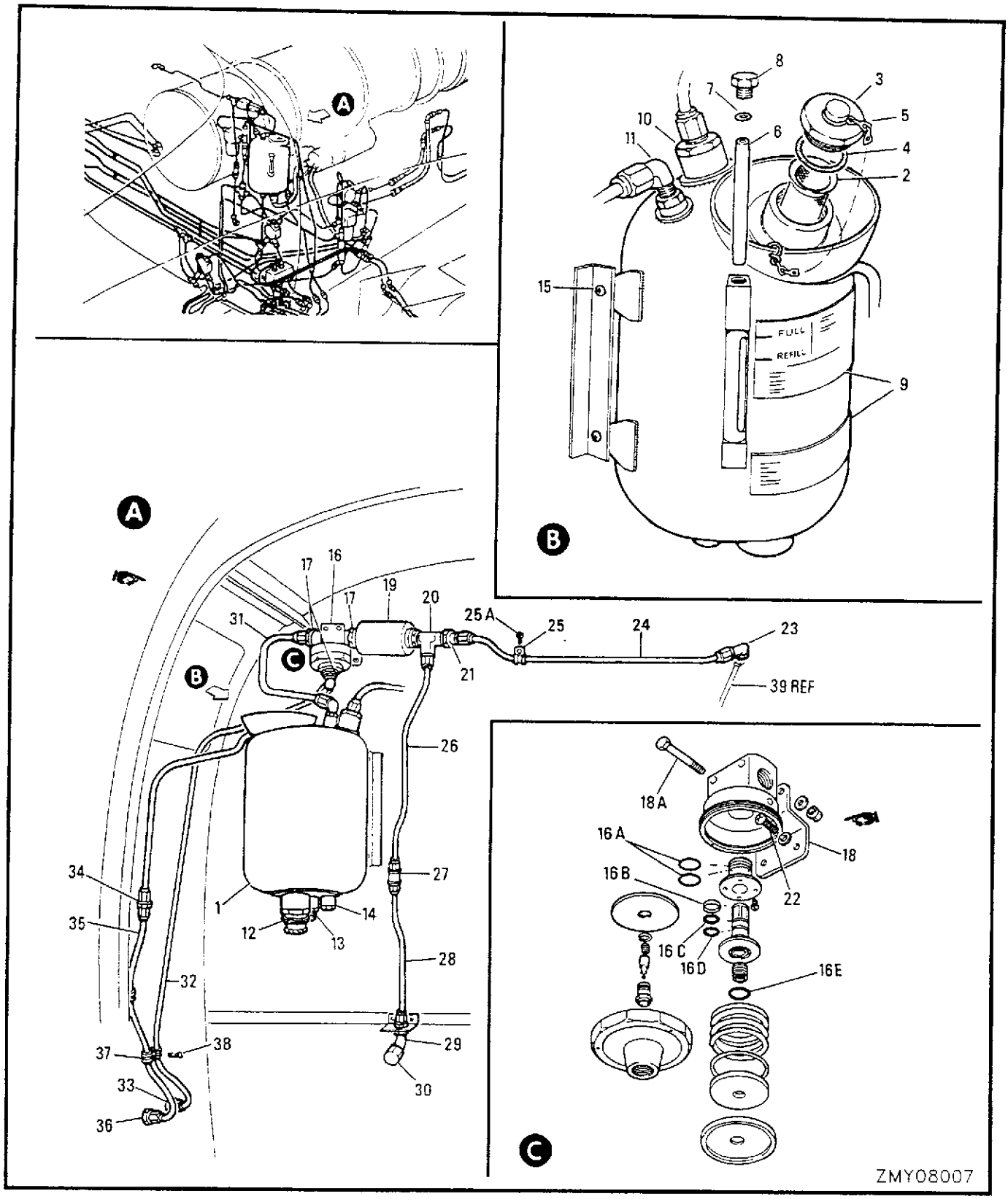

FIGURE 85 ENGINE COMPARTMENT HYDRAULIC SYSTEM

FIGURE AND INDEX NUMBER	GROUP	HYDRAULIC SYSTEM	EFFEC-TIVITY	UNITS PER ASSY
	MAJOR ASSEMBLY	ENGINE COMPARTMENT HYDRAULIC SYSTEM		
	PART NUMBER	1 2 3 4 5 6 7 NOMENCLATURE		
85 -	41A-42302	HYDRAULIC SYS INSTL - ENGINE COMPARTMENT (SEE FIG. 80)		NP
	41A-75124-800	.RESERVOIR GENL ASSY - MAIN HYDRAULIC		1
	41A-75023-800	..RESERVOIR ASSY - MAIN HYDRAULIC		1
- 1	41A-75023-4	...RESERVOIR ASSY - MAIN HYDRAULIC		1
- 2	41A-75403	...STRAINER ASSY - HYDRAULIC RESERVOIR		1
- 3	41A-75257-2	...CAP - HYDRAULIC RESERVOIR FILLER		1
- 4	MS28778-20	...PACKING		1
	41A-75404	...CHAIN ASSY - HYD RESERVOIR FILLER CAP		1
- 5	S1192-2-7	....CHAIN - (V88308)		1
	41A-75404-2	....RING - CHAIN		1
	41A-75404-4	....RING - CHAIN		1
- 6	41A-75258	...TUBE - HYD RESERVOIR SIGHT GAUGE		1
- 7	MS28775-110	...PACKING		2
- 8	41A-75023-6	...PLUG - (MADE FROM AN814-5D)		1
	MS28778-5	...PACKING		1
- 9	41A-75259	...NAMEPLATE - HYD RESERVOIR FILLING INSTRUCTION		1
	S1043M	...NAMEPLATE - (V88308)		1
-10	MS21916D8-6	..REDUCER - (RETURN)		1
	MS28778-8	..PACKING		1
-11	MS21908-4	..ELBOW		1
	AN6289D4	..NUT		1
	MS28778-4	..PACKING		1
	MS9058-04	..RING		1
-12	375211-16	..COUPLING ASSY - (V69705) (PUMP SUCTION)		1
	MS28778-16	..PACKING		1
-13	MS21902D6	..UNION - (HANDPUMP SUCTION)		1
	MS28778-6	..PACKING		1
-14	MS9015-04	..PLUG		1
	MS28778-4	..PACKING		1
-15	NAS623-3-66	.SCREW		2
	41A-75105-800	.REGULATOR & FILTER ASSY - AIR PRESSURE		1
-16	HR2002-1 *	..VALVE ASSY - (V73760) (AIR PRESS. REGULATOR) (FOR BKDN C-13-423-000/MX-000)		1
-16A	HS109-016 *	...PACKING - (V73760)		2
-16B	60115M *	...PACKING - (V73760)		1
-16C	63224A *	...PACKING - (V73760)		1
-16D	HS109-012 *	...PACKING - (V73760)		1
-16E	HS109-015 *	...PACKING - (V73760)		1
-17	MS21916D6-4 *	..REDUCER		3
R	MS28775-111 *	..PACKING		3
R	MS28775-110 *	..PACKING		1
-18	NO NUMBER *	..BRACKET		1
-18A	NAS1103-18 *	..BOLT		2
	AN960PD10 *	..WASHER		4
	MS21042L3 *	..NUT		2
-19	700040	..FILTER ASSY - AIR (V35076)		1
	800111	...ELEMENT - (V35076)		1
	50065-1	...SPRING - (V35076)		1
	10191	...GASKET - (V35076)		1
	MS28778-20	...PACKING		1
-20	MS21911-4	..TEE		1
	AN6289D4	..NUT		1
	MS28778-4	..PACKING		1
	MS9058-04	..RING		1
-21	277A4EE	..VALVE ASSY - (V91816) (CHECK)		1
	MS28778-4	..PACKING		1
-22	NAS623-3-3 *	.SCREW		2
	AN960PD10 *	.WASHER		2
	*	IAW C-12-114-000/CF-456		

	FIGURE AND INDEX NUMBER	GROUP	HYDRAULIC SYSTEM	EFFEC-TIVITY	UNITS PER ASSY
		MAJOR ASSEMBLY	ENGINE COMPARTMENT HYDRAULIC SYSTEM		
		PART NUMBER	1 2 3 4 5 6 7 NOMENCLATURE		
	85 -23	MS21908D4	.ELBOW - (FUS STA 277 RESERVOIR PRESSURIZATION)		1
		AN960PD716	.WASHER		1
		AN924-4	.NUT		1
	-24	41A-42333-4	.LINE ASSY - MAIN RESERVOIR PRESSURIZATION		1
R	-25	MS21919WH4	.CLAMP		1
	-25A	NAS623-3-2	.SCREW		1
		AN960PD10L	.WASHER		1
		MS21042L3	.NUT		1
	-26	41A-42333-12	.LINE ASSY - MAIN RESERVOIR PRESSURIZATION		1
	-27	1112-589976	.VALVE ASSY - (V92003) (CHECK)		1
	-28	41A-42333-14	.LINE ASSY - MAIN RESERVOIR PRESSURIZATION		1
	-29	MS21907D4	.ELBOW		1
		AN960PD716	.WASHER		1
		AN924-4	.NUT		1
	-30	MS21914-4	.CAP		1
	-31	NO NUMBER *	.LINE ASSY - MAIN RESERVOIR PRESSURIZATION		1
	-32	41A-42333-16	.LINE ASSY - RESERVOIR PRESSURIZATION VENT		1
	-33	MS21924D4	.UNION - (VENT)		1
		AN960PD716	.WASHER		1
		AN924-4	.NUT		1
	-34	MS21902D4	.UNION - (RESERVOIR OVERFLOW LINE)		1
	-35	41A-42333-58	.LINE ASSY - RESERVOIR OVERFLOW		1
	-36	MS21924D4	.UNION - (OVERFLOW LINE)		1
		AN960PD716	.WASHER		1
		AN924-4	.NUT		1
R	-37	MS21919WH4	.CLAMP		4
R	-38	MS35206-245	.SCREW		2
		AN960PD8L	.WASHER		2
		MS21042L08	.NUT		2
	-39	41A-95218-14	LINE ASSY - MAIN RESERVOIR PRESSURIZATION (SEE SECTION 9)		REF
			-OOO-		
		*	IAW C-12-114-000/CF-456		

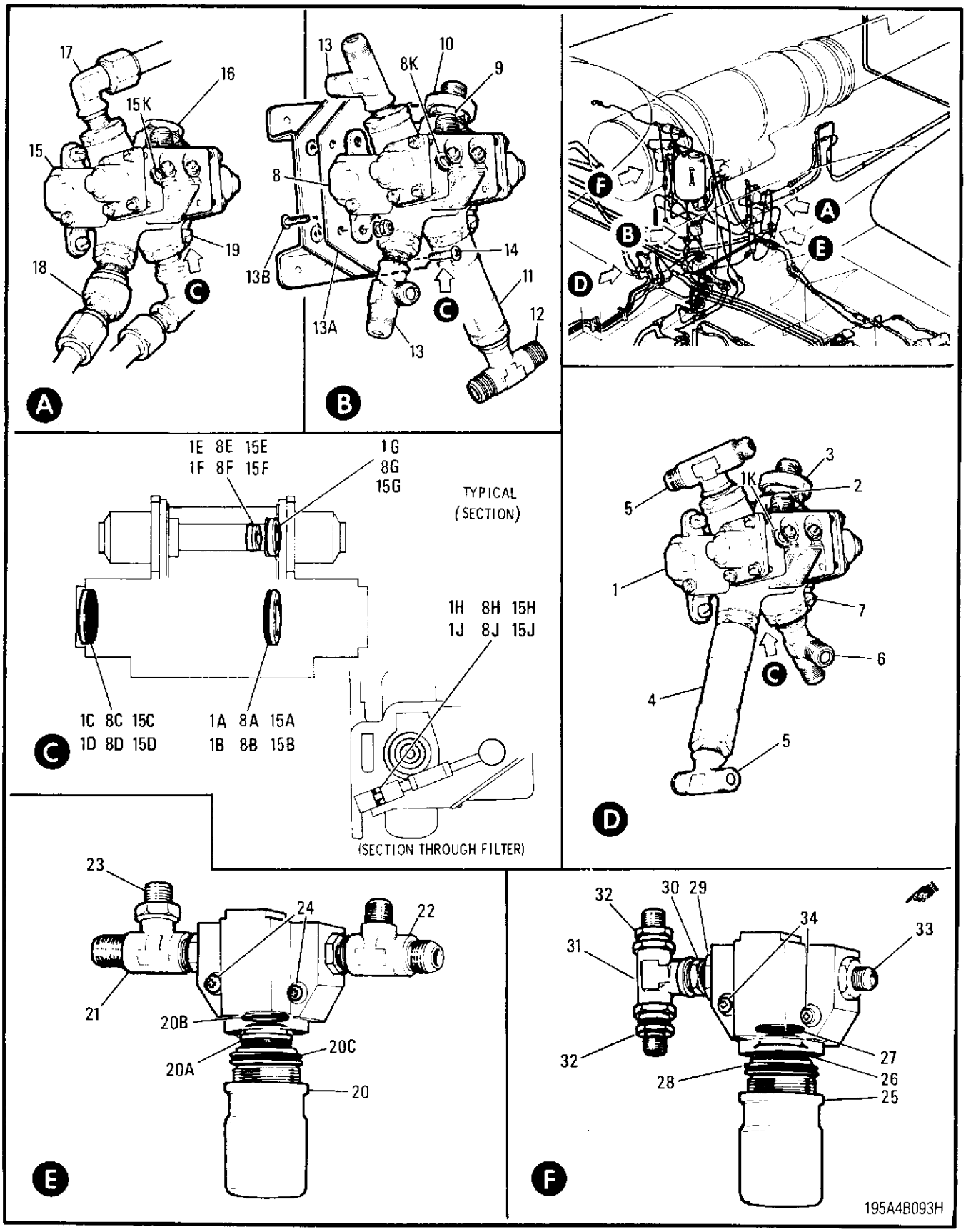

FIGURE 86 ENGINE COMPARTMENT HYDRAULIC VALVES & FILTERS

FIGURE AND INDEX NUMBER	GROUP	HYDRAULIC SYSTEM	EFFEC-TIVITY	UNITS PER ASSY
	MAJOR ASSEMBLY	ENGINE COMPARTMENT HYDRAULIC VALVES & FILTERS		
	PART NUMBER	1 2 3 4 5 6 7 NOMENCLATURE		
86 -	41A-42302	HYDRAULIC SYS INSTL - ENGINE COMPARTMENT (SEE FIG. 85)		REF
	41A-75102-6	.VALVE ASSY - LANDING GEAR SELECTOR		1
- 1	362-0377	..VALVE ASSY - (V36164) (SOLENOID OPERATED 4 WAY SELECTOR) (AS PER 41A-75005) (FOR BKDN SEE C-13-722-000/MS-000)		1
- 1A	MS28775-016	...PACKING		6
- 1B	MS28774-016	...RETAINER		6
- 1C	MS28775-114	...PACKING		2
- 1D	MS28774-114	...RETAINER		2
- 1E	MS28775-010	...PACKING		4
- 1F	MS28774-010	...RETAINER		4
- 1G	MS28775-014	...PACKING		2
- 1H	MS28775-008	...PACKING		1
- 1J	MS28774-007	...RETAINER		1
- 1K	MS28775-006	...PACKING		4
- 2	1112-589977	..VALVE ASSY - (V92003) (CHECK)		1
- 3	MS21902D6	..UNION		1
	MS28778-6	..PACKING		2
- 4	2R2065-3	..RESTRICTOR ASSY - (V26044)		1
- 5	MS21909D6	..TEE		2
- 6	MS21912D6	..TEE		1
	AN6289D6	..NUT		3
	MS28778-6	..PACKING		3
	MS9058-06	..RING		3
- 7	NAS623-3-7	.SCREW		4
	NAS43DD3-16	.SPACER		4
	AN960PD10L	.WASHER		4
	41A-75102-800	.VALVE ASSY - M/LDG/GR DOOR SELECTOR		1
- 8	362-0377	..VALVE ASSY - (V36164) (SOLENOID OPERATED 4 WAY SELECTOR) (AS PER 41A-75005) (FOR BKDN SEE C-13-722-000/MS-000)		1
- 8A	MS28775-016	...PACKING		6
- 8B	MS28774-016	...RETAINER		6
- 8C	MS28775-114	...PACKING		2
- 8D	MS28774-114	...RETAINER		2
- 8E	MS28775-010	...PACKING		4
- 8F	MS28774-010	...RETAINER		4
- 8G	MS28775-014	...PACKING		2
- 8H	MS28775-008	...PACKING		1
- 8J	MS28774-007	...RETAINER		1
- 8K	MS28775-006	...PACKING		4
- 9	1112-589977	..VALVE ASSY - (V92003) (CHECK)		1
-10	MS21902D6	..UNION		1
	MS28778-6	..PACKING		2
-11	2R2065-5	..RESTRICTOR ASSY - (V26044)		1
-12	MS21909D6	..TEE		1
-13	MS21912D6	..TEE		2
	AN6289D6	..NUT		3
	MS28778-6	..PACKING		3
	MS9058-06	..RING		3
-13A	41A-42339-10	..PLATE - BRACKET MOUNTING		1
-13B	NAS623-3-2	..SCREW		4
	AN960PD10L	..WASHER		4
	MS21042L3	..NUT		4
R -14	MS35207-262	.SCREW		2
	AN960PD10L	.WASHER		2
	41A-75102-2	.VALVE ASSY - SPEED BRAKE SELECTOR		1

	FIGURE AND INDEX NUMBER	GROUP	HYDRAULIC SYSTEM	EFFEC-TIVITY	UNITS PER ASSY
		MAJOR ASSEMBLY	ENGINE COMPARTMENT HYDRAULIC VALVES & FILTERS		
		PART NUMBER	1 2 3 4 5 6 7 NOMENCLATURE		
R	86 -15	362-0377	..VALVE ASSY - (V36164) (SOLENOID OPERATED 4 WAY SELECTOR) (AS PER 41A-75005) (FOR BKDN SEE C-13-722-000/MS-000)		1
	-15A	MS28775-016	...PACKING		6
	-15B	MS28774-016	...RETAINER		6
	-15C	MS28775-114	...PACKING		2
	-15D	MS28774-114	...RETAINER		2
	-15E	MS28775-010	...PACKING		4
	-15F	MS28774-010	...RETAINER		4
	-15G	MS28775-014	...PACKING		2
	-15H	MS28775-008	...PACKING		1
	-15J	MS28774-007	...RETAINER		1
	-15K	MS28775-006	...PACKING		4
R	-16	1112-589977	..VALVE ASSY - (V92003) (CHECK)		1
		MS28778-6	..PACKING		1
	-17	MS21908D6	..ELBOW		2
R	-18	ER837-0608	..ELBOW - (V96313)		1
		AN6289D4	..NUT		1
		MS28778-6	..PACKING		1
		MS9058-06	..RING		1
	-19	NAS623-3-2	.SCREW		4
		AN960PD10L	.WASHER		4
		41A-75107-800	.FILTER ASSY - MAIN PRESSURE		1
R	-20	702000	..FILTER ASSY - (V35076) (HYDRAULIC OIL) (AS PER 41A-75022) (FOR BKDN SEE C-13-724-000/MS-000)		1
R	-20A	701004	...ELEMENT ASSY - (V35076)		1
	-20B	MS28775-116	...PACKING		1
	-20C	MS28775-224	...PACKING		1
		MS28774-224	...RETAINER		1
	-21	MS21910D8	..TEE		1
R	-22	ER804-080606	..TEE - (V96313)		1
		AN6289D8	..NUT		2
		MS28778-8	..PACKING		2
		MS9058-08	..RING		2
	-23	MS21902-8	..UNION		1
		MS28778-8	..PACKING		1
	-24	NAS623-3-31	.SCREW		2
		NAS43DD3-37	.SPACER		2
		AN960PD10	.WASHER		6
R	-25	702000	.FILTER ASSY - (V35076) (HYD		1
R	-26	701004	.ELEMENT ASSY - (V35076)		1
	-27	MS28775-116	.PACKING		1
	-28	MS28775-224	.PACKING		1
		MS28774-224	.RETAINER		1
	-29	AN893-12D	.BUSHING		1
		MS28778-8	.PACKING		1
	-30	MS21924D6	.UNION		1
		AN6289D6	.NUT		1
		MS28778-6	.PACKING		2
		MS9058-06	.RING		1
	-31	AN938D6	.TEE		1
R	-32	112-589977	.VALVE ASSY - (V92003) (CHECK)		2
		MS28778-6	.PACKING		2
	-33	MS21916D8-6	.REDUCER		1
		MS28778-8	.PACKING		1
	-34	NAS623-3-31	.SCREW		2
		NAS43-3-37	.SPACER		2
		AN960PD10	.WASHER		6

-000-

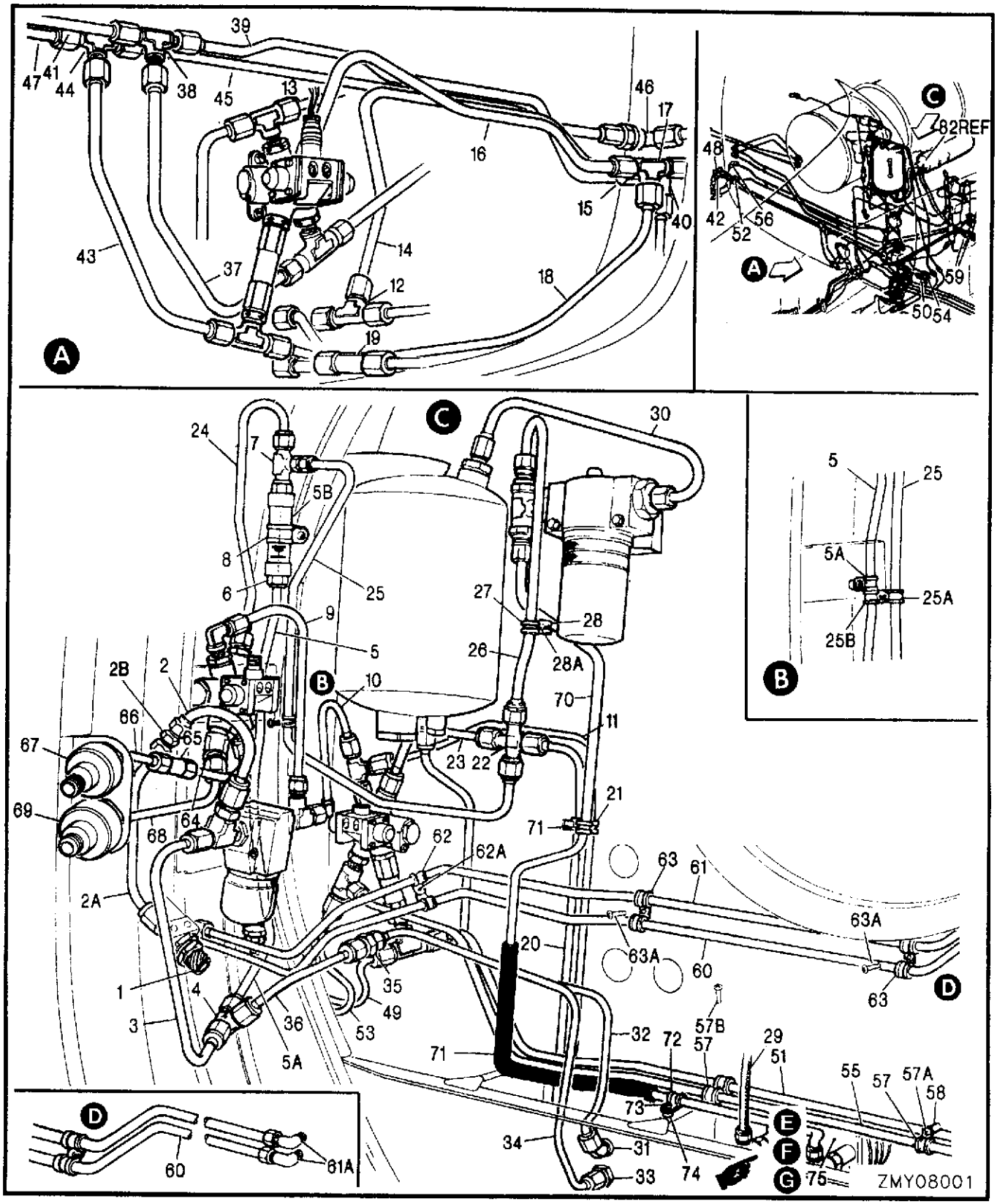

FIGURE 87 (SHEET 1) ENGINE COMPARTMENT HYDRAULIC SYSTEM

	FIGURE AND INDEX NUMBER	GROUP	HYDRAULIC SYSTEM	EFFEC-TIVITY	UNITS PER ASSY
		MAJOR ASSEMBLY	ENGINE COMPARTMENT HYDRAULIC SYSTEM		
		PART NUMBER	1 2 3 4 5 6 7 NOMENCLATURE		
	87 -	41A-42302	HYDRAULIC SYS INSTL - ENGINE COMPARTMENT (SEE FIG. 85)		REF
	- 1	3302-8	.COUPLING ASSY - (V69705)		1
		AN960PD1216	.WASHER		1
		AN924-8	.NUT		1
	- 2	41A-42333-950	.LINE ASSY - PRESSURE		1
	- 2A	41A-42333-952	.LINE ASSY - PRESSURE		1
	- 2B	1112-589978R	.VALVE ASSY - (V92003) (CHECK)		1
	- 3	41A-42333-74	.LINE ASSY - PRESSURE		1
	- 4	MS21905-8	.TEE		1
	- 5	41A-42333-328	.LINE ASSY - PRESSURE		1
R	- 5A	MS21919WH8	.CLAMP		1
		NAS623-3-12	.SCREW		1
		NAS43DD3-40	.SPACER		1
		AN960PD10	.WASHER		1
		MS21042L3	.NUT		1
		41A-75106	.VALVE ASSY - MAIN SYS PRESSURE RELIEF		1
	- 5B	HP457100-1900	..VALVE ASSY - (V84685) (PRESSURE RELEASE) (IAW 41A-75016) FOR BRKDN SEE C-13-683-000/MS-000		1
		MS28775-008 *	...PACKING		1
		MS28775-112 *	...PACKING		1
		MS28774-112 *	...RETAINER		2
		MS28775-111 *	...PACKING		1
		MS28774-111 *	...RETAINER		1
	- 6	MS21902J8	..UNION		1
		MS28778-8	..PACKING		1
	- 7	ER804-08-06-06	..TEE - (V96313)		1
		AN6289D8	..NUT		1
		MS28778-8	..PACKING		1
		MS9058-08	..RING		1
R	- 8	MS21919WH16	.CLAMP		1
		NAS623-3-2	.SCREW		1
		MS21042L3	.NUT		1
	- 9	41A-42333-62	.LINE ASSY - PRESSURE		1
	-10	41A-42333-56	.LINE ASSY - PRESSURE		1
	-11	41A-42333-100	.LINE ASSY - PRESSURE		1
	-12	MS21912D6	.TEE - (PRESSURE)		1
		AN960PD916	.WASHER		1
		AN924-6	.NUT		1
	-13	41A-42333-82	.LINE ASSY - PRESSURE		1
	-14	41A-42333-302	.LINE ASSY - PRESSURE		1
	-15	MS21924D6	.UNION - (PRESSURE)		1
		AN960PD916	.WASHER		1
		AN924-6	.NUT		1
	-16	41A-42333-92	.LINE ASSY - RETURN		1
	-17	MS21912D6	.TEE - (RETURN)		1
		AN960PD916	.WASHER		1
		AN924-6	.NUT		1
	-18	41A-42333-94	.LINE ASSY - RETURN		1
	-19	MS21912D6	.TEE - (RETURN)		1
		AN960PD916	.WASHER		1
		AN924-6	.NUT		1
	-20	41A-42333-32	.LINE ASSY - RETURN		1
R	-21	MS21919WH6	.CLAMP		2
		NAS623-3-12	.SCREW		1
		NAS43DD3-35	.SPACER		1
	-22	MS21906D6	.CROSS - (RETURN)		1
	-23	41A-42333-30	.LINE ASSY - RETURN		1
	-24	41A-42333-326	.LINE ASSY - RETURN		1
	-25	41A-42333-324	.LINE ASSY - RETURN		1
R	-25A	MS21919WH6	.CLAMP		1
		*	SUPPLIED AS PARTS OF HP457100-1900 VALVE		

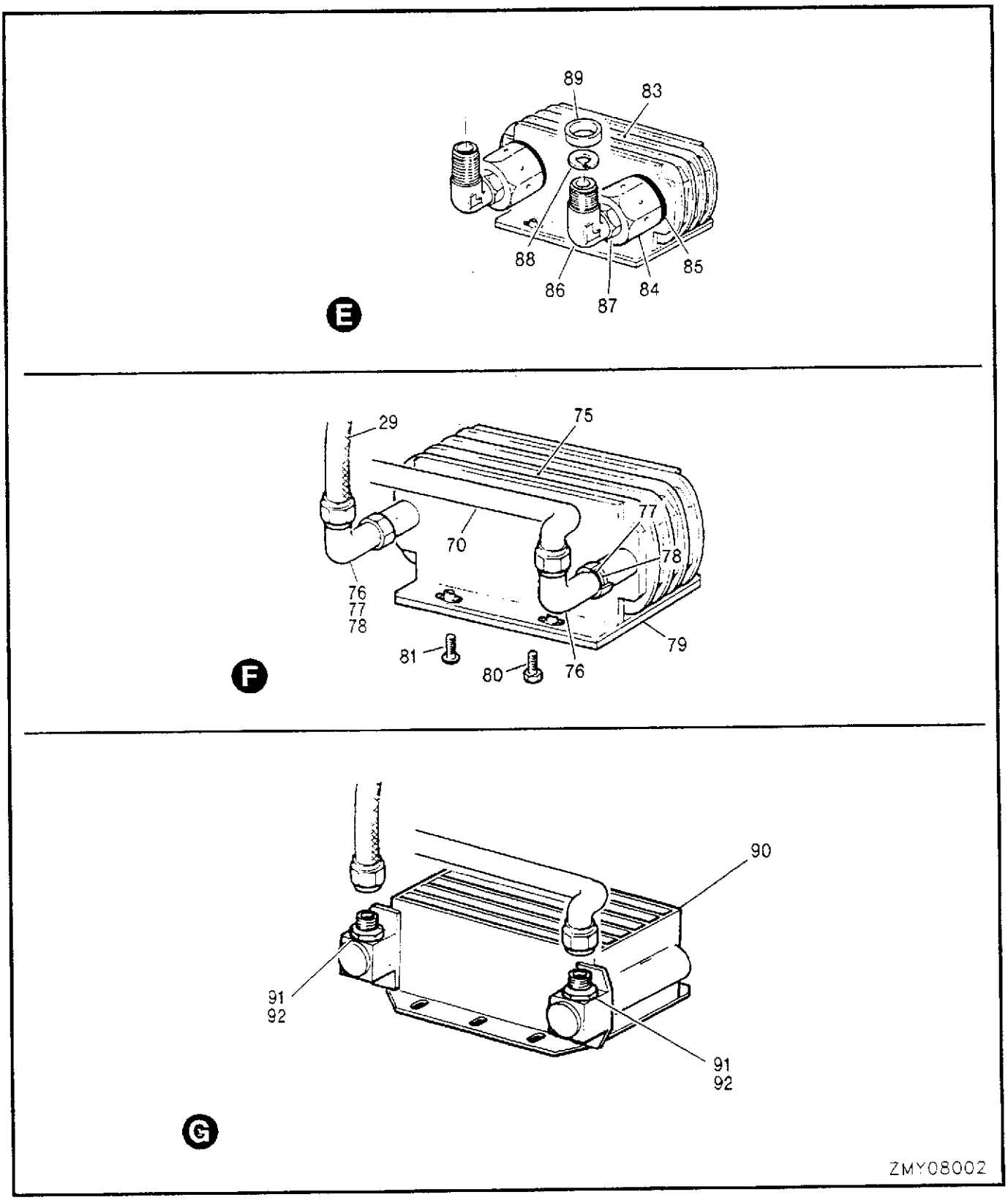

FIGURE 87 (SHEET 2) ENGINE COMPARTMENT HYDRAULIC SYSTEM

	FIGURE AND INDEX NUMBER	GROUP	HYDRAULIC SYSTEM	EFFEC-TIVITY	UNITS PER ASSY
		MAJOR ASSEMBLY	SPEEDBRAKE ACTUATOR & HYDRAULIC LINES		
		PART NUMBER	1 2 3 4 5 6 7 NOMENCLATURE		
R	87 -25B	MS21919WH8	.CLAMP		1
		NAS623-3-3	.SCREW		1
		AN960PD10	.WASHER		1
		MS21042L3	.NUT		1
	-26	41A-42333-20	.LINE ASSY - RETURN		1
R	-27	MS21919WH6	.CLAMP		1
R	-28	MS21919WH4	.CLAMP		1
R	-28A	MS35206-245	.SCREW		1
		AN960PD8L	.WASHER		1
		MS21042L08	.NUT		1
	-29	AE1002256G0233	.HOSE ASSY - (ENGINE PUMP BY-PASS)		1
	-30	41A-42333-18	.LINE ASSY - RETURN (IAW C-12-114-000/CF-436)		1
	-31	MS21907D6	.ELBOW - (HANDPUMP SUCTION)		1
		AN960PD916	.WASHER		1
		AN924-6	.NUT		1
	-32	41A-42333-44	.LINE ASSY - HANDPUMP SUCTION		1
	-33	MS21924-6	.UNION - (HANDPUMP PRESSURE)		1
		AN960PD916	.WASHER		1
		AN924-6	.NUT		1
	-34	41A-42333-98	.LINE ASSY - HANDPUMP PRESSURE		1
	-35	MS21916-8-6	.REDUCER		1
	-36	41A-42333-76	.LINE ASSY - HANDPUMP PRESSURE		1
	-37	41A-42333-84	.LINE ASSY - MAIN LANDING GEAR UP		1
	-38	MS21905D6	.TEE - (LDG/GR UP)		1
	-39	41A-42333-86	.LINE ASSY - M/LDG/GR UP TO PORT WING		1
	-40	MS21908-6	.ELBOW - (LDG/GR UP PORT)		1
		AN960PD916	.WASHER		1
		AN924-6	.NUT		1
	-41	41A-42333-50	.LINE ASSY - M/LDG/GR UP TO STBD WING		1
	-42	MS21907-6	.ELBOW - (LDG/GR UP STBD)		1
		AN960PD916	.WASHER		1
		AN924-6	.NUT		1
	-43	41A-42333-88	.LINE ASSY - MAIN LANDING GEAR DOWN		1
	-44	MS21905D6	.TEE - (LDG/GR DOWN)		1
	-45	41A-42333-90	.LINE ASSY - M/LDG/GR DOW N TO PORT WING		1
	-46	MS21908-6	.ELBOW - (LDG/GR DOWN PORT)		1
		AN960PD916	.WASHER		1
		AN924-6	.NUT		1
	-47	41A-42333-52	.LINE ASSY - M/LDG/GR DOWN TO STBD WING		1
	-48	MS21908-6	.ELBOW - (LDG/GR DOWN STBD)		1
		AN960PD916	.WASHER		1
		AN924-6	.NUT		1
	-49	41A-42333-38	.LINE ASSY - M/LDG/GR DOOR UP TO PORT WING		1
	-50	MS21908-6	.ELBOW - (LDG/GR DOOR UP PORT)		1
	-50	AN960PD916	.WASHER		1
		AN924-6	.NUT		1
	-51	41A-42333-40	.LINE ASSY - M/LDG/GR DOOR UP TO STBD WING		1
	-52	MS21908-6	.ELBOW - (LDG/GR DOOR UP STBD)		1
		AN960PD916	.WASHER		1
		AN924-6	.NUT		1
	-53	41A-42333-34	.LINE ASSY - (MLG DOOR DOWN TO PORT WING)		1
	-54	MS21908-6	.ELBOW - (LDG/GR DOOR DOWN PORT)		1
		AN960PD916	.WASHER		1
		AN924-6	.NUT		1

	FIGURE AND INDEX NUMBER	GROUP	HYDRAULIC SYSTEM	EFFEC-TIVITY	UNITS PER ASSY
		MAJOR ASSEMBLY	SPEEDBRAKE ACTUATOR & HYDRAULIC LINES		
		PART NUMBER	1 2 3 4 5 6 7 NOMENCLATURE		
	87 -55	41A-42333-36	.LINE ASSY - (MLG DOOR DOWN TO STBD WING)		1
	-56	MS21907-6	.ELBOW - (LDG/GR DOOR DOWN STBD)		1
		AN960PD916	.WASHER		1
		AN924-6	.NUT		1
R	-57	MS21919WH6	.CLAMP		4
	-57A	NAS623-3-2	.SCREW		1
		AN960PD10L	.WASHER		1
	-57B	NAS623-2-2	.SCREW		1
		AN960PD8L	.WASHER		1
	-58	NAS43-3-32	.SPACER		1
	-59	MS21912D6	.TEE - (FLAP UP & DOWN LINE PORT)		2
		AN960PD916	.WASHER		2
		AN924-6	.NUT		2
	-60	41A-42333-48	.LINE ASSY - FLAP UP TO STBD WING		1
	-61	41A-42333-46	.LINE ASSY - FLAP DOWN TO STBD WING		1
	-61A	MS21908-6	.ELBOW - (FLAP UP & DOWN LINE STBD)		2
		AN960PD916	.WASHER		2
		AN924-6	.NUT		2
R	-62	MS21919WH6	.CLAMP		2
R	-62A	MS35206-245	.SCREW		1
		AN960PD8L	.WASHER		1
		MS21042L08	.NUT		1
R	-63	MS21919WH6	.CLAMP		4
	-63A	NAS623-3-16	.SCREW		2
		AN960PD10L	.WASHER		2
		NAS43DD3-48	.SPACER		2
	-64	41A-42333-64	.LINE ASSY - SPEED BRAKE OPEN		1
	-65	462W4098	.RESTRICTOR - (V92003)		1
	-66	41A-42333-66	.LINE ASSY - SPEED BRAKE OPEN		1
	-67	3300-6	.COUPLING ASSY - (V69705)		1
		AN960PD916	.WASHER		1
		AN924-6	.NUT		1
	-68	41A-42333-72	.LINE ASSY - SPEED BRAKE CLOSE		1
	-69	3300-8	.COUPLING ASSY - (V69705)		1
		AN960PD1216	.WASHER		1
		AN924-8	.NUT		1
	-70	41A-42333-22	.LINE ASSY - HEAT EXCHANGER		1
	-71	NO NUMBER	.CASING - PROTECTIVE (IAW C-12-114-000/CF-331)		1
R	-72	MS21919WH6	.CLAMP		2
	-73	NAS623-3-12	.SCREW		1
	-74	NAS43DD3-35	.SPACER		1
R		41A-75129 **	.COOLER ASSY - HYDRAULIC OIL (FOR SPARES ORDER 41A-75129-802)		1
	-75	8406F	..COOLER ASSY - (SWC) (OIL)		1
	-76	ER833D0806	..REDUCER - (V96313)		2
	-77	MS9058-08	..RING		2
	-78	S1422-8	..PACKING - (V88308)		2
		AN6289D8	..NUT		2
	-79	41A-75272	.GASKET - HEAT EXCHANGER		1
	-80	AN3-6	.BOLT		2
	-81	NAS623-3-6	.SCREW		2
	-82	41A-42332	PUMP ASSY - ENGINE DRIVEN HYDRAULIC (SEE SECTION 5)		REF

	FIGURE AND INDEX NUMBER	GROUP	HYDRAULIC SYSTEM	EFFEC-TIVITY	UNITS PER ASSY
		MAJOR ASSEMBLY	SPEEDBRAKE ACTUATOR & HYDRAULIC LINES		
		PART NUMBER	1 2 3 4 5 6 7 NOMENCLATURE		
R	87 -	41A-75129-800 **	COOLER ASSY - HYDRAULIC OIL (FOR SPARES ORDER 41A-75129-802)		1
	-83	8406L	.COOLER - (SWC) (OIL)		1
	-84	AN893-13D	.REDUCER		2
	-85	MS28778-12	.PACKING		2
	-86	MS21926D6	.ELBOW		2
	-87	AN6289D6	.NUT		2
	-88	MS9058-06	.RING		2
	-89	MS28778-6	.PACKING		2
R		41A-75129-802	COOLER ASSY - HYDRAULIC OIL (SPARE FOR 41A-75129 & 41A-75129-800) (SEE DND DWG 8625168)		1
R	-90	41A-75129-16	.COOLER (MADE FROM 8406S (SWC))		1
R	-91	MS21902-6	.UNION		2
R	-92	MS28778-6	.PACKING		2

-OOO-

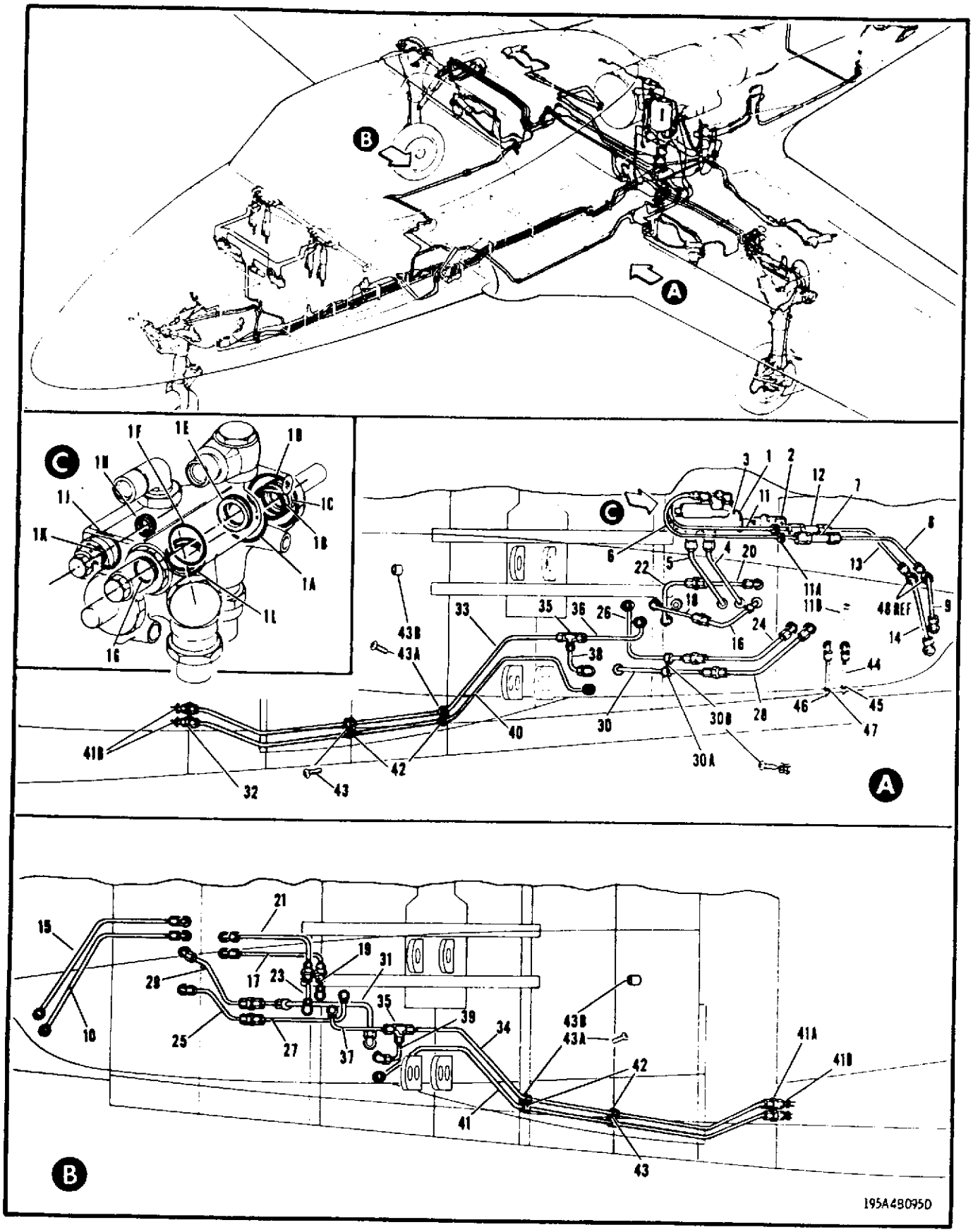

FIGURE 88 WING FILLET HYDRAULIC SYSTEM

FIGURE AND INDEX NUMBER	GROUP	HYDRAULIC SYSTEM	EFFEC-TIVITY	UNITS PER ASSY
	MAJOR ASSEMBLY	WING FILLET HYDRAULIC SYSTEM		
	PART NUMBER	1 2 3 4 5 6 7 NOMENCLATURE		
88 -	41A-90851	FOLLOW UP SYSTEM MECHANISM INSTL - FLAP (SEE SECTION 7)		REF
	41A-75103	.VALVE ASSY - FLAP SELECT		1
		OR		
R - 1	3293000-1	..VALVE ASSY - (V35962) (METERING) (IAW 41A-75021) (FOR BKDN SEE C-13-503-000/MS-000)		1
- 1A	MS28775-017	...PACKING		4
- 1B	MS28775-111	...PACKING		2
	MS28774-111	...RETAINER		2
- 1C	3293019-1	...WIPER - (V35962) (FELT)		2
- 1D	MS28775-118	...PACKING		2
- 1E	MS28775-111	...PACKING		1
	MS28774-111	...RETAINER		1
- 1F	MS28775-018	...PACKING		1
- 1G	MS28775-011	...PACKING		1
- 1H	MS28775-010	...PACKING		1
	MS28774-010	...RETAINER		1
- 1J	MS28775-015	...PACKING		3
- 1K	MS28775-009	...PACKING		1
- 1M	MS28775-014	...PACKING		5
	MS28774-014	...RETAINER		1
- 2	41A-90864	..FORK END - FLAP FOLLOW UP VALVE		1
	NAS509-6	..NUT		1
- 3	NAS623-3-34	.SCREW		3
	NAS43DD3-24	.SPACER		3
	AN960PD10	.WASHER		3
	41A-42323	HYDRAULIC SYS INSTL - WING FILLET (SEE FIG. 80)		NP
- 4	41A-42324-76	.LINE ASSY - FLAP SEL VALVE PRESS. (PORT)		1
- 5	41A-42324-74	.LINE ASSY-FLAP SELECTOR VALVE RETURN(PORT)		1
- 6	41A-42324-84	.LINE ASSY - FLAP UP SELECTOR VALVE TO UNION (PORT)		1
- 7	2R2065-12	.RESTRICTOR - (V26044)(PORT)		1
	MS21902D6	.UNION - (PORT)		2
	S1422-6	.PACKING - (V88308) (PORT)		2
- 8	41A-42324-70	.LINE ASSY - UNION TO TEE FLAP UP (PORT)		1
- 9	41A-42324-2	.LINE ASSY - FLAP UP (PORT)		1
-10	41A-42324-32	.LINE ASSY - FLAP UP (STBD)		1
-11	41A-42324-78	.LINE ASSY - SELECTOR VALVE TO RESTRICTOR FLAP DOWN (PORT)		1
-11A	MS21919WDG6	.CLAMP		2
-11B	MS35207-265	.SCREW		1
	AN960PD10L	.WASHER		1
	MS21042L3	.NUT		1
-12	2R2065-14	.RESTRICTOR - (V26044) (PORT)		1
	MS21902D6	.UNION - (PORT)		2
	S1422-6	.PACKING - (V88308) (PORT)		2
-13	41A-42324-80	.LINE ASSY - RESTRICTOR TO TEE FLAP DOWN (PORT)		1
-14	41A-42324-4	.LINE ASSY - FLAP DOWN (PORT)		1
-15	41A-42324-34	.LINE ASSY - FLAP DOWN (STBD)		1
-16	41A-42324-6	.LINE ASSY - MAIN LANDING GEAR UP (PORT)		1
-17	41A-42324-38	.LINE ASSY - MAIN LANDING GEAR UP (STBD)		1
	MS21916D6-4	.REDUCER - (LDG/GR UP)		2
-18	41A-42324-66	.LINE ASSY - MAIN LANDING GEAR UP (PORT)		1
-19	41A-42324-42	.LINE ASSY - MAIN LANDING GEAR UP (STBD)		1
-20	41A-42324-8	.LINE ASSY - MAIN LANDING GEAR DOWN (PORT)		1
-21	41A-42324-36	.LINE ASSY - MAIN LANDING GEAR DOWN (STBD)		1
	MS21916D6-4	.REDUCER - (LDG/GR DOWN)		2
-22	41A-42324-64	.LINE ASSY - MAIN LANDING GEAR DOWN (PORT)		1
-23	41A-42324-40	.LINE ASSY - MAIN LANDING GEAR DOWN (STBD)		1
-24	41A-42324-18	.LINE ASSY - LANDING GEAR DOOR UP (PORT)		1
-25	41A-42324-54	.LINE ASSY - LANDING GEAR DOOR UP (STBD)		1

	FIGURE AND INDEX NUMBER	GROUP	HYDRAULIC SYSTEM	EFFEC-TIVITY	UNITS PER ASSY
		MAJOR ASSEMBLY	WING FILLET HYDRAULIC SYSTEM		
		PART NUMBER	1 2 3 4 5 6 7 NOMENCLATURE		
	88 -	MS21916D6-4	.REDUCER - (LDG/GR DOOR UP)		2
	-26	41A-42324-22	.LINE ASSY - LANDING GEAR DOOR UP (PORT)		1
	-27	41A-42324-58	.LINE ASSY - LANDING GEAR DOOR UP (STBD)		1
	-28	41A-42324-16	.LINE ASSY - LANDING GEAR DOOR DOWN (PORT)		1
	-29	41A-42324-52	.LINE ASSY - LANDING GEAR DOOR DOWN (STBD)		1
	-29	MS21916D6-4	.REDUCER - (LDG/GR DOOR DOWN)		2
	-30	41A-42324-20	.LINE ASSY - LANDING GEAR DOOR DOWN (PORT)		1
R	-30A	MS21919WDG4	.CLAMP		2
R	-30B	MS35206-245	.SCREW		1
		AN960PD8L	.WASHER		1
		MS21042L08	.NUT		1
	-31	41A-42324-56	.LINE ASSY - LANDING GEAR DOOR DOWN (STBD)		1
	-32	MS21902D4	.UNION - (LDG/GR EMERGENCY DOWN)		2
	-33	41A-42324-88	.LINE ASSY - LDG/GR EMERG ENCY DOWN (PORT)		1
	-34	41A-42324-62	.LINE ASSY - LDG/GR EMERGENCY DOWN (STBD)		1
	-35	MS21905D4	.TEE		2
	-36	41A-42324-10	.LINE ASSY - LDG/GR EMERGENCY DOWN (PORT)		1
	-37	41A-42324-60	.LINE ASSY - LDG/GR EMERGENCY DOWN (STBD)		1
	-38	41A-42324-26	.LINE ASSY - LDG/GR DOOR EMERGENCY DOWN (PORT)		1
	-39	41A-42324-46	.LINE ASSY - LDG/GR DOOR EMERGENCY DOWN (STBD)		1
	-40	41A-42324-86	.LINE ASSY - BRAKE (PORT)		1
	-41	41A-42324-44	.LINE ASSY - BRAKE (STBD)		1
	-41A	MS21902D4	.UNION - (BRAKE LINE)		2
	-41B	MS35489-8	.GROMMET - (FUSELAGE STA 229)		4
R	-42	MS21919WDG4	.CLAMP - (FUSELAGE STA 240 & 250)		8
R	-43	MS35206-245	.SCREW - (FUSELAGE STA 240)		2
		AN960PD8L	.WASHER		2
		MS21042L08	.NUT		2
R	-43A	MS35206-247	.SCREW - (FUSELAGE STA 250)		2
	-43B	NAS43DD3-32	.SPACER		2
		AN960PD8L	.WASHER		2
	-44	41A-42324-12	.LINE ASSY - RESERVOIR AIR VENT		1
	-45	MS35489-6	.GROMMET		1
	-46	41A-42324-14	.LINE ASSY - RESERVOIR OVERFLOW		1
	-47	MS35489-11	.GROMMET		1
	-48	MS21912D6	TEE - (FLAP UP & DOWN LINE PORT) (SEE FIG. 87)		REF

-OOO-

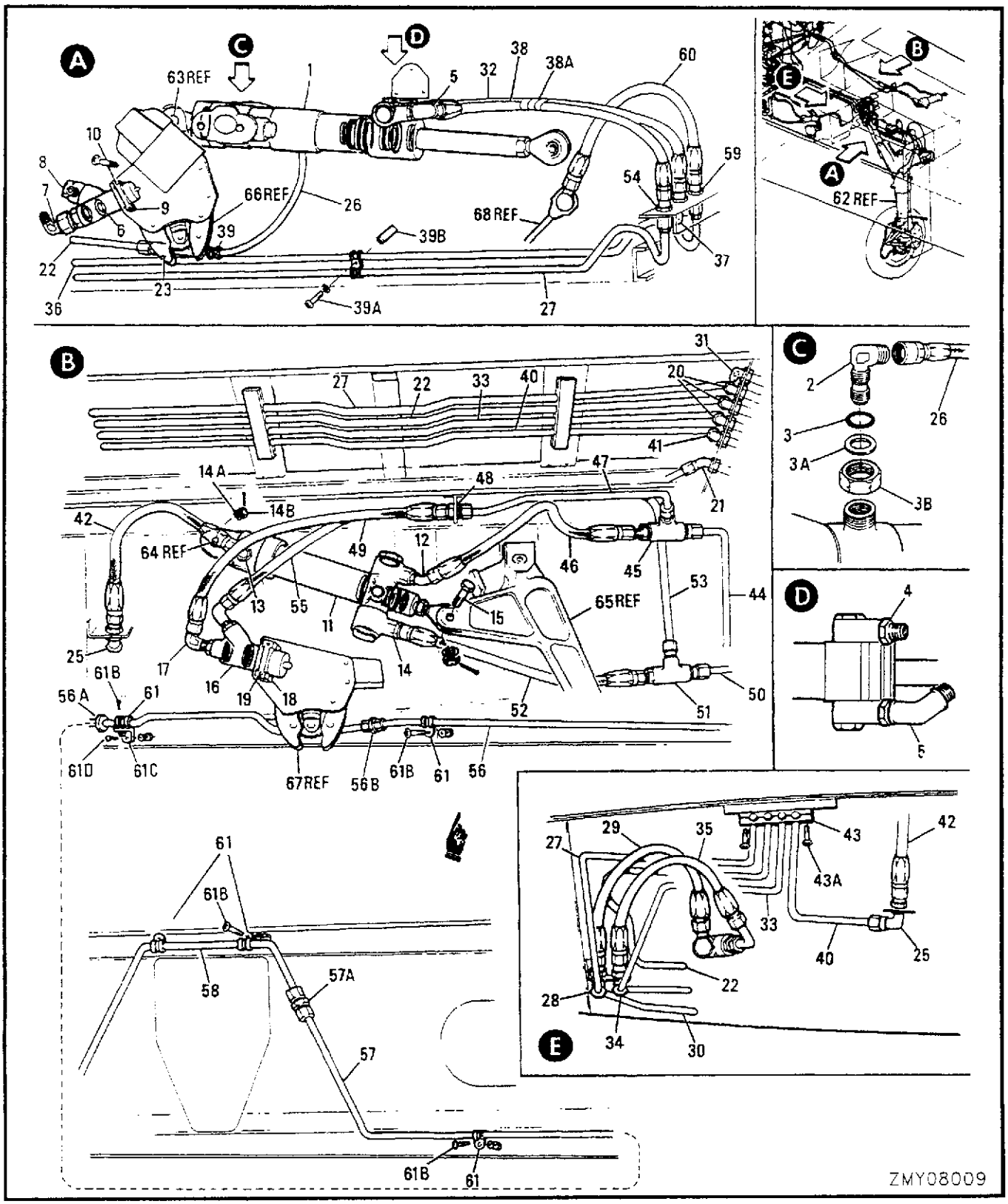

FIGURE 89 MAIN LANDING GEAR & DOOR HYDRAULIC SYSTEM

FIGURE AND INDEX NUMBER	GROUP / MAJOR ASSEMBLY / PART NUMBER		HYDRAULIC SYSTEM / MAIN LANDING GEAR & DOOR HYDRAULIC SYSTEM / 1 2 3 4 5 6 7 NOMENCLATURE	EFFEC-TIVITY	UNITS PER ASSY
R 89 -	41A-42301		HYDRAULIC SYS INSTL - MAIN LANDING GEAR & DOOR PORT (SEE SECTION 1)		NP
	41A-42301-1		HYDRAULIC SYS INSTL - MAIN LANDING GEAR & DOOR STBD		NP
	41A-75117-800	*	.ACTUATOR ASSY - MAIN GEAR PORT (FOR SPARES ORDER 41A-75117-806)		1
	41A-75117-806		.ACTUATOR ASSY - MAIN GEAR PORT (SPARE FOR 41A-75117-800)		
	41A-75117-801	*	.ACTUATOR ASSY - MAIN GEAR STBD (FOR SPARES ORDER 41A-75117-807)		1
	41A-75117-807		.ACTUATOR ASSY - MAIN GEAR STBD (SPARE FOR 41A-75117-801)		
- 1	3290000-9		..ACTUATOR ASSY - (V35962) (MAIN GEAR PORT) (IAW 41A-75002-806) (MOD) (FOR BKDN SEE C-13-499-000/MS-000)		1
	3290000-10		..ACTUATOR ASSY - (V35962) (MAIN GEAR STBD) (IAW 41A-75002-807) (MOD) (FOR BKDN SEE C-13-499-000/MS-000)		1
- 2	MS21926-4	**	..ELBOW		1
- 3	MS28778-04	**	..O-RING		1
- 3A	MS9058-04	**	..RING		1
- 3B	AN6289D4	**	..NUT		1
- 4	MS21902-4		..UNION		1
	MS28778-4		..PACKING - (V88308)		1
- 5	MS21907-4		..ELBOW		1
	AN6289D4		..NUT		1
	S1422-4		..PACKING - (V88308)		1
	MS28773-04		..RING		1
	AN960-716		.WASHER		1
	AN320-7		.NUT - (ACTUATOR TO STRUT RETAINING)		1
	MS24665-304		.COTTER PIN		1
	41A-75116-18		.ACTUATOR ASSY - M/LDG/GR UPLOCK PORT (FOR SPARES ORDER 41A-75116-32)		
	41A-75116-32		.ACTUATOR ASSY - M/LDG/GR UPLOCK PORT (SPARE FOR 41A-751116-18)		
	41A-75116-19		.ACTUATOR ASSY - M/LDG/GR UPLOCK STBD (FOR SPARES ORDER 41A-75116-33)		1
	41A-75116-33		.ACTUATOR ASSY - M/LDG/GR UPLOCK STBD (SPARE FOR 41A-75116-19)		
- 6	C100994-1		..ACTUATOR ASSY - (V36123) (M/LDG/GR UPLOCK) (IAW 41A-75014-800) (MOD) (FOR BKDN SEE C-13-730-000/MS-000)		1
- 7	ER776-4		..ELBOW - (V96313)		1
	S1313-4		..BOLT - (V88308)		1
	620-042-4		..BANJ-O-SEAL - (V45681) (PLAIN)		1
	620-042-4		..BANJ-O-SEAL - (V45681) (KNURLED)		1
- 8	MS21908-4		..ELBOW		1
	AN6289D4		..NUT		1
	S1422-4		..PACKING - (V88308)		1
	MS9058-04		..RING		1
- 9	41A-42309-2		.BLOCK - UPLOCK ACTUATOR (M/LDG/GR)		2
-10	NAS623-3-21		.SCREW		2
	AN960PD10L		.WASHER		2
	MS21042L3		.NUT		2
	41A-75119	*	.ACTUATOR ASSY - M/LDG/GR DOOR PORT (FOR SPARES ORDER 41A-75119-800)		1
	41A-75119-800		.ACTUATOR ASSY - M/LDG/GR DOOR PORT (SPARE FOR 41A-75119)		
	41A-75119-1	*	.ACTUATOR ASSY - M/LDG/GR DOOR STBD (FOR SPARES ORDER 41A-75119-801)		1
		*	IAW C-12-114-000/CF-282		
		**	IAW C-12-114-000/CF-396		

	FIGURE AND INDEX NUMBER	GROUP: HYDRAULIC SYSTEM MAJOR ASSEMBLY: MAIN LANDING GEAR & DOOR HYDRAULIC SYSTEM PART NUMBER	1 2 3 4 5 6 7 NOMENCLATURE	EFFEC-TIVITY	UNITS PER ASSY
	89 -	41A-75119-801	.ACTUATOR ASSY - M/LDG/GR DOOR STBD (SPARE FOR 41A-75119-1)		
R	-11	3289000-4	..ACTUATOR ASSY - (V35962) (M/LDG/GR DOOR PORT (IAW 41A-75020-800) (MOD) (FOR BKDN SEE C-13-502-000/MS-000)		1
R		3289000-5	..ACTUATOR ASSY - (V35962) (M/LDG/GR DOOR STBD (IAW 41A-75020-801) (MOD) (FOR BKDN SEE C-13-502-000/MS-000)		1
	-12	MS21907-4	..ELBOW		1
	-13	MS21908-4	..ELBOW		1
		AN6289D4	..NUT		2
R		S1422-4	..PACKING - (V88308)		2
		MS9058-04	..RING		2
	-14	MS21902-4	..UNION		1
R		S1422-4	..PACKING - (V88308)		1
	-14A	AN970-5	.WASHER		1
	-14B	AN320-5	.NUT - (ACTUATOR RETAINING)		1
		MS24665-155	.COTTER PIN		1
	-15	NAS1107-17D	.BOLT		1
		AN960-716	.WASHER	001-031	1
		AN960-716	.WASHER	032-	2
		AN320-7	.NUT	001-031	1
		AN320-7	.NUT	032-	2
		MS24665-304	.COTTER PIN		1
		41A-75116-16	.ACTUATOR ASSY - M/LDG/GR DOOR UPLOCK PORT (FOR SPARES ORDER 41A-75116-30)		1
		41A-75116-30	.ACTUATOR ASSY - M/LDG/GR DOOR UPLOCK PORT (SPARE FOR 41A-75116-16)		
		41A-75116-17	.ACTUATOR ASSY - M/LDG/GR DOOR UPLOCK STBD (FOR SPARES ORDER 41A-75116-31)		1
		41A-75116-31	.ACTUATOR ASSY - M/LDG/GR DOOR UPLOCK STBD (SPARE FOR 41A-75116-17)		
R	-16	100994-1	..ACTUATOR ASSY - (V36123) (M/LDG/GR DOOR UPLOCK) (IAW 41A-75014-800) (FOR BKDN SEE C-13-730-000/MS-000) OR		1
		6900-1	..ACTUATOR ASSY - (36164)		
	-17	MS21908-4	..ELBOW		2
		AN6289D4	..NUT		2
R		S1422-4	..PACKING - (V88308)		2
		MS9058-04	..RING		2
	-18	41A-42309-2	.BLOCK - UPLOCK ACTUATOR (DOOR)		2
	-19	NAS623-3-21	.SCREW		2
		AN960PD10L	.WASHER		2
		MS21042L3	.NUT		2
		41A-42301-82	.LINE INSTL - PORT WING HYDRAULIC		NP
		41A-42301-83	.LINE INSTL - STBD WING HYDRAULIC		NP
	-20	MS21908D4	..ELBOW - (WING ROOT RIB)		3
	-21	MS21907D4	..ELBOW - (WING ROOT RIB)		1
		AN960PD716	..WASHER		7
		AN924-4D	..NUT		7
	-22	41A-42325-14	..LINE ASSY - MAIN LANDING GEAR UP (PORT)		1
		41A-42325-16	..LINE ASSY - MAIN LANDING GEAR UP (STBD)		1
R	-23	462W4096	..RESTRICTOR - (V92003)		1
	-24		DELETED		
	-25		DELETED		
R	-26	AE6665018E0180	..HOSE ASSY - (V69705) (LDG/GR TO ACTUATOR)		1
	-27	41A-42325-2	..LINE ASSY - MAIN LANDING GEAR DOWN (PORT)		1
		41A-42325-4	..LINE ASSY - MAIN LANDING GEAR DOWN (STBD)		1
	-28	MS21909-4	..TEE - (LDG/GR DOWN)		1
		AN960PD716	..WASHER		1
		AN924-4D	..NUT		1

FIGURE AND INDEX NUMBER	GROUP	HYDRAULIC SYSTEM	EFFEC-TIVITY	UNITS PER ASSY
	MAJOR ASSEMBLY	MAIN LANDING GEAR & DOOR HYDRAULIC SYSTEM		
	PART NUMBER	1 2 3 4 5 6 7 NOMENCLATURE		
R 89 -29	AE1002256E0084	..HOSE ASSY - (V69705) (LDG/GR DOWN TO UPLOCK)		1
-30	41A-42325-6	..LINE ASSY - MAIN LANDING GEAR DOWN (PORT)		1
	41A-42325-8	..LINE ASSY - MAIN LANDING GEAR DOWN (STBD)		1
-31	MS21908D4	..ELBOW - (M/LDG/GR DOWN)		2
	AN960PD716	..WASHER		1
	AN924-4D	..NUT		1
-32	AE1002256E0135	..HOSE ASSY - (V69705) (M/LDG/GR EMERGENCY DOWN TO ACTUATOR)		1
-33	41A-42325-22	..LINE ASSY - MAIN LANDING GEAR EMERGENCY DOWN (PORT)		1
	41A-42325-24	..LINE ASSY - MAIN LANDING GEAR EMERGENCY DOWN (STBD)		1
-34	MS21909-4	..TEE - (M/LDG/GR EMERGENCY DOWN)		1
	AN960PD716	..WASHER		1
	AN924-4D	..NUT		1
-35	AE1002256E0086	..HOSE ASSY - (V69705) (M/LDG/GR EMERGENCY DOWN TO UPLOCK)		1
-36	41A-42327-8	..LINE ASSY - MAIN LANDING GEAR EMERGENCY DOWN (PORT)		1
	41A-42327-26	..LINE ASSY - MAIN LANDING GEAR EMERGENCY DOWN (STBD)		1
-37	MS21908-4	..ELBOW - (M/LDG/GR EMERGENCY DOWN)		1
	AN960PD716	..WASHER		1
	AN924-4D	..NUT		1
-38	AE1002256E0135	..HOSE ASSY - (V69705) MAIN LANDING GEAR		1
-38A	41A-42301-92	..TAPE - PRESSURE SENSITIVE		AR
-39	MS21919WDG8 *	..CLAMP - (WING STA 74)		2
	AN742D4 *	..CLAMP - (WING STA 74)		1
-39A	NAS623-3-10	..SCREW		1
-39B	NAS43DD3-16	..SPACER		1
	AN936B10	..LOCK WASHER		1
-40	41A-42325-30	..LINE ASSY - M/LDG/GR DOOR UP (PORT)		1
	41A-42325-32	..LINE ASSY - M/LDG/GR DOOR UP (STBD)		1
-41	MS21908D4	..ELBOW - (M/LDG/GR DOOR UP)		1
	AN960PD716	..WASHER		1
	AN924-4D	..NUT		1
-42	AE1002256E0076	..HOSE ASSY - (M/LDG/GR DOOR UP TO ACTUATOR)		1
-43	41-75440-2	..CLAMP - LINE SUPPORT		2
-43A	NAS623-3-9	..SCREW		4
-44	41A-42325-34	..LINE ASSY - M/LDG/GR DOOR DOWN (PORT)		1
	41A-42325-36	..LINE ASSY - M/LDG/GR DOOR DOWN (STBD)		1
-45	MS21912-4	..TEE - (M/LDG/GR DOOR DOWN)		1
	AN960PD716	..WASHER		1
	AN924-4D	..NUT		1
-46	AE1002415E0104	..HOSE ASSY - (M/LDG/GR DOOR DOWN TO ACTUATOR)		1
-47	41A-42325-38	..LINE ASSY - M/LDG/GR DOOR DOWN (PORT)		1
	41A-42325-40	..LINE ASSY - M/LDG/GR DOOR DOWN (STBD)		1
-48	MS21924-4	..UNION - (M/LDG/GR DOWN)		2
	AN960PD716	..WASHER		2
	AN924-4D	..NUT		2
-49	AE1002256E0164	..HOSE ASSY - (M/LDG/GR DOOR DOWN TO ACTUATOR)		1
-50	41A-42325-42	..LINE ASSY - M/LDG/GR DOOR EMERGENCY DOWN (PORT)		1
	41A-42325-44	..LINE ASSY - M/LDG/GR DOOR EMERGENCY DOWN (STBD)		1
-51	MS21912-4	..TEE - (M/LDG/GR EMERGENCY DOWN)		1
	AN960PD716	..WASHER		1
	*	IAW C-12-114-000/CF-396		

FIGURE AND INDEX NUMBER	GROUP	HYDRAULIC SYSTEM	EFFEC-TIVITY	UNITS PER ASSY
	MAJOR ASSEMBLY	MAIN LANDING GEAR & DOOR HYDRAULIC SYSTEM		
	PART NUMBER	1 2 3 4 5 6 7 NOMENCLATURE		
88 -	AN924-4D	..NUT		1
-52	AE1002256E0114 *	..HOSE ASSY - (MAIN LANDING GEAR DOOR EMERGENCY DOWN TO ACTUATOR)		1
-53	41A-42325-46	..LINE ASSY - M/LDG/GR DOOR EMERGENCY DOWN (PORT)		1
	41A-42325-48	..LINE ASSY - M/LDG/GR DOOR EMERGENCY DOWN (STBD)		1
-54	MS21924-4	..UNION - (M/LDG/GR EMERGENCY DOWN)		1
	AN960PD716	..WASHER		1
	AN924-4D	..NUT		1
-55	AE1002256E0134 *	..HOSE ASSY - (MAIN LANDING GEAR DOOR EMERGENCY DOWN TO UPLOCK)		1
-56	41A-42325-50	..LINE ASSY - BRAKE (PORT)		1
	41A-42325-52	..LINE ASSY - BRAKE (STBD)		1
-56A	MS35489-6	..GROMMET		1
-56B	MS21902D4	..UNION - (BRAKE)		1
-57	41A-42325-74	..LINE ASSY - BRAKE (PORT)		1
	41A-42325-76	..LINE ASSY - BRAKE (STBD)		1
-57A	MS21902D4	..UNION - (BRAKE)		1
-58	41A-42325-54	..LINE ASSY - BRAKE (PORT)		1
	41A-42325-56	..LINE ASSY - BRAKE (STBD)		1
-59	MS21924-4	..UNION - (BRAKE)		1
	AN960PD716	..WASHER		1
	AN924-4D	..NUT		1
R -60	AE6665018E0102	..HOSE ASSY - (V69705) (BRAKE TO SWIVEL JOINT)		1
-61	AN742D4	..CLAMP		5
-61A		DELETED		
-61B	NAS623-3-2	..SCREW		5
	AN960PD10L	..WASHER		5
	MS21042L3	..NUT		5
	41A-10008	PANEL ASSY - SKIN LOWER PORT(SEE SECTION 1)		REF
	41A-10008-1	PANEL ASSY - SKIN LOWER STBD		REF
-61C	41-75474-2	.ANGLE - BRAKE LINE SUPPORT (26076 & SUBS RIVETTED)		1
-61D	NAS623-3-3	.SCREW	001-075	1
	AN960PD10L	.WASHER	001-075	1
	MS21042L3	.NUT	001-075	1
-62	41A-87503	STRUT ASSY - MAIN GEAR SHOCK(SEE SECTION 4)		REF
-63	41A-85018	BOLT - MAIN GEAR (ACTUATOR RETAINING) (SEE SECTION 4)		REF
-64	41A-87523	SPIGOT - MAIN GEAR DOOR (ACTUATOR PIVOT) (SEE SECTION 1)		REF
-65	41A-87552-10	LEVER ASSY - MAIN GEAR DOOR (SEE SECTION 4)		REF
-66	41A-87508-804	UPLOCK ASSY - MAIN GEAR (SEE SECTION 4)		REF
-67	41A-87520-804	UPLOCK ASSY - MAIN GEAR DOOR(SEE SECTION 4)		REF
-68	3297000-1	SWIVEL ASSY - (MAIN GEAR BRAKE LINE JOINT) (SEE SECTION 4)		REF
		-OOO-		
	*	IAW C-12-114-000/CF-414		

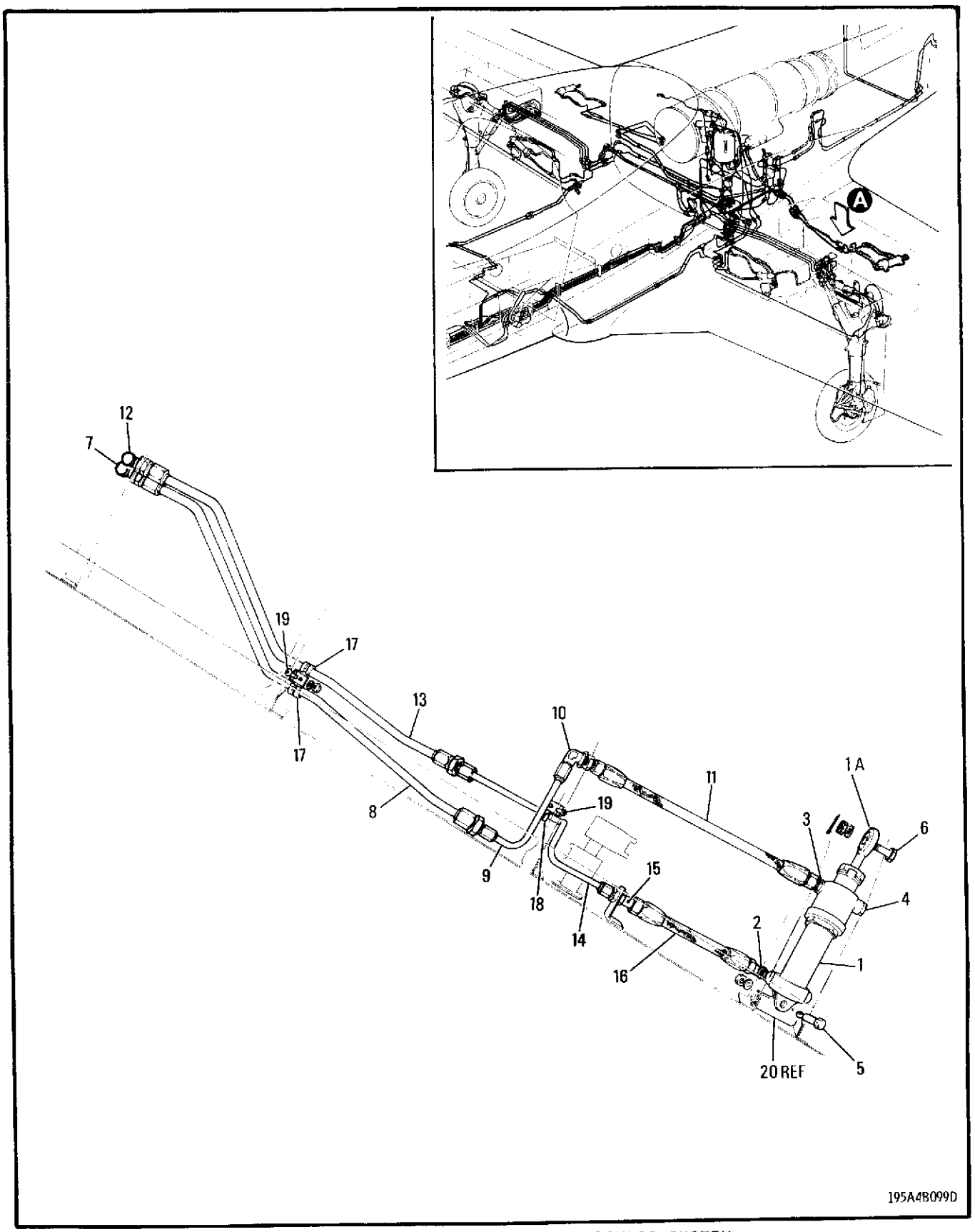

FIGURE 90 FLAP ACTUATOR HYDRAULIC SYSTEM

FIGURE AND INDEX NUMBER	GROUP	HYDRAULIC SYSTEM	EFFEC-TIVITY	UNITS PER ASSY
	MAJOR ASSEMBLY	FLAP ACTUATOR HYDRAULIC SYSTEM		
	PART NUMBER	1 2 3 4 5 6 7 NOMENCLATURE		
90 -	41A-42307	HYDRAULIC SYS INSTL - FLAP ACTUATOR PORT (SEE SECTION 1)		NP
	41A-42307-1	HYDRAULIC SYS INSTL - FLAP ACTUATOR STBD		NP
	41A-75120	.ACTUATOR ASSY - FLAP PORT		1
	41A-75120-1	.ACTUATOR ASSY - FLAP STBD		1
- 1	6350-1	..ACTUATOR ASSY - (V02121) (FLAP) (IAW 41A-75015) (FOR BKDN SEE C-13-885-000/MS-000)		1
- 1A	ADNE6JW	...BEARING - (SEE C-13-885-000/MS-000)		1
- 2	MS21908-4	..ELBOW		1
	AN6289D4	..NUT		1
	MS28778-4	..PACKING		1
	MS9058-04	..RING		1
- 3	MS21902-4	..UNION		1
- 4	AN814-4D	..PLUG		2
	MS28778-4	..PACKING		3
- 5	41A-42328	.BOLT - FLAP ACTUATOR SPECIAL		1
	AN960C416L	.WASHER		1
	AN320-4	.NUT		1
R - 6	NAS6206-28D	.BOLT - (ACTUATOR RETAINING)		1
R	AN960C616	.WASHER		1
	AN320-6	.NUT		1
	MS24665-283	.COTTER PIN		1
- 7	MS21908D6	.ELBOW - (WING STA 32 FLAP UP LINE)		1
	AN960PD916	.WASHER		1
	AN924-6D	.NUT		1
- 8	41A-42325-62	.LINE ASSY - FLAP UP (PORT)		1
	41A-42325-70	.LINE ASSY - FLAP UP (STBD)		1
	MS21916D6-4	.REDUCER - (FLAP UP)		1
- 9	41A-42325-60	.LINE ASSY - FLAP UP (PORT)		1
	41A-42325-68	.LINE ASSY - FLAP UP (STBD)		1
-10	MS21908-4	.ELBOW - (FLAP UP)		1
	AN960PD716	.WASHER		1
	AN924-4D	.NUT		1
-11	AE1002256E0120	.HOSE ASSY - (V69705) (FLAP UP)		1
-12	MS21908D6	.ELBOW - (WING STA 32 FLAP DOWN LINE)		1
	AN960PD916	.WASHER		1
	AN924-6D	.NUT		1
-13	41A-42325-64	.LINE ASSY - FLAP DOWN (PORT)		1
	41A-42325-72	.LINE ASSY - FLAP DOWN (STBD)		1
	MS21916D6-4	.REDUCER		1
-14	41A-42325-58	.LINE ASSY - FLAP DOWN (PORT)		1
	41A-42325-66	.LINE ASSY - FLAP DOWN (STBD)		1
-15	MS21924-4	.UNION - (FLAP DOWN)		1
	AN960PD716	.WASHER		1
	AN924-4D	.NUT		1
-16	AE1002256E0073	.HOSE ASSY - (V69705) (FLAP DOWN)		1
-17	316-6-8	.CLIP - (V00502)		2
-18	316-4-8	.CLIP - (V00502)		1
-19	MS35207-265	.SCREW		2
	AN960C10L	.WASHER		2
	MS21042L3	.NUT		2
-20	41A-10071	TRUNNION - FLAP ACTUATOR (SEE SECTION 1)		REF

-OOO-

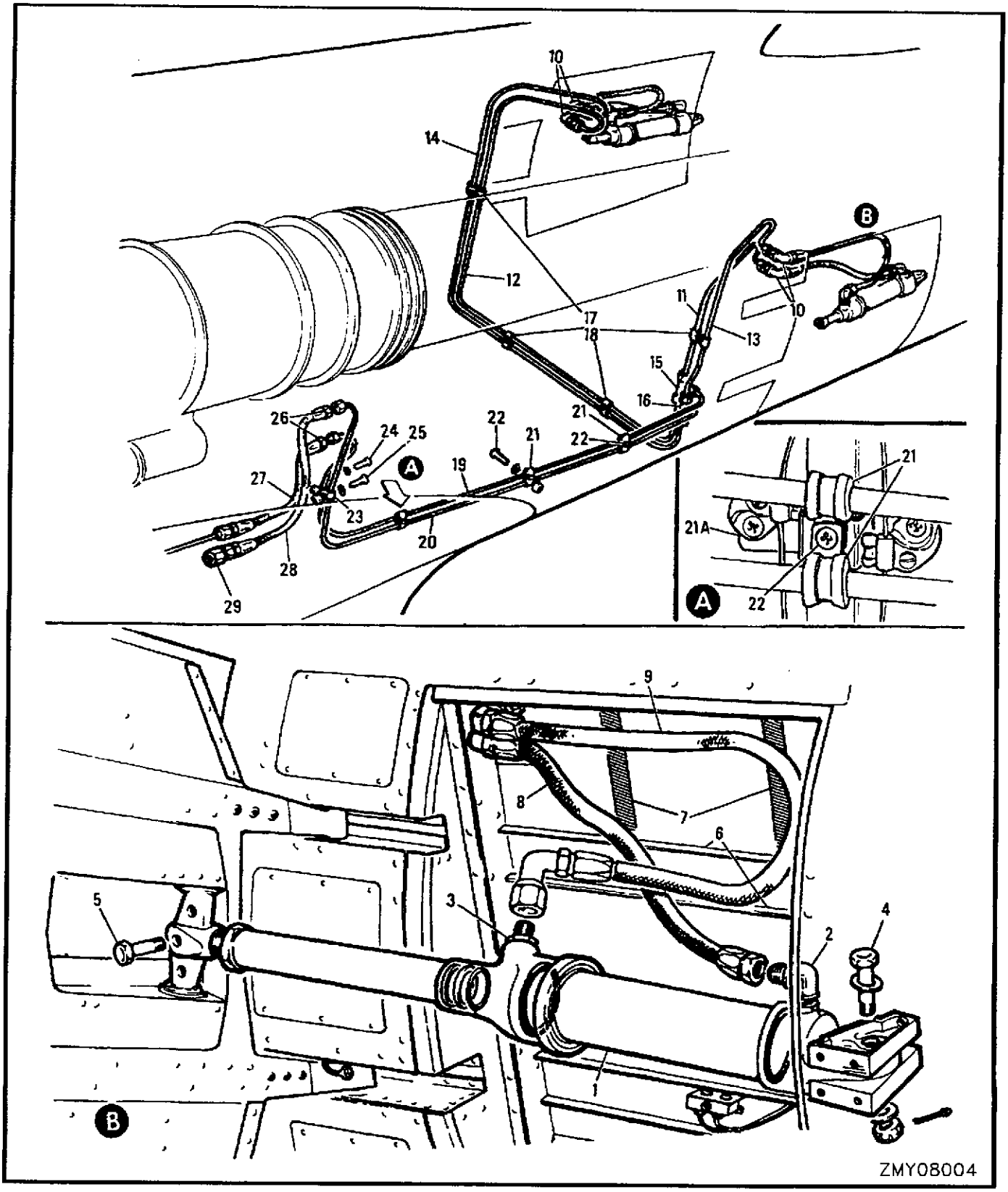

FIGURE 91 SPEEDBRAKE ACTUATOR & HYDRAULIC LINES

	FIGURE AND INDEX NUMBER	GROUP / MAJOR ASSEMBLY / PART NUMBER		HYDRAULIC SYSTEM / SPEEDBRAKE ACTUATOR & HYDRAULIC LINES / 1 2 3 4 5 6 7 NOMENCLATURE	EFFEC-TIVITY	UNITS PER ASSY
	91 -	41A-42306		HYDRAULIC SYS INSTL - REAR FUSELAGE (SEE SECTION 3)		NP
		41A-75113-800		.ACTUATOR ASSY - SPEEDBRAKE PORT		1
		41A-75113-501		.ACTUATOR ASSY - SPEEDBRAKE STBD		1
R	- 1	24-10002		..ACTUATOR ASSY - (V36164)(SPEEDBRAKE INTERNAL LOCK TYPE PORT) (IAW 41A-75019-800) (FOR BKDN SEE C-13-721-000/MS-000)		1
R		24-10003		..ACTUATOR ASSY - (V36164)(SPEEDBRAKE INTERNAL LOCK TYPE STBD) (IAW 41A-75019-801) (FOR BKDN SEE C-13-721-000/MS-000)		1
	- 2	MS21926-6D		..ELBOW		1
		AN6289D6		..NUT		1
		MS28778-6		..PACKING		2
		MS9058-06		..RING		1
R	- 3	462W4097		..RESTRICTOR - (V92003)		1
		MS28778-6		..PACKING		1
	- 4	NAS6208-18D		.BOLT		2
	- 5	NAS6208-11D		.BOLT		2
		AN960PD816		.WASHER		4
		AN320-8		.NUT		4
		MS24665-285		.COTTER PIN		4
R	- 6	S4905-020		.EXTRUSION - (V88308)		4
	- 7	41A-42306-58		.TAPE - TEMPERATURE RESISTING		4
	- 8	41A-42306-46		.HOSE ASSY - SPEEDBRAKE OPEN		2
		AE1002256G0172		..HOSE ASSY		1
		41A-42306-50		..COVER - PROTECTIVE		1
	- 9	AE1002406G0224		.HOSE ASSY		2
	-10	MS21908-6		.ELBOW - (SPEEDBRAKE OPEN)		4
		AN960PD916		.WASHER		4
		AN924-6		.NUT		4
	-11	41A-42327-44	*	.LINE ASSY - SPEEDBRAKE OPEN		1
	-12	41A-42327-46	*	.LINE ASSY - SPEEDBRAKE OPEN		1
	-13	41A-42327-50	*	.LINE ASSY - SPEEDBRAKE CLOSE		1
	-14	41A-42327-52	*	.LINE ASSY - SPEEDBRAKE CLOSE		1
		AN960PD916		.WASHER		4
	-15	MS21905-6		.TEE - (SPEEDBRAKE OPEN)		1
	-16	MS21905-6		.TEE - (SPEEDBRAKE CLOSE)		1
R	-17	755-6-2-8-T		.CLIP - (V00502)		8
	-18	NAS623-3-3		.SCREW		4
		AN960PD10L		.WASHER		4
		MS21042L3		.NUT		4
	-19	41A-42327-42	*	.LINE ASSY - SPEEDBRAKE OPEN		1
	-20	41A-42327-48	*	.LINE ASSY - SPEEDBRAKE CLOSE		1
R	-21	755-6-2-8HT		.CLIP - (V00502)		6
	-21A	NO NUMBER		.BRACKET - OVERHEAT DETECTION WIRES STDF (IAW C-12-114-000/CF-353)		1
	-22	NAS623-3-3		.SCREW		3
		AN960PD10L		.WASHER		3
		MS21042L3		.NUT		3
R	-23	782-1-6HT		.CLIP - (V00502)		2
	-24	NAS623-3-3		.SCREW		1
	-25	NAS623-3-2		.SCREW		1
		AN960PD10L		.WASHER		2
		MS21042L3		.NUT		2
	-26	MS21924-6		.UNION - (FUS STA 314 SPEEDBRAKE)		2
		AN960-916L		.WASHER		2
		AN924-6		.NUT		2
R	-27	AE1002256G0130		.HOSE ASSY - (V69705) (SPEEDBRAKE OPEN)		1
R	-28	AE1002256G0150		.HOSE ASSY - (V69705) (SPEEDBRAKE CLOSE)		1
	-29	MS21915-8-6		.BUSHING		1
				-000-		
			*	IAW C-12-114-000/CF-389		

SECTION 9

HEAT & VENT & PRESSURIZATION SYSTEM

TABLE OF CONTENTS

FIGURE	TITLE	PAGE
92	HEAT & VENT & PRESSURIZATION SYSTEM	9-02
93	COMPLETE HEAT & VENT & PRESSURIZATION SYSTEM	9-04
94	PRESSURE REGULATOR, DUMP VALVE & STATIC LINES	9-06
95	WINDSHIELD RAIN REMOVAL SYSTEM	9-08
96	COCKPIT HEAT DISTRIBUTION & RAM AIR	9-10
97	COCKPIT CANOPY SEAL SYSTEM	9-14
98	WATER SEPARATOR & DISTRIBUTION SYSTEM	9-18
99	ENGINE TO FIREWALL BLEED AIR SYSTEM	9-22

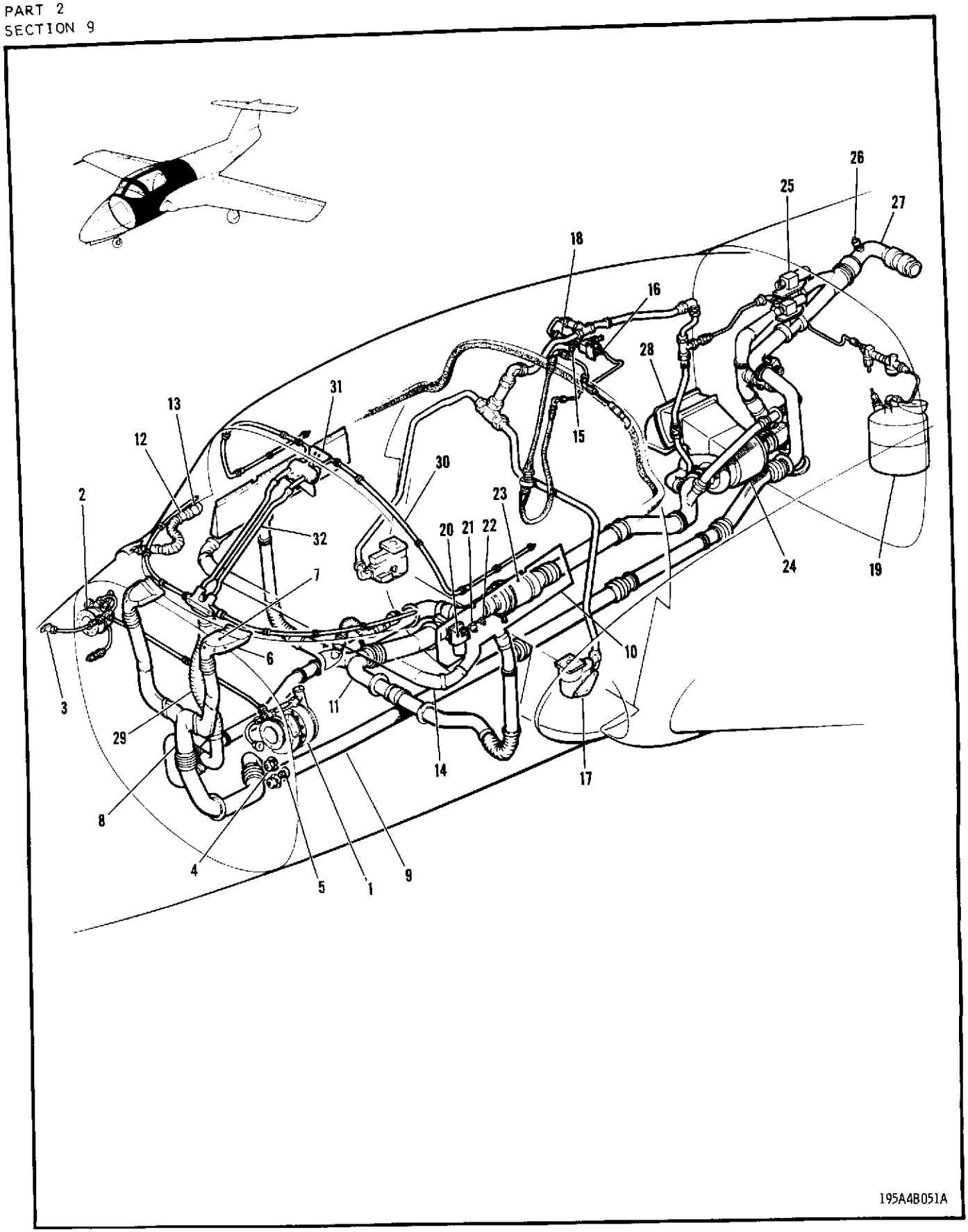

FIGURE 92 HEAT & VENT & PRESSURIZATION SYSTEM

FIGURE AND INDEX NUMBER	GROUP	HEAT & VENT & PRESSURIZAT	EFFEC-TIVITY	UNITS PER ASSY
	MAJOR ASSEMBLY	HEAT & VENT & PRESSURIZATION SYSTEM		
	PART NUMBER	1 2 3 4 5 6 7 NOMENCLATURE		
92 - 1	102196-2	REGULATOR ASSY - CABIN PRESSURE (SEE FIG. 94)		REF
- 2	103308-1	VALVE ASSY - SAFETY & DUMP (SEE FIG. 94)		REF
- 3	41A-97205	ADAPTER ASSY - SKIN CONNECTION SPECIAL (SEE FIG. 94)		REF
- 4	41A-97203-2	FITTING - GROUND TEST AIR SOURCE (SEE FIG. 94)		REF
- 5	41A-97206	FITTING - GROUND TEST (SEE FIG. 94)		REF
- 6	41A-80201	NOZZLE - RAIN REMOVAL (SEE FIG. 95)		REF
- 7	41A-80202-2	FAIRING ASSY - RAIN REMOVAL (SEE FIG. 95)		REF
- 8	41A-80203-800	DUCT ASSY - RAIN REMOVAL (SEE FIG. 95)		REF
- 9	41A-80204-806	DUCT ASSY - RAIN REMOVAL (SEE FIG. 95)		REF
-10	41A-95212-800	OUTLET ASSY - SHOULDER (SEE FIG. 96)		REF
-11	41A-95214	DUCT ASSY - (SEE FIG. 96)		REF
-12	F5040-16	VALVE ASSY - (CHECK) (SEE FIG. 96)		REF
R -13	41-96291-2	VENTILATOR ASSY - (RAM AIR CABIN) (SEE FIG. 96)		REF
-14	41A-35091-2	TUBE ASSY - WELDED CROSS (SEE SECTION 3)		REF
-15	41A-97700	CAP ASSY - PRESSURE TEST CONNECTION (SEE FIG. 97)		REF
-16	1182B-CL41	REGULATOR ASSY - (SEE FIG. 97)		REF
-17	MS24350-1	VALVE ASSY - (ANTI-G) (SEE FIG. 97)		REF
-18	279A4TB	VALVE ASSY - (CHECK) (SEE FIG. 97)		REF
-19	41A-75023	RESERVOIR ASSY - MAIN HYD (SEE SECTION 8)		REF
-20	321094-3-1	VALVE ASSY - (BUTTERFLY SHUT OFF) (SEE FIG. 98)		REF
-21	26220068	SENSOR - (OVERHEAT) (SEE FIG. 98)		REF
-22	30050-15	SENSOR - (OUTLINE TEMP) (SEE FIG. 98)		REF
-23	85020-2	SEPARATOR ASSY - (WATER) (SEE FIG. 98)		REF
-24	682565-1	REFRIGERATION ASSY - (SEE FIG. 98)		REF
-25	321682-1-1	VALVE ASSY - (SHUT OFF) (SEE FIG. 99)		REF
-26	26220068	SENSOR - (OVERHEAT) (SEE FIG. 99)		REF
-27	41A-98206	DUCT ASSY - FLEXIBLE ELBOW (SEE FIG. 99)		REF
-28	41A-96202-48	DUCT ASSY - HEAT EXCHANGER COOLING AIR (SEE SECTION 3)		REF
-29	3-1664-12-86-6	HOSE - (FLEXIBLE) (SEE SECTION 10)		REF
-30	41A-42007	TUBE ASSY - DEMIST (SEE SECTION 10)		REF
-31	41A-42002	INTERCONNECT - WINDSHIELD DEMIST MALE (SEE SECTION 10)		REF
-32	41A-42004	TUBE - WINDSHIELD DEMIST VERTICAL (SEE SECTION 3)		REF

-OOO-

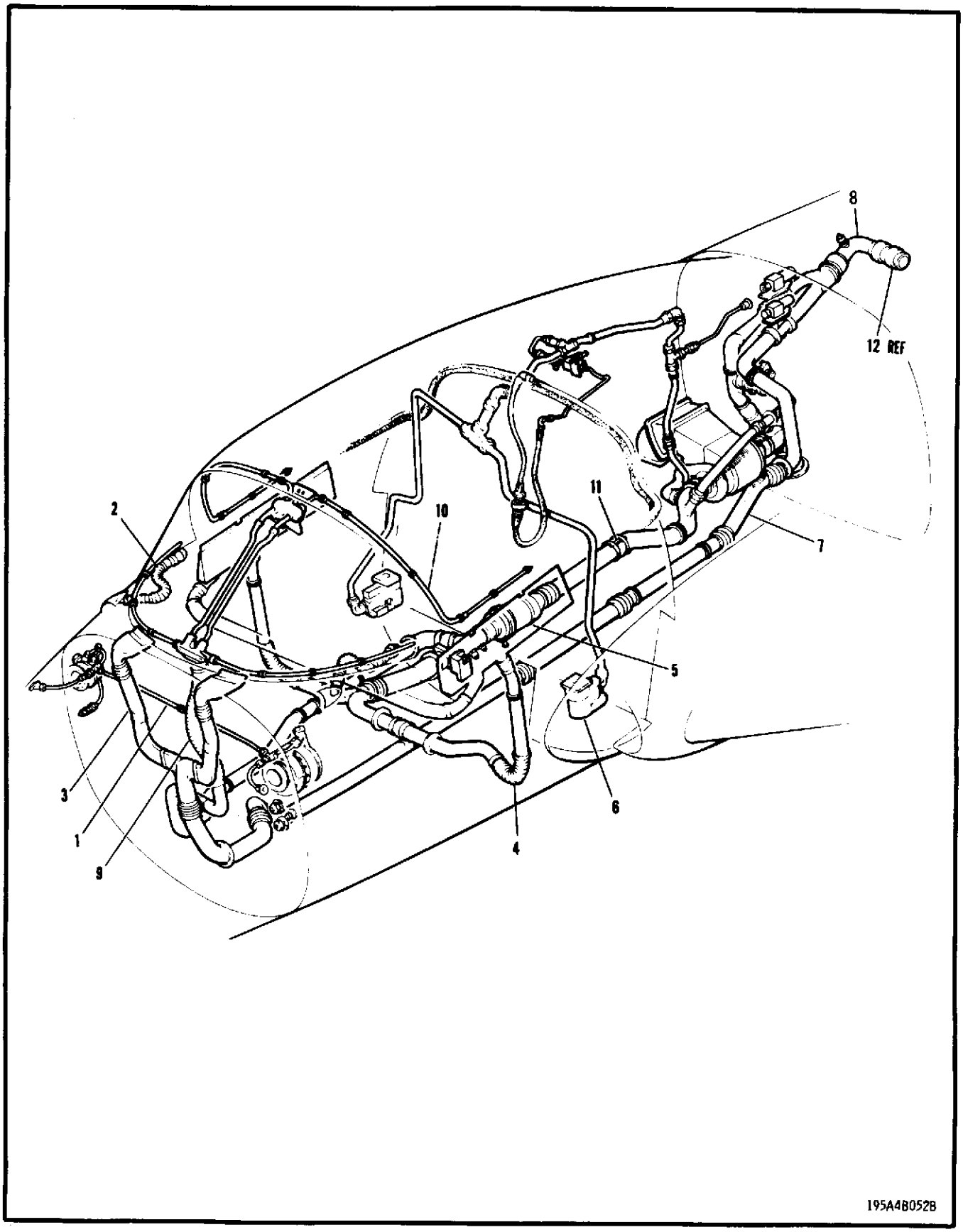

FIGURE 93 COMPLETE HEAT & VENT & PRESSURIZATION SYSTEM

FIGURE AND INDEX NUMBER	GROUP	HEAT & VENT & PRESSURIZAT	EFFEC-TIVITY	UNITS PER ASSY
	MAJOR ASSEMBLY	COMPLETE HEAT & VENT & PRESSURIZATION SYSTEM		
	PART NUMBER	1 2 3 4 5 6 7 NOMENCLATURE		
93 -	41A-42000	AIR CONDITIONING SYS INSTL - COMPLETE (SEE SECTION 3)		NP
- 1	41A-95002	.CHECK VALVE & STATIC LINE INSTL - PRESSURE REGULATOR (SEE FIG. 94)		REF
- 2	41A-42000-1	.RAM AIR SYS INSTL - COCKPIT (SEE FIG. 96)		REF
- 3	41A-42000-9	.RAIN REMOVAL SYS INSTL - WINDSHIELD (SEE FIG. 95)		REF
- 4	41A-42000-5	.HEAT DISTRIBUTION SYS INSTL - COCKPIT (SEE FIG. 96)		REF
- 5	41A-42000-6	.SEPARATOR INSTL - WATER (SEE FIG. 98)		REF
- 6	41A-42000-10	.ANTI-G & CANOPY SEAL SYSINSTL - COCKPIT (SEE FIG. 97)		REF
- 7	41A-42000-8	.DISTRIBUTION SYS INSTL - FIREWALL TO MAIN SPAR (SEE FIG. 98)		REF
- 8	41A-42000-7	.BLEED AIR SYS INSTL - ENG TO FIREWALL (SEE FIG. 99)		REF
- 9	41A-42000-2	.DEMIST SYS INSTL - WINDSHIELD (SEE SECTION 10)		REF
-10	41A-42000-3	.DEMIST SYS INSTL - CANOPY (SEE SECTION 10)		REF
R -11	S1296	.STRIP - (V88308)		AR
-12	18276-250	CLAMP - (SEE SECTION 5)		REF

-OOO-

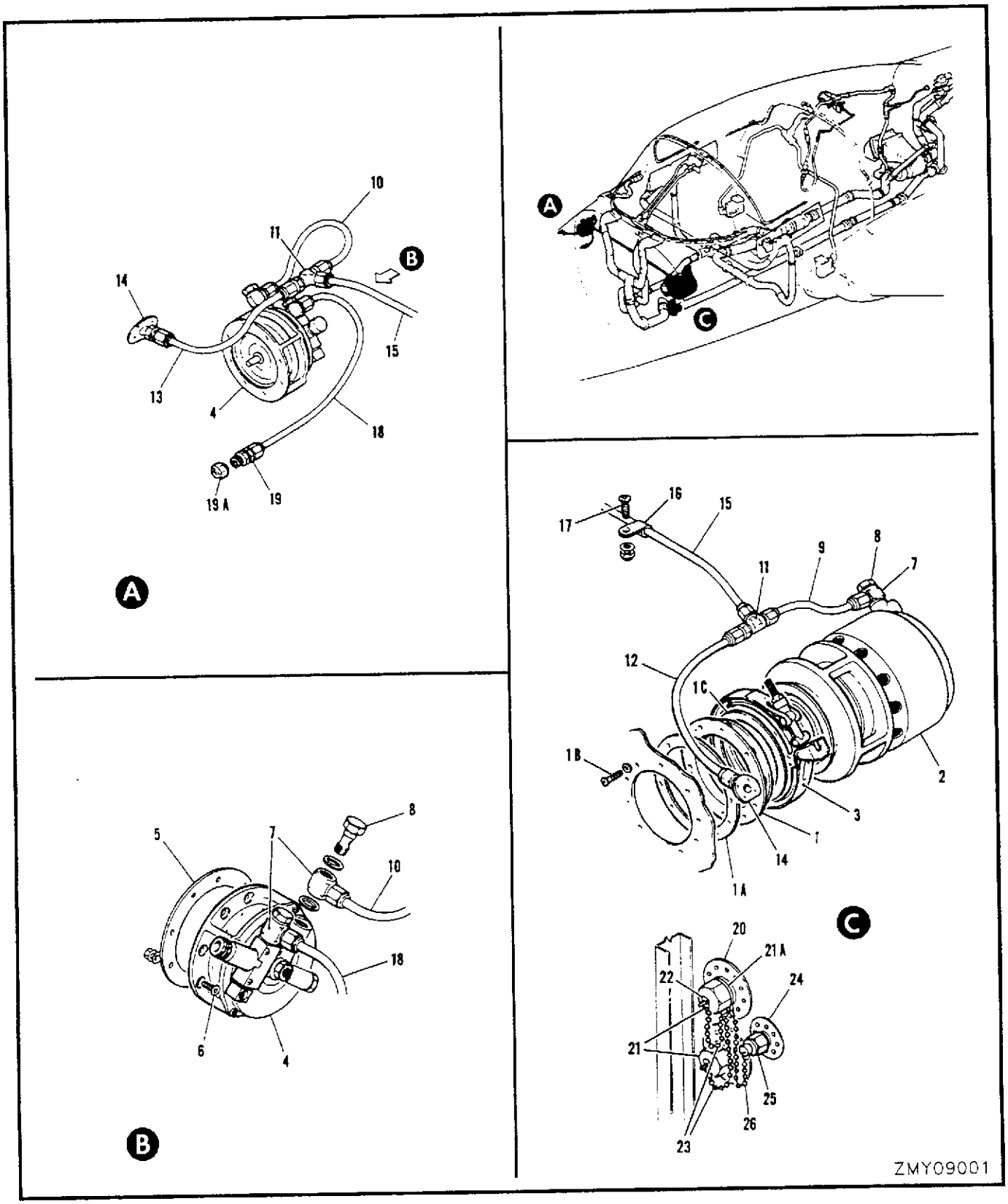

FIGURE 94 PRESSURE REGULATOR, DUMP VALVE & STATIC LINES

FIGURE AND INDEX NUMBER	GROUP	HEAT & VENT & PRESSURIZAT	EFFEC-TIVITY	UNITS PER ASSY
	MAJOR ASSEMBLY	PRESSURE REGULATOR, DUMP VALVE & STATIC LINES		
	PART NUMBER	1 2 3 4 5 6 7 NOMENCLATURE		
94 -	41A-95002	CHECK VALVE & STATIC LINE INSTL - PRESSURE REGULATOR (SEE FIG. 93)		NP
- 1	41-96809-800	.FLANGE ASSY - STUD		1
- 1A	41A-97207	.SEAL - PRESSURE REGULATOR VALVE		1
- 1B	MS35207-265	.SCREW		10
	AN960PD10	.WASHER		10
- 1C	41-96806	.SEAL		1
- 2	102196-2	.REGULATOR - (V70210) (CABIN PRESSURE) (IAW 41A-97100) (FOR BRKDN SEE C-13-B19-000/MS-000)		1
	14523-2	..FILTER ASSY - (V70210)		1
	14615	..GASKET - (V70210)		1
	14625	..GASKET - (V70210)		1
	14684	..GASKET - (V70210)		1
	14990	..GASKET - (V70210)		1
	135751	..GASKET - (V70210)		1
- 3	15183-53125SH	.COUPLING - (V75829)		1
- 4	103308-1	.VALVE ASSY - (V70210) (SAFETY & DUMP) (IAW 41A-97101) (FOR BRKDN SEE C-13-B20-000/MS-000)		1
	14523-14	..FILTER ASSY - (V70210)		1
- 5	41A-97200	.SEAL		1
R - 6	MS35207-264	.SCREW		8
	AN960PD10L	.WASHER		8
	MS21042L3	.NUT		8
- 7	AN776-4D	.ELBOW		3
- 8	AN775-4D	.BOLT		3
	AN901-4A	.GASKET		3
- 9	41A-97201-6	.LINE ASSY - BULKHEAD TO REGULATOR STATIC		1
-10	41A-97201-10	.LINE ASSY - BULKHEAD TO SAFETY VALVE STATIC		1
-11	AN804D4	.TEE		2
	AN960PD716	.WASHER		2
	AN924-4D	.NUT		2
-12	41A-97201-12	.LINE ASSY - STA 142 TO BULKHEAD LH		1
-13	41A-97201-3	.LINE ASSY - STA 142 TO BULKHEAD RH		1
-14	41A-97205	.ADAPTER ASSY - SKIN CONNECTION SPECIAL		2
-15	41A-97201-4	.LINE ASSY - BULKHEAD BL-19 RH TO BL-19 LH STATIC		1
-16	AS4580/2	.CLIP - (V35076) (NYLASTIC)		3
R -17	MS35207-259	.SCREW		3
	AN960PD10L	.WASHER		3
	MS21042L3	.NUT		3
-18	41A-97201-8	.LINE ASSY - SAFETY VALVE TO BULKHEAD DUMP		1
-19	AN832-4D	.UNION		1
	AN960PD716	.WASHER		1
	AN924-4D	.NUT		1
-19A	AN818-4D	.NUT - (TO PREVENT USE OF PLUG)		1
-20	41A-97203-2	.FITTING - GROUND TEST AIR SOURCE		2
-21	41A-97204	.CAP - GROUND TEST AIR SOURCE FITTING		2
-21A	41A-97202	.GASKET		2
-22	A1037-012-3	.NUT - (V78533)		2
-23	NAS1201B6A8A	.CHAIN		2
-24	41A-97206	.FITTING - GROUND TEST		1
-25	AN929A4	.CAP ASSY		1
-26	NAS1201B6A11A	.CHAIN		1

-000-

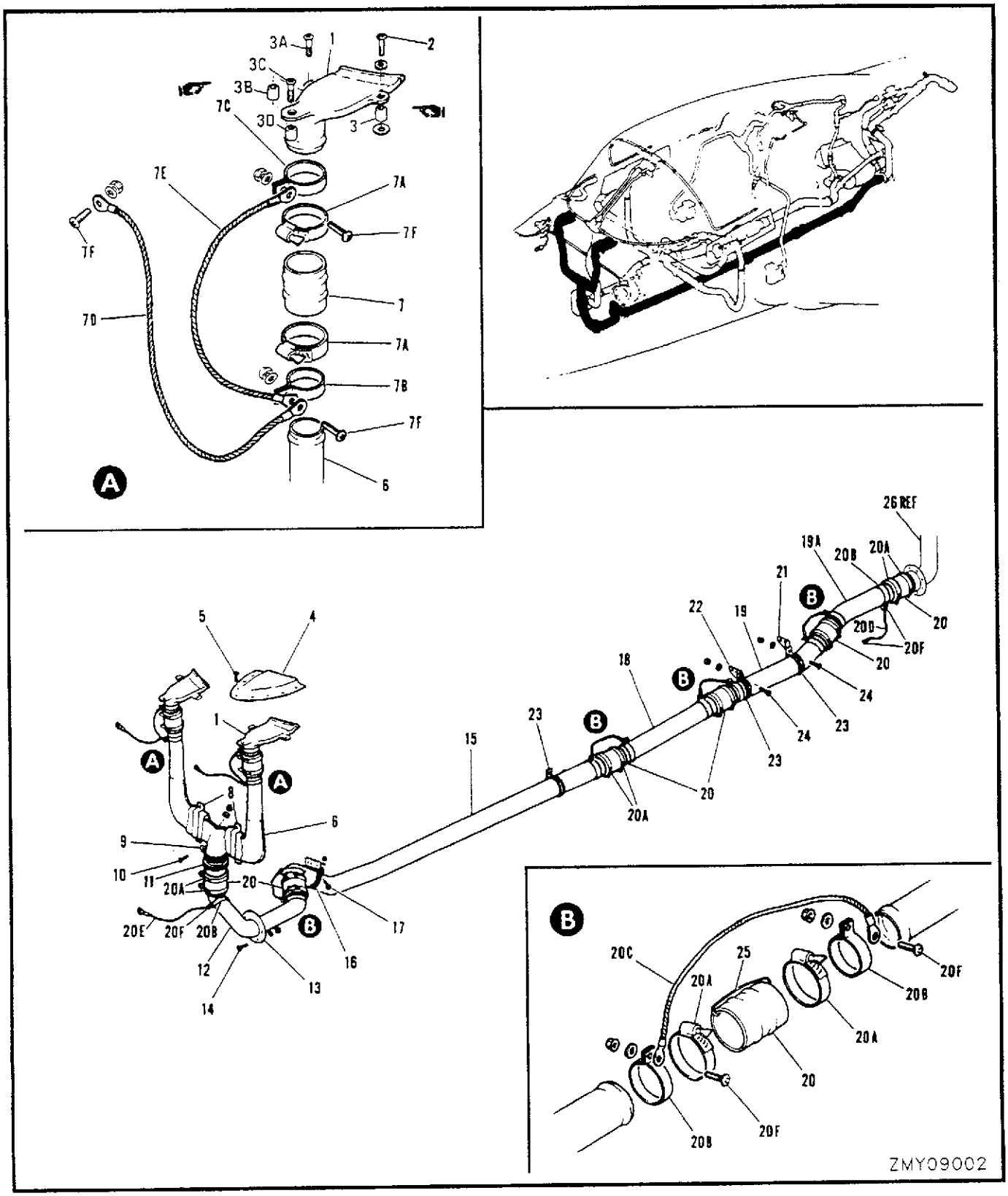

FIGURE 95 WINDSHIELD RAIN REMOVAL SYSTEM

FIGURE AND INDEX NUMBER	GROUP: HEAT & VENT & PRESSURIZAT MAJOR ASSEMBLY: WINDSHIELD RAIN REMOVAL SYSTEM PART NUMBER		1 2 3 4 5 6 7 NOMENCLATURE	EFFEC-TIVITY	UNITS PER ASSY
95 -	41A-42000-9		RAIN REMOVAL SYS INSTL - WINDSHIELD (SEE FIG. 93)		NP
- 1	41A-80201		.NOZZLE - RAIN REMOVAL LH		1
	41A-80201-1		.NOZZLE - RAIN REMOVAL RH		1
- 2	MS27039-1-23	*	.SCREW		2
- 3	NAS43DD3-60	*	.SPACER		2
- 3A	MS27039-1-21	*	.SCREW		2
- 3B	NAS43DD3-47	*	.SPACER		2
- 3C	MS27039-1-19	*	.SCREW		2
- 3D	NAS43DD3-39	*	.SPACER		2
	AN960PD10L	*	.WASHER		6
- 4	K41A-35008-50	*	.FAIRING ASSY - RAIN REMOVAL LH	A	1
	K41A-35008-51	*	.FAIRING ASSY - RAIN REMOVAL RH	A	1
	41A-80202-2	**	.FAIRING ASSY - RAIN REMOVAL LH		1
	41A-80202-3	**	.FAIRING ASSY - RAIN REMOVAL RH		1
- 5	MS27039-1-07		.SCREW	A	16
	AN960PD10L	*	.WASHER	A	16
- 6	41A-80203-800		.DUCT ASSY - RAIN REMOVAL		1
- 7	712329-15-14		.HOSE - (V70628)		2
- 7A	AN737TW56-66		.CLAMP		4
- 7B	AN735D24		.CLAMP		2
- 7C	AN735D28		.CLAMP		2
- 7D	MS25083-1BB6		.JUMPER ASSY		2
- 7E	MS25083-1BB4		.JUMPER ASSY		2
- 7F	MS35207-261		.SCREW		6
	AN960PD10L		.WASHER		6
	MS21042L3		.NUT		6
- 8	41A-80203-20		.CLAMP - RAIN REMOVAL DUCT		2
	41A-42000-38		.PACKING		2
	41A-80203-18		.ANGLE		1
- 9	MS21919WH34		.CLAMP		1
-10	MS35207-264		.SCREW		1
	AN960PD10L		.WASHER		1
	MS21042L3		.NUT		1
-11	41A-42000-203		.GROMMET - RAIN REMOVAL DUCT (MAKE FROM G51TB (NYO))		1
-12	41A-80200-800		.DUCT ASSY - RAIN REMOVAL		1
R -13	41A-98212-18		.RING - AIR CONDITIONING DUCT SECURING (MAKE FROM 5330-00-599-7708)		1
-14	MS35207-264		.SCREW		6
	AN960PD10L		.WASHER		6
	MS21042L3		.NUT		6
-15	41A-80204-806		.DUCT ASSY - RAIN REMOVAL		1
	41A-80204-24		.ANGLE - SUPPORT		1
-16	751S34-8		.CLIP - (V00502)		1
-17	MS35207-264		.SCREW		2
	AN960PD10L		.WASHER		2
	MS21042L3		.NUT		2
-18	41A-80204-804		.DUCT ASSY - RAIN REMOVAL		1
-19	41A-80204-802		.DUCT ASSY - RAIN REMOVAL		1
-19A	41A-98207-800		.DUCT ASSY - FUSELAGE STA 275-277		1
-20	712329-2-14		.HOSE - (V70628)		6
-20A	AN737TW74-91		.CLAMP		12
-20B	AN735D32		.CLAMP		10
		*	IAW C-12-114-000/CF-449		
		**	IAW C-12-114-000/CF-512		
		A	AIRCRAFT WITHOUT C-12-114-000/CF-512 INCORPORATED		

	FIGURE AND INDEX NUMBER	GROUP	HEAT & VENT & PRESSURIZAT	EFFEC-TIVITY	UNITS PER ASSY
		MAJOR ASSEMBLY	WINDSHIELD RAIN REMOVAL SYSTEM		
		PART NUMBER	1 2 3 4 5 6 7 NOMENCLATURE		
	95 -20C	MS25083-1BB5	.JUMPER ASSY		4
	-20D	MS25083-1BB6	.JUMPER ASSY		1
	-20E	MS25083-1BB8	.JUMPER ASSY		1
R	-20F	MS35207-261	.SCREW		12
		AN960PD10L	.WASHER		12
		MS21042L3	.NUT		12
	-21	41A-80204-22	.ANGLE - SUPPORT		1
	-22	41A-80204-20	.ANGLE - SUPPORT		1
	-23	MS21919WCJ32	.CLAMP		3
R	-24	MS35207-264	.SCREW		2
		AN960PD10L	.WASHER		2
		MS21042L3	.NUT		2
R	-25	S1296	.STRIP - (V88308) (BONDING)		AR
	-26	41A-98210	DUCT ASSY - (SEE FIG. 99)		REF

-000-

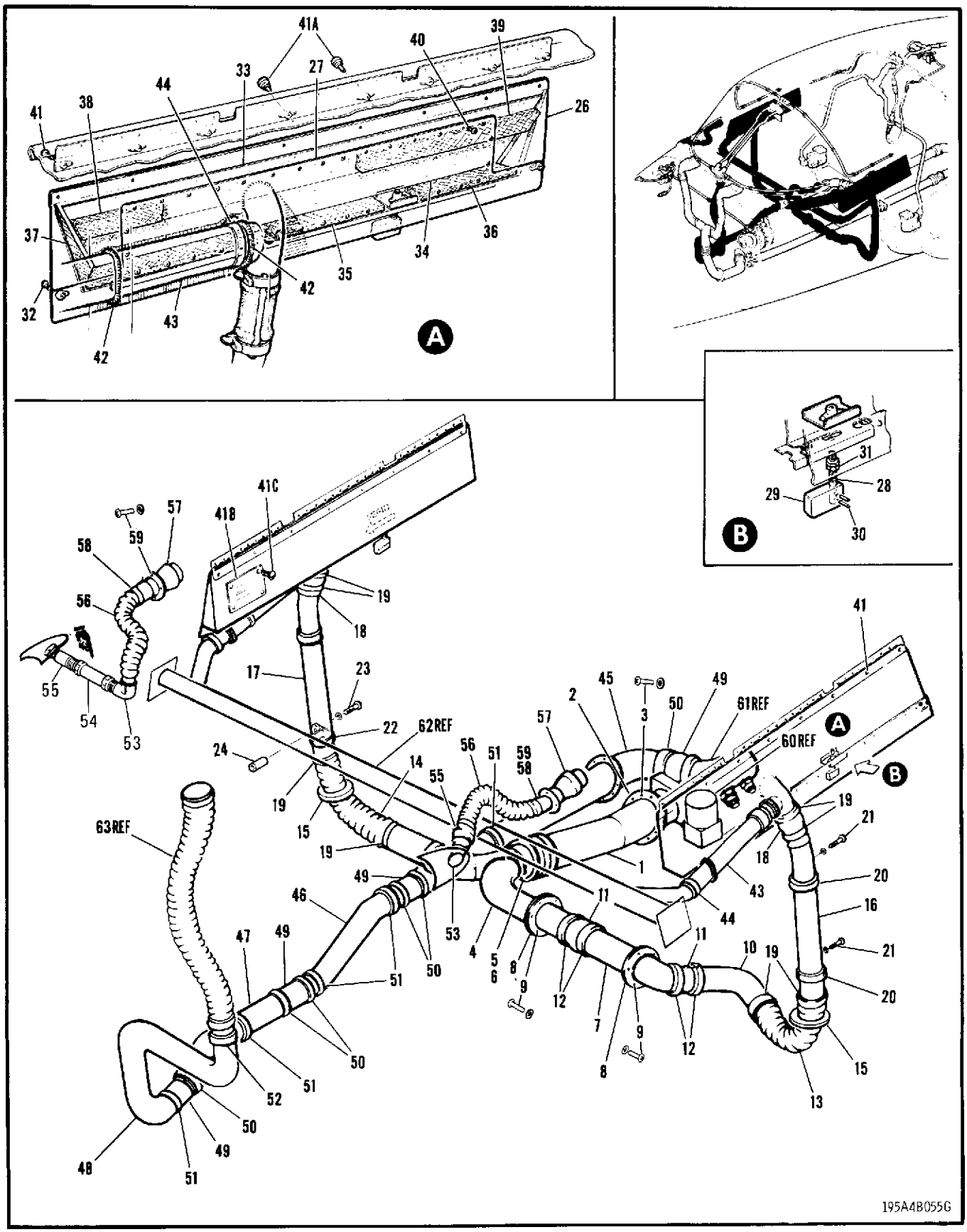

195A4B055G

FIGURE 96 COCKPIT HEAT DISTRIBUTION & RAM AIR

	FIGURE AND INDEX NUMBER	GROUP	HEAT & VENT & PRESSURIZAT	EFFEC-TIVITY	UNITS PER ASSY
		MAJOR ASSEMBLY	COCKPIT HEAT DISTRIBUTION & RAM AIR		
		PART NUMBER	1 2 3 4 5 6 7 NOMENCLATURE		
R	96 -	41A-42000-5	HEAT DISTRIBUTION SYS INSTL - COCKPIT (SEE FIG. 93) (MODIFIED BY K41A-95000)		NP
	- 1	41A-95202-2	.DUCT ASSY		1
	- 2	9470K61	.GASKET		1
	- 3	MS35207-264	.SCREW		10
		AN960PD10L	.WASHER		10
	- 4	41A-95214	.DUCT ASSY		1
	- 5	501-250	.GASKET - (V75829)		1
	- 6	N50-250SH	.COUPLING - (V94581)		1
	- 7	41A-95208-4	.DUCT ASSY		1
	- 8	9470K61	.GASKET		2
	- 9	MS35207-264	.SCREW		12
		AN960PD10L	.WASHER		12
	-10	41A-95211	.DUCT ASSY		1
	-11	S1286-14-12	.HOSE - (V88308)		2
	-12	AN737TW56-66	.CLAMP		4
	-13	3-1664-14-60-6	.HOSE - (V70628) (FLEXIBLE LH)		1
	-14	3-1664-14-68-6	.HOSE - (V70628) (FLEXIBLE RH)		1
	-15	41A-42000-221	.SLEEVE		2
	-16	41A-95208-800	.DUCT - LH		1
	-17	41A-95208-801	.DUCT ASSY - RH		1
	-18	S1286-14-12	.HOSE - (V88308)		2
	-19	AN737TW56-66	.CLAMP		8
	-20	MS21919WDG28	.CLAMP - (LH)		2
	-21	MS35207-264	.SCREW		2
		AN960PD10L	.WASHER		2
		MS21042L3	.NUT		2
	-22	MS21919WDG28	.CLAMP - (RH)		1
	-23	AN3-13A	.BOLT - (RH)		1
	-24	NAS43DD3-52	.SPACER - (RH)		1
		AN960PD10L	.WASHER - (RH)		1
		41A-95212-800	.OUTLET ASSY - SHOULDER LH		1
		41A-95212-801	.OUTLET ASSY - SHOULDER RH		1
	-25		DELETED		
R		41A-95212-802	..OUTLEY ASSY - LH		1
R		41A-95212-803	..OUTLEY ASSY - RH		1
	-26	41A-95212-804	...BOX ASSY - LH		1
		41A-95212-805	...BOX ASSY - RH		1
	-27	41A-95212-806	...BOX ASSY - LH		1
		41A-95212-807	...BOX ASSY - RH		1
		41A-95700	....HANDLE ASSY		1
	-28	41A-95700-2	.....STUD		1
	-29	41A-95700-4	.....HANDLE		1
	-30	NAS561-2-7	.....PIN		2
	-31	AN316-4R	....NUT		2
	-32	MS27039-1-09	....SCREW		2
	-33	41A-95212-54	...CORK		AR
	-34	41A-95212-66	...CORK		AR
	-35	41A-95212-56	...FELT - LH		AR
		41A-95212-57	...FELT - RH		AR
	-36	41A-95212-58	...FELT		AR
	-37	41A-95212-60	...FELT		AR
	-38	41A-95212-62	...FELT		AR
	-39	41A-95212-64	...FELT		AR
	-40	MS35206-241	...SCREW		33
	-41	MS27039-1-09	..SCREW - (6 ON LH & 8 ON RH)		8
	-41A	AN227-10-6	..STUD - (LH)		2
	-41B	S1389	..NAMEPLATE - (V88308) (RH)		1
	-41C	AN530-6R4	..SCREW - (RH)		4
	-42	41A-42000-211	.GROMMET		4
	-43	S1286-12-65	.HOSE - (V88308) (MAKE FROM BULK MATERIAL NAS520-12-480)		2
	-44	AN737TW58	.CLAMP		4

FIGURE AND INDEX NUMBER	GROUP	HEAT & VENT & PRESSURIZAT	EFFEC-TIVITY	UNITS PER ASSY
	MAJOR ASSEMBLY	COCKPIT HEAT DISTRIBUTION & RAM AIR		
	PART NUMBER	1 2 3 4 5 6 7 NOMENCLATURE		
96 -45	41A-95201-2	.DUCT ASSY		1
-46	41A-95201-10	.DUCT ASSY		1
-47	41A-95200-2	.DUCT ASSY		1
-48	41A-95203	.DUCT ASSY		1
-49	S1286-12-12	.HOSE - (V88308)		4
-50	AN737TW56-66	.CLAMP		8
-51	MS21919WDG26	.CLAMP		5
	AN737TW66	.CLAMP		10
-52	MS21919WG24	.CLAMP		1
	MS35207-264	.SCREW		6
	AN960PD10L	.WASHER		6
	S1296	.STRIP - (V88308) (BONDING)		AR
	41A-42000-1 *	RAM AIR SYS INSTL - COCKPIT (SEE FIG. 93)		NP
-53	AN842-16D *	.ELBOW - 90 DEGREES		1
-54	583-3/4D1 *	.VALVE		1
-55	C72B47274-1 *	.ADAPTER - (RH)		1
	C72B47274-2 *	.ADAPTER - (LH)		1
-56	3-1124-8-42-6	.HOSE - (V70628) (FLEXIBLE)		2
-57	41-96291-2	.VENTILATOR ASSY - (V83564) (RAM AIR CABIN)		2
-58	AN737TW34-38	.CLAMP		4
-59	MS35206-245	.SCREW		8
	AN960PD8L	.WASHER		6
	MS21042L08	.NUT		6
-60	321094-3-1	VALVE ASSY - WINDSHIELD DEMIST (SEE FIG. 98)		REF
-61	41A-95220	DUCT ASSY - (SEE FIG. 98)		REF
-62	41A-35091-2	TUBE ASSY - WELDED CROSS (SEE SECTION 3)		REF
-63	3-1664-12-86-6	HOSE - (SEE SECTION 10)		REF
R	K41A-95000	KIT - IMPROVED AIR CONDITIONING COCKPIT SHOULDER OUTLETS		NP
R	AN530-10R20	.SCREW		1
R	NAS43DD3-50	.SPACER		1
R	FX90	.GROMMET		1
		-000-		
	*	IAW C-12-114-000/CF-401		

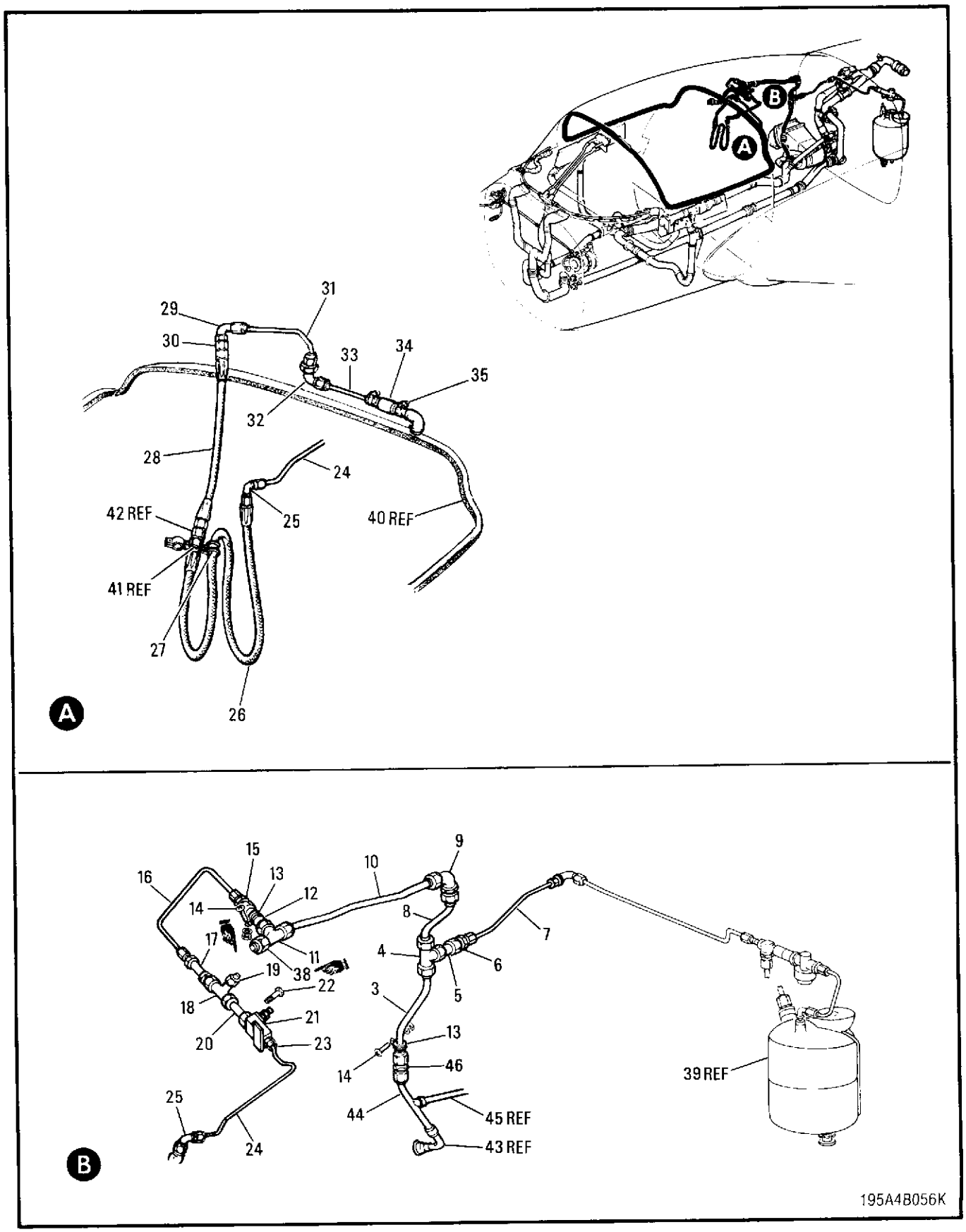

FIGURE 97 COCKPIT CANOPY SEAL SYSTEM

FIGURE AND INDEX NUMBER	GROUP	HEAT & VENT & PRESSURIZAT	EFFEC-TIVITY	UNITS PER ASSY
	MAJOR ASSEMBLY	COCKPIT CANOPY SEAL SYSTEM		
	PART NUMBER	1 2 3 4 5 6 7 NOMENCLATURE		
97 -	41A-42000-10	CANOPY SEAL SYSTEM INSTL - COCKPIT (MOD BY C-12-114-000/CF-376)		NP
- 1		DELETED		
- 2		DELETED		
- 3	41A-95218-36	.LINE ASSY - AIR PRESSURE		1
- 4	AN824-16D	.TEE		1
- 5	41A-95218-30	.LINE ASSY - ADAPTER PIPE		1
- 6	AN919-21D	.ADAPTER		1
- 7	41A-95218-14	.LINE ASSY - HYDRAULIC TANK		1
	S1207-18	..TAPE - (V88308)		AR
- 8	41A-95218-38	.LINE ASSY - AIR PRESSURE		1
- 9	AN833-16D	.ELBOW		1
	AN960PD2116	.WASHER		1
	AN924-16D	.NUT		1
-10	41A-95218-26	.LINE ASSY - AIR PRESSURE		1
-11	AN824-16D	.TEE		1
-12	41A-95218-30	.LINE ASSY - ADAPTER PIPE		1
R -13	MS21919WH16	.CLAMP		2
R -14	MS35207-264	.SCREW		2
	AN960PD10L	.WASHER		2
	MS21042L3	.NUT		2
-15	AN919-21D	.ADAPTER		1
-16	41A-95218-6	.LINE ASSY - FUS STA 236 CANOPY SEAL		1
	S1214-180	..TAPE - (V88308)		AR
-17	279A4TB	.VALVE ASSY - (V91816) (CHECK)		1
-18	AN804D4	.TEE		1
	AN924-4D	.NUT		1
	AN6290-4	.PACKING		1
	41A-97700	.CAP ASSY - PRESSURE TEST CONNECTION		1
-19	AN929A4	..CAP ASSY		1
-20	41A-95218-32	.LINE ASSY - ADAPTER PIPE		1
-21	11182B-CL41	.REGULATOR ASSY - (V07797) FOR BKDN SEE C-13-C05-000/MN-000		1
-22	AN3-16	.BOLT		4
-23	AN815-4D	.UNION		2
	MS28778-4	.PACKING		2
-24	41A-95218-8	.LINE ASSY - FUS STA 236 TO REAR BULKHEAD CANOPY SEAL		1
	S1214-180	..TAPE - (V88308)		AR
-25	AN833-4D	.ELBOW		1
	AN901-4A	.GASKET		1
	AN924-4D	.NUT		1
-26	AE1000612E0210	.HOSE		1
R -27	MS21919WDG8	.CLAMP		1
-28	AE1000612B0090	.HOSE		1
-29	AN833-4D	.ELBOW		1
	AN960PD716	.WASHER		4
	AN6289-4D	.NUT		1
-30	AN894D4-3	.BUSHING		1
	MS28777-4	.RING		1
	MS28778-4	.PACKING		1
-31	41A-95218-10	.LINE ASSY - REAR BULKHEAD CANOPY SEAL		1
	S1214-180	..TAPE - (V88308)		AR
-32	AN833-4D	.ELBOW		1
	AN901-4A	.GASKET		1
	AN924-4D	.NUT		1
-33	41A-95218-12	.LINE ASSY - REAR BULKHEAD ELBOW TO HOSE CANOPY SEAL		1
	S1214-180	..TAPE - (V88308)		AR
-34	41A-42000-118	.HOSE - CANOPY SEAL		1
-35	AN737TW22	.CLAMP		2
	S1296	.STRIP - (V88308) (BONDING)		AR

FIGURE AND INDEX NUMBER	GROUP	HEAT & VENT & PRESSURIZAT	EFFEC-TIVITY	UNITS PER ASSY
	MAJOR ASSEMBLY	COCKPIT CANOPY SEAL SYSTEM		
	PART NUMBER	1 2 3 4 5 6 7 NOMENCLATURE		
97 -36		DELETED		
-37		DELETED		
-38	AN929-16	.CAP		1
-39	41A-75023-800	RESERVOIR ASSY - HYDRAULIC (SEE SECTION 8)		REF
-40	41A-30062	SEAL - PRESSURE (CANOPY) (SEE SECTION 3)		REF
-41	315078-4	COUPLING ASSY - (BREAKAWAY) (SEE SECTION 3)		REF
-42	AN894D4-3	BUSHING - (SEE SECTION 3)		REF
-43	41A-98207-4	DUCT ASSY - (SEE FIG. 98)		REF
	K41A-60018 *	KIT - FUEL SYSTEM INSTL AUX TANKS (SEE SECTION 6)		REF
-44	K41A-60018-16	.LINE ASSY - (WELDED)		1
-45	41A-65209-16	.LINE ASSY - SHUT OFF VALVE TO WATER SEP (SEE SECTION 6)		REF
-46	AN815-16D	.UNION		1
		-000-		
	*	IAW C-12-114-000/CD-031		

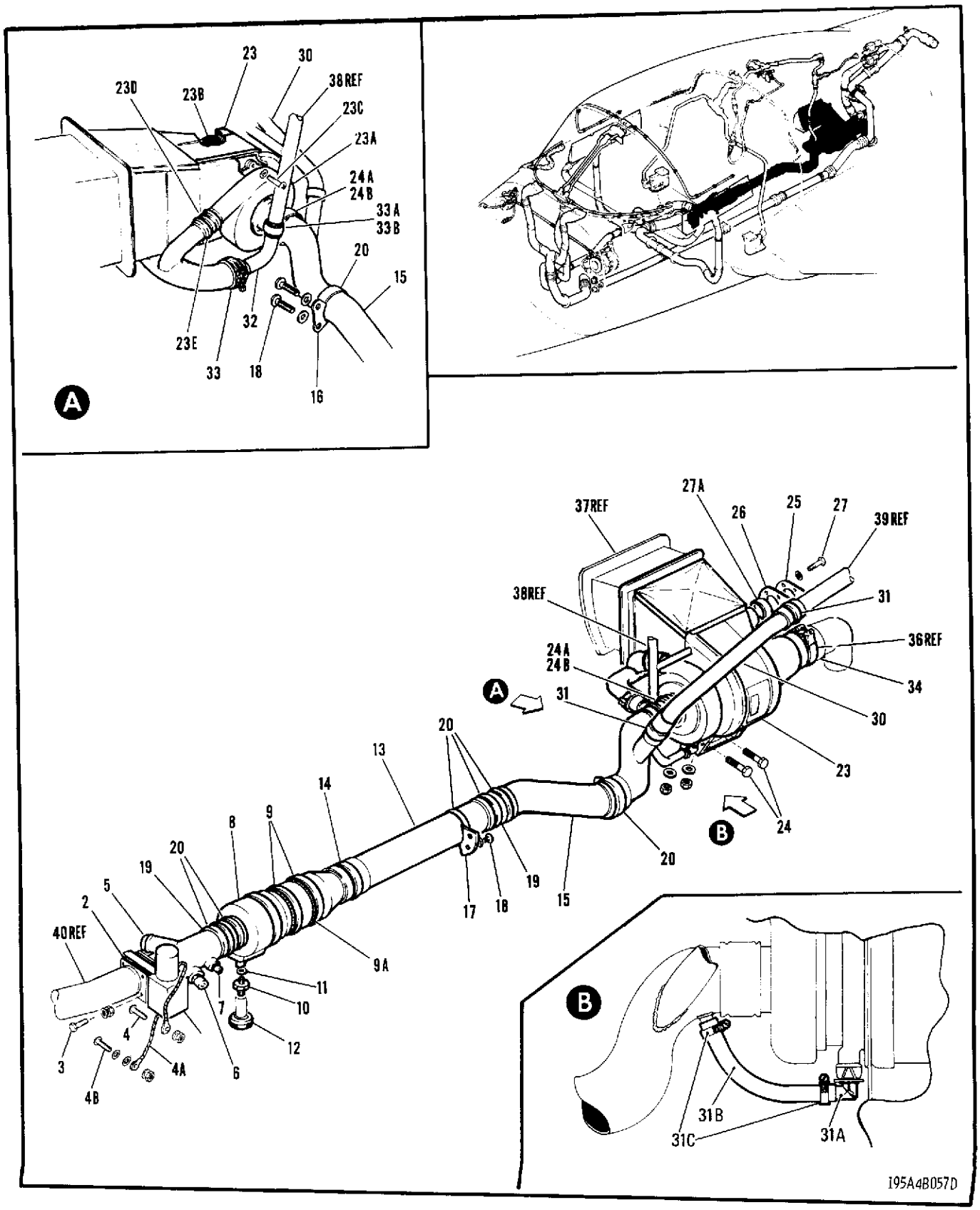

FIGURE 98 WATER SEPARATOR & DISTRIBUTION SYSTEM

	FIGURE AND INDEX NUMBER	GROUP	HEAT & VENT & PRESSURIZAT	EFFEC-TIVITY	UNITS PER ASSY
		MAJOR ASSEMBLY	WATER SEPARATOR & DISTRIBUTION SYSTEM		
		PART NUMBER	1 2 3 4 5 6 7 NOMENCLATURE		
	98 -	41A-42000-6	SEPARATOR INSTL - WATER (SEE FIG. 93)		NP
	- 1	321094-3-1	.VALVE ASSY - (V08179) (BUTTERFLY SHUT OFF) (IAW 41A-81100-2) (FOR BKDN SEE C-13-B17-000/MS-000)		1
	- 2	AE1204-2-231	.PACKING - (ABJ)		2
	- 3	AN4-15A	.BOLT		4
		AN960-416L	.WASHER		4
		MS21042L4	.NUT		4
R	- 4	MS35207-264	.SCREW		1
		AN960PD10L	.WASHER		1
		MS21042L3	.NUT		1
	- 4A	NO NUMBER	.JUMPER ASSY		1
R	- 4B	MS35206-247	.SCREW		1
		AN936-B8	.WASHER		1
		AN960-8L	.WASHER		2
		AN935-8L	.WASHER		2
		AN340-8	.NUT		2
	- 5	41A-95220	.DUCT ASSY		1
		S1246K41-38-40	.WASHER - (V88308)		1
	- 6	26220068	.SENSOR - (V80234) (OVERHEAT)		1
	- 7	30050-15	.SENSOR - (V08179) (OUTLET TEMPERATURE) (IAW 41A-95106)		1
R	- 8	85020-2	.SEPARATOR ASSY - (V07217) (WATER) (IAW 41A-95100) (FOR BKDN SEE C-13-B14-000/MS-000)		1
		AN123907	..PACKING		2
	- 9	366-63-462SH	.CLAMP - (V00502)		2
	- 9A	41A-42000-83	.PACKING - (CORK)		AR
	-10	41A-95222	.FITTING - DRAIN		1
	-11	MS28778-4	.PACKING		1
	-12	MS35489-36	.GROMMET		1
	-13	41A-95200-4	.DUCT ASSY		1
		501-250	.GASKET - (V69705)		1
	-14	N50-250SH	.COUPLING - (V94581)		1
	-15	41A-95216	.DUCT ASSY - (MODIFIED)		1
	-16	41A-95217-2	.BRACKET		1
	-17	41A-95217-4	.BRACKET		1
R	-18	MS35207-264	.SCREW		4
		AN960PD10L	.WASHER		4
	-19	S1286-20-12	.HOSE - (V88308)		2
	-20	AN737TW74-91	.CLAMP		6
		S1296	.STRIP - (V88308) (BONDING)		AR
		41A-42000-8	DISTRIBUTION SYS INSTL - FIREWALL TO MAIN SPAR (SEE FIG. 93)		NP
	-21		DELETED		
	-22		DELETED		
		682565-1	.REFRIGERATION ASSY - (V08179) (IAW 41A-96100)		1
	-23	178052-1	..EXCHANGER ASSY - (V08179) HEAT		1
	-23A	203910-1	..TURBINE ASSY - (V08179) COOLING (FOR BKDN SEEC-13-B18-000/MS-000)		1
	-23B	S8171AD22	..PACKING - (V08179) (BETWEEN TURBINE & HEAT EXCHANGER)		1
	-23C	NAS1351-3H6	..SCREW - (TURBINE TO HEAT EXCHANGER RTNG)		6
		AN960-10L	..WASHER		6
	-23D	683204	..COUPLING - SLEEVE (V08179)		1
	-23E	737TW	..CLAMP		2
R	-24	AN4-6A	.BOLT		2
		AN960-416L	.WASHER		2
		MS21042L4	.NUT		2

FIGURE AND INDEX NUMBER	GROUP	HEAT & VENT & PRESSURIZATION SYST	EFFEC-TIVITY	UNITS PER ASSY
	MAJOR ASSEMBLY	WATER SEPARATOR & DISTRIBUTION SYSTEM		
	PART NUMBER	1 2 3 4 5 6 7 NOMENCLATURE		
R 98 -24A	501-250	.SLEEVE - (V75829)		1
-24B	N50-250SH	.CLAMP - (V94581)		1
-25	712359-501	.SEAL - (V70628) (FLAMEPROOFF LEXIBLE) (IAW 41A-98205-2)		1
-26	41A-98212-36	.RING ASSY - (DUCT SEALING)		1
-27	AN3-4A	.BOLT		11
	AN960-10L	.WASHER		11
-27A	AN737TW98-114	.CLAMP		1
-28		DELETED		
-29		DELETED		
-30	41A-98207-2	.DUCT ASSY		1
-31	24540-125	.COUPLING - (V75829)		2
-31A	K41A-40550-2	.FITTING ASSY		1
	MS28777-6	.WASHER		1
	MS29513-112	.PACKING		1
-31B	K41A-40550-10	.HOSE		1
-31C	AN737TW30	.CLAMP		2
-32	41A-98207-4	.DUCT ASSY		1
	24096-150A	.GASKET - (V75829)		1
-33	18276-150	.COUPLING - (V75829)		1
-33A	601-100-SH *	.COUPLING - (V75829)		1
-33B	501-100	.SLEEVE - SEAL COUPLER (09479)		1
-34	504-350	.SLEEVE - (V75829)		1
	S1296	.STRIP - (V88308) (BONDING)		AR
-35		DELETED		
-36	601-350SH	COUPLING - (SEE FIG. 99)		REF
-37	41A-96202-48	DUCT ASSY - (SEE SECTION 3)		REF
-38	K41A-60018-16 *	LINE ASSY - FUS STA 260-264 PRESS DISTR (SEE FIG. 97)		REF
-39	41A-98208-4	DUCT ASSY - (SEE FIG. 99)		REF
-40	41A-95202-2	DUCT ASSY - (SEE FIG. 96)		REF
		-OOO-		
	*	IAW C-12-114-000/CD-031		

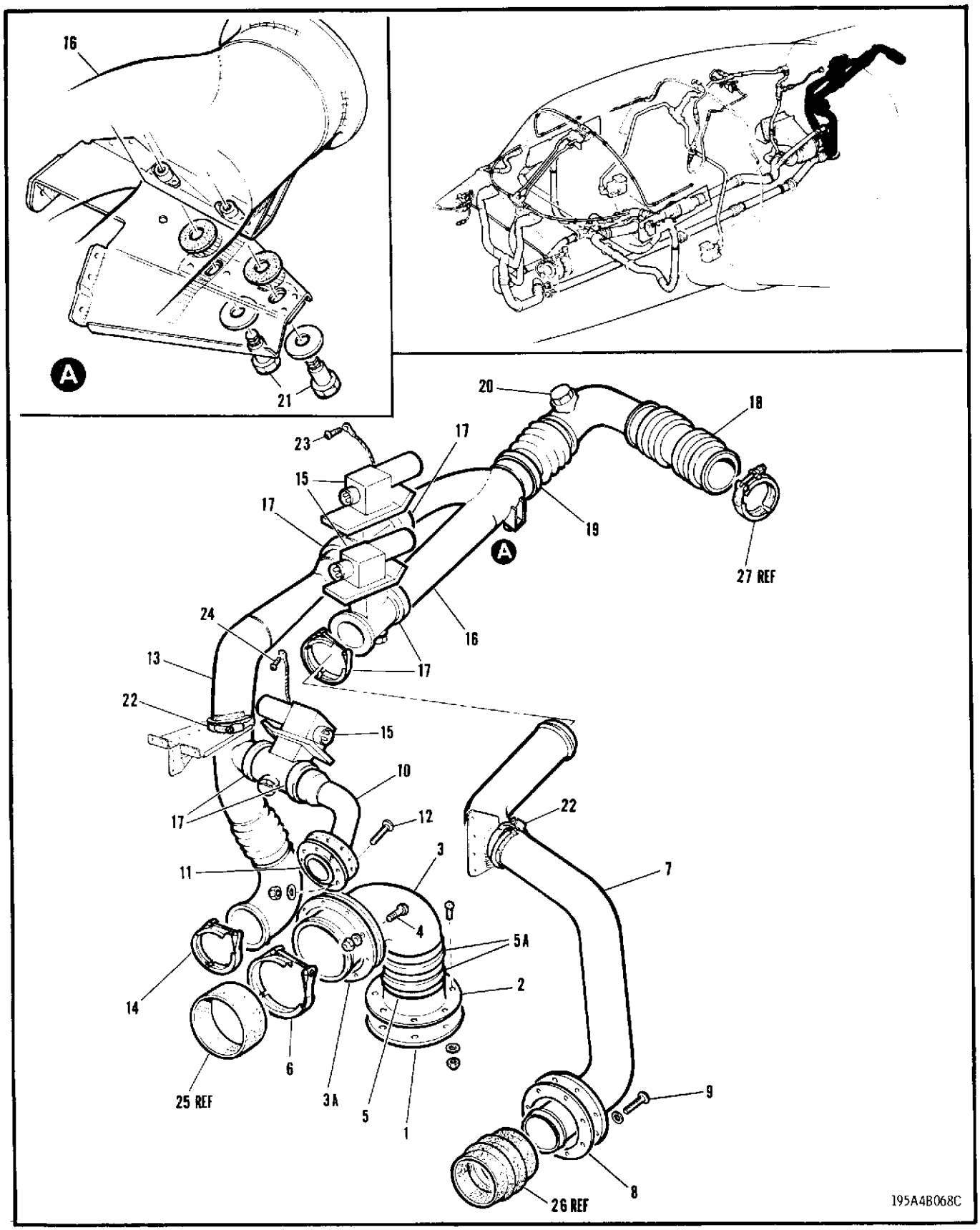

FIGURE 99 ENGINE TO FIREWALL BLEED AIR SYSTEM

FIGURE AND INDEX NUMBER	GROUP	HEAT & VENT & PRESSURIZAT	EFFEC-TIVITY	UNITS PER ASSY
	MAJOR ASSEMBLY	ENGINE TO RIREWALL BLEED AIR SYSTEM		
	PART NUMBER	1 2 3 4 5 6 7 NOMENCLATURE		
99 -	41A-42000-7	BLEED AIR SYS INSTL - ENGINE TO FIREWALL (SEE FIG. 93)		NP
- 1	41A-96201-18	.RING - INSULATION		1
- 2	41A-96201-4	.DUCT ASSY - EXHAUST FAN (RIVETED)		1
- 3	41A-96201-2	.DUCT ASSY - EXHAUST FAN		1
- 3A	41A-96201-16	.GASKET		1
- 4	MS35207-264	.SCREW		10
	AN960-10L	.WASHER		10
	MS21042L3	.NUT		6
- 5	710043-350-13	.SLEEVE - (V70628)		1
- 5A	823-17	.CLAMP - (V75829)		2
- 6	601-350SH	.COUPLING - (V75829)		1
- 7	41A-98210	.DUCT ASSY		1
R - 8	11008-7240	.GASKET		1
- 9	MS35207-264	.SCREW		8
	AN960-10L	.WASHER		8
-10	41A-98208-4	.DUCT ASSY		1
-11	41A-98208-20	.GASKET		1
-12	MS35207-264	.SCREW		8
	AN960-10L	.WASHER		8
	MS21042L3	.NUT		8
-13	41A-98208-2	.DUCT ASSY		1
-14	24540-200	.COUPLING - (V75829)		1
-15	321682-1-1	.VALVE ASSY - (V08179) (SHUT OFF) (AS PER 41A-95101-2)		3
	110493-12	..PACKING - (V08179)		1
-16	41A-98209	.DUCT ASSY		1
	24096-200C	.GASKET - (V75829)		6
-17	18276-200	.COUPLING - (V75829)		6
-18	41A-98206	.DUCT ASSY - FLEXIBLE ELBOW		1
	24346-250C	.GASKET - (V75829)		1
-19	18276-250	.COUPLING - (V75829)		1
	S1246K41-38-40	.WASHER - (V88308)		1
-20	41A-98213	.PLUG		1
-21	S1384-4A4	.BOLT - (V88308)		2
	S1246-16-24-63	.WASHER - (V88308)		2
	S1246T16-24-63	.WASHER - (V88308)		2
-22	AN737TW74-91	.CLAMP		2
	41A-42000-201	.PACKING		2
	NO NUMBER	.JUMPER ASSY		1
-23	MS35206-247	.SCREW		1
	MS35335-31	.WASHER		1
	AN960-8L	.WASHER		2
	MS35338-42	.WASHER		2
	AN340-8	.NUT		2
	NO NUMBER	.JUMPER ASSY		1
-24	MS35207-265	.SCREW		1
	MS35335-32	.LOCK WASHER		1
	AN960-10L	.WASHER		2
	MS35338-43	.WASHER		2
	AN345-10	.NUT		2
-25	504-350	SLEEVE - (SEE FIG. 98)		REF
-26	712329-2-14	HOSE - (SEE FIG. 95)		REF
-27	18276-250	CLAMP - (SEE SECTION 5)		REF

-OOO-

SECTION 10

ANTI ICING SYSTEMS

TABLE OF CONTENTS

FIGURE	TITLE	PAGE
100	WINDSHIELD & CANOPY DEMIST SYSTEMS	10-02
100A	ENGINE ICE DETECTOR	10-04

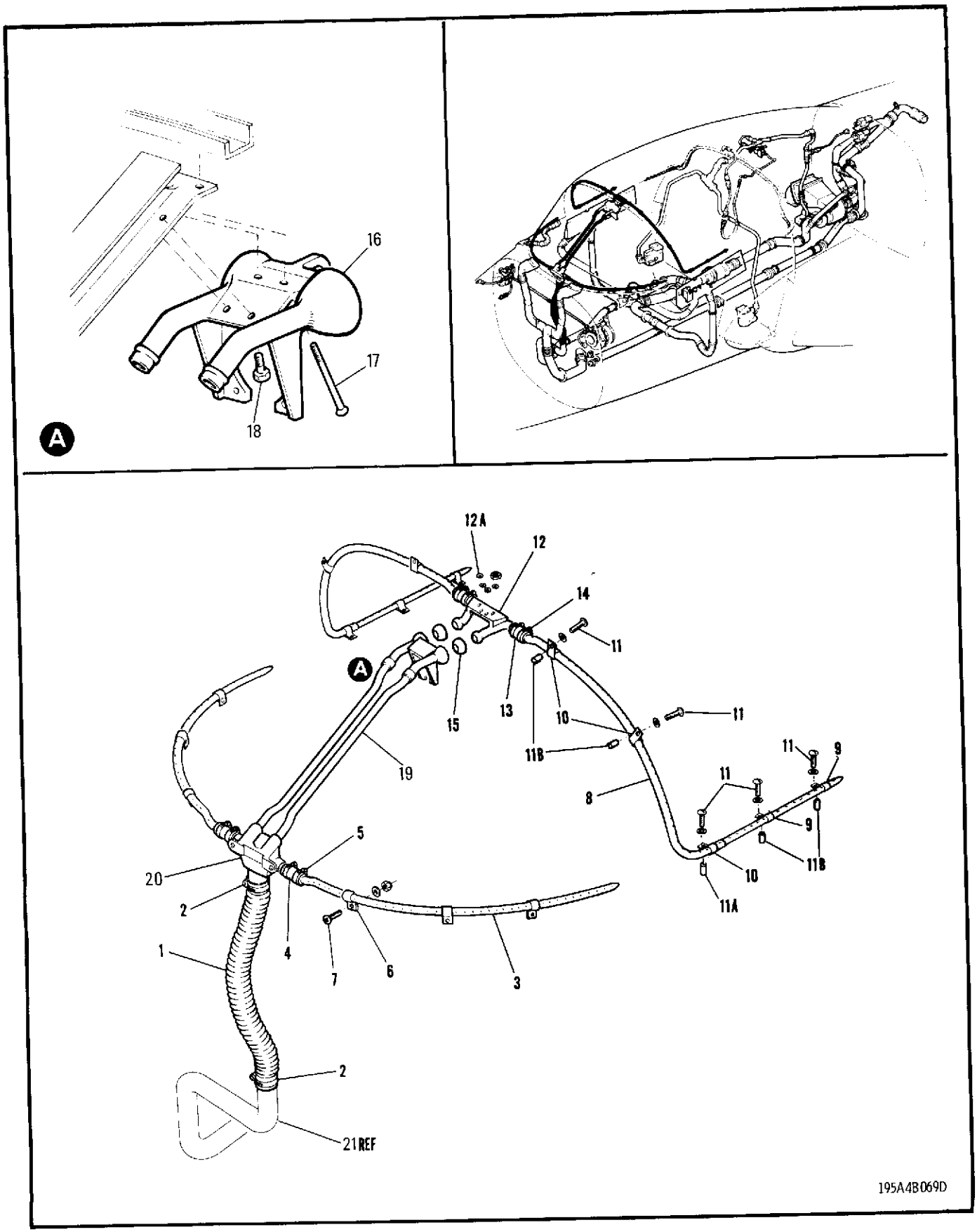

FIGURE 100 WINDSHIELD & CANOPY DEMIST SYSTEMS

FIGURE AND INDEX NUMBER	GROUP: ANTI ICING SYSTEM MAJOR ASSEMBLY: WINDSHIELD & CANOPY DEMIST SYSTEMS PART NUMBER	1 2 3 4 5 6 7 NOMENCLATURE	EFFEC-TIVITY	UNITS PER ASSY
100 -	41A-42000-2	DEMIST SYS INSTL - WINDSHIELD (SEE SECTION 9)		NP
- 1	3-1664-12-86-6	.HOSE - (V70628) (FLEXIBLE)		1
- 2	AN737TW56-66	.CLAMP		2
- 3	41A-42006-800	.TUBE - WINDSHIELD DEMIST HORIZONTAL LH		1
	41A-42006-801	.TUBE - WINDSHIELD DEMIST HORIZONTAL RH		1
- 4	S1286-5-10	.HOSE - (V88308)		2
- 5	AN737TW22	.CLAMP		4
- 6	AN742D8	.CLAMP		6
R - 7	MS35207-264	.SCREW		6
	AN960PD10L	.WASHER		6
	MS21042L3	.NUT		6
	7000	.TAPE - (V36790)		AR
	41A-42000-3	DEMIST SYS INSTL - CANOPY (SEE SECTION 9)		NP
- 8	41A-42007-800	.TUBE ASSY - DEMIST LH		1
	41A-42007-801	.TUBE ASSY - DEMIST RH		1
- 9	AN742D8	.CLAMP		4
-10	AN742D10	.CLAMP		6
-11	AN520PB10R12	.SCREW		10
-11A	NAS43DD3-20	..SPACER		2
-11B	NAS43DD3-12	..SPACER		8
	AN960PD10L	.WASHER		10
-12	41A-42002-2	.INTERCONNECT - WINDSHIELD DEMIST MALE		1
	AN960PD10	.WASHER		2
-12A	S1236-10	.WASHER - (V88308)		80
-13	S1286-6-10	.HOSE - (V88308)		2
-14	AN737TW26	.CLAMP		4
-15	41A-95207	.SEAL		2
	41A-35006	WINDSHIELD STRUCTURE - COCKPIT (SEE SECTION 3)		REF
-16	41A-42003	.INTERCONNECT - WINDSHIELD DEMIST FEMALE		1
-17	NAS560CK3P27	.SCREW		2
-18	NAS501-3-6	.BOLT		2
	AN960PD10	.WASHER		2
	MS21043-3	.NUT		2
-19	41A-42004-800	.TUBE - WINDSHIELD DEMIST VERTICAL LH		1
	41A-42004-801	.TUBE - WINDSHIELD DEMIST VERTICAL RH		1
-20	41A-42001	.MANIFOLD - WINDSHIELD DEMIST		1
-21	41A-95203	DUCT ASSY - (SEE SECTION 9)		

-OOO-

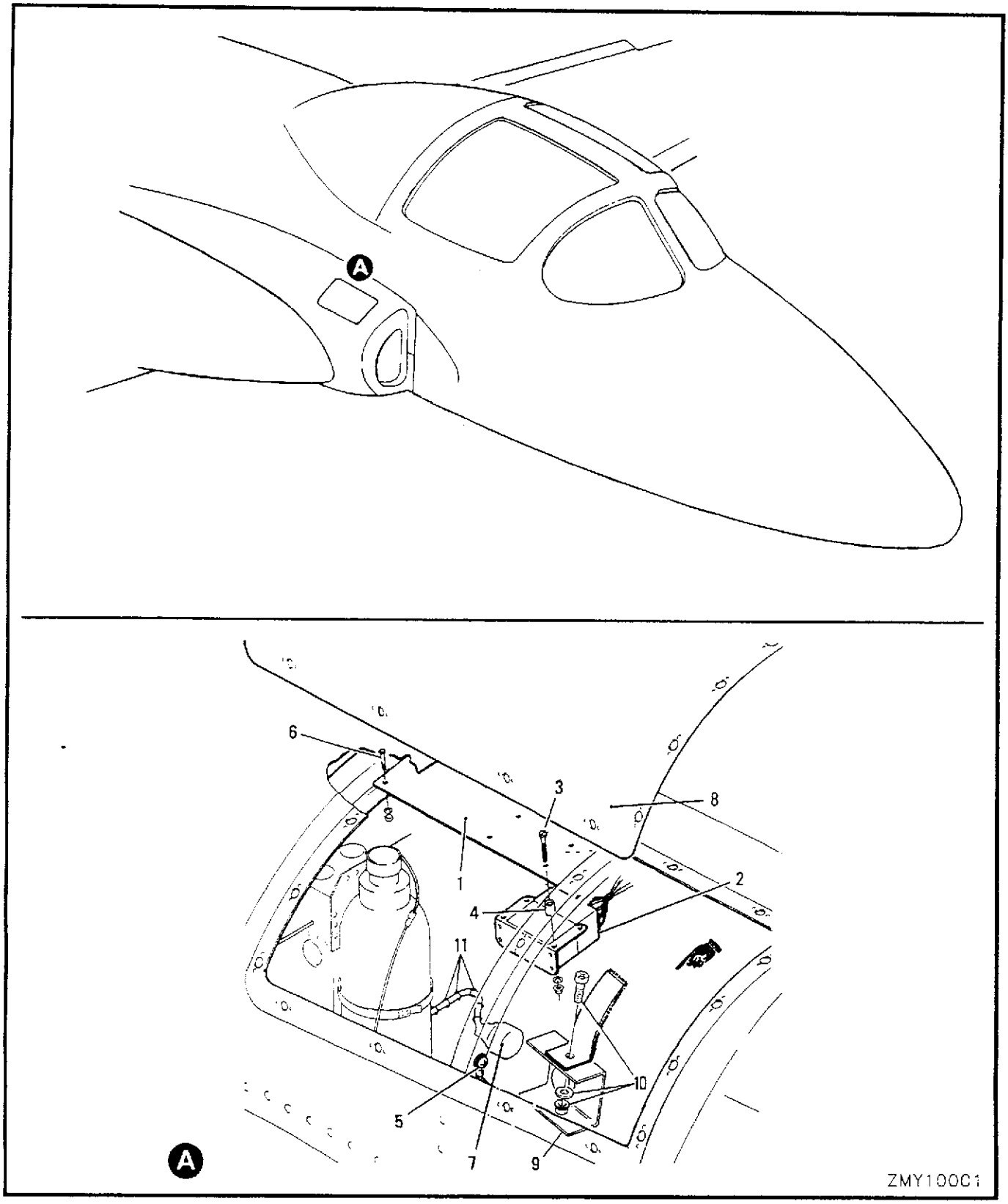

FIGURE 100A ENGINE ICE DETECTOR

FIGURE AND INDEX NUMBER	GROUP	ANTI ICING SYSTEM	EFFEC-TIVITY	UNITS PER ASSY
	MAJOR ASSEMBLY	ENGINE ICE DETECTOR		
	PART NUMBER	1 2 3 4 5 6 7 NOMENCLATURE		
100A -	41A-35166-3	DUCT ASSY - ENGINE AIR INTAKE RH (I) (MODIFIED PER C-12-114-000/CF-369) (SEE SECTION 3)		REF
- 1	NO NUMBER	.PLATE - MOUNTING		1
- 2	MS24149D1	.RELAY (K1WC)		1
R - 3	MS35206-247	.SCREW		4
- 4	NAS43DD3-19	.SPACER		4
	AN960D8L	.WASHER		4
	MS21042L08	.NUT		4
- 5	AN525-10R8	.SCREW - (GROUNDING)		1
- 6	AN3-3A	.BOLT		4
	AN960C10	.WASHER		4
	NAS679A3W	.NUT		4
	41A-57200	HARNESS ASSY		NP
- 7	MS3106R14S2SX	.PLUG - (P1WC)		1
- 8	41A-35120-69	DOOR - ACCESS DUCT FAIRING (I) (SEE SECTION 3)		REF
	NW4528468-1 *	PLUG INSTL - ICE DETECTOR AIR INTAKE DUCT		NP
- 9	NW4528471-1 *	.BRACKET ASSY		1
-10	NAS623-4-3 *	.SCREW		2
	AN960C416L *	.WASHER		2
	MS21060L4K *	.NUT		2
-11	MS3367-5-9 *	TYE WRAP		10
	*	IAW C-12-142-000/CF-514		

-OOO-

SECTION 11

OXYGEN SYSTEM

TABLE OF CONTENTS

FIGURE	TITLE	PAGE
101	COMPLETE OXYGEN SYSTEM	11-02

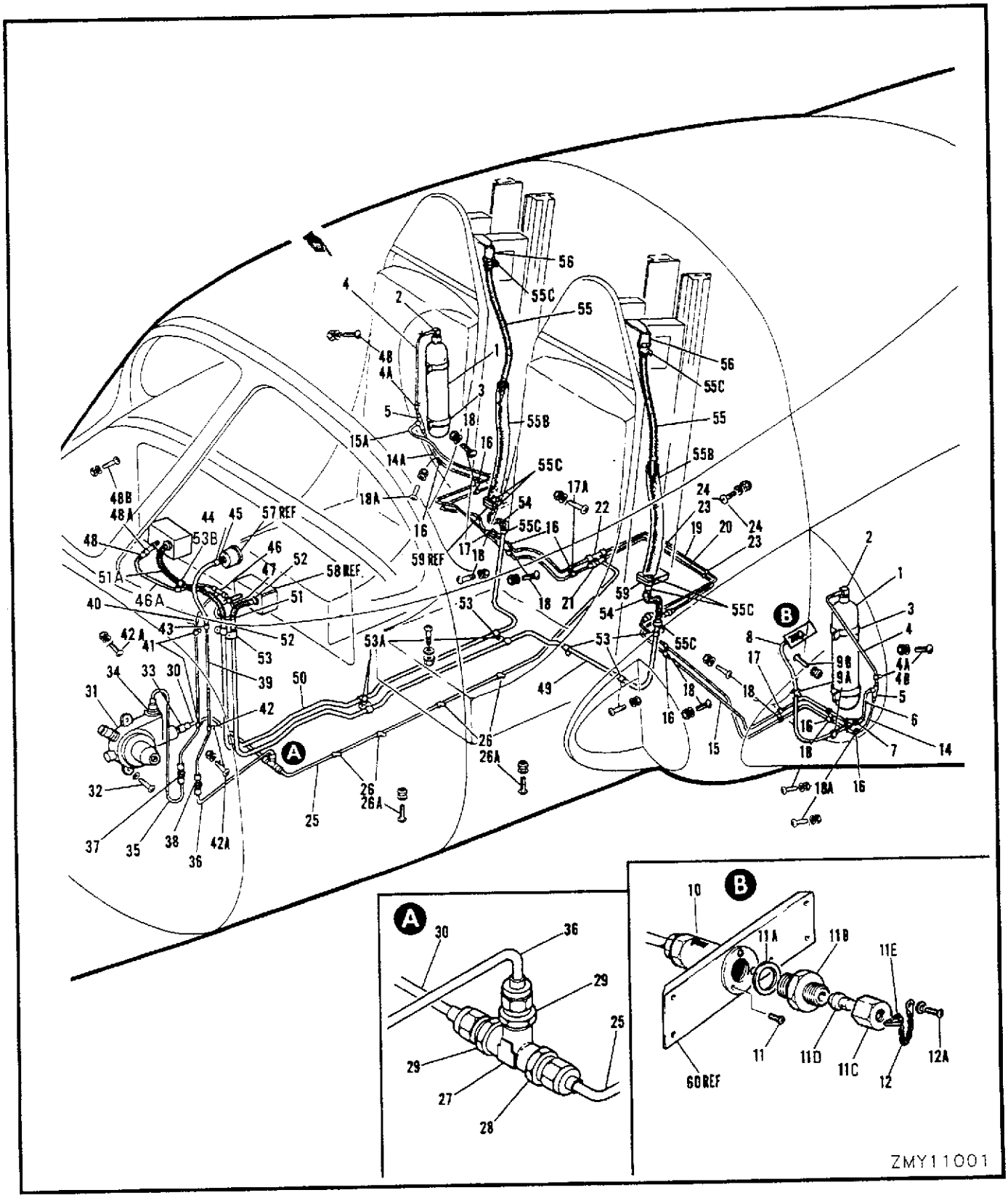

FIGURE 101 COMPLETE OXYGEN SYSTEM

FIGURE AND INDEX NUMBER	GROUP		OXYGEN SYSTEM	EFFEC-TIVITY	UNITS PER ASSY
	MAJOR ASSEMBLY		COMPLETE OXYGEN SYSTEM		
	PART NUMBER		1 2 3 4 5 6 7 NOMENCLATURE		
101 -	41A-49051		OXYGEN SYS INSTL - (SEE SECTION 3)		NP
	41A-49054		.BOTTLE INSTL - OXYGEN LH		NP
	41A-49054-1		.BOTTLE INSTL - OXYGEN RH		NP
	41A-49054-66		..CYLINDER & VALVE ASSY - OXYGEN		1
- 1	960870		...CYLINDER - (V73168) (OXYGEN)		1
- 2	MS22012-2		...VALVE ASSY - OXYGEN		1
- 3	361-625-525S		..CLAMP - (V75829)		2
- 4	AT3020-1	**	.HOSE ASSY - OXYGEN CYLINDER TO VALVE		2
R	MS28775-008	**	.PACKING		1
- 4A	MS21919WDG3	**	.CLAMP		2
- 4B	MS51957-128	**	.SCREW		2
	WWT700-6	**	.SPACER		2
- 5	AN6015-2		.VALVE ASSY - (OXYGEN CHECK)		2
- 6	41A-49052-6		.LINE ASSY - OXYGEN VALVE TO TEE LH		1
- 7	AN795-3		.TEE		1
- 8	NW4525001-24		.LINE - TEE TO FILLER VALVE OXYGEN (V35598)		1
	AN800-3		.CONE - (SOLDERED TO LINE)		2
	AN805-3		.NUT		2
- 9	AN742-3C		.CLAMP		2
	AN960PD10		.WASHER		4
	MS21042L3		.NUT		2
- 9A	MS35207-263		.SCREW		2
-10	AER35866-502		.VALVE ASSY - (V07213) FILLER		1
-11	MS35207-265	*	.SCREW		3
	C66A00218		.ADAPTOR KIT - OXYGEN FILLER VALVE		1
-11A	C66A00219-1		..WASHER		1
-11B	C66C00232-1		..ADAPTOR		1
	C66B00238-1		.CAP ASSY - PRESSURE SEAL		1
-11C	C66B00237-1		..NUT - COUPLING		1
-11D	C66A00235-1		..INSERT		1
-11E	C66A00236-1		..RETAINER		1
-12	41A-49051-32		.CHAIN - SAFETY (COMMERCIAL O GAUGE 4 IN.)		1
-12A	MS35206-230		.SCREW		1
	AN960PD6		.WASHER		2
	MS21042L06		.NUT		1
-13			DELETED		
-14	41A-49052-4		.LINE ASSY - OXYGEN VALVETO KEEL LH		1
-14A	41A-49052-5		.LINE ASSY - OXYGEN VALVE TO KEEL RH		1
-15	41A-49052-10		.LINE ASSY - TEE TO KEEL OXYGEN LH		1
-15A	41A-49052-8		.LINE ASSY - OXYGEN VALVETO KEEL RH		1
-16	316-3-6		.CLIP - (V00502)		12
-17	316-5-6		.CLIP - (V00502)		3
-17A	MS35206-248		.SCREW		1
-18	MS35206-245		.SCREW		6
	AN960D8L		.WASHER		7
	MS21042L08		.NUT		5
	MS21042L08		.NUT		2
-18A	MS35206-245		.SCREW		2
	AN960D8L		.WASHER		2
	MS21042L08		.NUT		2
-19	41A-49052-20		.LINE ASSY - LH TO RH ACROSS KEEL OXYGEN		1
-20	41A-49052-22		.LINE ASSY - LH TO RH ACROSS KEEL OXYGEN		1
-21			DELETED		
-22	AN795-3		.TEE		1
		*	IAW C-12-114-000/CF-479		
		**	IAW C-12-114-000/CF-508		

	FIGURE AND INDEX NUMBER	GROUP	OXYGEN SYSTEM	EFFEC-TIVITY	UNITS PER ASSY
		MAJOR ASSEMBLY	COMPLETE OXYGEN SYSTEM		
		PART NUMBER	1 2 3 4 5 6 7 NOMENCLATURE		
	101 -23	316-3-6	.CLIP - (V00502)		4
R	-24	MS35206-248	.SCREW		2
		AN960D8L	.WASHER		2
		MS21042L08	.NUT		2
	-25	41A-49052-26	.LINE ASSY - TEE FUS STA 217 TO TEE FUS STA 166 OXYGEN		1
	-26	316-3-6	.CLIP - (V00502)		4
R	-26A	MS35206-245	.SCREW		4
		AN960D8L	.WASHER		4
		MS21042L08	.NUT		4
	-27	AN917-1	.TEE		1
	-28	AN780-3	.NIPPLE		1
	-29	AN816-3B	.NIPPLE		2
	-30	41A-49052-36	.LINE ASSY - TEE FUS STA 166 TO REDUCING VALVE OXYGEN		1
	-31	27660-3	.VALVE ASSY - (SCO) (OXYGEN PRESSURE REDUCTION) (FOR BRKDN SEE C-22-227-000/MS-000)		1
R	-32	MS35207-264	.SCREW		2
		AN960D10L	.WASHER		2
	-33	S1371-3-5C	.REDUCER - (V88308)		1
	-34	MS24392D5	.UNION		1
		S1442-3-5	.O-RING - (V88308)		2
	-35	41A-49052-30	.LINE ASSY - REGULATOR TO FLOOR OXYGEN		1
	-36	41A-49052-28	.LINE ASSY - TEE TO FLOOR OXYGEN		1
	-37	AN832-5D	.UNION		1
		AN924-5D	.NUT		1
	-38	AN832-3	.UNION		1
		AN924-3D	.NUT		1
	-39	41A-49052-32	.LINE ASSY - FLOOR TO PRESS. GAUGE OXYGEN		1
	-40	41A-49052-34	.LINE ASSY - FLOOR TO REGULATOR OXYGEN		1
	-41	316-5-6	.CLIP - (V00502)		2
	-42	316-3-6	.CLIP - (V00502)		1
R	-42A	MS35206-246	.SCREW		3
		AN960D8L	.WASHER		3
		MS21042L08	.NUT		3
	-43	S1371-3-5C	.REDUCER - (V88308)		1
	-44	AE1010119E0140	.HOSE - (V69705)		1
	-45	AN816-5D	.NIPPLE		1
	-46	AN824-5D	.TEE		1
	-46A	AE3663569F0250 **	.HOSE ASSY - (V69705) BREATHING RH		1
	-47	AE3663242F0140 **	.HOSE ASSY - BREATHING LH		1
		1/4	.POLY SPIRAP - (V09482)		2
	-48	10011-7	.QUICK DISCONNECT ASSY - (V12282)		2
			OR		
		10011-6A	.QUICK DISCONNECT ASSY - (V12282)		
		NO NUMBER	.SLEEVE - QUICK DISC PROTECTION (IAW C-12-114-000/CF-371)		2
	-48A	AN742D8 *	.CLAMP		2
	-48B	MS27039-1-07 *	.SCREW		2
		AN960-10L *	.WASHER		2
		MS21042L3 *	.NUT		2
		*	IAW EO 05-195A-5/56		
		**	IAW C-12-114-000/CD-031		

FIGURE AND INDEX NUMBER	GROUP	OXYGEN SYSTEM	EFFEC-TIVITY	UNITS PER ASSY
	MAJOR ASSEMBLY	COMPLETE OXYGEN SYSTEM		
	PART NUMBER	1 2 3 4 5 6 7 NOMENCLATURE		
101 -49	41A-49055	.LINE - REGULATOR TO DISCONNECT LH		1
-50	41A-49056-2	.LINE - REGULATOR TO DISCONNECT RH		1
-51	AN6003T12A	.TUBE ASSY - (LH) INLET		1
-51A	MS22055H24 **	.TUBE ASSY - (RH) INLET		1
-52	AN737TW46	.CLAMP		4
-53	316-14-8	.CLIP - (V00502)		9
R -53A	MS35207-263	.SCREW		3
R	MS35207-265	.SCREW		5
	AN960D10L	.WASHER		5
	MS21042L3	.NUT		5
-53B	MS21919WDG8 **	.CLAMP		2
	MS21919WDG20 **	.CLAMP		1
	MS35207-264 **	.SCREW		1
	AN960PD10 **	.WASHER		1
	MS21042L3 **	.NUT		1
-54	AN6003T12A	.TUBE ASSY		2
-55	S1451-24	.HOSE ASSY - (V88308)		2
	MS22055B24	..HOSE ASSY		1
	MS22055H24	...HOSE		1
	MS22058-2	...CONNECTOR TYPE 2		1
-55A		DELETED		
-55B	S1453	..SLEEVE - (V88308)		1
-55C	AN737TW46	.CLAMP		8
-56	AE409-5A	.PLUG - OXYGEN STOWAGE (V69705)		AR
-57	AN6011-18	GAUGE - OXYGEN PRESSURE (SEE SECTION 14)		REF
-58	19325-2	REGULATOR - OXYGEN DILUTER DEMAND (SEE SECTION 14)		REF
-59	41A-40553	DISCONNECT ASSY - SEAT (SECTION 16)		REF
-60	NO NUMBER *	BRACKET - OXYGEN CHARGING VALVE SUPPORT (SEE SECTION 3)		REF
		-OOO-		
	*	IAW C-12-114-000/CF-252		
	**	IAW C-12-114-000/CD-031		

SECTION 12

ELECTRICAL EQUIPMENT

TABLE OF CONTENTS

FIGURE	TITLE	PAGE
102	ELECTRICAL EQUIPMENT	12-02
103 (1 of 2)	NOSE COMPARTMENT ELECTRICAL EQUIPMENT	12-06
103 (2 of 2)	NOSE COMPARTMENT ELECTRICAL EQUIPMENT	12-06B
104	STORAGE BATTERIES	12-10
105 (1 OF 2)	MAIN DISTRIBUTION & RELAY PANELS	12-12
105 (2 OF 2)	MAIN DISTRIBUTION & RELAY PANELS	12-12B
106 (1 OF 2)	NOSE COMPARTMENT ELECTRICAL HARNESS	12-16
106 (2 of 2)	NOSE COMPARTMENT ELECTRICAL HARNESS	12-18
106A	FUSELAGE TROUGH ELECTRICAL HARNESS ATTACHMENTS	12-22
107	COCKPIT ELECTRICAL EQUIPMENT	12-26
108	FORWARD COCKPIT ELECTRICAL EQUIPMENT	12-30
109	LH CONSOLE ELECTRICAL EQUIPMENT	12-34
109A	RH CONSOLE ELECTRICAL EQUIPMENT	12-38
110	CENTRE CONSOLE ELECTRICAL EQUIPMENT	12-42
111	CENTRE CONSOLE ELECTRICAL EQUIPMENT	12-46
112 (1 of 2)	CENTRE CONSOLE CIRCUIT BREAKER PANEL	12-50
112 (2 of 2)	CENTRE CONSOLE CIRCUIT BREAKER PANEL	12-50B
113	INSTRUMENT PANEL SHROUD & LIGHTING EQUIPMENT	12-52
114	COCKPIT ELECTRICAL HARNESS	12-56
114A	COCKPIT ELECTRICAL HARNESS	12-62
115	CENTRE FUSELAGE ELECTRICAL EQUIPMENT	12-66
116	DELETED	12-70
117 (1 of 2)	WING FILLET ELECTRICAL HARNESS	12-72
117 (2 of 2)	WING FILLET ELECTRICAL HARNESS	12-74
118 (1 of 2)	POWER PLANT ELECTRICAL EQUIPMENT	12-76
118 (2 of 2)	POWER PLANT ELECTRICAL EQUIPMENT	12-78
119	WING ELECTRICAL EQUIPMENT	12-82
120	WING ELECTRICAL HARNESS	12-86
121	REAR FUSELAGE ELECTRICAL EQUIPMENT	12-90

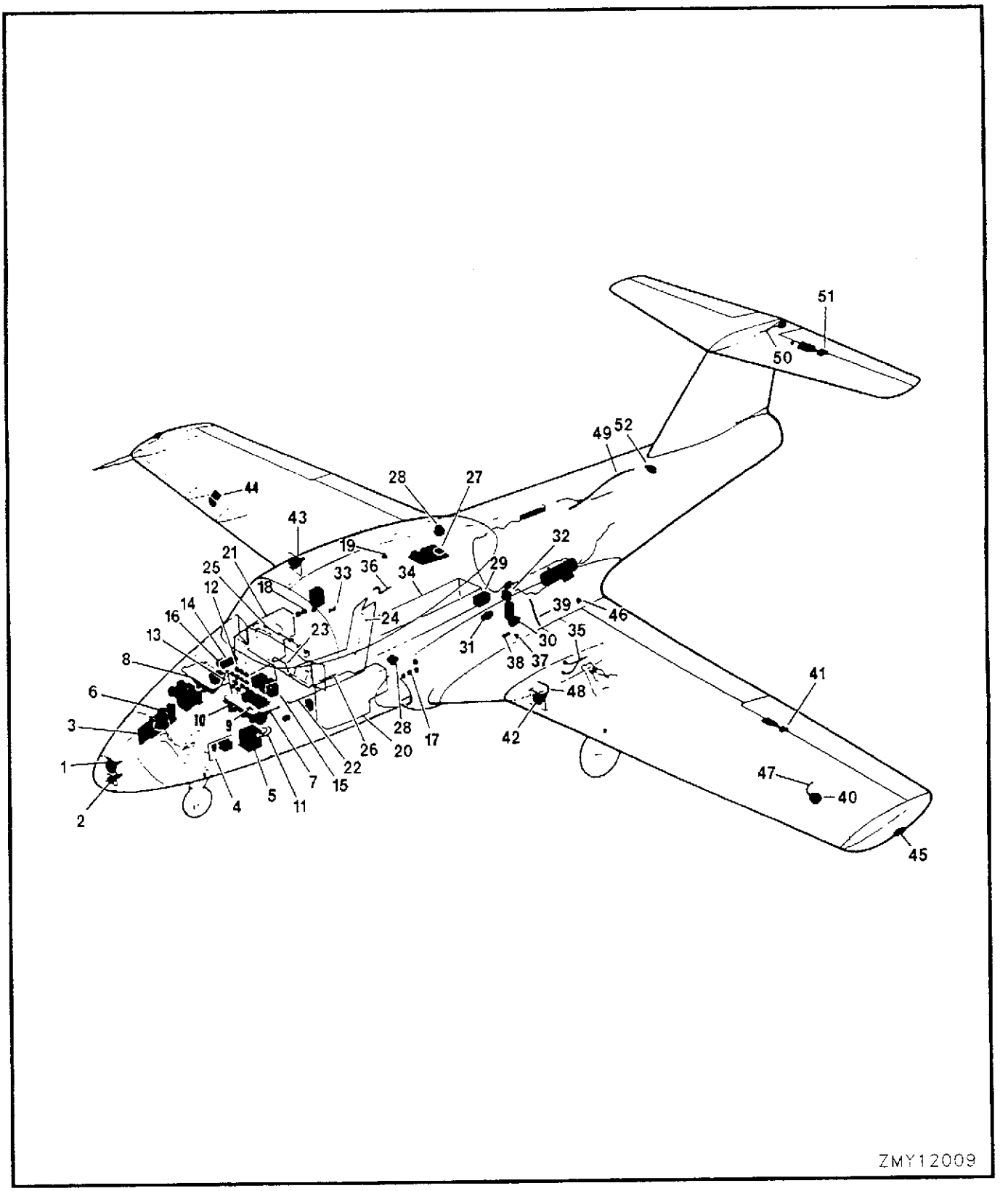

FIGURE 102 ELECTRICAL SYSTEM

FIGURE AND INDEX NUMBER	GROUP	ELECTRICAL EQUIPMENT	EFFEC-TIVITY	UNITS PER ASSY
	MAJOR ASSEMBLY	ELECTRICAL SYSTEM		
	PART NUMBER	1 2 3 4 5 6 7 NOMENCLATURE		
102 - 1	4571	LAMP ASSY - (TAXI LIGHT) (SEE FIG. 103)		REF
- 2	MS25219-4	LIGHT ASSY - (GROUND OBSERVER) (SEE FIG. 106)		REF
- 3	41A-42114	PANEL INSTL - MAIN DISTRIBUTION (RH) (MOD) (SEE FIG. 105)		REF
- 4	41A-42112-82	PANEL INSTL - RELAY (LH) (SEE FIG. 105)		REF
- 5	41A-51000	BATTERY INSTL - (SEE FIG. 104)		REF
- 6	673447	GYRO - CONTROL DIRECTIONAL (SEE SECTION 14)		REF
- 7	32B180-1B	INVERTER - (V07213) (ROTARY TYPE MS17406-1) (SEE FIG. 103)		REF
- 8	32B52-12A	INVERTER - (V07213) (ROTARY TYPE MS25095-1) (SEE FIG. 103)		REF
- 9	S1339-1-6	TERMINAL BLOCK ASSY - (TB14 & 46) (SEE FIG. 103)		REF
-10	ST106N	TRANSMITTER - HYDRAULIC PRESSURE (SEE SECTION 14)		REF
-11	41A-43013	HARNESS INSTL - NOSE COMPARTMENT ELECTRICAL (SEE FIG. 106)		REF
-12	SPB20-16PSW003	RECEPTACLE - (V07213) (DC J10) (SEE FIG. 107)		REF
-13	41A-42123	TUBE ASSY - NOSE ELEC SHELF (SUPPORT) (SEE FIG. 103)		REF
-14	124623-1	GYRO - VERTICAL TYPE MD-1 (LES) (SEE SECTION 14)		REF
-15	45958-10	CONTROL - (V08179) (AIR TEMPERATURE) (SEE FIG. 108)		REF
-16	138474-01-01	GYRO - RATE SWITCHING TYPE MC-1 (V31435) (SEE SECTION 14)		REF
-17	SPB22-21PS003	RECEPTACLE - (V07213) (J36) (SEE FIG. 107)		REF
-18	SPB20-16PS003	RECEPTACLE - (V07213) (J44) (SEE FIG. 107)		REF
-19	SPB16-8PS003	RECEPTACLE - (V07213) (J30) (SEE FIG. 107)		REF
-20	41A-42204-2	PANEL ASSY - LH CONSOLE (I) (SEE FIG. 109)		REF
-21	41A-42204-140	PANEL ASSY - RH CONSOLE (I) (SEE FIG. 109A)		REF
-22	41A-52202	CONSOLE STRUCTURE INSTL - CENTRE (SEE FIG. 110)		REF
-23	41A-51210	PANEL ASSY - ENGINE AND ELECTRICS (SEE FIG. 111)		REF
-24	41A-42201-2	PANEL - (SIDE SUPPORT LH) (SEE FIG. 112)		REF
-25	41A-52011-800	SHROUD & LIGHTING EQUIP. INSTL - INSTRUMENT PANEL (SEE FIG. 113)		REF
-26	41A-57128-800	HARNESS ASSY - P13 TO CENTRE CONSOLE (SEE FIG. 114)		REF
-27	41A-42152-32	PANEL ASSY - RELAY (SEE FIG. 115)		REF
-28	G8400A8-24	LIGHT ASSY - (V72914) (ANTI COLLISION) (SEE FIG. 115)		REF
R -29	AE320-2C	SENSOR - TYPE 1 (SEE SECTION 14)		REF
-30	21SN41-105 *	SWITCH - (FUEL LOW PRESSURE) (SEE FIG. 115)		REF
-31	MS24185D1	RELAY - (K2P GROUND POWER) (SEE FIG. 115)		REF
-32	MS27433-600	RELAY - (KIP GENERATOR REVERSING CURRENT) (SEE FIG. 115)		REF
-33	C75506	SIGNAL SUMMING UNIT - (SAF) (SEE FIG. 115)		REF
-34	41A-43012	TROUGH INSTL - FUSELAGE HARNESS (CLAMPS) (SEE FIG. 106A)		REF
-35	41A-57312	HARNESS ASSY - P13G-TB33 & N63 (SEE FIG. 117)		REF
-36	41A-57316	HARNESS ASSY - P7DC & TB37 RH CENTRE TANK PROBE (SEE FIG. 117)		REF
	*	IAW C-12-114-OOO/CF-505		

FIGURE AND INDEX NUMBER	GROUP	ELECTRICAL EQUIPMENT	EFFEC-TIVITY	UNITS PER ASSY
	MAJOR ASSEMBLY	ELECTRICAL SYSTEM		
	PART NUMBER	1 2 3 4 5 6 7 NOMENCLATURE		
102 -37	AN2552-3A	RECEPTACLE - (GROUND POWER) (SEE FIG. 118)		REF
-38	41A-42129-2	RELAY ASSY - SYSTEM SHUT OFF DEICE (SEE FIG. 118)		REF
-39	244E40G180	CABLE ASSY - (FIRE DETECTOR) (SEE FIG. 118)		REF
-40	664543	FLUX VALVE - TYPE C2/C (SEE SECTION 14)		REF
-41	MS24149D1	RELAY - (AILERON TRIM TAB CONTROL) (SEE FIG. 119)		REF
-42	41A-42118	HOLDER - LANDING LAMP (LE PORT) (SEE FIG. 119)		REF
-43	41A-42118-1	HOLDER - LANDING LAMP (LE STBD) (SEE FIG. 119)		REF
R -44	C75507	LIFT TRANSDUCER - (V83326) (STBD) (SEE FIG. 119)		REF
-45	AN3033-14	LIGHT ASSY - (NAVIGATION) (PORT) (SEE FIG. 119)		REF
R -46	C75509	TRANSMITTER - (V83326) (STALL WARNING POSN) (SEE FIG. 119)		REF
-47	41A-57404	HARNESS ASSY - P40 TO FLUX VALVE (PORT) (SEE FIG. 120)		REF
-48	41A-57401	HARNESS ASSY - TB13 TO LANDING LIGHT (PORT) (SEE FIG. 120)		REF
-49	41A-57600-800	HARNESS ASSY - J70 (SEE FIG. 121)		REF
-50	41A-57802	HARNESS ASSY - TB18 TO TAIL LIGHT (SEE FIG. 121)		REF
-51	MS24149D1	RELAY - (ELEVATOR TAB) (SEE FIG. 121)		REF
-52	MS24456-1	SWITCH ASSY - (SEE FIG. 121)		REF

-000-

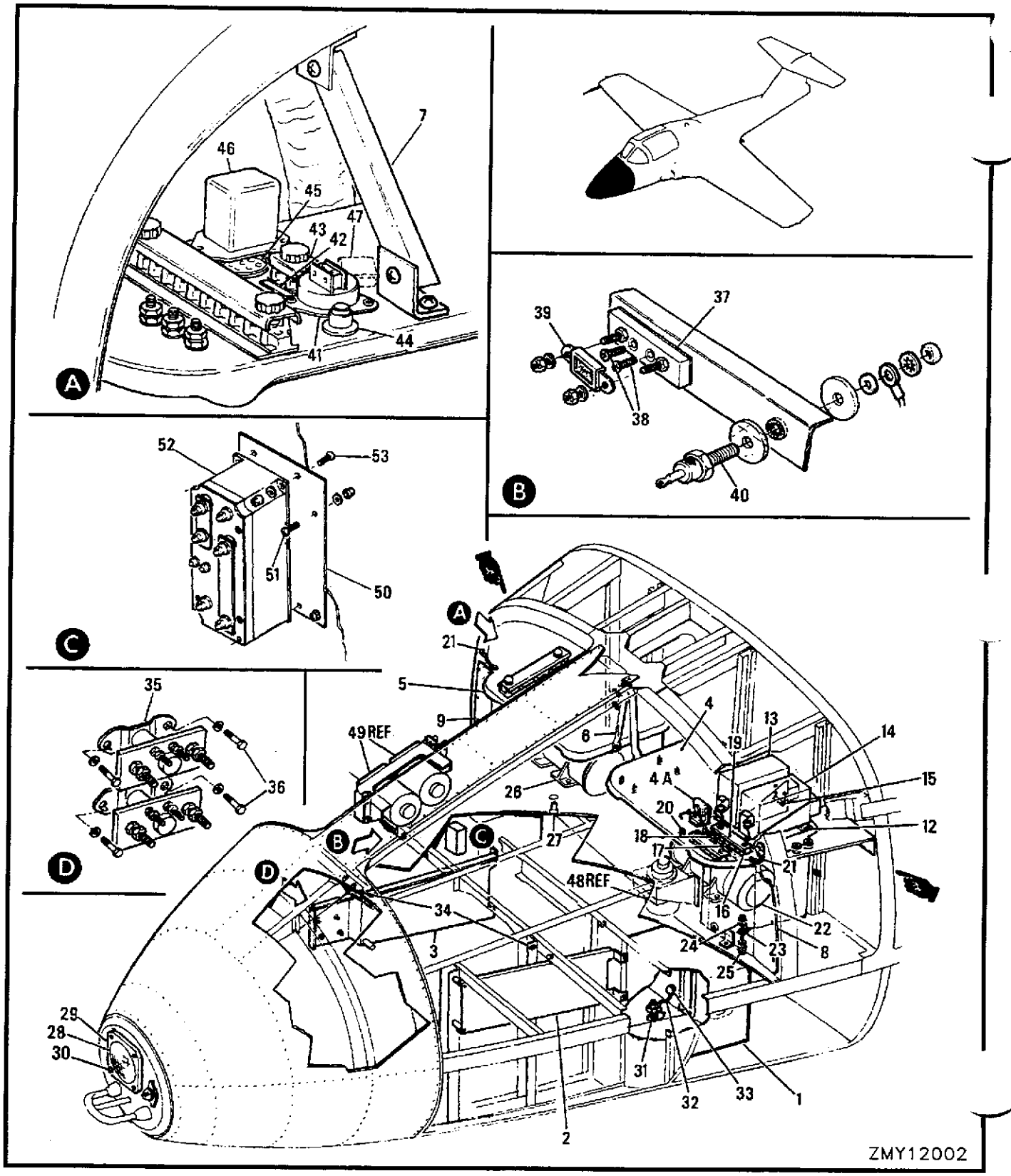

FIGURE 103 (SHEET 1) NOSE COMPARTMENT ELECTRICAL EQUIPMENT

FIGURE AND INDEX NUMBER	GROUP	ELECTRICAL EQUIPMENT	EFFEC-TIVITY	UNITS PER ASSY
	MAJOR ASSEMBLY	(SHEET 1) NOSE COMPARTMENT ELECTRICAL EQUIPMENT		
	PART NUMBER	1 2 3 4 5 6 7 NOMENCLATURE		
103-	41A-42100 *	ELECTRICAL & ELEK EQUIP INSTL - NOSE COMPT (SEE SECTION 3)		NP
- 1	41A-51000	.BATTERY INSTL - (SEE FIG. 104)		REF
- 2	41A-42112-82	.PANEL INSTL - RELAY (LH) (SEE FIG. 105)		REF
- 3	41A-42114	.PANEL INSTL - MAIN DISTRIBUTION (RH) (SEE FIG. 105)		REF
	41A-42169	.PANEL INSTL - NOSE CIRCUIT BREAKER (SEE FIG. 105)		REF
	41A-43013	.HARNESS INSTL - NOSE ELECTRICAL (SEE FIG. 106)		REF
	41A-42130-8	.SHELF ASSY - NOSE BAY EQUIPMENT LH		1
	41A-42120-32	..SHELF ASSY - NOSE EQUIPMENT BAY LH		1
- 4	41A-42120-34	...TRAY - (LH)		1
	K41A-59009-12	...LABEL - (CR1L)		1
- 4A	41A-42204-124	...BRACKET - (DIODE SPRT)		1
	41A-42120-28	...EXTRUSION		1
	MS35206-228	...SCREW		2
	AN960D6L	...WASHER		2
	MS21042L06	...NUT		2
- 5	41A-42130-4	.SHELF ASSY - NOSE BAY EQUIPMENT RH		1
- 6	41A-42123	.TUBE ASSY - NOSE ELEC SHELF (SUPPORT)		2
	NAS623-3-3	.SCREW - (SHELF & TUBE RETAINING)		8
	NAS623-3-4	.SCREW - (TUBE UPPER RETAINING)		1
	AN960PD10L	.WASHER		9
	MS21042L3	.NUT		3
- 7	41A-51223-2	.SUPPORT - (RH SHELF)		1
	MS35207-261	.SCREW		2
	AN960D10L	.WASHER		2
	MS21042L3	.SCREW		2
	41A-42131	.BAFFLE INSTL - FUS STA 140 COOLING		NP
- 8	41A-42132-18	..BAFFLE ASSY - COOLING LH		1
- 9	41A-42132-5	..BAFFLE ASSY - COOLING RH		1
	MS35207-264	..SCREW - (LH BAFFLE RETAINING)		5
	MS35207-261	..SCREW - (RH BAFFLE RETAINING)		5
	AN960D10L	..WASHER		10
	SL201-6AA	..CLIPNUT - (V97393)		2
R -10		DELETED		
R		DELETED		
R -11		DELETED		
	MS35206-243	..SCREW		8
	AN960D8L	..WASHER		8
	MS21083N08	..NUT		8
-12	41531	.BRACKET ASSY - (V80099)		1
-13	227-28-5A	.CONTROL ASSY - (V80099) (OVERHEAT DETECTION)		1
-14	377-28-2A	.CONTROL ASSY - (V80099) (FIRE DETECTION)		1
	MS35206-231	.SCREW		7
	AN960PD6L	.WASHER		7
-15	RS2A	.RESISTOR - (DAL)		1
-16	MS27212-1-6	.TERMINAL BLOCK ASSY - (V88308) (TB14 & TB46)		2
	S1307H1-6	.STRIP - (V88308)		2
	MS35206-217	.SCREW		4
	AN960D4L	.WASHER		4
	MS21083N04	.NUT		4
	MS25227-1	.STRIP - (INSULATING)		2
	MS25226-2-2	.BUS - (TB14 POST 2 & 3)		1
-17	RS2A	.RESISTOR - (DAL) (50 OHMS 1%)		1
-18	RS2A	.RESISTOR - (DAL) (1760 OHMS 1%)		1
	AN960-6	.WASHER		12
	MS21083N06	.NUT		12
	*	IAW C-12-114-000/CF-315, 325, 334, 351, 354 & CD-031		

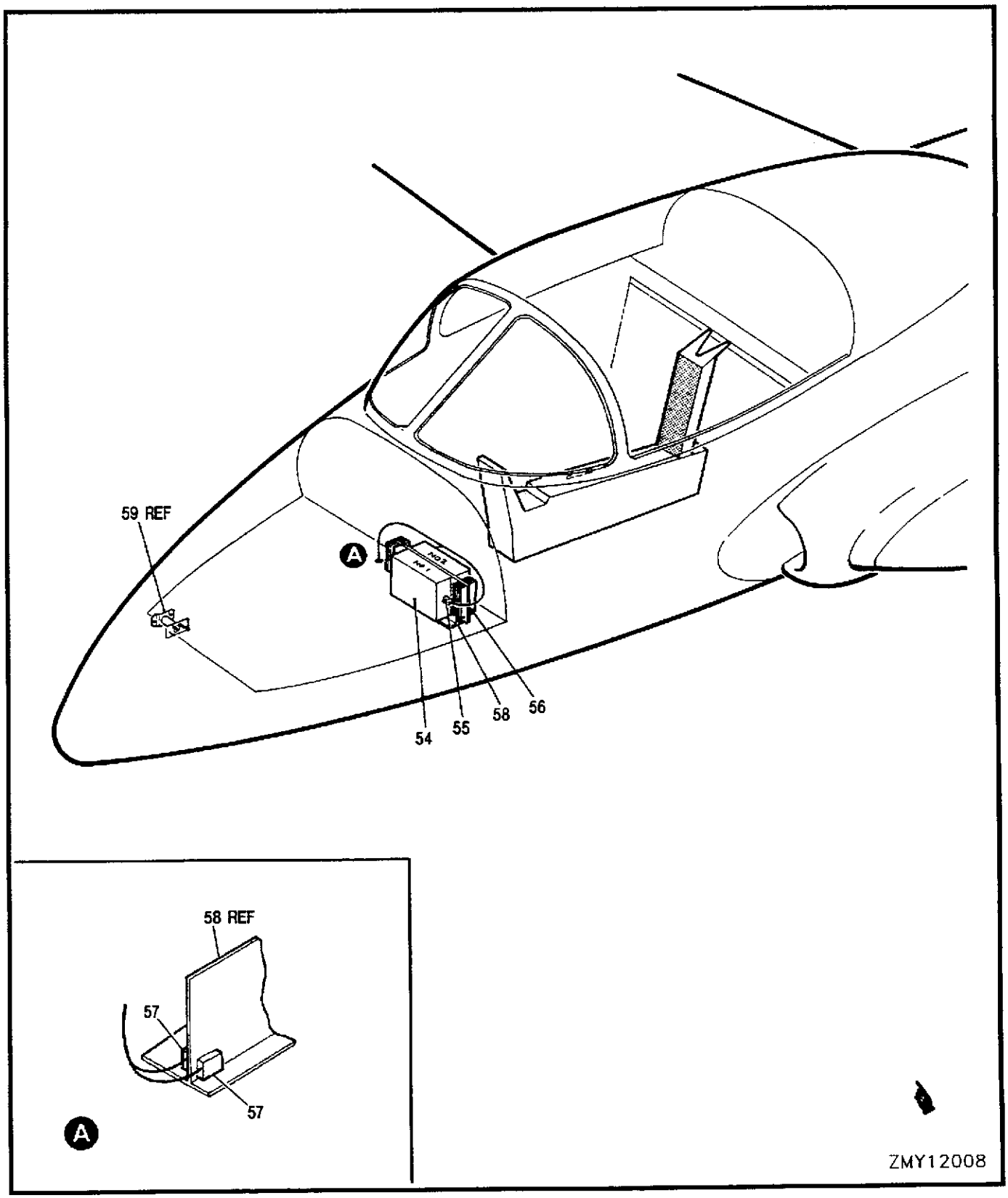

FIGURE 103 (SHEET 2) NOSE COMPARTMENT ELECTRICAL EQUIPMENT

FIGURE AND INDEX NUMBER	GROUP	ELECTRICAL EQUIPMENT	EFFEC-TIVITY	UNITS PER ASSY
	MAJOR ASSEMBLY	(SHEET 2) NOSE COMPARTMENT ELECTRICAL EQUIPMENT		
	PART NUMBER	1 2 3 4 5 6 7 NOMENCLATURE		
103 -19	MS18029-1S6	.SHIELD ASSY		2
-20	MS35207-265	.SCREW - (N2, N3, N20, N23, N24, N27, N30, N40, N67, N73 & N83 GROUND STUD)		12
	MS35335-32	.LOCK WASHER		12
	AN960-10L	.WASHER		24
	MS35338-39	.LOCK WASHER		24
	MS35650-302	.NUT		24
-21	MS25083-2BB4	.JUMPER ASSY		2
	MS35207-265	.SCREW		4
	MS35335-32	.LOCK WASHER		2
	AN960-10L	.WASHER		4
	MS35338-39	.LOCK WASHER		4
	MS35650-302	.NUT		4
-22	32B180-1B	.INVERTER - (V07213) (ROTARY TYPE MS17406-1) FOR BRKDN SEE C-17-319-000/MZ-000		1
	1537168	.PLATE - MOUNTING FOR BRKDN OF MOUNTING PLATE WITH SHOCK MOUNTS AND HARDWARE, REFER TO C-12-114-000/CS-035		1
-23	MS25080-5	.TERMINAL STUD - (STATIC INVERTER MOUNTING) OR		4
	41A-42100-146	.STUD - SPECIAL		4
-24	MS35335-35	.LOCK WASHER		4
-25	MS35338-42	.LOCK WASHER		4
	AN960PD616	.WASHER		4
	MS21042L6	.NUT		8
-26	32B52-12A	.INVERTER - (V07213) (ROTARY TYPE MS25095-1) FOR BRKDN SEE C-17-297-000/MS-000		1
-27	MS24694S194	.SCREW		4
	M2025103	.WASHER		4
	MS21042L6	.NUT		4
-28	4571	.LAMP - (TAXI LIGHT) (V08806)		1
-29	41A-42110-4	.RING - (LAMP RETAINING)		1
-30	MS35206-245	.SCREW		4
	AN960D8	.WASHER		4
	41A-42134	.GROUND STUD INSTL - NOSE		NP
-31	9385	..GROUNDING DEVICE - (V03743)		1
-32	MS25083-4DE6	..JUMPER ASSY		1
R -33	NAS6204-2	..BOLT		1
	AN960D416	..WASHER		1
-34	44-51440-2	.TERMINAL STUD ASSY - (N28 & N29)		2
	AN960-616L	.WASHER		6
	MS21042L6	.NUT		4
-35	MS24171D1	.RELAY - (K1V & K2V)		2
-36	AN4-3A	.BOLT		4
	AN960PD416L	.WASHER		4
	MS21042L4	.NUT		4
	K41A-59013-18	.LABEL - (K1V)		1
	K41A-59013-19	.LABEL - (K2V)		1
-37	FSH	.MOUNTING - (V07693) (LIMITER)		1
-38	MS24693-274	.SCREW		2
	AN960PD10L	.WASHER		2
	MS21042L3	.NUT		2
-39	FLLA	.LIMITER - (V07693) (F2V)		1
-40	1N253	.DIODE - (CR3P)		1
-41	GB300NA111	.SWITCH - (V70192) (BAROMETRIC)		1
-42	MS27212-1-2	.TERMINAL BLOCK ASSY		1
	MS35206-216	.SCREW		2
	MS21083N04	.NUT		2
	MS25227-1A	.STRIP		2
	AN960-6L	.WASHER		2
	MS21083N06	.NUT		2

	FIGURE AND INDEX NUMBER	GROUP		ELECTRICAL EQUIPMENT	EFFEC-TIVITY	UNITS PER ASSY
		MAJOR ASSEMBLY		NOSE COMPARTMENT ELECTRICAL EQUIPMENT		
		PART NUMBER		1 2 3 4 5 6 7 NOMENCLATURE		
	103 -43	MS18029-1S2		.SHIELD		1
R	-44	C100U2		.SWITCH - (V81640) (S5K RELAY RESET)		1
R	-45	S01012-4616		.SOCKET - (V35344) (RELAY SOCKET)		1
		JAN1N540		.DIODE - (CR1K)		1
R	-46	9225-4416		.RELAY - (V35344) (K3K)		1
	-47	P26B28H6A		.RELAY - (K4K)		1
	-48	ST106N		TRANSMITTER - HYDRAULIC PRESSURE (SEE FIG. 130A)		REF
	-49	AE322-3B		REGISTER - (TYPE 2 ACCELEROMETER) (SEE FIG. 130A)		REF
		K41A-58037-2	*	START SYSTEM INSTL - 24V (SEE FIG. 105)		REF
	-50	K41A-58037-26	*	.PLATE		1
	-51	MS35207-264	*	.SCREW		4
		AN960D10L	*	.WASHER		4
		MS21043-3	*	.NUT		4
R	-52	A848KBH	*	.RELAY - (V74063)		1
		JANIN3957		.DIODE - (CR6KA)		1
	-53	MS24693-273	*	.SCREW		4
		AN960C10L	*	.WASHER		4
		MS21043-3	*	.NUT		4
		K41A-58044-2	**	DUAL STATIC INVERTER & UHF SYSTEM INSTL		NP
	-54	ASH564B-6	**	INVERTER - STATIC (NO. 1 MAIN & NO. 2 STBY) (07639)		2
		NAS1304-12	**	.BOLT		4
		AN960KD416	**	.WASHER		4
	-55	MS3106R24-11S	**	.CONNECTOR - (P1V & P2V)		2
		M81714/12-20B-1	**	.SPLICE – (SPL1, SPL2 & SPL3) (81349)		3
	-56	K41A-58040-4	**	.HEATSINK		4
		MS35207-269	**	.SCREW		4
		AN960D10L	**	.WASHER		4
		MS21042L3	**	.LOCKNUT		4
	-57	PHP24	**	.TRANSIENT SUPPRESSOR – (CZ1A & CZ2A) (24444)		2
		MS35206-326	**	.SCREW		2
		AN960KD4	**	.WASHER		4
		MS21042L04	**	.LOCKNUT		2
R	-58	NW4524000-1	**	.BRACKET ASSEMBLY – T		1
		NAS1306-6	**	.BOLT		4
		AN960KD616	**	.WASHER		4
		AN960-6	**	.WASHER		1
		41A-58038-92	**	.WASHER		2
		41A-58038-94	**	.WASHER		2
		MS21042L6	**	.LOCKNUT		4
	-59	MS24171D1	**	RELAY - (K9P)		REF
				-OOO-		
			*	IAW C-12-114-000/CF-458		
			**	IAW C-12-114-000/CF-459 OR /CF-461		

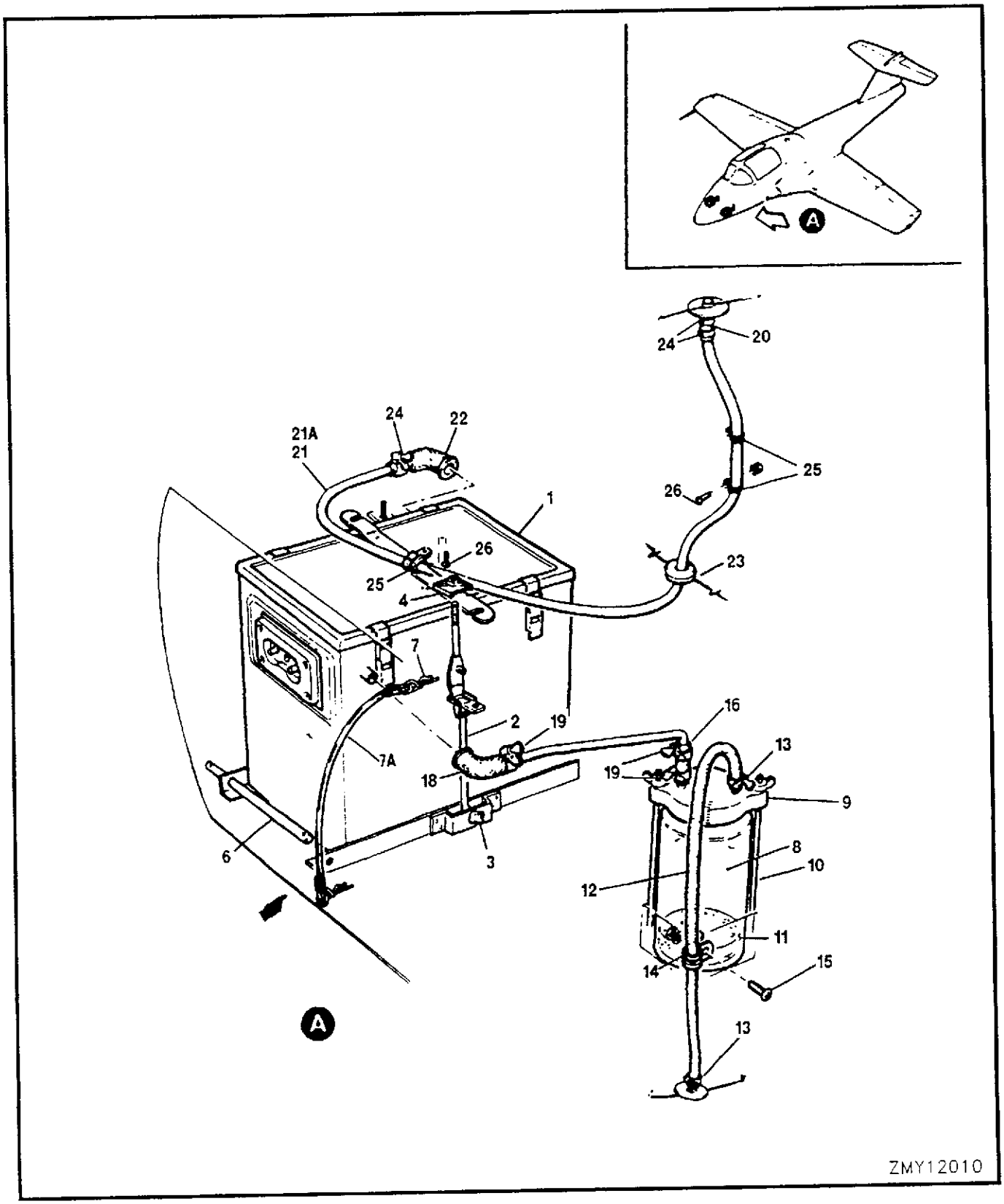

FIGURE 104 STORAGE BATTERIES

	FIGURE AND INDEX NUMBER	GROUP		ELECTRICAL EQUIPMENT	EFFEC-TIVITY	UNITS PER ASSY
		MAJOR ASSEMBLY		STORAGE BATTERIES		
		PART NUMBER		1 2 3 4 5 6 7 NOMENCLATURE		
	104 -	41A-51000		BATTERY INSTL - (SEE FIG. 103)		NP
	- 1	MS24497-5		.BATTERY - (NICKEL CADMIUM) (COMPLETE WITH CONTAINER & COVER)		2
	- 2	S1417-2	*	.ROD ASSY		4
		SCB83314-2	*	..CATCH - SUITCASE		4
	- 3	MS20392-1C11		.PIN		4
		AN960D6L		.WASHER		4
		MS24665-130		.COTTER PIN		4
	- 4	41A-51000-74	*	.TAB		4
	- 5			DELETED		
	- 6	41A-51000-16		.ROD - BATTERY SECURING		2
	- 7	AN415-2	*	.PIN		4
	- 7A	NO NUMBER	*	.CABLE - (MIL-W-1511)		AR
		128-2VC	*	.SLEEVE		8
	- 8	S1416		.JAR - (V88308)		2
	- 9	S1413		.COVER ASSY - (V88308)		2
		S1420		..SEAL - (V88308)		1
	-10	S1414-1		.BOLT ASSY - (V88308)		4
		AN960D10L		.WASHER		4
	-11	249149		.SPONGE - (36659)		2
	-12	41A-51000-28		.HOSE - JAR TO FUS STA 146 EXHAUST VENT (MADE FROM SYNTHETIC RUBBER 5/16 ID X 1/2 OD AMS 3207 SHORE HARD 25-35)		2
	-13	AN737TW22		.CLAMP		4
	-14	MS21919WDG8		.CLAMP		2
	-15	MS35206-244		.SCREW		2
		AN960D8L		.WASHER		2
		MS21042L08		.NUT		2
R	-16	41A-51000-36		.HOSE - (BATTERY TO JAR) (MADE FROM SYNTHETIC RUBBER 5/16 ID X 3/32 OD AMS3207 SHORE HARD 25-35)		2
R	-17	41A-51000-32		.TUBING - BATTERY DRAIN TO JAR L) (MADE FROM 5/16 OD X .028 ID MIL-T-8506 TYPE 304)		1
R		41A-51000-30		.TUBING - BATTERY DRAIN TO JAR RH (MADE FROM 5/16 OD X.028 ID MIL-T-8506 TYPE 304)		1
	-18	9555A		.ELBOW - (HPL)		2
	-19	AN737TW22		.CLAMP		6
R	-20	41A-51000-36		.HOSE - (BATTERY INTAKE VENT) (MADE FROM SYNTHETIC RUBBER 5/16 ID X 3/32 OD AMS3207 SHORE HARD 25-53)		2
R	-21	41A-51000-34		.TUBING - BATTERY INTAKE VENT LH (MADE FROM NYLON TUBING 5/16 OD X .242 ID MPS184-40)		1
R	-21A			DELETED		
R		41A-51000-35		.TUBING - BATTERY INTAKE VENT RH (MADE FROM NYLON TUBING 5/16 OD X .242 ID MPS184-40)		1
R				DELETED		
	-22	9555A		.ELBOW - (HPL)		2
	-23	MS35489-38		.GROMMET		2
	-24	AN737TW22		.CLAMP		6
	-25	MS21919WDG5		.CLAMP		6
	-26	MS35206-244		.SCREW		6
		AN960D8L		.WASHER		6
		MS21042L08		.NUT		6
				-OOO-		
			*	IAW C-12-114-000/CF-382		

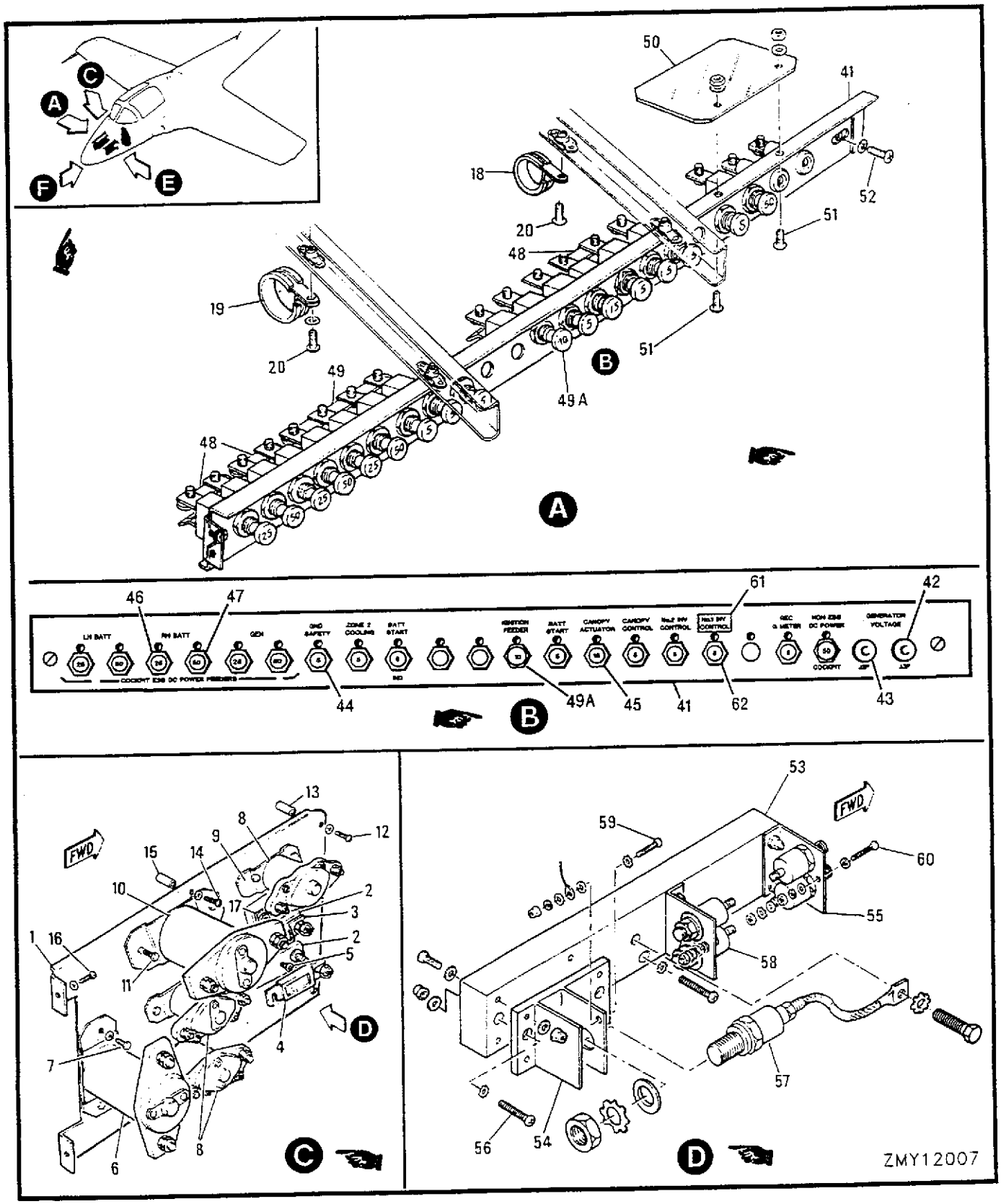

FIGURE 105 (Sheet 1 of 2) MAIN DISTRIBUTION & RELAY PANELS

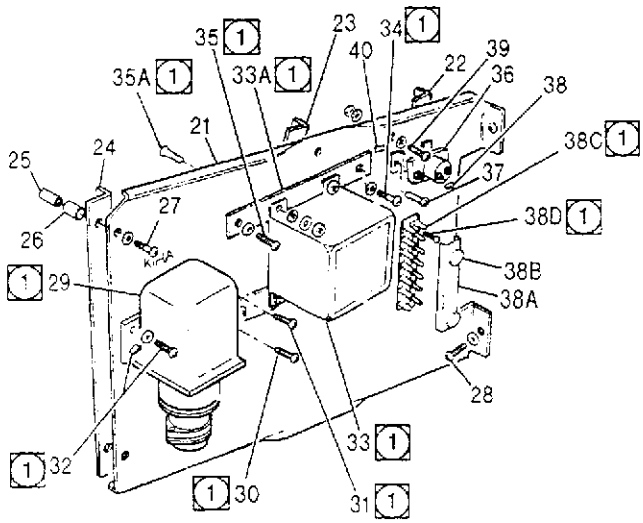

E

EFFECTIVITY

1 For aircraft without C-12-114-000/CD-033 embodied.

2 For aircraft with C-12-114-000/CD-033 embodied.

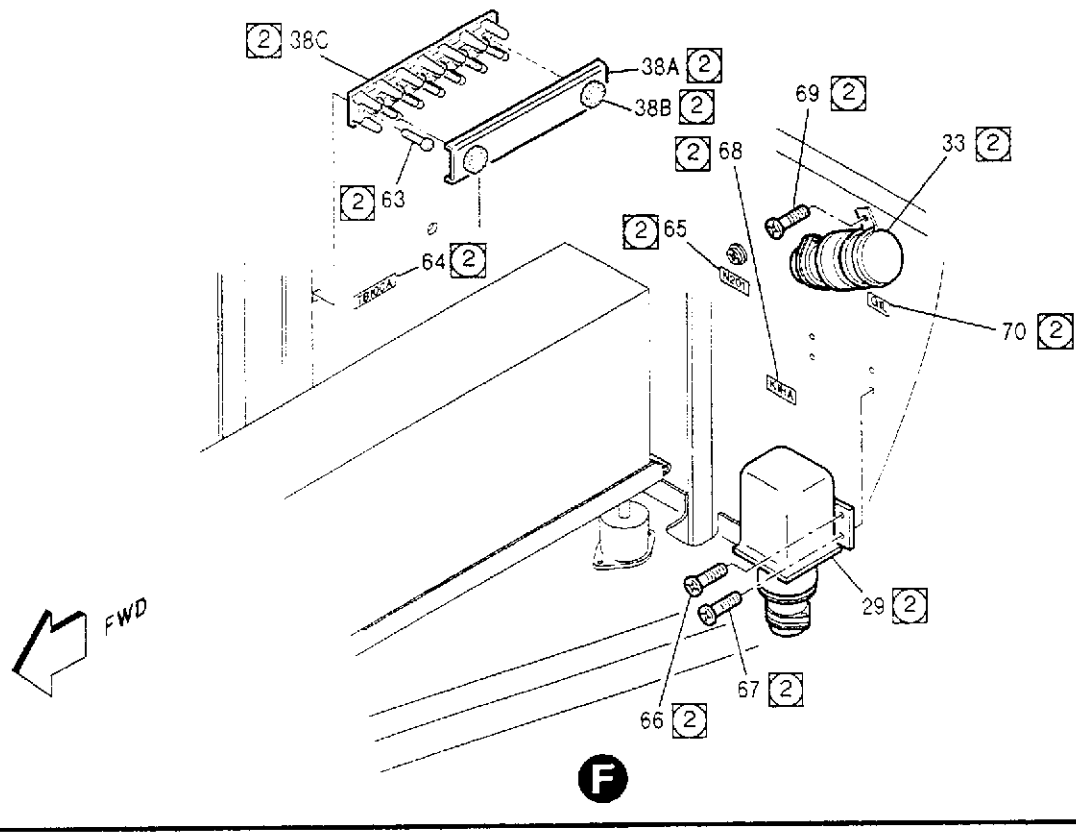

F

FIGURE 105 (Sheet 2 of 2) Main Distribution & Relay Panels

	FIGURE AND INDEX NUMBER	GROUP		ELECTRICAL EQUIPMENT	EFFEC-TIVITY	UNITS PER ASSY
		MAJOR ASSEMBLY		MAIN DISTRIBUTION & RELAY PANELS		
		PART NUMBER		1 2 3 4 5 6 7 NOMENCLATURE		
	105 -	41A-42114		PANEL INSTL - MAIN DISTRIBUTION (RH) (MOD) (SEE FIG. 103)		NP
		41A-42114-60		.PANEL ASSY - MAIN DISTRIBUTION (RH)		1
	- 1	41A-42112-84		..PANEL ASSY - MAIN DISTRIBUTION		1
	- 2	FSH		..MOUNTING - (V07693) (LIMITER)		3
	- 3	FLLE		..LIMITER - (V07693) (F2P & F3P)		2
	- 4	FLLA		..LIMITER - (V07693) (F1V)		1
	- 5	MS24693-274		..SCREW		6
		SL201-6AA		..CLIPNUT - (V97393)		6
	- 6	MS24179D1		..RELAY - (K11P)		1
R	- 7	MS35207-263		..SCREW		2
		AN960PD10L		..WASHER		2
	- 8	MS24171D1		..RELAY - (K4P, K5P & K6P)		3
		1N3957		..DIODE - (ON K4P & K5P)		2
	- 9	AN4-3A		..BOLT		6
	-10	MS24185D1		..RELAY - (K3P)		1
	-11	AN4-3A		..BOLT		2
R	-12	MS35207-266		.SCREW		3
	-13	NAS43DD3-28		.SPACER		3
R	-14	MS35206-340		.SCREW		1
	-15	NAS43DD3-46		.SPACER		1
		AN960D10L		.WASHER		4
R	-16	MS35207-263		.SCREW		4
		AN960D10L		.WASHER		4
		41A-43025		.HARNESS INSTL - MAIN DISTR PANEL (MOD)		NP
	-17	41A-42158		..BUSBAR - MAIN DISTRIBUTION PANEL		1
		41A-57012-802		..HARNESS ASSY - MAIN DISTRIBUTION PANEL		1
	-18	MS21919WDG11		..CLAMP		1
	-19	MS21919WDG16		..CLAMP		1
R	-20	MS35206-246		..SCREW		2
		AN960D8L		..WASHER		2
		41A-42112-82		PANEL INSTL - RELAY (LH) (SEE FIG. 103)		NP
		41A-42112-72		.PANEL ASSY - RELAY (LH)		1
	-21	41A-42112-70		..PANEL - RELAY		1
	-22	41A-42112-16		..ANGLE		1
	-23	41A-42112-44		..ANGLE		1
	-24	41A-42112-42		..ANGLE		1
	-25	41A-42112-56		..TUBE		4
	-26	NAS43DD4-26		..SPACER		4
R	-27	MS35207-266		.SCREW		4
R	-28	MS35207-263		.SCREW		2
		AN960D10L		.WASHER		6
	-29	25830071		.RELAY - (V80234) (K1HA)		1
	-30	AN500A8-8		.SCREW		1
R	-31	MS35206-246		.SCREW		1
R	-32	MS35206-245		.SCREW		2
		AN960PD8L		.WASHER		4
R	-33	577-100	*	.FLASHER - NAV LIGHT (V96182) (G1L)		1
	-33A	NO NUMBER	*	.BRACKET		2
	-34	AN501A10-8		.SCREW		1
R	-35	MS35207-263		.SCREW		3
		AN960D10L		.WASHER		4
	-35A	NAS1203-4	*	.SCREW		4
		AN960C10	*	.WASHER		4
		MS35338-43	*	.LOCK WASHER		4
		FN1014-1032	*	.NUT - (V56878)		4
	-36	MS24187D1		.RELAY - (K9P)		1
R	-37	MS35207-263		.SCREW		2
		AN960-10L		.WASHER		2
	-38	K41A-59008-5		.DECAL - (K9P)		1
			*	IAW C-12-114-000/CF-451		

	FIGURE AND INDEX NUMBER	GROUP		ELECTRICAL EQUIPMENT	EFFEC-TIVITY	UNITS PER ASSY
		MAJOR ASSEMBLY		MAIN DISTRIBUTION & RELAY PANELS		
		PART NUMBER		1 2 3 4 5 6 7 NOMENCLATURE		
	105 -38A	MS18029-11S10	**	.COVER		1
	-38B	MS18029-21	**	.NUT		2
	-38C	MS27212-1-20	**	.TERMINAL BLOCK ASSY - (TB100A)		1
		S1307H1-10	**	.STRIP - (V88308)		1
	-38D	MS35206-215	**	.SCREW		2
		AN960-6L	**	.WASHER		2
		MS21044N04	**	.NUT		2
R	-39	MS35207-265		.SCREW - (N86 GROUND STUD)		1
		MS35335-32		.LOCK WASHER		1
		AN960-10L		.WASHER		2
		MS35338-43		.LOCK WASHER		2
		MS35650-302		.NUT		1
	-40	K41A-59005-6		.DECAL - (N86)		1
		41A-42169		PANEL INSTL - NOSE CIRCUIT BREAKER (IAW C-12-114-000/CF-337 & 354) (SEE FIG. 103)		NP
		41A-42169-810		.PANEL ASSY - NOSE CIRCUIT BREAKER		1
	-41	41A-42169-38		..PANEL - CIRCUIT BREAKERZEE		1
	-42	AN3249-1		..JACK - (J3P)		1
	-43	AN3249-2		..JACK - (J2P)		1
	-44	S1412-5		..CIRCUIT BREAKER - (V88308)		7
	-45	S1412-15		..CIRCUIT BREAKER - (V88308)		1
	-46	S1412-25		..CIRCUIT BREAKER - (V88308)		3
	-47	S1412-50		..CIRCUIT BREAKER - (V88308)		4
	-48	S1448-4-28-2		..BUS - (V88308)		3
	-49	S1448-4-28-4		..BUS - (V88308)		1
	-49A	MS26574-10	*	..CIRCUIT BREAKER		1
	-50	K41A-58037-18	*	..SHIELD		1
R	-51	MS35206-227		..SCREW		2
		AN960D6L		..WASHER		2
		MS21042L06		..NUT		2
R	-52	MS35207-262		.SCREW		4
		AN960D10L		.WASHER		4
		K41A-58037-2	*	START SYSTEM INSTL - 24V		NP
		K41A-58037-4	*	.MOUNTING ASSY - DIODE		1
	-53	K41A-58037-20	*	..INSULATOR		1
		K41A-58037-22	*	..INSULATOR		1
	-54	K41A-58037-24	*	..HEAT SINK		1
	-55	K41A-58037-12	*	..HEAT SINK		2
	-56	MS35207-267	*	..SCREW		4
		MS35207-268	*	..SCREW		4
		AN960D10L	*	..WASHER		8
	-57	300U60A	*	..DIODE - (V75042)		1
	-58	152K60A	*	..DIODE - (V75042)		4
		NAS428-5-20	*	..BOLT		1
		AN960C516L	*	..WASHER		3
		MS35335-34	*	..LOCKWASHER		2
		MS35338-45	*	..LOCKWASHER		1
		MS35650-3312	*	..NUT		2
	-59	MS35207-281	*	..SCREW		1
		MS35335-33	*	..LOCKWASHER		1
		AN960PD416	*	..WASHER		2
		MS35338-44	*	..LOCKWASHER		1
		MS21043-4	*	..NUT		1
	-60	MS35207-265	*	..SCREW - GROUND STUD		2
		MS35335-32	*	..LOCKWASHER		4
		AN960D10L	*	..WASHER		4
		MS35338-43	*	..LOCKWASHER		2
		MS35650-302	*	..NUT		4
		JAN1N3957	*	.DIODE - (CR2KA, CR2KB, CR3KA, CR3KB, CR4KA, CR4KB, CR5KA, CR5KB)		8
			*	IAW C-12-114-000/CF-458		
			**	IAW C-12-114-000/CF-476		

	FIGURE AND INDEX NUMBER	GROUP		ELECTRICAL EQUIPMENT	EFFEC-TIVITY	UNITS PER ASSY
		MAJOR ASSEMBLY		MAIN DISTRIBUTION & RELAY PANELS		
		PART NUMBER		1 2 3 4 5 6 7 NOMENCLATURE		
	105	K41A-58044-2	*	DUAL STATIC INVERTER AND UHF SYSTEM INSTL - (SEE FIG. 103)		REF
	-61	K41A-58043-16	*	.LABEL - (NO.1 INV CONTROL)		1
	-62	S1412-5		CIRCUIT BREAKER - (5 AMP) (CB4V)		REF
R		NW4601105-1	**	RECEIVER INSTL - ADF (SEE SECTION 13)		REF
R	-63	MS35206-214	**	.SCREW (ATTACHING TB100A)		2
R		AN960-4L	**	.WASHER (ATTACHING TB100A)		2
R		MS21042L04	**	.NUT (ATTACHING TB100A)		2
R	-64	NW4601147-8	**	.LABEL (TB100A)		1
R	-65	NW4601147-1	**	.LABEL (N201)		1
R	-66	MS35206-243	**	.SCREW (ATTACHING K1HA)		3
R	-67	MS35265-43	**	.SCREW (ATTACHING K1HA)		1
R		AN960-8	**	.WASHER (ATTACHING K1HA)		4
R		MS21042L08	**	.NUT (ATTACHING K1HA)		4
R	-68	NW4601147-7	**	.LABEL (K1HA)		1
R	-69	MS35206-243	**	.SCREW (ATTACHING G1L)		1
R		AN960-8	**	.WASHER (ATTACHING G1L)		1
R		MS21042L08	**	.NUT (ATTACHING G1L)		1
R	-70	NW4601147-9	**	.LABEL (G1L)		1
				-000-		
			*	IAW C-12-114-000/CF-459 OR /CF-461		
R			**	IAW C-12-114-000/CD-033		

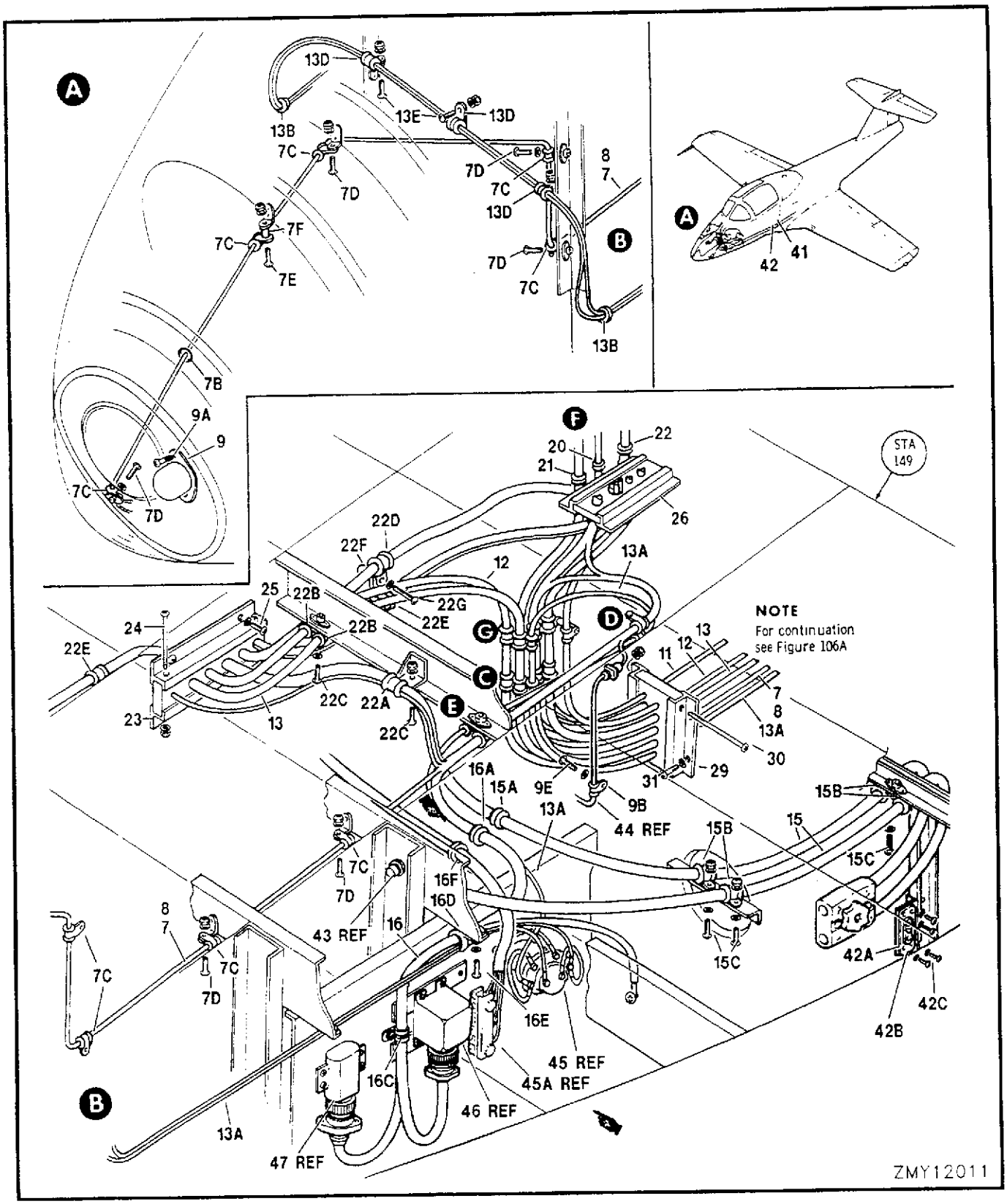

FIGURE 106 (SHEET 1) NOSE COMPARTMENT ELECTRICAL HARNESS

	FIGURE AND INDEX NUMBER	GROUP		ELECTRICAL EQUIPMENT	EFFEC-TIVITY	UNITS PER ASSY
		MAJOR ASSEMBLY		NOSE COMPARTMENT ELECTRICAL HARNESS		
		PART NUMBER		1 2 3 4 5 6 7 NOMENCLATURE		
	106 -	41A-43013		HARNESS INSTL - NOSE COMPARTMENT ELECTRICAL (SEE FIG. 103)		NP
	- 1	41A-57011		.HARNESS ASSY - (RECORDING ACCELEROMETER) (SEE SECTION 14)		REF
	- 1A	41A-57000-802		.HARNESS ASSY - (P10 TO INVERTERS)		1
	- 2	MS3108R22-5P		..CONNECTOR - (NO. 2 INVERTER DISCONNECT)		1
	- 3	PT06SE12-3P		..PLUG - (BAC) (NO. 1 INVERTER DISCONNECT)		1
	- 3A	PT06SE20-16SW		..PLUG - (BAC) (FUS STA 149 DISCONNECT)		1
	- 4	41A-57006-802		.HARNESS ASSY - (NO. 1 INVERTER TO POWER RELAY & GROUND N23)		1
	- 5	41A-57007-800		.HARNESS ASSY - (NO. 2 INVERTER TO POWER RELAY & GROUND N2)		1
	- 6	MS3108R22-6S		..PLUG - (NO. 2 INVERTER DISCONNECT)		1
	- 6A	MS21919WDG6		.CLAMP		1
	- 6B	MS21919WDG7		.CLAMP		1
	- 6C	MS21919WDG3		.CLAMP		6
	- 6D	MS21919WDG5		.CLAMP		1
	- 6E	MS21919WDG8		.CLAMP		1
R	- 6F	MS35206-245		.SCREW		5
		AN960PD8L		.WASHER		5
		MS21042L08		.NUT		2
	- 7	41A-57003-800		.HARNESS ASSY - (P16)		1
	- 7A	PT06SE22-21PW		..PLUG - (BAC) (FUS STA 149 DISCONNECT)		1
		PT06SE14-5S		..PLUG - (BAC) (WSHLD DEMIST VALVE DISC)		1
		PT06SE12-3S		..PLUG - (BAC) (FUEL SHUTOFF VALVE DISC)		1
		MS3106R10SL3S		..PLUG - (FUEL LOW PRESSURE & ANTI		2
		MS3108R10SL3S		..PLUG - (CAB AIR INLET TEMP SENSOR DISC)		1
	- 7B	MS35489-3		.GROMMET		1
	- 7C	MS21919WDG2		.CLAMP		7
R	- 7D	MS35206-245		.SCREW		6
R	- 7E	MS35206-247		.SCREW		1
	- 7F	NAS43DD3-16		.SPACER		1
		AN960PD8L		.WASHER		7
		MS21042L08		.NUT		4
	- 7G	MS21919WDG10		.CLAMP		1
R	- 7H	MS35206-245		.SCREW		1
		AN960PD8L		.WASHER		1
		MS21042L08		.NUT		1
	- 8	41A-57004-802		.HARNESS ASSY - (P18 TO NOSE & TROUGH AREA)		1
	- 8A	PT06SE22-21P		..PLUG - (BAC) (FUS STA 149 DISCONN)		1
		MS3106R14S2S		..PLUG - (HYD PRESSURE XMTR DISCONNECT		1
		MS3108R10SL3S		..PLUG - (CAB AIR INLET OVERHEAT SW DISC)		1
		PT06SE12-3S		..PLUG - (BAC) (NG STEERING SOV DISCONNECT)		1
		MS3106R20-27S		..PLUG - (FIREWALL DISCONNECT)		1
		PT06SE10-6S		..PLUG - (BAC) (NG UPLOCK SWITCH DISC)		1
		PT06SE10-6SW		..PLUG - (BAC) (NG DOWNLOCK SWITCH DISC)		1
	- 8B	PT06SE12-10S		..PLUG - (BAC) (FIRE & OVERHEAT DETECTOR)		1
		PT00SE12-10S		..RECEPTACLE - (BAC) (NG WT/SWITCH DISC)		1
	- 9	30-1591-1	*	..LIGHT ASSY - (GROUND OBSERVER)		1
		A4174-24C	*	...LAMP		1
		MS23006-3		...COVER		1
		AN3111-2		..RING - (BONDING)		1
		41A-42157		..SPACER		1
		41A-42110-2		..PLATE		1
R	- 9A	MS35206-230	*	..SCREW		2
		AN960D6	*	..WASHER		2
		CFT75-36-009	*	..TERMINAL		2
	- 9B	MS21919WDG4		.CLAMP		1
	- 9C	MS21919WDG6		.CLAMP		2
	- 9D			DELETED		
R	- 9E	MS35206-245		.SCREW		3
		AN960PD8L		.WASHER		3
	- 9F	MS21919WDG5		.CLAMP		1
			*	IAW C-12-114-000/CF-422		

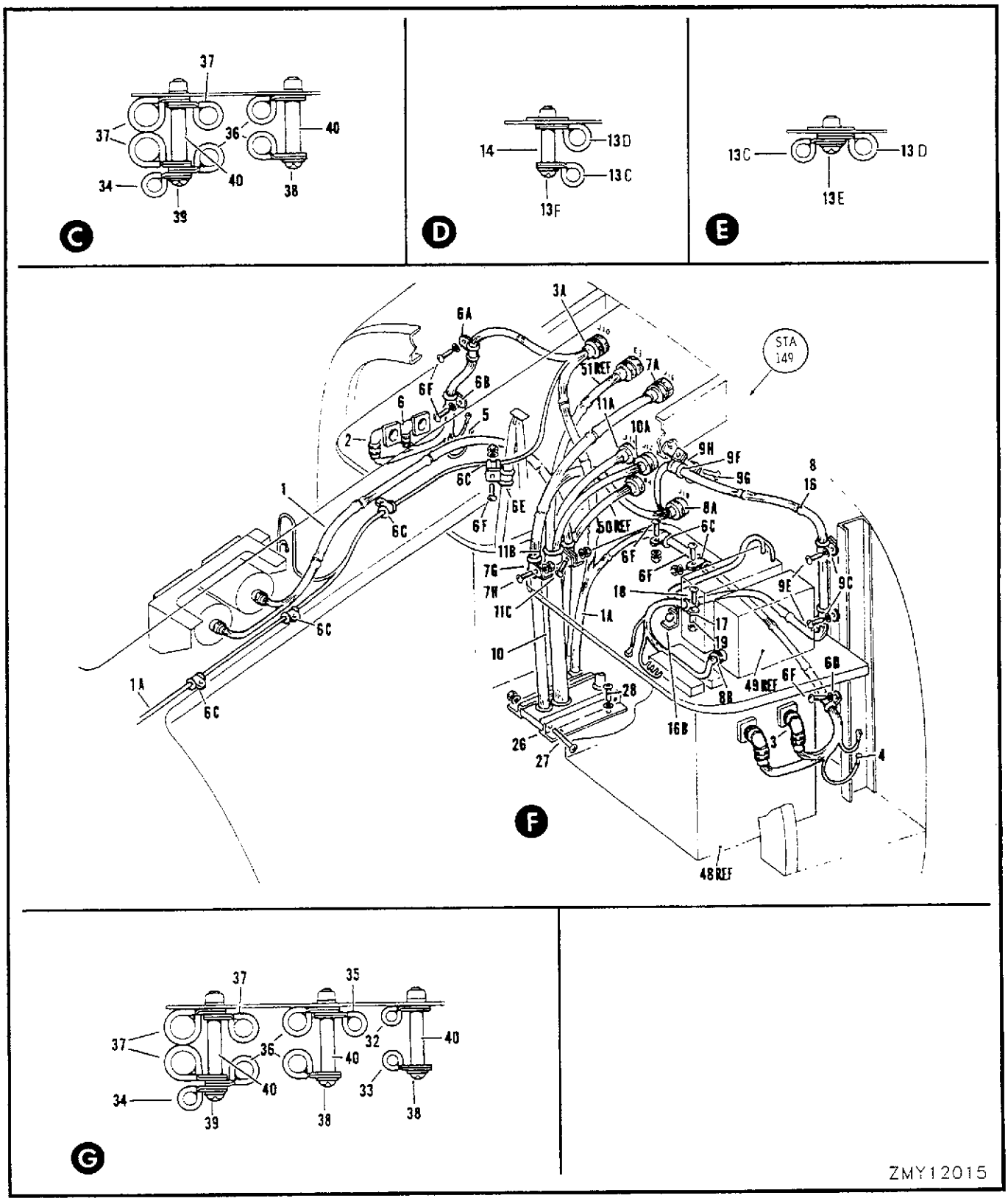

FIGURE 106 (SHEET 2) NOSE COMPARTMENT ELECTRICAL HARNESS

	FIGURE AND INDEX NUMBER	GROUP	ELECTRICAL EQUIPMENT	EFFEC-TIVITY	UNITS PER ASSY
		MAJOR ASSEMBLY	NOSE COMPARTMENT ELECTRICAL HARNESS		
		PART NUMBER	1 2 3 4 5 6 7 NOMENCLATURE		
R	106 - 9G	MS35206-232	.SCREW		1
	- 9H	NAS43DD3-40	.SPACER		1
		MS21042L08	.NUT		1
	-10	41A-57008-800	.HARNESS ASSY - (P12 TO NOSE COMPARTMENT)		1
	-10A	PT06SE20-16P	..PLUG - (BAC) (FWD PRESS/BHD DISCONNECT)		1
	-11	41A-57009	.HARNESS ASSY - (P14 TO TROUGH & NOSE COMPARTMENT)		1
	-11A	MS3106R20-18P	..PLUG - (FWD PRESSURE BULKHEAD DISCONNECT)		1
		PT06SE12-3S	..PLUG - (BAC) (FUEL BOOSTER PUMP)		1
	-11B	MS21919WDG9	.CLAMP		1
R	-11C	MS35206-245	.SCREW		1
		AN960PD8L	.WASHER		1
		MS21042L08	.NUT		1
	-12	41A-57010-800	.HARNESS ASSY - (MDP TO TROUGH)		1
	-13	41A-57010-802	.HARNESS ASSY - (MDP TO TROUGH, F/WALL END)		1
	-13A	41A-57010-806	.HARNESS ASSY - (CANOPY GROUND POWER)		1
	-13B	MS35489-17	.GROMMET		2
	-13C	MS21919WDG4	.CLAMP		2
	-13D	MS21919WDG7	.CLAMP		6
R	-13E	MS35206-245	.SCREW		5
R	-13F	MS35206-232	.SCREW		1
	-14	NAS43DD3-43	.SPACER		1
		AN960PD8L	.WASHER		6
		MS21042L08	.NUT		6
	-15	41A-57013	.HARNESS ASSY - (P1P LH BATTERY DISCONNECT)		1
		MS25182-2	..CONNECTOR - PLUG ELECT IC QUICK		1
		MS25182-2	..PLUG - BATTERY DISCONNECT		1
	-15A	MS35489-45	.GROMMET		1
	-15B	MS21919WDG9	.CLAMP		8
R	-15C	MS35206-245	.SCREW		8
		AN960PD8L	.WASHER		8
		MS21042L08	.NUT		4
	-16	41A-57015-800	.HARNESS ASSY - (P10HA & P2L TO P16)		1
		MS3106R16S8S	..PLUG - (NAV LIGHT FLASHER DISCONNECT)		1
	-16A	MS35489-43	.GROMMET		1
		41A-57017	.HARNESS ASSY - (TB46 TO CR1L)		1
	-16B	IN1614	..DIODE - (CR1L)		1
		S1244B	.CONDUIT - (V88308) (DIA & LENGTH AS REQUIRED)		AR
	-16C	MS21919WDG5	.CLAMP		1
	-16D	MS21919WDG7	.CLAMP		1
R	-16E	MS35206-245	.SCREW		1
		AN960PD8L	.WASHER		1
	-16F	AN931A12-20 *	.GROMMET - (IAW C-12-114-000/CF-476)		1
	-17	MS21919WDG6	.CLAMP		1
R	-18	MS35206-250	.SCREW		1
	-19	NAS43DD3-48	.SPACER		1
		MS21042L08	.NUT		1
	-20	MS35489-7	.GROMMET		1
	-21	MS35489-14	.GROMMET		1
	-22	MS35489-16	.GROMMET		1
	-22A	MS21919WDG10	.CLAMP		1
	-22B	MS21919WDG8	.CLAMP		2
R	-22C	MS35206-245	.SCREW		2
		AN960PD8L	.WASHER		2
		MS21042L08	.NUT		1
	-22D	MS21919WDG7	.CLAMP		1
	-22E	MS21919WDG13	.CLAMP		2
	-22F	NAS43DD3-80	.SPACER		1
R	-22G	MS35206-250	.SCREW		1
		AN960PD8L	.WASHER		1
	-23	41A-42155	.FAIRLEAD ASSY		1
		41A-42155-2	..CHANNEL - REINFORCING		2
		41A-42155-4	..CUSHION - ADELITE		2

	FIGURE AND INDEX NUMBER	GROUP	ELECTRICAL EQUIPMENT	EFFEC-TIVITY	UNITS PER ASSY
		MAJOR ASSEMBLY	NOSE COMPARTMENT ELECTRICAL HARNESS		
		PART NUMBER	1 2 3 4 5 6 7 NOMENCLATURE		
R	106 -24	MS35207-270	.SCREW		2
		MS21042L3	.NUT		2
R	-25	MS35206-245	.SCREW		4
		AN960PD8L	.WASHER		4
	-26	41A-42150	.FAIRLEAD ASSY		1
		41A-42150-2	..CHANNEL - REINFORCING		2
		41A-42150-4	..CUSHION - FAIRLEAD		2
R	-27	MS35207-273	.SCREW		2
		MS21042L3	.NUT		2
R	-28	MS35207-263	.SCREW		4
		AN960PD10L	.WASHER		4
	-29	41A-42153-10	.FAIRLEAD ASSY		1
		41A-42153-2	..CHANNEL - REINFORCING		2
		41A-42153-4	..CUSHION - FAIRLEAD (MAY BE PURCHASED FROM (V35943))		1
		41A-42153-12	..CUSHION - FAIRLEAD		1
		41A-42153-12	..CUSHION - FAIRLEAD (MAY BE PURCHASED FROM (V35943))		1
		41A-42153-14	..CUSHION - FAIRLEAD		1
		41A-42153-14	..CUSHION - FAIRLEAD (MAY BE PURCHASED FROM (V35943))		1
R	-30	MS35207-273	.SCREW		2
		AN960PD10L	.WASHER		2
		MS21042L3	.NUT		2
R	-31	MS35207-263	.SCREW		4
		AN960PD10L	.WASHER		4
	-32	MS21919WDG2	.CLAMP		1
	-33	MS21919WDG3	.CLAMP		1
	-34	MS21919WDG4	.CLAMP		2
	-35	MS21919WDG5	.CLAMP		1
	-36	MS21919WDG7	.CLAMP		6
	-37	MS21919WDG8	.CLAMP		6
R	-38	MS35206-250	.SCREW		3
	-39	MS35206-334	.SCREW		2
	-40	NAS43DD3-64	.SPACER		5
		AN960PD8L	.WASHER		5
		41A-43012	TROUGH INSTL - FUS HARNESS (SEE FIG. 106A)		REF
	-41	S1244B	.CONDUIT - (V88308) (DIA & LENGTH AS REQUIRED)		AR
	-42	S1244E	.CONDUIT - (V88308) (DIA & LENGTH AS REQUIRED)		AR
	-42A	NO NUMBER *	BRACKET		1
R		MS35207-263 *	SCREW		3
		AN960C10 *	WASHER		3
		NAS679A3 *	NUT		3
	-42B	BR8-1 *	RECEPTACLE - (ELC)		1
	-42C	AN509-10R10 *	SCREW		4
		AN960C10 *	WASHER		4
		NAS679A3 *	NUT		4
	-43	44-51440-2	TERMINAL STUD ASSY - (SEE FIG. 103)		REF
	-44	41A-85021-29	HARNESS ASSY - NOSE GEAR SHOCK STRUT (SEE SECTION 4)		REF
	-45	MS24185D1	RELAY - (K9P) (SEE FIG. 105)		REF
	-45A	MS27212-1-20	TERMINAL BLOCK ASSY - (TB100A) (SEE FIG. 105)		REF
	-46	577-100	FLASHER - (SEE FIG. 105) (IAW C-12-114-000/CF-451)		REF
	-47	25830071	RELAY - (K1HA) (SEE FIG. 105)		REF
	-48	32B180-1B	INVERTER - ROTARY (SEE FIG. 103)		REF
	-49	377-28-2A	CONTROL ASSY - (FIRE DETECTOR) (SEE FIG. 103)		REF
	-50	41A-57002	HARNESS ASSY - (SEE FIG. 114)		REF
	-51	41A-57001	HARNESS ASSY - (SEE FIG. 114)		REF
			-000-		
		*	IAW C-12-114-000/CF-293		

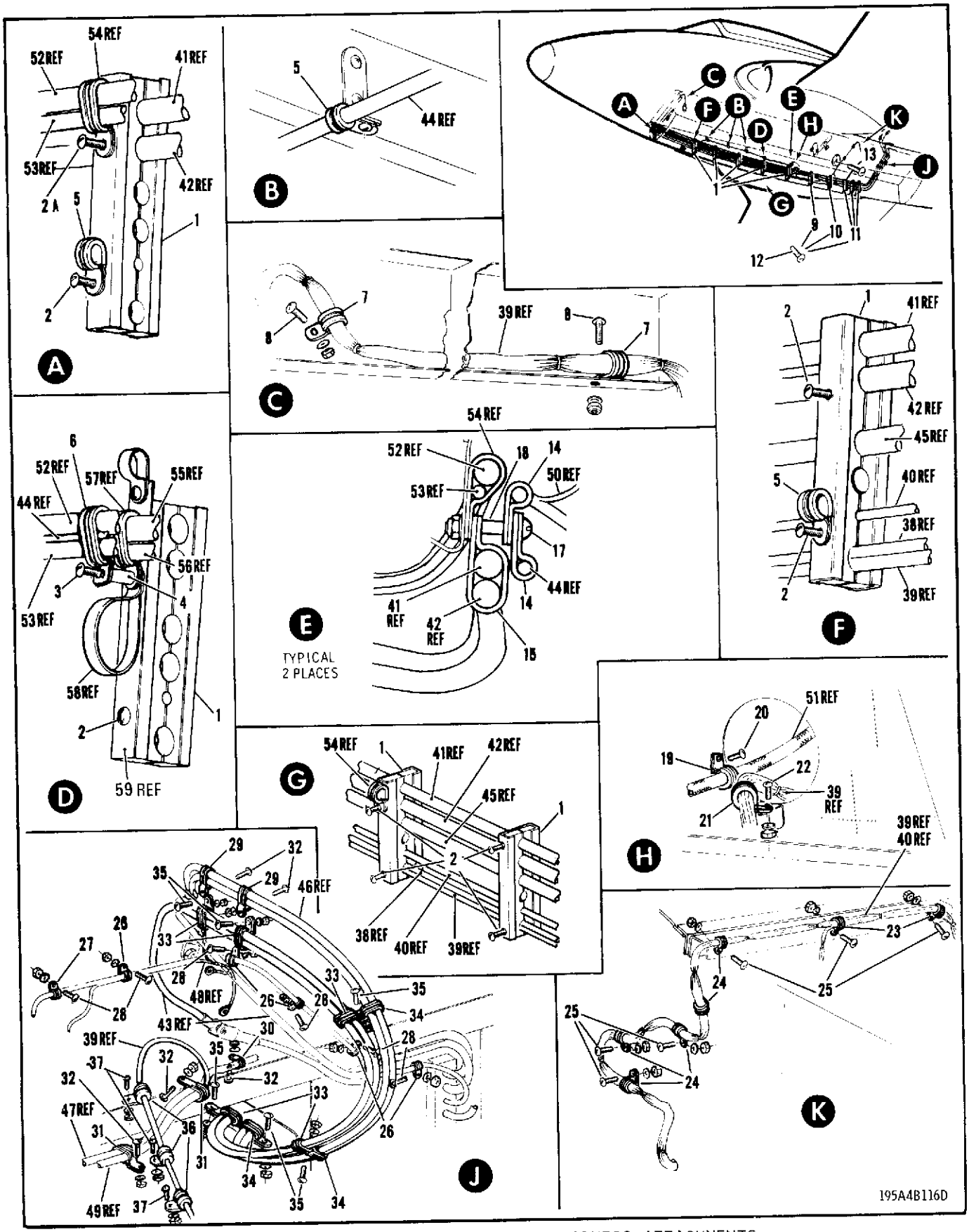

FIGURE 106A FUSELAGE TROUGH HARNESS ATTACHMENTS

	FIGURE AND INDEX NUMBER	GROUP	ELECTRICAL EQUIPMENT	EFFEC-TIVITY	UNITS PER ASSY
		MAJOR ASSEMBLY	FUSELAGE TROUGH HARNESS ATTACHMENTS		
		PART NUMBER	1 2 3 4 5 6 7 NOMENCLATURE		
	106A -	41A-43012	TROUGH INSTL - FUSELAGE HARNESS (CLAMPS) (SEE FIG. 115)		NP
	- 1	41A-42159-2	.FAIRLEAD ASSY - ELEC TROUGH (FUS STA 159, 171, 183, 194, 206 & 212)		6
R	- 2	MS35206-333	.SCREW		10
R	- 2A	MS35206-251	.SCREW		1
R	- 3	MS35206-254	.SCREW		1
	- 4	NAS43DD3-40	.SPACER		1
		AN960PD8L	.WASHER		12
	- 5	MS21919WDG4	.CLAMP - (FUS STA 159, 171, 179, 187 & 195)		5
	- 6	443-6-2-8	.CLIP - (V00502) (FUS STA 206)		1
	- 7	MS21919WDG3	.CLAMP - (FUS STA 159)		2
R	- 8	MS35206-245	.SCREW		2
		AN960PD8L	.WASHER		2
		MS21042L08	.NUT		2
	- 9	41A-42159-4	.FAIRLEAD ASSY - ELEC TROUGH (FUS STA 224)		1
	-10	41A-42159-6	.FAIRLEAD ASSY - ELEC TROUGH (FUS STA 232)		1
	-11	41A-42159-8	.FAIRLEAD ASSY - ELECTRICAL TROUGH (FUS STA 242, 248 & 256)		3
R	-12	MS35206-333	.SCREW		9
R	-13	MS35206-251	.SCREW		1
		AN960PD8L	.WASHER		10
	-14	MS21919WDG4	.CLAMP - (FUS STA 214)		4
	-15	443-7-2-8	.CLIP - (V00502) (FUS STA 214)		2
	-16		DELETED		
R	-17	MS35206-250	.SCREW		2
	-18	NAS43DD3-48	.SPACER		2
		AN960PD8L	.WASHER		2
		MS21042L08	.NUT		2
	-19	MS21919WDG3	.CLAMP - (FUS STA 218)		1
R	-20	MS35206-246	.SCREW		1
	-21	MS21919WDG5	.CLAMP - (FUS STA 218)		1
R	-22	MS35206-245	.SCREW		1
		AN960PD8L	.WASHER		2
		MS21042L08	.NUT		2
	-23	MS21919WDG5	.CLAMP - (FUS STA 237)		2
	-24	MS21919WDG4	.CLAMP - (FUS STA 237)		5
R	-25	MS35206-245	.SCREW		6
		AN960PD8L	.WASHER		6
		MS21042L08	.NUT		6
	-26	MS21919WDG4	.CLAMP - (FUS STA 257)		5
	-27	MS21919WDG3	.CLAMP - (FUS STA 257)		1
R	-28	MS35206-245	.SCREW		6
		AN960PD8L	.WASHER		6
		MS21042L08	.NUT		6
	-29	443-6-2-8	.CLIP - (V00502) (FUS STA 264 & 271)		2
	-30	MS21919WDG3	.CLAMP - (FUS STA 270)		1
	-31	443-4-2-8	.CLIP - (V00502) (FUS STA 273 & 274)		2
R	-32	MS35206-245	.SCREW		5
		AN960PD8L	.WASHER		5
		MS21042L08	.NUT		5
	-33	443-7-2-8	.CLIP - (V00502) (FUS STA 260, 263, 265 & 270)		5
	-34	443-6-2-8	.CLIP - (V00502) (FUS STA 260, 261 & 262)		3
R	-35	MS35206-245	.SCREW		6
		AN960PD8L	.WASHER		6
		MS21042L08	.NUT		6
	-36	MS21919WDG2	.CLAMP - (FUS STA 277)		3
R	-37	MS35206-245	.SCREW		3
		AN960PD8L	.WASHER		3
		MS21042L08	.NUT		3

FIGURE AND INDEX NUMBER	GROUP	ELECTRICAL EQUIPMENT	EFFEC-TIVITY	UNITS PER ASSY
	MAJOR ASSEMBLY	FUSELAGE TROUGH HARNESS ATTACHMENTS		
	PART NUMBER	1 2 3 4 5 6 7 NOMENCLATURE		
106A -38	41A-70382	HARNESS ASSY - (SEE SECTION 13)		REF
-39	41A-57004	HARNESS ASSY - (SEE FIG. 106)		REF
-40	41A-57009	HARNESS ASSY - (SEE FIG. 106)		REF
-41	41A-57010-800	HARNESS ASSY - (SEE FIG. 106)		REF
-42	41A-57010-802	HARNESS ASSY - (SEE FIG. 106)		REF
-43	41A-57010-804	HARNESS ASSY - (SEE FIG. 117)		REF
-44	41A-57010-806	HARNESS ASSY - (SEE FIG. 106)		REF
-45	41A-57011	HARNESS ASSY - RECORDING ACCELEROMETER (SEE SECTION 14)		REF
-46	41A-57201	HARNESS ASSY - (SEE FIG. 115)		REF
-47	41A-57300	HARNESS ASSY - (SEE FIG. 118)		REF
-48	41A-57306	HARNESS ASSY - (SEE FIG. 118)		REF
-49	41A-57312	HARNESS ASSY - (SEE FIG. 117)		REF
-50	41A-57314	HARNESS ASSY - (SEE FIG. 117)		REF
-51	41A-57316	HARNESS ASSY - (SEE FIG. 117)		REF
-52	41A-70370	LINE ASSY - (SEE SECTION 13)		REF
-53	41A-70371	LINE ASSY - (SEE SECTION 13)		REF
-54	445-3-7-2-8	CLIP - (SEE SECTION 13)		REF
-55	41A-42126-8	LINE ASSY - (SEE SECTION 15)		REF
-56	41A-42126-20	LINE ASSY - (SEE SECTION 15)		REF
-57	445-4-6-2-8	CLIP - (SEE SECTION 15)		REF
R -58	MS21919WCJ32	CLAMP - (SEE SECTION 9)		REF
-59	41A-90790	PLATE - POWER CONTROL MOUNTING (SEE FIG. 71)		REF

-000-

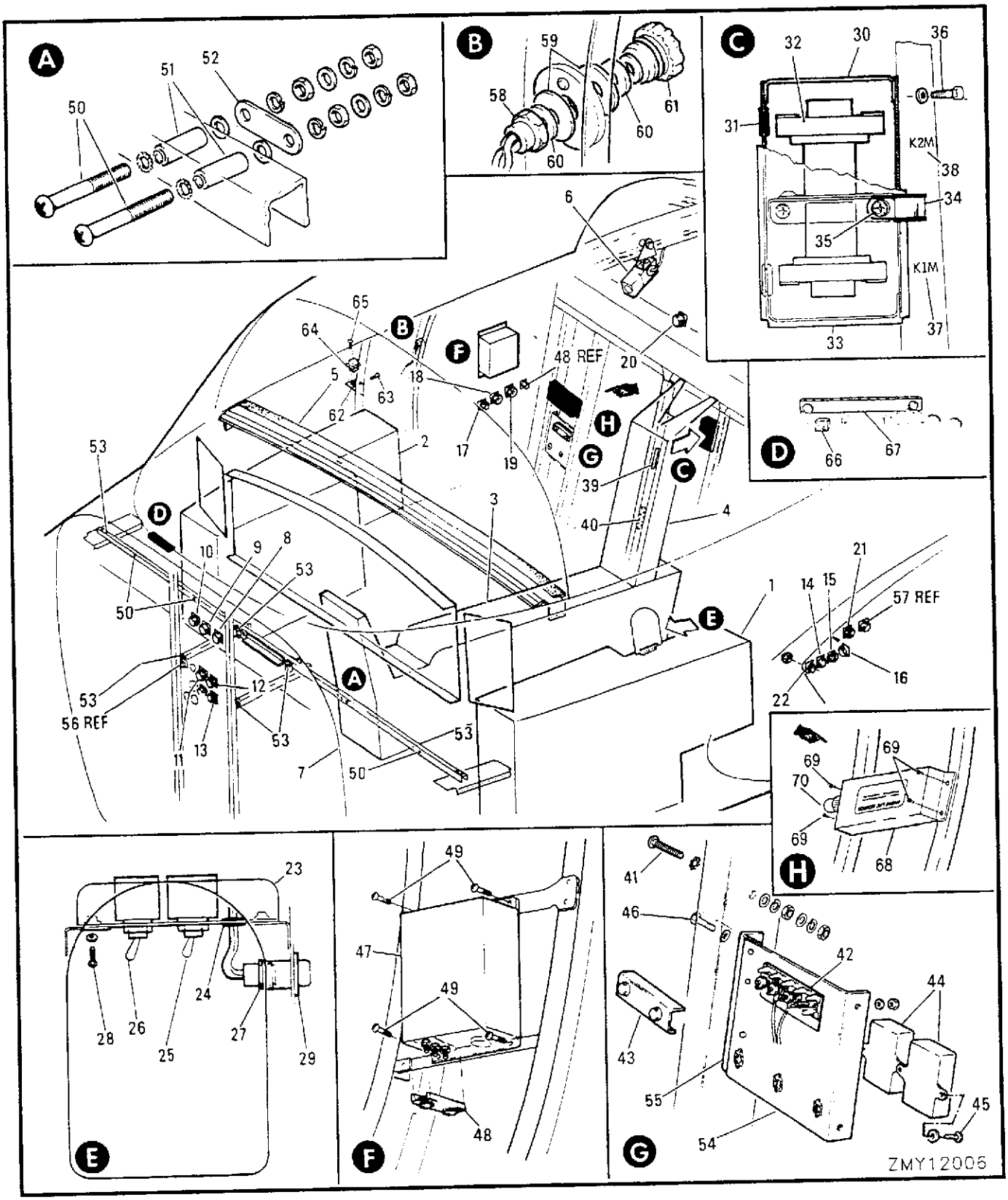

FIGURE 107 COCKPIT ELECTRICAL EQUIPMENT

FIGURE AND INDEX NUMBER	GROUP	ELECTRICAL EQUIPMENT	EFFEC-TIVITY	UNITS PER ASSY
	MAJOR ASSEMBLY	COCKPIT ELECTRICAL EQUIPMENT		
	PART NUMBER	1 2 3 4 5 6 7 NOMENCLATURE		
107 -	41A-42200	ELECTRICAL EQUIP INSTL - COCKPIT (SEE SECTION 3)		REF
- 1	41A-52023	.ELECTRICAL EQUIP INSTL - PORT CONSOLE (SEE FIG. 109)		REF
- 2	41A-52024	.ELECTRICAL EQUIP INSTL - STBD CONSOLE (SEE FIG. 109A)		REF
- 3	41A-52015	.ELECTRICAL EQUIP INSTL - CENTRE CONSOLE (SEE FIG. 110)		REF
- 4	41A-42201	.PANEL INSTL - CIRCUIT BREAKER (SEE FIG. 112)		REF
- 5	41A-52011	.SHROUD & LIGHTING EQUIP INSTL - INSTR/PNL (SEE FIG. 113)		REF
- 6	41A-42168	.FLOODLIGHT INSTL - LET DOWN CHART (SEE FIG. 113)		REF
- 7	41A-42203	.ELECTRICAL & ELECTRONIC EQUIP INSTL - FUS STA 149 BULKHEAD (SEE FIG. 108)		REF
- 8	SPB22-21PSW003	.RECEPTACLE - (V07213) (UTILIZATION J16)		1
	10-150949-22	.GASKET - (V07213)		1
- 9	10-260131-201	.RECEPTACLE - (V07213) (AC E3 & DC E4)		2
	10-36675-18	.GASKET - (V07213)		2
-10	SPB20-16PSW003	.RECEPTACLE - (V07213) (DC J10)		1
	10-150949-20	.GASKET - (V07213)		1
-11	TBF20-18PS	.RECEPTACLE - (V07213) (UTILIZATION J14)		1
	10-36675-20	.GASKET - (V07213)		1
-12	SPB20-16PS003	.RECEPTACLE - (V07213) (DC J12)		1
	10-150949-20	.GASKET - (V07213)		1
-13	SPB22-21PS003	.RECEPTACLE - (V07213) (J18)		1
	10-150949-22	.GASKET - (V07213)		1
-14	SPB20-39PS003	.RECEPTACLE - (V07213) (J38)		1
	10-150949-20	.GASKET - (V07213)		1
-15	SPB22-21PS003	.RECEPTACLE - (V07213) (J36)		1
	10-150949-22	.GASKET - (V07213)		1
-16	6206-1	.RECEPTACLE - (V89305) (J32)		1
		OR		
	20AS132-3	.RECEPTACLE		1
-17	SPB22-21PS003	.RECEPTACLE - (V07213) (J42)		1
	10-150949-22	.GASKET - (V07213)		1
-18	SPB20-16PS003	.RECEPTACLE - (V07213) (J44)		1
	10-150949-20	.GASKET - (V07213)		1
-19	SPB20-39PS003	.RECEPTACLE - (V07213) (J46)		1
	10-150949-20	.GASKET - (V07213)		1
-20	SPB16-8PS003	.RECEPTACLE - (V07213) (J30)		1
	10-150949-16	.GASKET - (V07213)		1
-21	10-37090-121	.RECEPTACLE - (V07213) (E5)		1
	10-36675-10	.GASKET - (V07213)		1
-22	10-260131-201	.RECEPTACLE - (V07213) (E6)		1
	10-36675-18	.GASKET - (V07213)		1
R	MS35206-230	.SCREW		42
	AN500A6-8	.SCREW		2
	AN960D6L	.WASHER		44
	MS21042L06	.NUT		44
R	MS35206-217	.SCREW		16
	AN960D4L	.WASHER		16
	MS21042L04	.NUT		16
	41-52014-802	.SWITCH INSTL - CANOPY EXTERNAL (IAW C-12-114-000/CF-337)		NP
	41A-52012	..SWITCH & BRACKET ASSY		1
-23	41A-50011-16	...BRACKET		1
-24	MS35489-6	...GROMMET		1
-25	MS24524-26 *	...SWITCH - (CANOPY EXT SELECTOR)		1
-26	MS24523-30 *	...SWITCH - (CANOPY EXT OPERATING)		1
	*	IAW C-12-114-000/CF-383		

	FIGURE AND INDEX NUMBER	GROUP	ELECTRICAL EQUIPMENT	EFFEC-TIVITY	UNITS PER ASSY
		MAJOR ASSEMBLY	COCKPIT ELECTRICAL EQUIPMENT		
		PART NUMBER	1 2 3 4 5 6 7 NOMENCLATURE		
	107 -	41A-57020	...HARNESS ASSY - (P2M PRESS DISCONNECT)		1
	-27	SP06E8-4P	....PLUG - (V77820) (P2M)		1
	-28	NAS623-3-2	..SCREW		2
		AN960PD8L	..WASHER		2
		41A-57019	.HARNESS ASSY - (J2M PRESS DISCONNECT)		1
	-29	SP00E8-4S	..RECEPTACLE - (V77820) (J2M)		1
R		MS35206-230	.SCREW		4
		AN960PD6L	.WASHER		4
		MS21042L06	.NUT		4
		41A-52013	.RELAY INSTL - CANOPY ACTUATOR		NP
		41A-52013-2	..RELAY BOX ASSY		1
	-30	41A-50011-14	...RELAY BOX		1
	-31	MS35489-9	...GROMMET		2
	-32	MS24166D1	...RELAY - (K1M & K2M)		2
		NAS1103-2	...BOLT		2
		AN960PD10L	...WASHER		2
		MS21042L3	...NUT		2
	-33	41A-50011-4	...COVER		1
	-34	MS21919WDG4	...CLAMP		1
	-35	NAS623-3-4	...SCREW		2
		AN960PD10L	...WASHER		2
	-36	NAS1103-2	..BOLT		3
		AN960PD10L	..WASHER		3
	-37	K41A-58028-70	..DECAL - (K1M)		1
	-38	K41A-58028-72	..DECAL - (K2M)		1
	-39	MS27212-1-5	.TERMINAL BLOCK ASSY - (TB21)		1
		S1307V1-5	.STRIP - (V88308)		1
R		MS35206-219	.SCREW		2
		AN960D4L	.WASHER		2
		MS21042L04	.NUT		2
		MS25227-1	.STRIP		2
		AN960-6	.WASHER		5
		MS21042L06	.NUT		5
		MS18029-1S5	.SHIELD		1
	-40	MS27212-1-5	.TERMINAL BLOCK ASSY - (TB113)	176-	1
		S1307V1-5	.STRIP - (V88308)	176-	1
		AN515-4R40	.SCREW	176-	2
		NAS43DD048	.SPACER	176-	2
		AN960D4L	.WASHER	176-	2
		MS21042L04	.NUT	176-	2
		MS25227-1	.STRIP	176-	2
		AN960-6	.WASHER	176-	5
		MS21042L06	.NUT	176-	5
		MS18029-1L5	.SHIELD	176-	1
R	-41	MS35207-265	.SCREW - (GROUND STUD N41 & N76)		2
		MS35335-32	.LOCK WASHER		2
		AN960-10L	.WASHER		4
		MS35338-43	.LOCK WASHER		4
		MS35650-302	.NUT		4
	-42	MS27212-1-4	.TERMINAL BLOCK ASSY - (TB53)		1
		S1307H1-4	.STRIP - (V88308)		1
R		MS35206-218	.SCREW		2
		MS21042L04	.NUT		2
		MS25227-1	.STRIP		1
		AN960-6	.WASHER		4
		MS21042L06	.NUT		4
	-43	MS18029-1L4	.SHIELD		1

	FIGURE AND INDEX NUMBER	GROUP	ELECTRICAL EQUIPMENT	EFFEC-TIVITY	UNITS PER ASSY
		MAJOR ASSEMBLY	COCKPIT ELECTRICAL EQUIPMENT		
		PART NUMBER	1 2 3 4 5 6 7 NOMENCLATURE		
	107 -	41A-57148	.HARNESS ASSY - DC VOLTAGE REGULATOR		1
	-44	CP53B1EF205K1	..CAPACITOR		2
R	-45	MS35207-264	.SCREW		3
		AN960PD10L	.WASHER		3
R	-46	MS35206-245	.SCREW		4
		AN960PD8L	.WASHER		4
		41A-42218	.PANEL INSTL - DC REGULATOR CONTROL		NP
	-47	3S2060DC126B1	..REGULATOR ASSY - (GEC) (CONTROL PANEL) FOR BRKDN SEE C-17-198-000/MZ-000 (IAW C-17-198-000/CF-001)		1
	-48	MS18029-2L3	..SHIELD - (IAW C-12-114-000/CF-284)		1
R	-49	MS35207-263	..SCREW		4
		41A-43011	.HARNESS INSTL - ELECTRICAL		NP
R	-50	MS35206-245	..SCREW - (GROUND STUD N25, N26, N65, N66, N108 & 109)		6
		MS35335-32	..LOCK WASHER		6
	-51	NAS43DD3-48	..SPACER		6
		AN960-10L	..WASHER		12
	-52	MS25226-4-2	..BUS - (BETWEEN GROUND STUD N108 & N109)		1
		MS35338-43	..LOCK WASHER		12
		AN345-10	..NUT		12
R	-53	MS35206-245	..SCREW		16
		MS21042L08	..NUT		14
		SL88-832-38-09	..CLIPNUT - (V97393)		2
		41A-35037-2	WEB ASSY - AFT PRESSURE BULKHEAD LOWER (SEE SECTION 3)		REF
	-54	41A-35037-202	.BRACKET - MOUNTING (TB53)		1
	-55	41A-35037-200	.ANGLE - TB MOUNTING SUPPORT		1
	-56	SP00E12-83S(003)	RECEPTACLE - (J34 COCKPIT PRESSURE DISC RH) (SEE FIG. 114)		REF
	-57	SP00W10-6P(003)	RECEPTACLE - (J20 FUS STA149 BULKHEAD & J40 COCKPIT PRESSURE DISCONNECT LH) (SEE FIG. 114)		REF
	-58	T1-1131 *	TRANSISTOR - (01295) (LCUQ1 LCU Q2 LCU Q3)		3
	-59	918604 *	WASHER - INSULATOR		6
R	-60	S1246AB16-22-63 *	WASHER		6
	-61	MS18029-23 *	NUT ASSY		3
		7940104 *	DECAL - (LCU Q1)		1
		7940103 *	DECAL - (LCU Q2)		1
		7940102 *	DECAL - (LCU Q3)		1
		8140316-X **	BRACKET INSTL - RELAY MOUNTING		NP
	-62	8140309-1 **	.BRACKET ASSY - RELAY		1
	-63	MS35206-245 **	.SCREW		2
		AN960PD8L **	.WASHER		2
	-64	M83726/3-016 **	.RELAY - LOW FUEL QTY WARNING TIME DELAY		1
R	-65	MS35206-361 **	.SCREW		3
		AN960D6 **	.WASHER		3
	-66	YD4N	RELAY	A	1
	-67	MS2712-1-12	TERMINAL BLOCK ASSY	A	1
	-68	501-1361-03 ***	MONITOR - ENGINE LIFE		1
	-69	MS27039-1-07 ***	SCREW		4
	-70	MS3476L14-12S ***	CONNECTOR		1
		MS3417-14N ***	CLAMP - CONNECTOR		1

-OOO-

* IAW C-12-114-000/CF-445
** IAW C-12-114-000/CF-437
*** IAW C-12-114-000/CF-469
A FOR SNOWBIRD AIRCRAFT ONLY

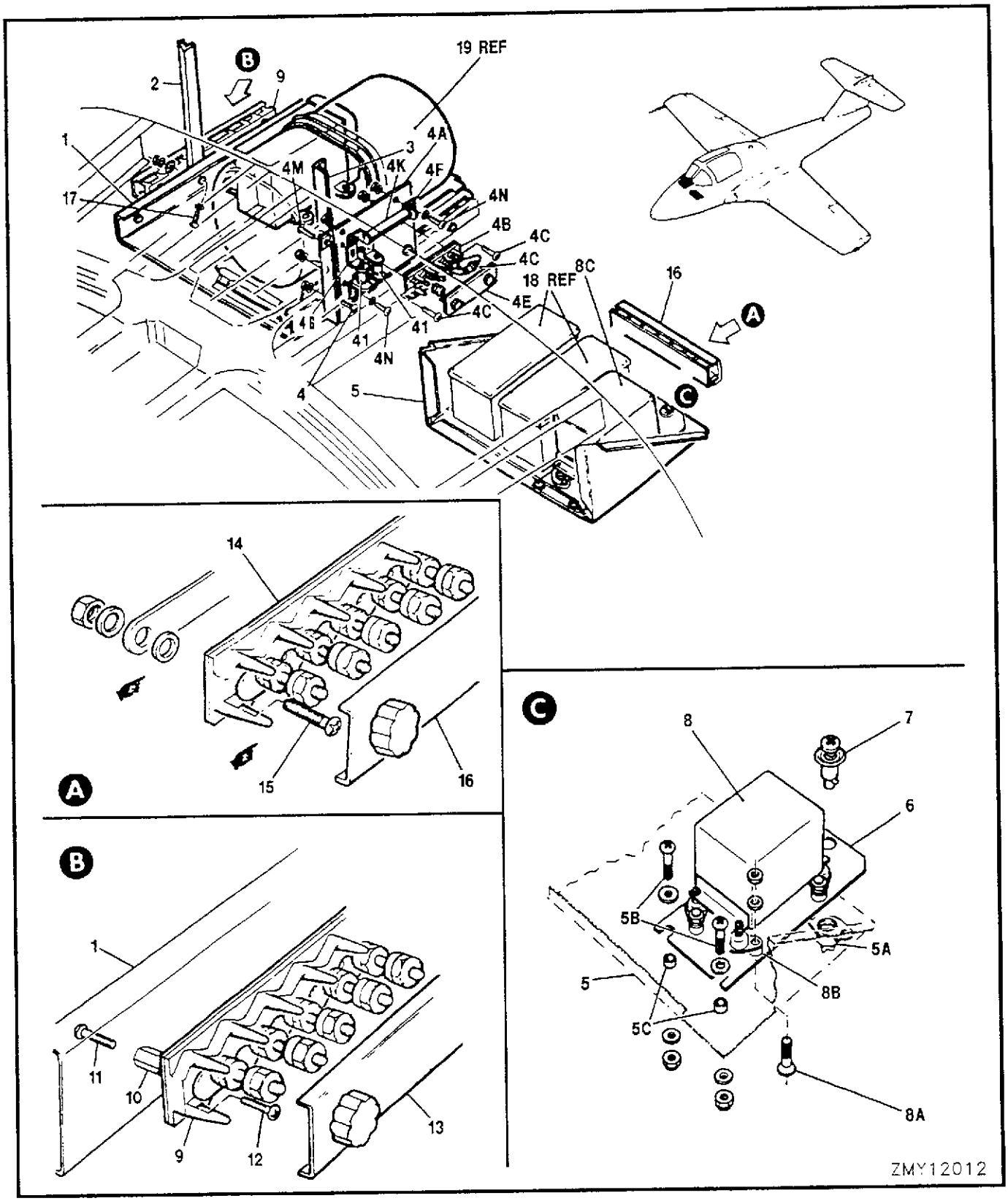

FIGURE 108 FORWARD COCKPIT ELECTRICAL EQUIPMENT

	FIGURE AND INDEX NUMBER	GROUP	ELECTRICAL EQUIPMENT	EFFEC-TIVITY	UNITS PER ASSY
		MAJOR ASSEMBLY	FORWARD COCKPIT ELECTRICAL EQUIPMENT		
		PART NUMBER	1 2 3 4 5 6 7 NOMENCLATURE		
	108 -	41A-42203 *	ELECTRICAL & ELECTRONIC EQUIP INSTL - FUS STA 149 BULKHEAD (MODIFIED) (SEE FIG. 107)		NP
	- 1	41A-42205-4	.PLATE - SUPPORT		1
	- 2	41A-42205-6	.ANGLE - SUPPORT		1
	- 3	41A-42205-8	.ANGLE - SUPPORT		1
R	- 4	MS35207-262	.SCREW		6
		AN960PD10L	.WASHER		6
		MS21042L3	.NUT		6
		41A-42203-70	.PANEL ASSY - LANDING GEAR WARNING LIGHTS		1
	- 4A	41A-42205-30	..PANEL		1
	- 4B	MS27212-1-5	..TERMINAL BLOCK ASSY - (TB9)		1
		S1307H1-5	..STRIP		1
R	- 4C	MS35206-215	..SCREW		2
		AN960D4L	..WASHER		2
		MS21083N03	..NUT		2
	- 4D	JAN1N540	..DIODE		1
		S1244B30-1	..CONDUIT - (V88308)		2
		MS25227-1	..STRIP		2
		AN960-6	..WASHER		5
		MS21042L06	..NUT		5
	- 4E	MS18029-1S5	..SHIELD		1
	- 4F	MS75009-33	..BRACKET ASSY		1
	- 4G	MS75009-30	..BRACKET ASSY		2
R	- 4H	MS35206-242	..SCREW		6
		AN960D8L	..WASHER		6
		MS21042L08	..NUT		6
		41A-57155	..HARNESS ASSY - LANDING GEAR WARNING RESISTOR PANEL		1
	- 4J	RW30G160	...RESISTOR - (V75042) (RIG & R3G)		2
	- 4K	RW33G400	...RESISTOR - (V75042) (R2G)		1
R	- 4M	MS35206-242	.SCREW		1
		AN960D8L	.WASHER		1
		MS21042L08	.NUT		1
		41A-42205-28	.BRACKET ASSY - SUPPORT		1
	- 5	41A-42205-26	..BRACKET - SUPPORT		1
	- 5A	212-12ND	..RECEPTACLE - (V08179)		1
R	- 5B	MS35206-245	..SCREW		2
	- 5C	NAS43HT3-4	..SPACER		2
		S1246-11-15-63	..WASHER - (V88308)		4
		MS21042L08	..NUT		2
		41A-42203-62	.CONTROL ASSY - AIR TEMPERATURE		1
	- 6	41A-42205-18	..PLATE - (AIR TEMPERATURE CONTROL BASE)		1
	- 7	26S8-3	..STUD - (V08179)		1
	- 8	45958-10	..CONTROL - (V08179) (AIR TEMPERATURE) (AS PER 41A-95105) FOR BRKDN SEE C-17-901-000/MS-000		
	- 8A	MS24693-52	..SCREW		8
	- 8B	NAS43DD1-20	..SPACER		8
		AN960D6L	..WASHER		8
		MS21042L06	..NUT		8
	- 9	MS27212-1-10	.TERMINAL BLOCK ASSY - (TB10)		1
		S1307H1-10	.STRIP - (V88308)		1
	-10	S1331A2	.POST - (V88308)		2
R	-11	MS35206-243	.SCREW		2
		MS35335-31	.LOCK WASHER		2
R	-12	MS35206-215	.SCREW		2
		MS35338-40	.LOCK WASHER		2
		MS25227-1	.STRIP		2
		AN960-6	.WASHER		10
		MS21042L06	.NUT		10
	-13	MS18029-1S10	.SHIELD		1
		*	IAW C-12-114-000/CF-139		

FIGURE AND INDEX NUMBER	GROUP	ELECTRICAL EQUIPMENT	EFFEC-TIVITY	UNITS PER ASSY
	MAJOR ASSEMBLY	FORWARD COCKPIT ELECTRICAL EQUIPMENT		
	PART NUMBER	1 2 3 4 5 6 7 NOMENCLATURE		
108 -14	MS27212-1-10	.TERMINAL BLOCK ASSY - (TB11)		1
	S1307H1-10	.STRIP - (V88308)		1
-15	MS35206-215	.SCREW		2
	AN960D4L	.WASHER		2
	MS21042L04	.NUT		2
	MS25227-1	.STRIP		2
	MS25226-2-2	.BUS - (ON POST 6-7 & 8-9)		2
	AN960-6	.WASHER		10
	MS21042L06	.NUT		10
-16	MS18029-1S10	.SHIELD		1
R -17	MS35207-265	.SCREW - (GROUND STUD N13, N14,N101 & N102)		4
	MS35335-32	.LOCK WASHER		4
	AN960-10L	.WASHER		8
	MS35338-43	.LOCK WASHER		8
	MS35650-302	.NUT		8
-18	AM5186/AIC502	AMPLIFIER - (SEE SECTION 13)		REF
-19	124623-01	GYRO - VERTICAL (SEE SECTION 14)		REF
		-OOO-		
	*	IAW C-12-114-000/CF-477		

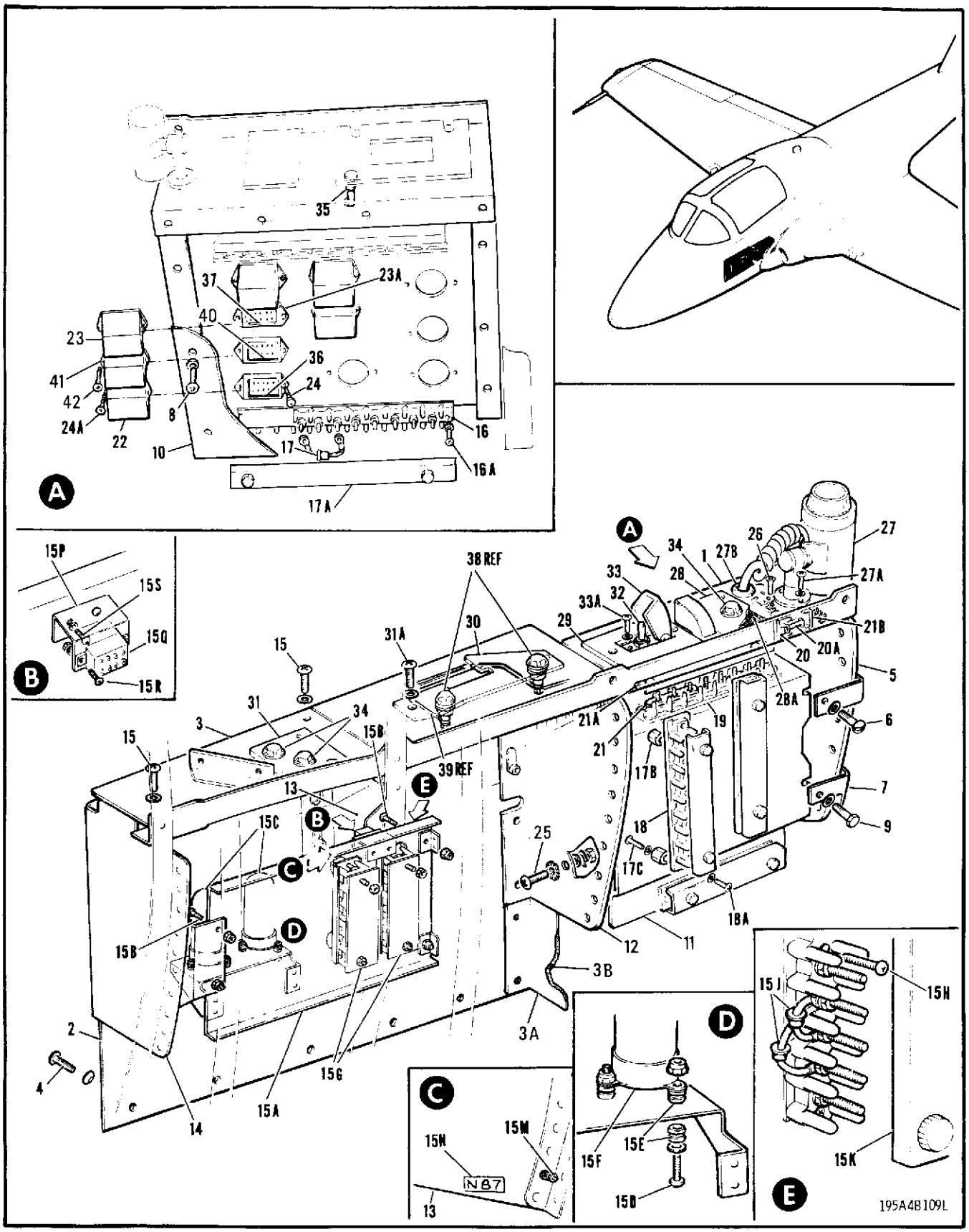

FIGURE 109 PORT CONSOLE ELECTRICAL EQUIPMENT

	FIGURE AND INDEX NUMBER	GROUP	ELECTRICAL EQUIPMENT	EFFEC-TIVITY	UNITS PER ASSY
		MAJOR ASSEMBLY	PORT CONSOLE ELECTRICAL EQUIPMENT		
		PART NUMBER	1 2 3 4 5 6 7 NOMENCLATURE		
	109 -	41A-52023 *	ELECTRICAL EQUIP INSTL - LH CONSOLE (SEE FIG. 107)		NP
		41A-42204-804	.CONSOLE STRUCTURE INSTL - LH		NP
	- 1	41A-42204-2	..PANEL ASSY - LH CONSOLE (I)		1
	- 2	41A-42204-30	..PLATE - FACE (I)		1
	- 3	41A-42204-4	..PANEL ASSY - (I)		1
	- 3A	NO NUMBER	..PANEL - FLOOR BLANKING		1
	- 3B	NO NUMBER	..CHANNEL - RUBBER		AR
	- 4	MS24693-49	..SCREW		16
		A3135-017-24A	..WASHER - (V78533)		16
	- 5	41A-42204-6	..WEB ASSY		1
R	- 6	MS35206-244	..SCREW		3
		AN960D8L	..WASHER		3
		SL100-08	..CLIPNUT - (V97393)		1
	- 7	41A-42204-42	..ANGLE		1
	- 8		DELETED		
	- 9	AN3-3A	..BOLT		1
		AN960D10L	..WASHER		1
		RM52LHA4972-6-02	..CLIPNUT - (V97393)		1
	-10	41A-42204-16	..PLATE - COVER (I)		1
	-11	41A-42204-38	..PANEL - RELAY		1
	-12	41A-42204-8	..WEB ASSY		1
	-13	41A-42204-34	..WEB		1
	-14	41A-42204-14	..WEB		1
R	-15	MS35206-227	..SCREW		28
		AN960D6L	..WASHER		28
		SL201-4AA11	..CLIPNUT - (V97393)		24
	-15A	41A-42204-150	..PANEL ASSY - RELAY		1
R	-15B	MS35206-244	..SCREW		4
		AN960D8L	..WASHER		4
		SL201-5AA11	..CLIPNUT		4
	-15C	26N015	.RELAY - (V70563) (K7HA & K8HA)		2
R	-15D	MS35206-231	.SCREW		6
	-15E	MS35489-4	.GROMMET		12
		AN960D6L	.WASHER		12
		MS21042L06	.NUT		6
	-15F	33087C	.CLAMP - (V76487)		2
	-15G	MS27212-1-6	.TERMINAL BLOCK ASSY - (TB55 & TB56)		2
		S1307V1-6A	.STRIP - (V88308) (TB55)		1
		S1307V1-6	.STRIP - (V88308) (TB56)		1
R	-15H	MS35206-215	.SCREW		4
		AN960D4L	.WASHER		4
		MS21042L04	.NUT		4
		MS25227-1	.STRIP		4
	-15J	JAN1N540	.DIODE - (TB55 POST 3-4-5)		2
		AN960-6	.WASHER		12
		MS21042L06	.NUT		12
	-15K	MS18029-1S6	.SHIELD		2
R	-15M	MS35207-265	.SCREW - (N87)		1
		MS35335-32	.LOCK WASHER		1
		AN960-10L	.WASHER		2
		MS35338-43	.LOCK WASHER		2
		MS35650-302	.NUT		2
	-15N	K41A-59023-54	.DECAL - (N87)		1
		41A-57156	.HARNESS ASSY - LH CONSOLE FWD RELAY PANEL		1
		41A-42219	..RELAY ASSY		1
	-15P	41A-42219-2	...CHANNEL - RELAY MTG		1
	-15Q	RY4NA3B3L01	...RELAY - (K3C)		1
		*	IAW C-12-114-000/CF-033, 368 & NS-084		

	FIGURE AND INDEX NUMBER	GROUP	ELECTRICAL EQUIPMENT	EFFEC-TIVITY	UNITS PER ASSY
		MAJOR ASSEMBLY	PORT CONSOLE ELECTRICAL EQUIPMENT		
		PART NUMBER	1 2 3 4 5 6 7 NOMENCLATURE		
R	109 -15R	MS35206-203	...SCREW		2
		MS35333-35	...LOCK WASHER		2
		MS35649-222	...NUT		2
		77M1P8	..SOCKET - (V02660) (ZONE 2 COOLING IND J1HA & J2HA)		2
R	-15S	MS35206-214	.SCREW		2
		AN960D4L	.WASHER		2
	-16	MS27212-1-12	.TERMINAL BLOCK ASSY - (TB 29)		1
		S1307H1-12	.STRIP - (V88308)		1
R	-16A	MS35206-219	.SCREW		2
		NAS43DD1-16	.SPACER		2
		AN960D4L	.WASHER		2
		MS21042L04	.NUT		2
		MS25227-2	.STRIP		2
	-17	JAN1N540	.DIODE		4
		AN960-6	.WASHER		12
		MS21042L06	.NUT		12
	-17A	MS18029-1S12	.SHIELD		1
	-17B	S1331A2	.POST - (V88308)		4
R	-17C	MS35206-215	.SCREW		4
		MS35338-40	.LOCK WASHER		4
	-18	MS27212-1-10	.TERMINAL BLOCK ASSY - (TB34 & TB35)		2
		S1307V1-10	.STRIP - (V88308)		1
		S1307V1-10A	.STRIP - (V88308)		1
R	-18A	MS35206-243	.SCREW		4
		MS35335-31	.LOCK WASHER		4
		AN960-6	.WASHER		20
		MS25227-1	.STRIP		4
		MS21042L06	.NUT		20
	-19	MS27212-1-10	.TERMINAL BLOCK ASSY - (TB23)		1
	-20	MS27212-1-2	.TERMINAL BLOCK ASSY - (TB22)		1
		S1307H1-10	.STRIP - (V88308) (TB23)		1
		S1307H1-2	.STRIP - (V88308) (TB22)		1
R	-20A	MS35206-217	.SCREW		4
		AN960D4L	.WASHER		4
		MS21042L04	.NUT		4
		MS25227-1	.STRIP		4
	-21	MS25226-2-3	.BUS - (TB23 POST 1-3)		1
		AN960-6	.WASHER		12
		MS21042L06	.NUT		12
	-21A	MS18029-1S10	.SHIELD - (TB23)		1
	-21B	MS18029-1S2	.SHIELD - (TB22)		1
	-22	9228-4424	.RELAY - (V35344) (K3G)		1
	-23	9220-4249	.RELAY - (V35344) (K1C, K2C, K1G & K2G)		4
	-23A	Q1157-2	.GASKET - (V35344)		4
	-24	S1338-1	.BOLT - (V88308)		10
R	-24A	MS35206-217	.SCREW		10
		MS35333-36	.LOCK WASHER		10
		MS21042L04	.NUT		10
R	-25	MS35207-265	.SCREW - (N106 GND STUD)		1
		MS35335-32	.LOCK WASHER		1
		AN960-10L	.WASHER		2
		MS35338-43	.LOCK WASHER		2
		MS35650-302	.NUT		2
	-26	MS24693-52	.SCREW - (N53 GND STUD)		1
		AN960-6	.WASHER		2
		MS35338-41	.LOCK WASHER		2
		MS35649-262	.NUT		2
	-27	MS17245-5	.LIGHT ASSY		1
		MS25231-313	.LAMP		1
R	-27A	MS35206-230	.SCREW		2
		AN960D6L	.WASHER		2
		MS21042L06	.NUT		2
	-27B	MS35489-6	.GROMMET		1

FIGURE AND INDEX NUMBER	GROUP	ELECTRICAL EQUIPMENT	EFFEC-TIVITY	UNITS PER ASSY
	MAJOR ASSEMBLY	PORT CONSOLE ELECTRICAL EQUIPMENT		
	PART NUMBER	1 2 3 4 5 6 7 NOMENCLATURE		
109 -28	41-50725	.PANEL - (RAU) (ELEVATOR TRIM LIGHTING)		1
-28A	41A-52023-86	.GASKET - RUBBER		1
-29	41-50726	.PANEL ASSY - (RAU) (AILERON TRIM LIGHTING)	001-025	1
	41-50726-10	.PANEL ASSY - (RAU) (AILERON TRIM LIGHTING)	026-	1
	CM8-627	..LAMP		2
-30	41A-50728	.PANEL - (RAU) (THROT & FLAP CONT LIGHTING)		1
-31	41A-50761	.PANEL - LIGHTING (STALL WARNING)		1
R -31A	MS35206-230	.SCREW		7
	S1426-6	.WASHER - (V88308)		7
-32	MS25128-1	.SWITCH		2
-33	8916K703	.GUARD - (V15605)		2
R -33A	MS35206-229	.SCREW		4
	AN960D6L	.WASHER		4
-34	A7165-1	.LIGHT ASSY - (V72914)		3
	MS25237-327	.LAMP		3
-35	107A	.CONNECTOR - (V04211)		1
	41A-57142-802	.HARNESS ASSY - PORT CONSOLE RELAY PANEL		1
-36	S0-1019-7125	..SOCKET - (V35344)		1
-37	SO1000	..SOCKET - (V35344) (ELEVATOR & AIL OVERRIDE RELEASE J1C & J2C & MLG DOWN & UPLOCK RELEASE J1G & J2G)		4
-38	A7165-1-327	LIGHT ASSY - (SEE SECTION7)		REF
-39	41A-90752-52	HARNESS ASSY - (SEE SECTION 7)		REF
	K41A-58029 *	KIT - COCKPIT RECONFIGURATION AUX FUEL (SEE FIG. 115)		REF
-40	MS25324-4	.SOCKET		1
	MS25332-1	.STUD ASSY		2
	MS21042-3	.NUT		2
-41	MS25325D2	.RELAY - (K1AA)		1
	AN935-5L	.LOCK WASHER		2
-42	MS35206-215	.SCREW		2
	K41A-58029-8	.DECAL		1
		-OOO-		
	*	IAW C-12-114-000/CD-031		

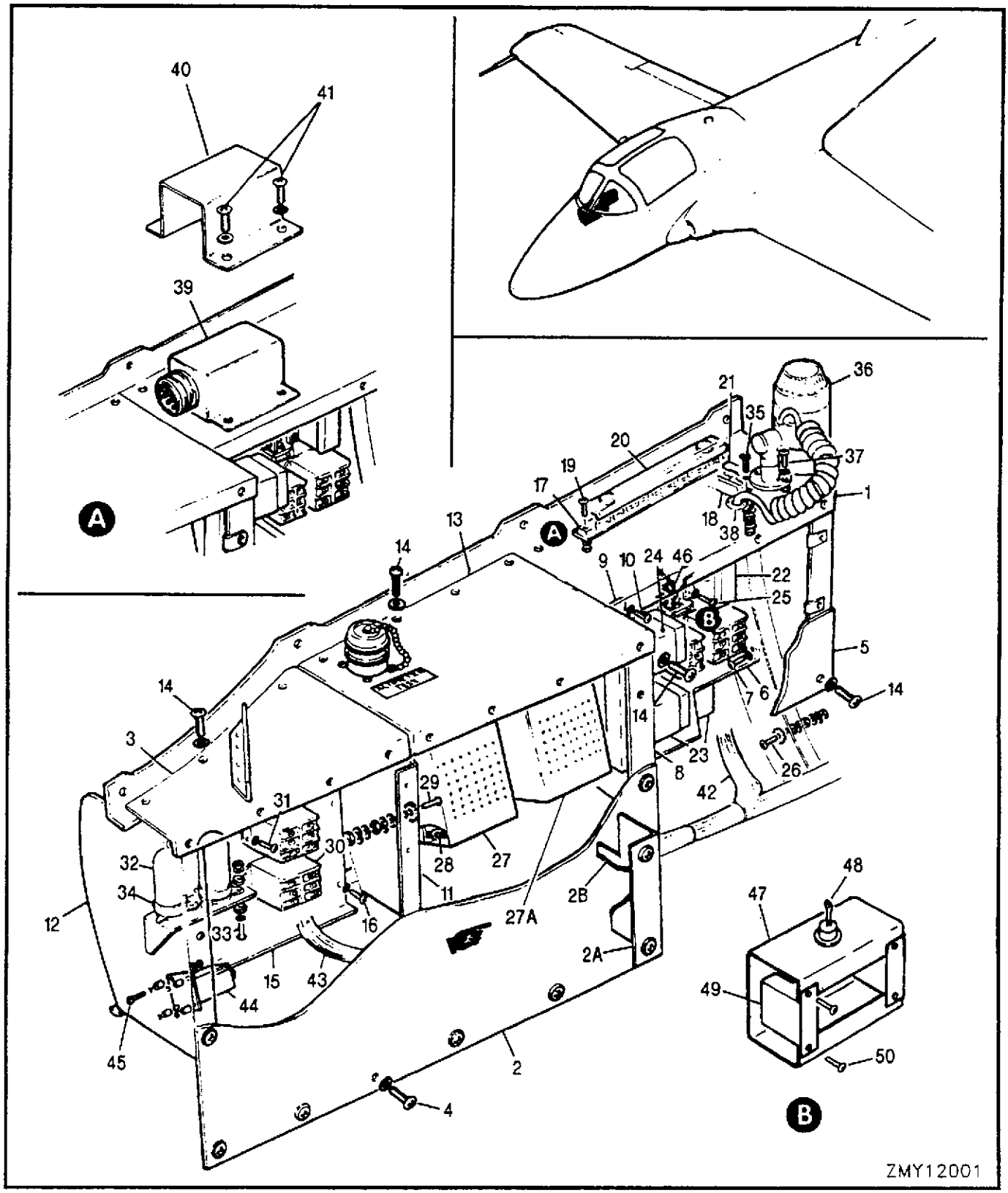

FIGURE 109A STARBOARD CONSOLE ELECTRICAL EQUIPMENT

FIGURE AND INDEX NUMBER	GROUP	ELECTRICAL EQUIPMENT	EFFEC-TIVITY	UNITS PER ASSY
	MAJOR ASSEMBLY	STARBOARD CONSOLE ELECTRICAL EQUIPMENT		
	PART NUMBER	1 2 3 4 5 6 7 NOMENCLATURE		
109A -	41A-52024 *	ELECTRICAL EQUIP INSTL - RH CONSOLE (MOD) (SEE FIG. 107)		NP
	41A-42204-807	.CONSOLE STRUCTURE INSTL - RH		NP
- 1	41A-42204-140	..PANEL ASSY - RH CONSOLE (I)		1
- 2	41A-42204-48	..PLATE - FACE (I)		1
- 2A	NO NUMBER	..PANEL - FLOOR BLANKING		1
- 2B	NO NUMBER	..CHANNEL - RUBBER		AR
- 3	41A-42204-5	..PANEL ASSY - (I)		1
R - 4	AN507-832R7	..SCREW		21
R	A3135-017-24A	..WASHER - (V78553)		21
- 5	41A-42204-17	..PLATE - COVER (I)		1
- 6	41A-42204-126	..PANEL ASSY - (RELAY)		1
- 7	MS35207-263	..SCREW		2
	AN960D10L	..WASHER		2
	RM52LHA4972-6-02	..CLIPNUT - (V97393)		2
- 8	41A-42204-10	..WEB ASSY		1
- 9	41A-42204-52	..ANGLE		1
-10	MS35206-244	..SCREW		4
	AN960D8L	..WASHER		4
	SL201-5AA11	..CLIPNUT - (V97393)		4
-11	41A-42204-12	..WEB ASSY		1
-12	41A-42204-15	..WEB		1
-13	C72C47115-1 **	..PANEL ASSY - SERVOED ALTIMETER TEST (SEE FIG. 129)		REF
-14	MS35206-227	..SCREW		39
	AN960D6L	..WASHER		39
	SL201-4AA11	..CLIPNUT - (V97393)		39
-15	41A-42204-102	..PANEL ASSY - (RELAY)		1
-16	MS35206-244	..SCREW		4
	AN960D8L	..WASHER		4
	SL201-5AA11	..CLIPNUT - (V97393)		4
-17	MS27212-1-7	.TERMINAL BLOCK ASSY - (TB15)		1
-18	MS27212-1-2	.TERMINAL BLOCK ASSY - (TB24)		1
	S1307H1-7	.STRIP - (TB15)		1
	S1307H1-2	.STRIP - (TB24)		1
-19	MS35206-217	.SCREW		4
	AN960D4	.WASHER		4
	MS21042L04	.NUT		4
	MS25227-1	.STRIP		4
	MS25226-2-2	.BUS - (TB15 POST 1-2)		1
	AN960-6	.WASHER		9
	MS21042L06	.NUT		9
-20	MS18029-1S7	.SHIELD - (TB15)		1
-21	MS18029-1S2	.SHIELD - (TB24)		1
-22	41A-50780	.TRANSFORMER - INSTRUMENT POWER		1
-23	9330-4027	.RELAY - (V35344) (K1X & K2X)		2
-24	MS24149D1	.RELAY - (K1FC)		1
-25	MS35206-244	.SCREW		10
	AN960D8L	.WASHER		10
	SL100-08	.CLIPNUT - (V97393)		10
-26	MS35207-265	.SCREW - (N4, N5 & N6)		3
	MS35335-32	.LOCK WASHER		3
	AN960-10L	.WASHER		6
	MS35338-43	.LOCK WASHER		6
	MS35650-302	.NUT		3
	*	IAW C-12-114-000/CF-018, 033, 139, 311, 346, 357 & 368		
	**	IAW C-12-114-000/CF-357		

FIGURE AND INDEX NUMBER	GROUP	ELECTRICAL EQUIPMENT	EFFEC-TIVITY	UNITS PER ASSY
	MAJOR ASSEMBLY	STARBOARD CONSOLE ELECTRICAL EQUIPMENT		
	PART NUMBER	1 2 3 4 5 6 7 NOMENCLATURE		
R 109A -27	661102B	.POWER CONVERTER - (V09708) (NO. 1 PHASE ADAPTER) FOR BRKDN SEE C-16-242-A00/MN-000		1
-27A	661102B	.POWER CONVERTER - (V09708) (NO. 2 PHASE ADAPTER) FOR BRKDN SEE C-16-242-A00/MN-000		1
-28	MS35207-263	.SCREW		8
	AN960D10L	.WASHER		8
	RM52LHA4972-8-02	.NUT - (V72962)		8
-29	MS35207-265	.SCREW - (N82 & N84)		2
	MS35335-32	.LOCK WASHER		2
	AN960-10L	.WASHER		4
	MS35338-43	.LOCK WASHER		4
	MS3565-302	.NUT		4
-30	MS24568D1	.RELAY - (K6X & K7X)		2
-31	MS35206-244	.SCREW		8
	AN960D8L	.WASHER		8
	SL100-08	.CLIPNUT - (V97393)		8
-32	26C10	.RELAY - (V70563) (K4X & K5X)		2
-33	MS35206-231	.SCREW		6
	AN960D6L	.WASHER		12
	MS35489-4	.GROMMET		12
-34	33087C	.CLAMP - (V76487)		2
	MS21042L06	.NUT		6
-35	MS24693-30	.SCREW - (N52)		1
	AN960-6	.WASHER		2
	MS35338-41	.LOCK WASHER		2
	MS21042L06	.NUT		2
-36	MS17245-5	.LIGHT ASSY		1
	MS25231-313	.LAMP		1
-37	MS35206-230	.SCREW		2
	AN960D6L	.WASHER		2
	NAS679A06W	.NUT		2
-38	MS35489-6	.GROMMET		1
-39	1520-2	.SIGNAL - (WARNING AUDIBLE) (TYPE MA-1) FOR BRKDN SEE C-16-529-000/MF-000		1
		OR		
	1541	.SIGNAL - (V96238)		
		OR		
	1543	.SIGNAL - (V96238)		
-40	NO NUMBER	.GUARD - AUDIBLE WARNING SIGNAL UNIT (IAW C-12-114-000/CF-346)		1
-41	MS35206-228	.SCREW		4
	AN960D6L	.WASHER		4
-42	41A-57143-800	.HARNESS ASSY - RELAY PANEL		1
-43	41A-57146	.HARNESS ASSY - STBD CONSOLE		1
	77M1P8	..SOCKET - (V02660) (NO. 1 & 2 INVERTER XFR DELAY RELAY DISCON NECT J1X & J2X)		2
-44	28VS3C2	.RECTIFIER - (V94988) (TRANSFORMER)		1
-45	MS35206-247	.SCREW		4
	NAS43DD3-16	.SPACER		4
	AN960PD8L	.WASHER		4
	MS21042L08	.NUT		4
	41A-57150	.HARNESS ASSY - TB15 TO CR2P		1
-46	1N253	..DIODE - (CR2P)		1
-47	NO NUMBER *	.BRACKET		1
	MS35206-228 *	.SCREW		2
	MS21042L06 *	.NUT		2
-48	1N253 *	.DIODE		1
-49	M5757-10-141 *	.RELAY		2
-50	MS35206-203 *	.SCREW		4
	MS35333-35 *	.LOCK WASHER		4
	MS35649-224 *	.NUT		4
		-OOO-		
	*	IAW C-12-114-000/CF-311		

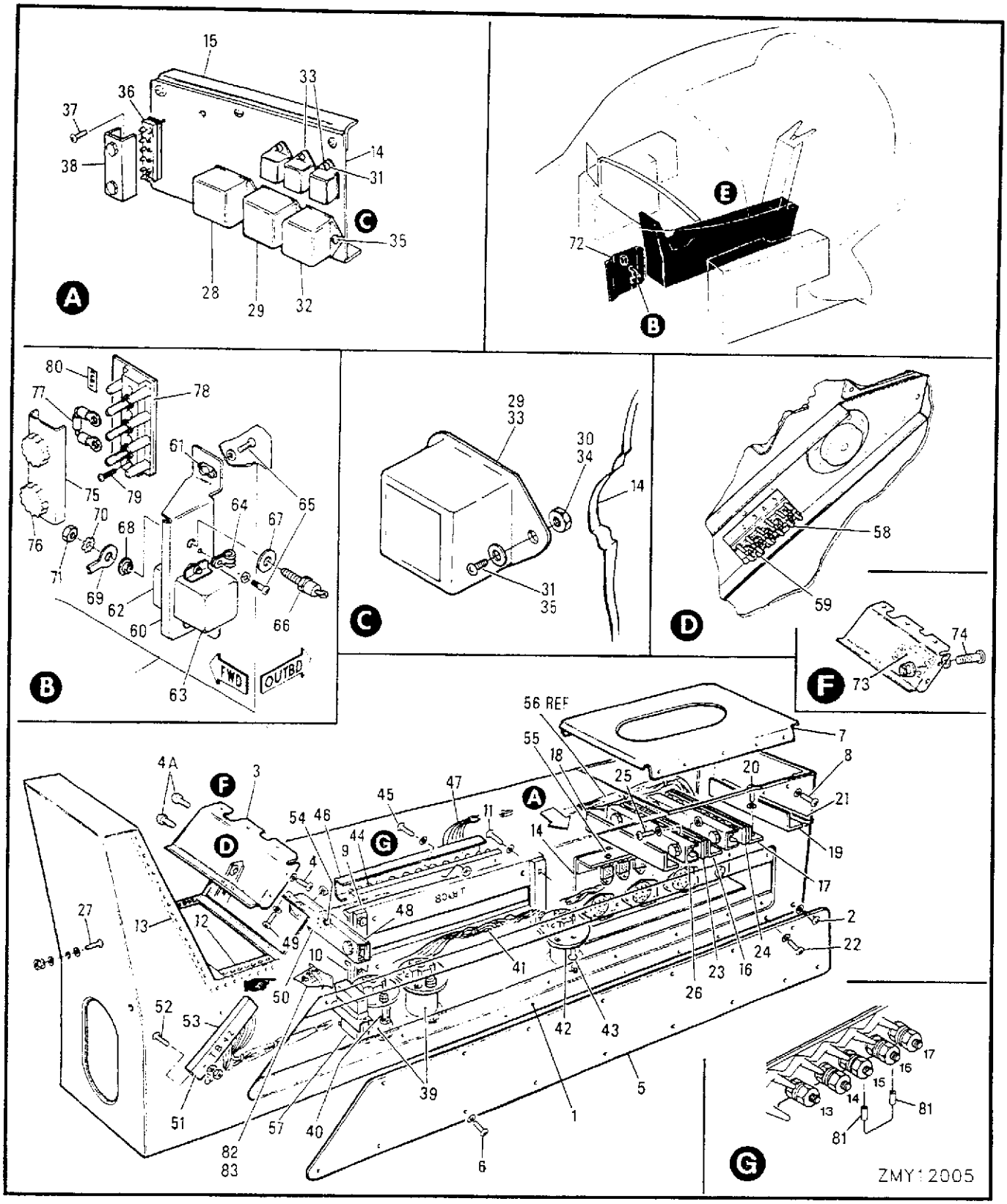

FIGURE 110 CENTRE CONSOLE ELECTRICAL EQUIPMENT

	FIGURE AND INDEX NUMBER	GROUP	ELECTRICAL EQUIPMENT	EFFEC-TIVITY	UNITS PER ASSY
		MAJOR ASSEMBLY	CENTRE CONSOLE ELECTRICAL EQUIPMENT		
		PART NUMBER	1 2 3 4 5 6 7 NOMENCLATURE		
	110 -	41A-52015 *	ELECTRICAL EQUIP INSTL - CTR CONSOLE (MOD) (SEE FIG. 107)		NP
		41A-52202	.CONSOLE STRUCTURE INSTL - CENTRE		NP
		41A-52202-800	..CONSOLE STRUCTURE ASSY - CENTRE		1
	- 1	41A-52202-6	...SHELF ASSY - CENTRE CONSOLE		1
R	- 2	MS35206-245	...SCREW		4
		AN960D8L	...WASHER		4
		41A-52202-8	...COVER ASSY		1
	- 3	41A-52202-50	....COVER		1
		SX560	....WIRE FORM - (V72794)		3
		AN960D2	....WASHER		6
R	- 4	MS35206-245	...SCREW		2
		AN960D8L	...WASHER		2
	- 4A	AN227-10BM6	...STUD		2
	- 5	41A-52202-12	...PANEL - ACCESS (I)		2
R	- 6	MS35206-245	...SCREW		34
		AN960D8L	...WASHER		34
	- 7	41A-52202-20	...DIAPHRAGM ASSY		1
R	- 8	MS35206-245	...SCREW		14
		AN960D8L	...WASHER		14
		SL201-5AA11	...CLIPNUT - (V97393)		14
	- 9	41A-52202-22	...CHANNEL		1
	-10	41A-52202-24	...CHANNEL		1
R	-11	MS35206-245	...SCREW		4
		AN960D8L	...WASHER		4
		SL201-5AA11	...CLIPNUT - (V97393)		4
		41A-52202-34	...STRIP		4
		41A-52202-52	...STRIP - RECEPTACLE		2
	-12	41A-52202-54	...STRIP - RECEPTACLE		2
	-13	41A-52202-56	...STRIP - RECEPTACLE		2
	-14	41A-52202-126	...PANEL		1
	-15	41A-52202-60	...ANGLE		1
	-16	41A-52202-64	...ANGLE		1
	-17	41A-52202-76	...ANGLE		1
	-18	41A-52202-118	...ANGLE ASSY		1
	-19	41A-52202-120	...ANGLE ASSY		1
R	-20	MS35206-245	...SCREW		17
		AN960D8L	...WASHER		17
		SL201-5AA11	...CLIPNUT - (V97393)		17
	-21	41A-52202-94	...STRIP		1
R	-22	MS35206-245	..SCREW		18
		AN960D8L	..WASHER		18
	-23	MS27212-1-8	.TERMINAL BLOCK ASSY - (TB2)		1
	-24	MS27212-1-8	.TERMINAL BLOCK ASSY - (TB4)		1
		S1307H1-8A	.STRIP - (V88308)		2
R	-25	MS35206-215	.SCREW		4
		AN960D4L	.WASHER		4
		MS21042L04	.NUT		4
		MS25227-1	.STRIP		4
		AN960-6	.WASHER		16
		MS21042L06	.NUT		16
	-26	MS18029-1S8	.SHIELD		2
R	-27	MS35207-265	.SCREW - (N7, N19, N22, N33, N34, N80, N81, N103 & N107)		9
		MS35335-32	.LOCK WASHER		9
		AN960-10L	.WASHER		18
		MS35338-43	.LOCK WASHER		18
		MS35650-302	.NUT		18
	-28	9225-4416	.RELAY - (V35344) (START GEN RESET CTL) (K8P)		1
	-29	9224-3951	.RELAY - (V35344) (STARTER CONTROL) (K7P)		1
	-30	S1338-10	.BOLT - (V88308)		3
		*	IAW C-12-114-000/CF-351		

	FIGURE AND INDEX NUMBER	GROUP	ELECTRICAL EQUIPMENT	EFFEC-TIVITY	UNITS PER ASSY
		MAJOR ASSEMBLY	CENTRE CONSOLE ELECTRICAL EQUIPMENT		
		PART NUMBER	1 2 3 4 5 6 7 NOMENCLATURE		
R	110 -31	MS35206-217	.SCREW		3
		MS35333-36	.LOCK WASHER		3
		MS21042L3	.NUT		3
	-32	9225-7221	.RELAY - (V35344) (K1K)		1
	-33	9220-4249	.RELAY - (V35344) (K2GA & K2K)		2
	-34	S1338-1	.BOLT - (V88308)		4
R	-35	MS35206-217	.SCREW		4
		MS35333-36	.LOCK WASHER		4
	-36	MS27212-1-5	.TERMINAL BLOCK ASSY - (TB1)		1
		S1307V1-5	.STRIP - (V88308)		1
R	-37	MS35206-215	.SCREW		2
		AN960D4L	.WASHER		2
		MS21042L04	.NUT		2
		MS25227-1	.STRIP		2
		MS25226-2-4	.BUS		1
		AN960-6	.WASHER		5
		MS21042L06	.NUT		5
	-38	MS18029-1S5	.SHIELD		1
	-39	MS24166D1	.RELAY - (K1L & K2L)		2
	-40	AN3-3A	.BOLT		4
		AN960D10L	.WASHER		4
		RM52LHA4972-6-02	.CLIPNUT - (V97393)		4
	-41	41A-57140-802	.HARNESS ASSY		1
	-42	MS24166D1	.RELAY - (K1Q)		1
	-43	AN3-3A	.BOLT		2
		AN960D10L	.WASHER		2
		RM52LHA4972-6-02	.CLIPNUT - (V97393)		2
	-44	MS27212-1-19	.TERMINAL BLOCK ASSY - (TB108 & TB109)		2
		MS25227-1	.STRIP		4
		MS25227-2	.STRIP		2
		S1307H1-19	.STRIP - (V88308)		2
R	-45	MS35206-215	.SCREW		6
		AN960D4L	.WASHER		6
		MS21042L04	.NUT		6
		MS21042L04	.NUT		6
		MS25226-2-3	.BUS - (TB108 POST 1-3)		1
		MS25226-2-2	.BUS - (TB109 POST 9-10)		1
		MS25226-2-6	.BUS - (TB109 POST 14-19)		1
		M39006-09-8615	.CAPACITOR ASSY - (TB 109 POSTS 3 & 6)		1
		AN960-6	.WASHER		38
		MS21042L06	.NUT		38
	-46	MS18029-1S19	.SHIELD		2
	-47	41A-70263-800	.HARNESS ASSY - INTERCOM CB PANEL		1
	-48	MS27212-1-8	.TERMINAL BLOCK ASSY - (TB111)		1
		S1307H1-8A	.STRIP - (V88308)		1
R	-49	MS35206-215	.SCREW		2
		AN960D4L	.WASHER		2
		MS21042L04	.NUT		2
		MS25227-1	.STRIP		2
		RC32GF680K	.RESISTOR - (V75042)		1
		RC32GF121K	.RESISTOR - (V75042)		1
		RC32GF221K	.RESISTOR - (V75042)		1
		RC32GF470K	.RESISTOR - (V75042)		2
		S1244B27-1	.CONDUIT - (V88308)		AR
		AN960-6	.WASHER		8
		MS21042L06	.NUT		8
	-50	MS18029-1S8	.SHIELD		1
	-51	MS27212-1-10	.TERMINAL BLOCK ASSY - (TB42)		1
		S1307H1-10A	.STRIP - (V88308)		1
R	-52	MS35206-215	.SCREW		2
		AN960D4L	.WASHER		2
		MS21042L04	.NUT		2
		MS25227-1	.STRIP		2
		AN960-6	.WASHER		10
		MS21042L06	.NUT		10

FIGURE AND INDEX NUMBER	GROUP: ELECTRICAL EQUIPMENT MAJOR ASSEMBLY: CENTRE CONSOLE ELECTRICAL EQUIPMENT PART NUMBER		1 2 3 4 5 6 7 NOMENCLATURE	EFFEC-TIVITY	UNITS PER ASSY
110 -53	MS18029-1S10		.SHIELD		1
-54	SS50726K2215		.BUTTON - (V09736)		2
	41A-57147		.HARNESS ASSY - (TB4 TO CRIP)		1
-55	1N253		..DIODE		1
-56	41A-57133		HARNESS ASSY - (SEE FIG. 114A)		REF
	41A-51212	*	RELAY & TERM BLOCK INSTL		NP
	41A-51212-2		.CHANNEL ASSY		1
	NAS43DD1-56		.SPACER		2
	MS35206-235		.SCREW		2
	AN960D6L		.WASHER		2
	SL200-4-411		.CLIPNUT - (V97393)		2
-57	MS27401-1		.RELAY - (K1RNV)		1
	MS35206-217		.SCREW		2
	AN960D4L		.WASHER		2
	41A-51212-6		.DECAL - (K1RNV)		1
-58	MS27212-1-5		.TERMINAL BLOCK - (TB115)		1
	S1307H1-5A		.STRIP - (V88308) IDENT		1
	MS35206-217		.SCREW		2
	AN960D4L		.WASHER		2
	NAS679A04W		.NUT		2
	MS25227-1A5		.STRIP		2
-59	RC32GF151K		.RESISTOR (POST 1 & 2)		1
	RC32G471K		.RESISTOR (POSTS 2 & 3 AND 2 & 5)		2
	AN960D6L		.WASHER		5
	MS21042L06		.NUT		5
	MS18029-1S5		.COVER		1
-60	NO NUMBER	*	BRACKET ASSY		1
-61	MS21076-08	*	NUTPLATE		2
-62	S0-1048-8977	*	SOCKET - (V35344)		1
R -63	TDH8070-2502	*	RELAY - TIME DELAY (V35344) (K20)		1
-64	MS21919WH3	*	CLAMP		1
-65	MS27039-0808	*	SCREW		3
	AN960PD8	*	WASHER		3
	MS21042L08	*	NUT		3
-66	1N1348A		DIODE - (CR3K)		1
-67	4681	*	WASHER - MICA		1
-68	B51547F012	*	BUSHING - TEFLON		1
-69	B52595F025	*	TAB - SOLDER		1
-70	AN46939	*	LOCK WASHER		1
-71	A50900-076	*	NUT		1
-72	41A-42210-5	*	PANEL - (MOD) (SEE FIG.133)		REF
	K41A-58037-2	*	START SYSTEM INSTL - 24V (SEE FIG. 105)		REF
-73	MS27400-21	*	.RELAY - SERIES CONTROL		1
-74	MS35206-228	*	.SCREW		4
	AN960C6L	*	.WASHER		4
	MS21043-06	*	.NUT		4
-75	MS18029-11S20	*	TB COVER		1
-76	MS18029-21	*	NUT ASSY		2
-77	JAN1N3611	*	DIODE - (CR2K)		1
-78	MS27212-1-20	*	TERMINAL BOARD - (TB99)		1
	S1307V1-20	*	STRIP IDENT		1
-79	MS35205-215	*	SCREW		2
	MS15795-203	*	WASHER		2
	MS3338-40	*	WASHER		2
	MS35649-242	*	NUT		2
-80	N1C	*	LABEL - (TB99)		1
	MS35338-41	*	WASHER		2
	AN960C6	*	WASHER		2
	MS35649-262	*	NUT		2
	K41A-58041-2		INTERCOM INSTL - (IAW C-12-114-000/CF-462) (SEE SECTION 13)		REF
-81	JAN1N3957		.DIODE - (CR2SX AND CR3SX) (V81349)		2
-82	9220-4249		RELAY (V35344) (IAW C-12-114-000/CF-521)		1
-83	S01000		SOCKET - RELAY (V35344) (IAW C-12-114-000/CF-521)		1
			-OOO-		
		*	IAW C-12-114-000/CF-458 & CF-467		

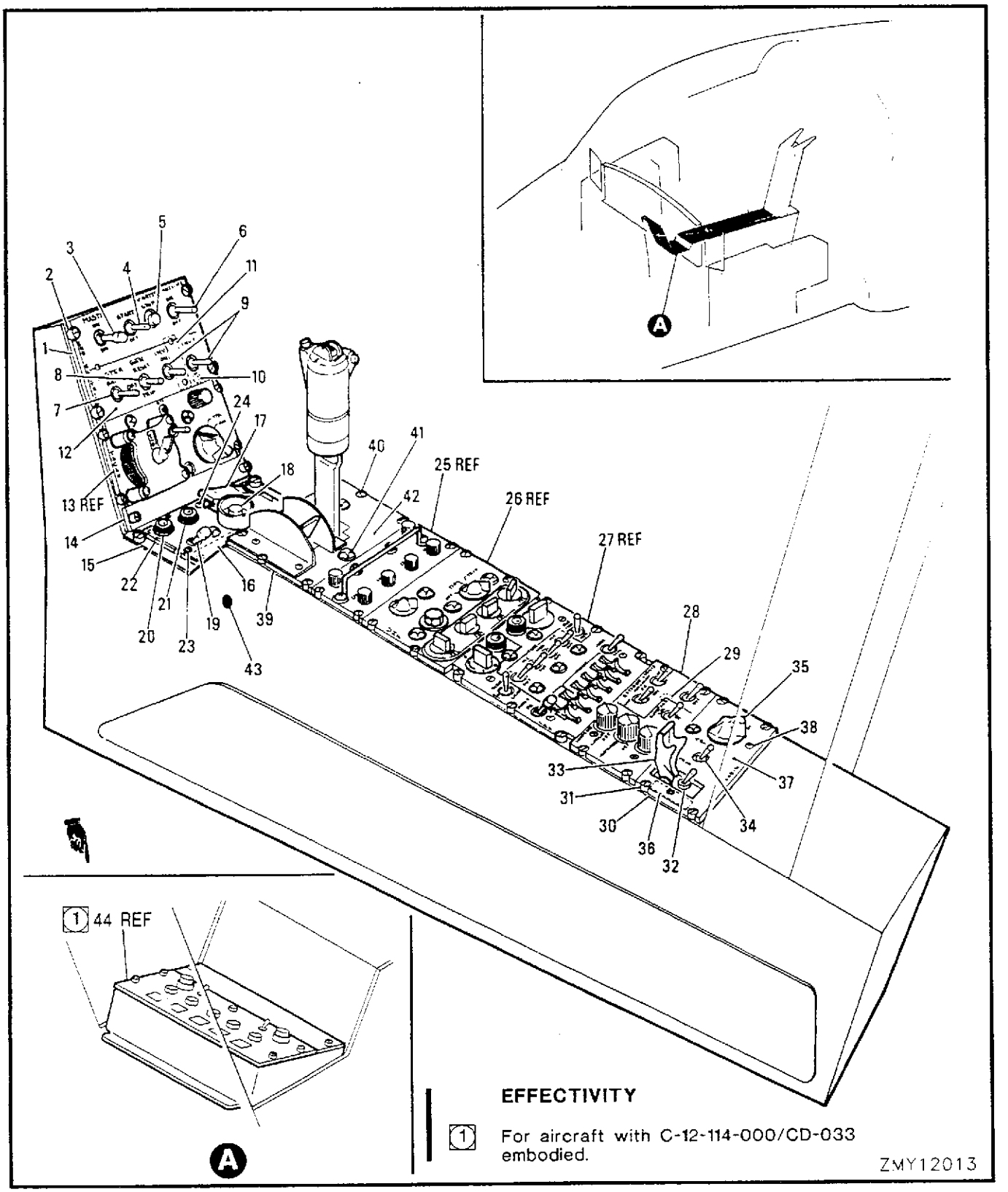

FIGURE 111 CENTRE CONSOLE ELECTRICAL EQUIPMENT

	FIGURE AND INDEX NUMBER	GROUP		ELECTRICAL EQUIPMENT	EFFEC-TIVITY	UNITS PER ASSY
		MAJOR ASSEMBLY		CENTRE CONSOLE ELECTRICAWL EQUIPMENT		
		PART NUMBER		1 2 3 4 5 6 7 NOMENCLATURE		
	111 -	K41A-58029	*	KIT - COCKPIT RECONFIGURATION AUX FUEL		NP
		41A-51210		.PANEL ASSY - ENGINE AND ELECTRICS		1
	- 1	41A-51202-6		..PANEL ASSY		1
	- 2	PFSC3-1/2-38		..FASTENER - (V72794)		4
	- 3	MS24660-23D		..SWITCH - (ENGINE MASTER)		1
	- 4	MS35059-26		..SWITCH - (ENGINE START)		1
	- 5	MS25089-3C		..SWITCH - (STARTER STOP)		1
	- 6	MS35059-23		..SWITCH - (ANTI ICING CONTROL)		1
	- 7	MS25068-21		..SWITCH - (DC MASTER)		1
	- 8	MS35059-27		..SWITCH - (GENERATOR CONTROL)		1
	- 9	MS35058-24		..SWITCH - (INVERTER NO. 1 & NO. 2)		2
	-10	107A		..CONNECTOR - (V04211)		1
	-11	MS27212-1-4		..TERMINAL BLOCK ASSY - (TB 49)		1
		S1331D4		..POST - (V88308)		2
		MS24693-28		..SCREW		2
		S1307H1-4		..IDENT STRIP - (V88308)		1
		MS35206L04		..SCREW		2
		AN960D4L		..WASHER		2
		AN960D6L		..WASHER		4
		MS21042L06		..NUT		4
		MS3373A1		..INSUL STRIP		2
		MS18029-1S4		..COVER ASSY		1
		41A-51210-4		..DECAL - (TB 49)		1
	-12	41A-50734		..PANEL - (RAU) (PLASTIC)		1
		CM8-627		...LAMP		1
		MS35214-27		..SCREW		4
		S1426-6		..WASHER - (V88308)		4
	-13	C5287/ARN504V		.CONTROL UNIT - (TACAN) (SEE FIG. 126)		REF
	-14	41A-51222		.PANEL ASSY - DIMMING RELAY & RESISTORS		1
		41A-51222-10		..PANEL		1
		PFCS3-1/2-38		...FASTENER - (V72794)		2
		1947-1		..TERMINAL - (K3105)		3
		MS35338-40		..WASHER		3
		MS24693-S2		..SCREW		3
		RW69G711		..RESISTOR		1
		JAN-1N3613		..DIODE		1
		41A-51222-2		..CHANNEL		1
		MS24693S26		..SCREW		1
		MS27401-1		..RELAY		1
		AN960D4L		..WASHER		2
		MS35206-213		..SCREW		2
		41A-51222-4		..DECAL		1
		41A-51222-6		..DECAL - (CR100 R7L)		1
		41A-51222-8		..DECAL - (K100L)		1
R	-15	41A-51209		.PANEL ASSY - AUX FUEL CONTROL	A	1
R		41A-51204-4		..PANEL ASSY	A	1
R		PFSC3-1/2-38		...FASTENER - (V72794)	A	4
R	-16	MS27212-1-6		..TERMINAL BLOCK ASSY - (TB 120)	A	1
R		S1307H1-6		..IDENT STRIP - (V88308)	A	1
R		AN960D6L		..WASHER	A	6
R		MS21042L06		..NUT	A	6
R		MS24693S4		..SCREW	A	2
R		AN960D4L		..WASHER	A	2
R		MS21042-04		..NUT	A	2
R		MS3373A1		..INSUL STRIP	A	2
R		JAN-1N3613		..DIODE - (CR1EF) (POST 3 & 4)	A	1
R		MS25036-102		..TERMINAL	A	2
R		41A-51209-28		..DECAL - (CR1EF)	A	1
R		MS25226-2-2		..BUS BAR - (POST 1 & 2 AND 5 & 6)	A	2
R		MS18029-1S6		..COVER ASSY	A	1
R		41A-51209-26		..DECAL - (TB120)	A	1
R	-17	MS24523-22		..SWITCH - (S3AA)	A	1
R		41A-51209-10		..GUARD	A	1
			*	IAW C-12-114-000/CD-031		
R			A	FOR AIRCRAFT WITHOUT C-12-114-000/CD-033 EMBODIED		

	FIGURE AND INDEX NUMBER	GROUP	ELECTRICAL EQUIPMENT	EFFEC-TIVITY	UNITS PER ASSY
		MAJOR ASSEMBLY	CENTRE CONSOLE ELECTRICAWL EQUIPMENT		
		PART NUMBER	1 2 3 4 5 6 7 NOMENCLATURE		
R	111 -18	MS25089-3CR	..SWITCH - (S2AA) A		1
R		A120-129	..GUARD - (V05402)	A	1
R	-19	MS24523-23G	..SWITCH - (S1EF)	A	1
R	-20	MS25041-4	..LIGHT ASSY	A	2
R	-21	MS25010B16A	..LIGHT ASSY	A	1
R		MS25237-327	..LAMP	A	1
R	-22	41A-50731	..PANEL - (PLASTIC)	A	1
R	-23	MS35214-27	..SCREW	A	2
R	-24	MS35273-30	..SCREW	A	1
R		S1426-6	..WASHER - (V88308)	A	3
	-25	C5140/AIC502	.CONTROL - (V81574) - (DUAL INTERCOM) (SEE FIG. 126)		REF
	-26	C5067/ARC522	.CONTROL UNIT - (UHF RADIO) (SEE FIG. 126)		REF
	-27	C6280P/APX77	.CONTROL UNIT - (IFF) (SEE FIG. 126)		REF
	-28	41A-50709	..CONTROL PANEL - INTERIOR & EXTERIOR		1
		41A-51208	..PANEL ASSY - LIGHTING CONTROL		1
		41A-50735	..PANEL - (RAU) PLASTIC		1
		MS35214-27	..SCREW		3
		S1426-6	..WASHER - (V88308)		3
	-29	PT06SE-18-32S **	.CONNECTOR - LIGHTING CONTROL DISCONNECT		1
		YE1620 **	.ADAPTER		12
		41A-52015	ELECTRICAL EQUIP INSTL - CTR CONSOLE (MOD) (SEE FIG. 110)		REF
		41A-52017-800	.PANEL ASSY - AIR CONDITIONING		1
	-30	41A-42206-20	..PANEL		1
	-31	PFSC3-1/2-8	..FASTENER - (V72794)		4
	-32	MS35059-23	..SWITCH - (SHUT-OFF & DUMP		1
	-33	MS25224-1	..GUARD		1
	-34	MS25128-1	..SWITCH - (TEMP CONTROL)		1
		41A-57144	..HARNESS ASSY		1
	-35	45000-14 *	...SELECTOR - (V70210) (IAW 41A-95104)		1
		RL07S113J *	...RESISTOR		1
	-36	MS27212-1-2	..TERMINAL BLOCK ASSY		1
		S1331D3	..POST - (V88308)		2
		MS24693-25	..SCREW		2
		S1307V1-2A	..STRIP - (V88308)		1
R		MS35206-214	..SCREW		2
		AN960-6	..WASHER		2
		MS21042L06	..NUT		2
		MS25227-1	..INSUL STRIP		2
		MS18029-1S2	..COVER		1
	-37	41A-50718	..PANEL - (RAU) PLASTIC		1
R	-38	MS35214-27	..SCREW		2
		S1426-6	..WASHER - (V88308)		2
		SL88-632-38-09	..CLIPNUT - (V97393)		2
		41A-52020	.PANEL ASSY - THROTTLE & FLAP		1
	-39	41A-42206-4	..PLATE ASSY		1
	-40	PFSC3-1/2-38	..FASTENER - (V72794)		7
	-41	A7165-1	..LIGHT ASSY		3
		MS25337-327	..LAMP		3
		41A-57139	..HARNESS ASSY		1
	-42	41A-50719	..PANEL - (RAU)		1
	-43	MS35489-6	GROMMET - (IAW C-12-114-000/CF-379)		1
		41A-72030-802	PANEL ASSY - UHF AUX CONTROL (SEE FIG. 126)		REF
R	-44	622-6813-001 ***	CONTROL UNIT - (DF-206A) (13499) (SEE SECTION 13)		REF
R		622-6813-003 ***	CONTROL UNIT - (DF-206A) (13499) (SEE SECTION 13)		REF
			-OOO-		
R		A	FOR AIRCRAFT WITHOUT C-12-114-000/CD-033 EMBODIED		
		*	IAW C-12-114-000/CF-402		
		**	IAW C-12-114-000/CF-407		
R		***	IAW C-12-114-000/CD-033		

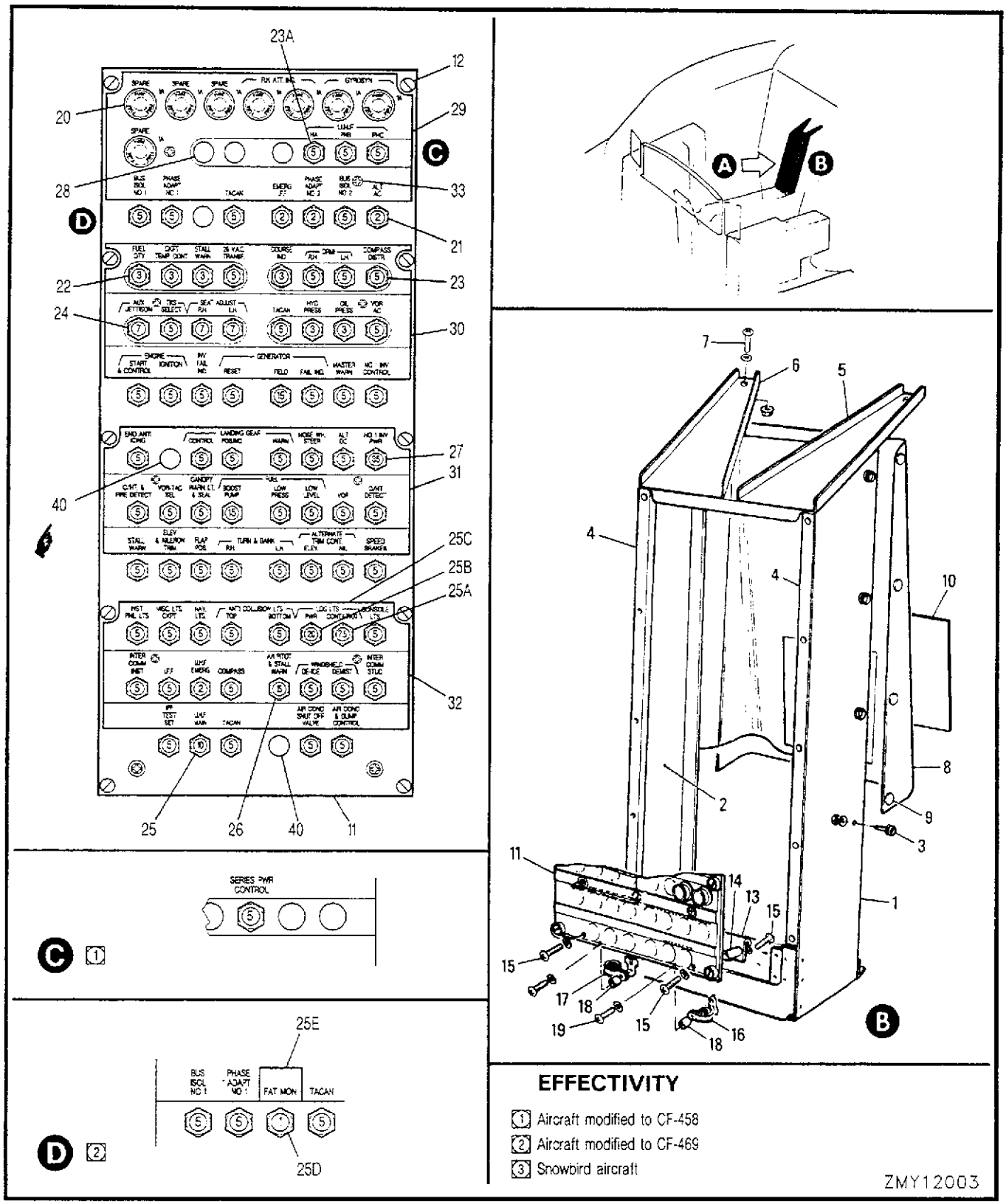

FIGURE 112 (SHEET 1) CENTRE CONSOLE CIRCUIT BREAKER PANEL

FIGURE AND INDEX NUMBER	GROUP	ELECTRICAL EQUIPMENT	EFFEC-TIVITY	UNITS PER ASSY
	MAJOR ASSEMBLY	(SHEET 1 OF 2) CENTRE CONSOLE CIRCUIT BREAKER PANEL		
	PART NUMBER	1 2 3 4 5 6 7 NOMENCLATURE		
0 -	41A-42201 *	PANEL INSTL - CIRCUIT BREAKER (MODIFIED) (SEE FIG. 107)		NP
- 1	41A-42201-2	.PANEL - (SIDE SUPPORT LH)		1
- 2	41A-42201-3	.PANEL - (SIDE SUPPORT RH)		1
- 3	MS27980-13C	.STUD		11
	AN960D8L	.WASHER		11
	MS21042L08	.NUT		11
- 4	S4901-01416	.STRIP - (V88308)		2
- 5	41A-42201-4	.CHANNEL		1
- 6	41A-42201-5	.CHANNEL		1
- 7	NAS623-3-1	.SCREW		6
	AN960PD10L	.WASHER		6
	MS21042L3	.NUT		2
	41A-41566	.COVER INSTL - CIRCUIT BREAKER PANEL BACK		NP
	41A-41566-2	..COVER ASSY - CIRCUIT BREAKER PANEL BACK		1
- 8	41A-41566-4	...COVER - BACK		1
R - 9	XX10129-A8-002	...BUTTON		11
-10	41A-41566-6	...PLATE		1
	41A-52018-806	.PANEL ASSY - CIRCUIT BREAKER		1
-11	41A-42202	..PANEL ASSY - CB MOUNTING		1
	107A	..CONNECTOR - (V04211)		4
	41A-57141-804	..HARNESS ASSY - CB PANEL WIRING		1
-12	PFSC3-1/2-38	..FASTENER - (V72794)		10
-13	41A-42202-4	..STRIP		1
-14	S1331E5	..POST - (V88308)		2
R -15	MS35206-243	..SCREW		4
	AN960D8	..WASHER		4
-16	MS21919WDG11	..CLAMP		1
-17	MS21919WDG18	..CLAMP		1
-18	NAS43DD3-32	..SPACER		2
R -19	MS35206-249	..SCREW		2
	AN960D8	..WASHER		2
	SL88-832-38-09	..CLIPNUT - (V97393)		2
-20	HKP	..HOLDER - (V71400) (FUSE)		8
	MDL-1	..FUSE - (V71400)		8
		DELETED - (IAW C-12-114-000/CF-515)		
-21	1500-059-2	..CIRCUIT BREAKER - (V76374) (2 AMP)		4
-22	1500-059-3	..CIRCUIT BREAKER - (V76374) (3 AMP)		6
-23	S1412-5	..CIRCUIT BREAKER - (V88308) (5 AMP)		54
-23A	MS26574-5	..CIRCUIT BREAKER - (CB14P)		1
-24	S1412-7	..CIRCUIT BREAKER - (V88308) (7.5 AMP)		3
-25	S1412-10 ***	..CIRCUIT BREAKER - (V88308) (10 AMP)		1
-25A	MS25244-7	..CIRCUIT BREAKER - (7.5 AMP)		1
-25B	MS25244-20	..CIRCUIT BREAKER - (20 AMP)		1
-25C	8040008	..DECAL - LANDING LIGHTS		1
-25D	MS22073-1 **	..CIRCUIT BREAKER - (1 AMP)		1
-25E	8525596-1 **	..DECAL - (FAT MON)		1
-26	S1412-15	..CIRCUIT BREAKER - (V88308) (15 AMP)		3
-27	S1412-35	..CIRCUIT BREAKER - (V88308) (35 AMP)		1
	41A-42220-2	..BUSBAR		9
	41A-42220-8	..BUSBAR		1
	41A-42220-6	..BUSBAR		1
	MS25226-4-2	..BUSBAR		4
	MS25226-4-3	..BUSBAR		2
	MS25226-4-4	..BUSBAR		3
-28	SS48152K2215	..BUTTON - (V09736)		5
	*	IAW C-12-114-000/CF-357, 360, 367, 426, 458CD-030, 031		
	**	IAW C-12-114-000/CF-469		
	***	IAW C-12-114-000/CF-514		

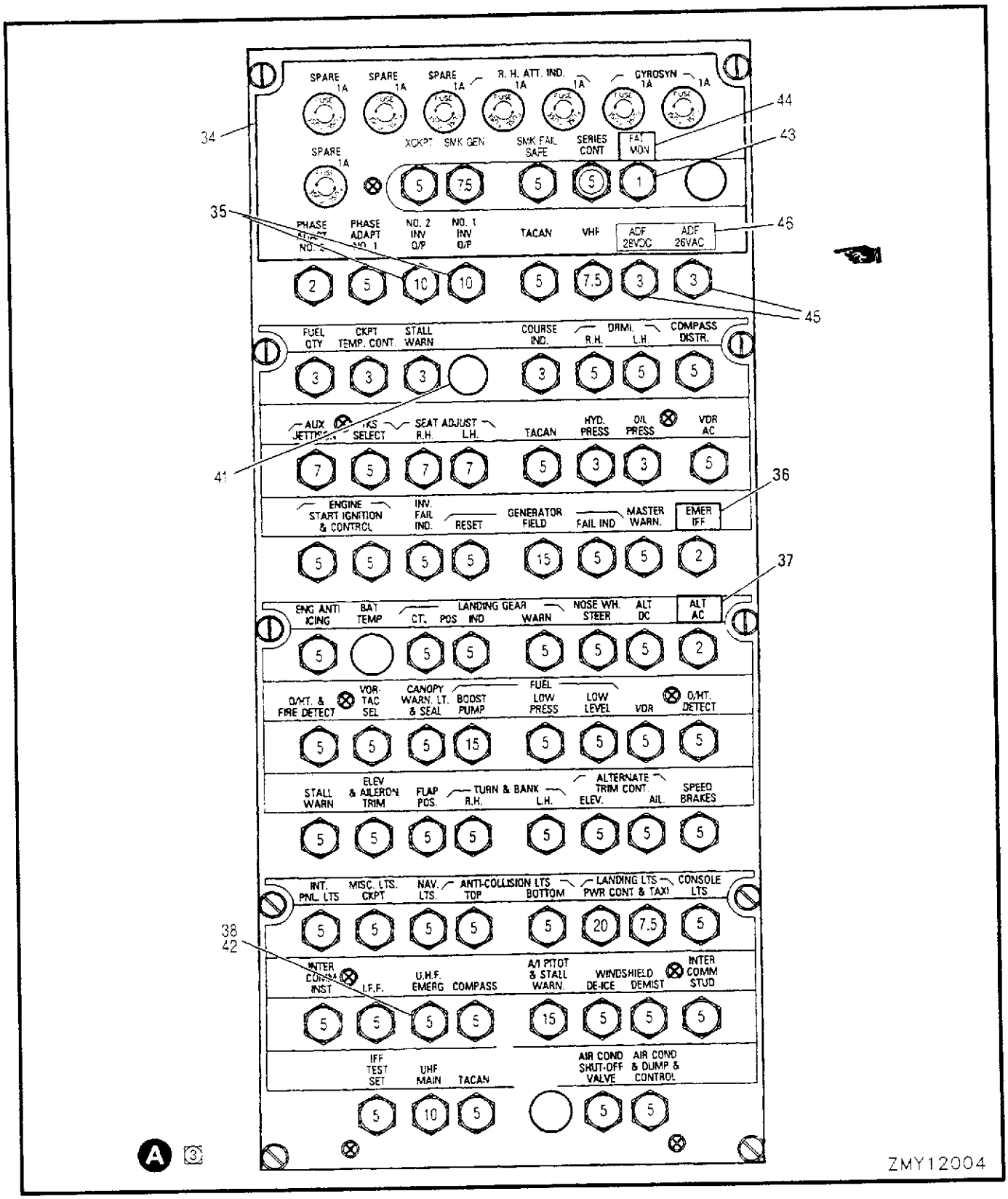

FIGURE 112 (SHEET 2) CENTRE CONSOLE CIRCUIT BREAKER PANEL

	FIGURE AND INDEX NUMBER	GROUP		ELECTRICAL EQUIPMENT	EFFEC-TIVITY	UNITS PER ASSY
		MAJOR ASSEMBLY		(SHEET 1 OF 2) CENTRE CONSOLE CIRCUIT BREAKER PANEL		
		PART NUMBER		1 2 3 4 5 6 7 NOMENCLATURE		
	112 -29	41A-50723-64		..PANEL ASSY - (V36452) (LIGHTING)		1
		CM8-627		...LAMP		6
	-30	41A-50723-60		..PANEL ASSY - (V36452) (LIGHTING)		1
		CM8-627		...LAMP		6
	-31	41A-50723-56		..PANEL ASSY - (V36452) (LIGHTING)		1
		CM8-627		...LAMP		6
	-32	41A-50723-32		..PANEL ASSY - (V36452) (LIGHTING)		1
		CM8-627		...LAMP		6
R	-33	MS35214-27		..SCREW		8
		S1426-6		..WASHER - (V88308)		8
		K41A-58044-2		DUAL STATIC INVERTER & UHF SYST INSTL (IAW C-12-114-000/CF-461)	A	NP
	-34	41A-50763		.PANEL - EDGE LIT	A	1
	-35	MS26574-10		.CIRCUIT BREAKER - (10 A MP) (CB1V & CB2V)	A	2
	-36	K41A-58043-6		.LABEL - (EMER IFF)	A	1
	-37	K41A-58043-4		.LABEL - (ALT AC)	C	1
	-38	MS26574-5		.CIRCUIT BREAKER - (5 AMP) (CB1RU)	C	1
R	-39			DELETED		
	-40	BAC20B43	**	PLUG - BLANKING		2
	-41	SS48152K2215		BUTTON - (IAW C-12-114-000/CF-487)	B	1
	-42	1500-059-3		CIRCUIT BREAKER - (3 AMP) (MJ9501) (IAW C-12-114-000/CF-521)		1
	-43	MS22073-1		CIRCUIT BREAKER - (IAW C-12-114-000/CF-469)		1
	-44	8525596		LABEL - (IAW C-12-114-000/CF-469)		1
R		NW4601109-1	*	CIRCUIT BREAKERS INSTL - ADF (SEE SECTION 13)		REF
R	-45	MS3320-3	*	.CIRCUIT BREAKERS - (3 AMPS) (CB501 & CB502)		2
R	-46	NW4601136-1	*	.LABEL		1

-OOO-

*	IAW C-12-114-000/CD-033
**	IAW C-12-114-000/CF-514 AND CF-515
A	FOR SNOWBIRD AIRCRAFT ONLY
B	FOR AIRCRAFT MODIFIED WITH INSTALLATION OF STATIC INVERTERS
C	FOR AIRCRAFT WITHOUT C-12-114-000/CF-507 EMBODIED

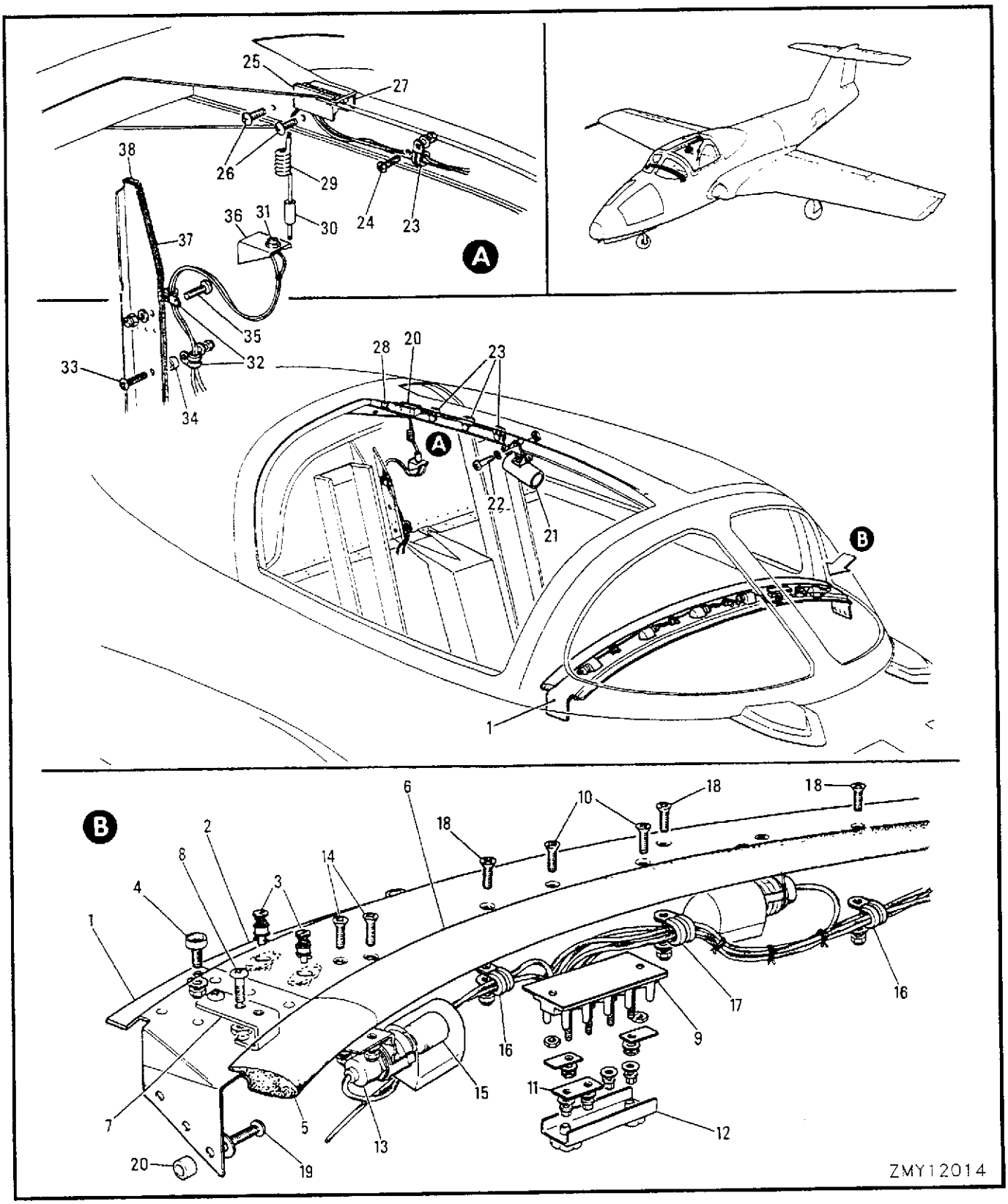

FIGURE 113 INSTRUMENT PANEL SHROUD LIGHTS

FIGURE AND INDEX NUMBER	GROUP	ELECTRICAL EQUIPMENT	EFFEC-TIVITY	UNITS PER ASSY
	MAJOR ASSEMBLY	INSTRUMENT PANEL SHROUD LIGHTS		
	PART NUMBER	1 2 3 4 5 6 7 NOMENCLATURE		
113 -	41A-52011-800 *	SHROUD & LIGHTING EQUIPMENT INSTL - INSTRUMENT PANEL (MODIFIED) (SEE FIG. 107)		NP
- 1	41A-52011-40	.CHANNEL - (INSTRUMENT SHROUD LH)		1
	41A-52011-41	.CHANNEL - (INSTRUMENT SHROUD RH)		1
	244-22	.RECEPTACLE - (V08179)		4
- 2	41A-52011-38	.CHANNEL - (INSTRUMENT SHROUD CENTRE)		1
	4002G	.GROMMET - (V08179)		4
	R4G	.SNAP RING - (V08179)		4
- 3	40S5-3	.STUD - (V08179)		4
- 4	MS27980-13C	.STUD		9
	AN960D8L	.WASHER		9
	MS21042L08	.NUT		9
- 5	41A-52011-44	.SPONGE - (SHROUD LH)		1
	41A-52011-45	.SPONGE - (SHROUD RH)		1
- 6	41A-52011-42	.SPONGE - (SHROUD CENTRE)		1
- 7	NO NUMBER	.BRACKET - SEAT SAFETY PIN STOWAGE (IAW C-12-114-000/CF-295)		2
- 8	MS27039-1-06	.SCREW		4
	52N1610-02	.NUT - (V72962)		4
- 9	MS27212-1-4	.TERMINAL BLOCK ASSY - (TB25)		1
	S1307H1-4	.STRIP - (V88308)		1
-10	MS24693-4	.SCREW		2
	MS21083N04	.NUT		2
	MS25227-1	.STRIP		2
-11	MS25226-2-2	.BUS - (ON POST 1-2)		1
	AN960-6	.WASHER		4
	MS21042L06	.NUT		4
-12	MS18029-1S4	.SHIELD		1
	41A-57145-800	.HARNESS ASSY - PILOTS INSTR PANEL SHROUD		1
-13	MS25027-2	..LIGHT ASSY		5
-14	MS24693-25	.SCREW		10
	AN960D8L	.WASHER		10
	MS21042L08	.NUT		10
-15	MS25069-1495	.LAMP		5
-16	MS21919WDG2	.CLAMP		4
-17	MS21919WDG3	.CLAMP		1
-18	MS24693-C26B	.SCREW		5
	AN960D8L	.WASHER		5
	MS21042L08	.NUT		5
-19	MS35207-264	.SCREW		10
	AN960D10	.WASHER		10
-20	NAS43DD3-8	.SPACER		6
	41A-42168	FLOODLIGHT INSTL - LET DOWN CHART (SEE FIG. 107)		NP
R -21	33645-1495	.FLOODLIGHT ASSY - (V72914) (AS PER 44-50758)		1
	MS25069-1495	.LAMP		1
	MS21919WDG2	.CLAMP - (IAW C-12-114-000/CF-338)		
-22	MS37039-1-10	.SCREW		2
	AN960-10L	.WASHER		2
	MS21042L3	.NUT		2
-23	MS21919WDG3	.CLAMP		3
-24	MS35206-244	.SCREW		3
	AN960D8L	.WASHER		3
	MS21042L08	.NUT		3
-25	MS27212-1-2	.TERMINAL BLOCK ASSY - (TB54)		1
	S1307H1-2A	.STRIP - (V88308)		1
-26	MS35206-217	.SCREW		2
	AN960D4L	.WASHER		2
	MS21042L04	.NUT		2
	MS25227-1	.STRIP		2
	AN960-6	.WASHER		2
	MS21042L06	.NUT		2
	*	IAW C-12-114-000/CF-295		

FIGURE AND INDEX NUMBER	GROUP	ELECTRICAL EQUIPMENT	EFFEC-TIVITY	UNITS PER ASSY
	MAJOR ASSEMBLY	INSTRUMENT PANEL SHROUD LIGHTS		
	PART NUMBER	1 2 3 4 5 6 7 NOMENCLATURE		
113 -27	MS18029-1S2	.SHIELD		1
-28	K41A-40533-26	.DECAL - (TB54)		1
	41A-57153	.HARNESS ASSY - LET DOWN CHART FLOODLIGHT		1
R -29	8001R	..COILED CORD - (K01)		1
-30	PJ055B	..PLUG - (V72653) (P11L)		1
	41A-57154	.HARNESS ASSY - LET DOWN CHART FLOODLIGHT		1
-31	JJ034	..RECEPTACLE - (V72653) (J7L)		1
-32	MS21919WDG3	.CLAMP		1
-33	MS35206-252	.SCREW		1
-34	NO NUMBER	.SPACER - (IAW C-12-114-000/CF-230)		1
-35	MS35206-243	.SCREW		1
	AN960D8L	.WASHER		2
	MS21042L08	.NUT		2
	41A-35037	BULKHEAD INSTL - REAR PRESSURE (SEE SECTION 3)		REF
-36	NO NUMBER	.BRACKET - (IAW C-12-114-000/CF-292)		1
	41A-35037-4	.WEB ASSY - REAR PRESSURE BULKHEAD UPPER (SEE SECTION 3)		REF
-37	41A-35037-220	..STRIP		1
-38	41A-35037-222	..STRIP		1

-OOO-

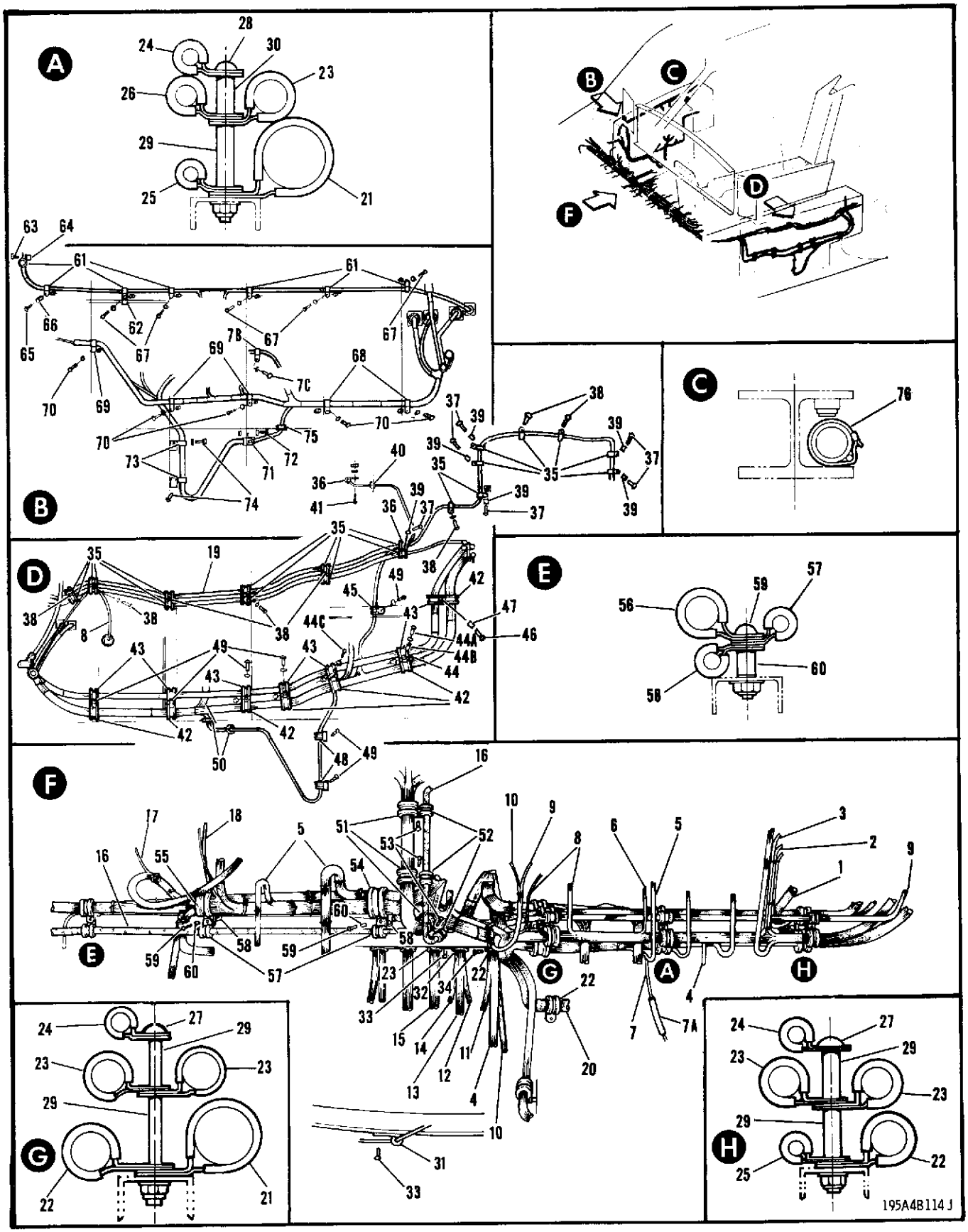

FIGURE 114 COCKPIT ELECTRICAL HARNESS

FIGURE AND INDEX NUMBER	GROUP		ELECTRICAL EQUIPMENT	EFFEC-TIVITY	UNITS PER ASSY
	MAJOR ASSEMBLY		COCKPIT ELECTRICAL HARNESS		
	PART NUMBER		1 2 3 4 5 6 7 NOMENCLATURE		
114 -	41A-43003		HARNESS INSTL - COCKPIT ELECTRICAL (SEE FIG. 115)		NP
- 1	41A-57112-804		.HARNESS ASSY - P14G		1
	PT06SE14-19S		..PLUG - (BAC) (LDG/GR CONTROL UNIT DISC AT P14G INSTRUMENT PANEL)		1
- 2	41A-57102-802		.HARNESS ASSY - P46 (MOD AS PER C-12-109-000/CF-033)		1
	PT06SE20-39S		..PLUG - (BAC) (COCKPIT RH DISCONNECT)		1
	MS3106R10SL3S		..PLUG - (LDG/GR POSITION IND DISC RH)		1
- 3	41A-57107-806		.HARNESS ASSY - P38		1
	PT06SE20-39S		..PLUG - (BAC) (AFT PRESSURE BULKHEAD DISCONNECT LH)		1
	MS3106R10SL3S		..PLUG - PILOTS INSTR & LH FACIA-PNL DISC)		2
- 4	41A-57114		.HARNESS ASSY - P17 (STA 149 BULKHEAD)		1
	PT06S22-21W		..PLUG - (BAC) (COCKPIT DISCONNECT)		1
	MS3106R20-27S		..PLUG - (CABIN TEMP CONTROL UNIT DISC)		1
	MS3106R10SL4S		..PLUG - (CABIN SAFETY VALVE DISC) (FOR SPARES ORDER CA3106R10SL4S)		1
	CA3106R10SL4S		..PLUG - (CED) (SPARE FOR MS3106R10SL4S)		
- 5	41A-57125-802		.HARNESS ASSY - ALTITUDE INDICATING SYS		1
	MS3106R24-28S		..PLUG - (VERTICAL GYRO DISCONNECT)		1
	MS3106R14-5S		..PLUG - (RATE GYRO DISCONNECT)		1
	PT06SE14-19S		..PLUG - (BAC) (ATTITUDE INDICATOR DISC LH)		1
- 6	41A-57124		.HARNESS ASSY - TURN & BANK INDICATOR (LH)		1
	MS3106R10SL3S		..PLUG - (INDICATOR DISCONNECT)		1
- 7	41A-57116-802	*	.HARNESS ASSY - P15G (MODIFIED)		1
	MS2106R16S1S		..PLUG - (AUDIBLE WARNING SIGNAL UNIT DISC)		
- 7A	S1244F16-9	*	..CONDUIT - (V88308)		1
- 7B	MS21919WDG3	*	.CLAMP		1
R - 7C	MS35206-245	*	.SCREW		1
	AN960D8L	*	.WASHER		1
	MS21042L08	*	.NUT		1
- 8	41A-57109-802		.HARNESS ASSY - P36		1
	PT06SE22-21S		..PLUG - (BAC) (COCKPIT DISCONNECT)		1
	MS3106R14S2S		..PLUG - (ENGINE OIL PRESS INDICATOR DISC)		
	MS3106R10SL3S		..PLUG - (TACHOMETER INDICATOR DISCONNECT)		
	10-74920-14		..CLAMP - (V06848)		1
	S1300-2		..ROD - (V88308)		3
	S1300-3		..ROD - (V88308)		1
- 9	41A-57130-802		.HARNESS ASSY - PIDC FUEL QUANTITY SYS		1
	165-61-1014		..CONNECTOR - (V02660) (FUEL QUANTITY) INDICATOR DISCONNECT)		1
	6841-1		..CONNECTOR - (V95712) (COCKPIT PRESSURE DISCONNECT LH)		1
	10-74912-3		..CLAMP - (V06848) (COCKPIT FEED THROUGH LH)		1
-10	41A-57101-802		.HARNESS ASSY - P19		1
	PT06SE22-21S		..PLUG - (BAC) (FUS STA 149 DISCONNECT)		1
	MS3106R14S2S		..PLUG - (HYD PRESSURE IN DICATOR DISC)		1
	MS3106R10SL3S		..PLUG - (NLG POSITION IN DICATOR DISC)		1
-11	41A-57128-800		.HARNESS ASSY - P13 TO CENTRE CONSOLE		1
	PT06SE20-16S		..PLUG - (BAC) (FWD PRESSURE DISCONNECT)		1
-12	41A-57129		.HARNESS ASSY - P15 TO CENTRE CONSOLE		1
	MS3106R20-18S		..PLUG - (FWD PRESSURE DISCONNECT		1
-13	41A-57001-800		.HARNESS ASSY - E3		1
	10-74920-14		..CLAMP - (V06848) (FUS STA 149 FEED THROUGH)		1
-14	41A-57100-800		.HARNESS ASSY - P11 TO CENTRE & RH CONSOLE		1
	PT06SE20-16PW		..PLUG - (BAC) (FUS STA 149 DISCONNECT)		1
-15	41A-57002-800		.HARNESS ASSY - E4		1
	10-74920-22		..CLAMP - (V06848) (FUS STA 149 FEED THROUGH)		1
	S1300-1		..ROD - (V88308)		1
		*	IAW CF-12-114-000/CF-139		

	FIGURE AND INDEX NUMBER	GROUP	ELECTRICAL EQUIPMENT	EFFEC-TIVITY	UNITS PER ASSY
		MAJOR ASSEMBLY	COCKPIT ELECTRICAL HARNESS		
		PART NUMBER	1 2 3 4 5 6 7 NOMENCLATURE		
	114 -16	41A-57103	.HARNESS ASSY - J34 TO EXHAUST TEMPERATURE INDICATOR & TRIMMER RESISTANCE		1
		SP00E12-83S(003)	..RECEPTACLE - (BAC) (J34) (COCKPIT PRESSURE DISCONNECT)		1
	-17	41A-57123	.HARNESS ASSY - TURN & BANK INDICATOR (RH)		1
		MS3106R10SL3S	..PLUG - (INDICATOR DISCONNECT)		1
	-18	41A-57126-800	.HARNESS ASSY - ATTITUDE INDICATING SYS (ATTITUDE INDICATOR RH)		1
		MS3106R10SL3S	..PLUG - (INDICATOR DISCONNECT)		1
	-19	41A-57131	.HARNESS ASSY - (J20 TO J40)		1
		SP00W10-6P(003)	..RECEPTACLE - (BAC) (J20 FUS STA 149 BHD & J40 COCKPIT PRESSURE DISCONNECT LH)		2
	-20	41A-57127	.HARNESS ASSY - ATTITUDE INDICATING SYS NO. 2 PHASE ADAPTER (P2AX)		1
		S1244B	.CONDUIT - (V88308) (DIA & LENGHT AS REQUIRED)		AR
	-21	MS21919WDG15	.CLAMP		2
	-22	MS21919WDG10	.CLAMP		4
	-23	MS21919WDG8	.CLAMP		6
	-24	MS21919WDG3	.CLAMP		3
	-25	MS21919WDG4	.CLAMP		2
	-26	MS21919WDG6	.CLAMP		1
R	-27	MS35207-273	.SCREW		2
R	-28	MS35207-272	.SCREW		1
	-29	NAS43DD3-48	.SPACER		5
	-30	NAS43DD3-32	.SPACER		1
	-31	MS21919WDG2	.CLAMP		1
	-32	MS21919WDG11	.CLAMP		1
R	-33	MS35206-245	.SCREW		2
R	-34	MS35206-251	.SCREW		1
		AN960D8L	.WASHER		3
		MS21042L08	.NUT		3
	-35	MS21919WDG4	.CLAMP		20
	-36	MS21919WDG2	.CLAMP		2
R	-37	MS35206-248	.SCREW		6
R	-38	MS35206-245	.SCREW		8
	-39	NAS43DD3-24	.SPACER		6
		AN960D8L	.WASHER		14
		MS21042L08	.NUT		14
	-40	MS35489-6	.GROMMET		1
	-41	MS24693-28	.SCREW		1
		AN960-6	.WASHER		1
		MS21042L06	.NUT		1
	-42	MS21919WDG11	.CLAMP		7
	-43	MS21919WDG8	.CLAMP		7
	-44	MS21919WDG4	.CLAMP		1
R	-44A	MS35206-249	.SCREW		1
	-44B	NAS43DD3-16	.SPACER		1
R	-44C	MS35206-246	.SCREW		1
	-45	MS21919WDG7	.CLAMP		1
R	-46	MS35206-333	.SCREW		1
	-47	NAS43DD3-40	.SPACER		1
	-48	MS21919WDG9	.CLAMP		2
R	-49	MS35206-245	.SCREW		7
		AN960D8L	.WASHER		7
		MS21042L08	.NUT		7
	-50	MS35489-18	.GROMMET		2
	-51	MS21919WDG11	.CLAMP		3
	-52	MS21919WDG3	.CLAMP		3
R	-53	MS35206-245	.SCREW		3
		AN960D8L	.WASHER		3
		MS21042L08	.NUT		3
	-54	MS21919WDG17	.CLAMP		1

	FIGURE AND INDEX NUMBER	GROUP		ELECTRICAL EQUIPMENT	EFFEC-TIVITY	UNITS PER ASSY
		MAJOR ASSEMBLY		COCKPIT ELECTRICAL HARNESS		
		PART NUMBER		1 2 3 4 5 6 7 NOMENCLATURE		
	114 -55	MS21919WDG16		.CLAMP		1
	-56	MS21919WDG8		.CLAMP		1
	-57	MS21919WDG3		.CLAMP		3
	-58	MS21919WDG4		.CLAMP		3
	-59	AN520-10R18		.SCREW		3
	-60	NAS43DD3-24		.SPACER		3
	-61	MS21919WDG4		.CLAMP		7
	-62	316-4-8		.CLIP - (V00502)		1
R	-63	MS35206-248		.SCREW		1
	-64	NAS43DD3-24		.SPACER		1
R	-65	MS35206-249		.SCREW		1
	-66	NAS43DD3-48		.SPACER		1
R	-67	MS35206-245		.SCREW		5
		AN960D8L		.WASHER		7
		MS21042L08		.NUT		6
	-68	MS21919WDG11		.CLAMP		2
	-69	MS21919WDG8		.CLAMP		3
R	-70	MS35206-249		.SCREW		5
		AN960D8L		.WASHER		5
		MS21042L08		.NUT		5
	-71	MS21919WDG6		.CLAMP		2
R	-72	MS35206-245		.SCREW		2
		AN960D8L		.WASHER		2
		MS21042L08		.NUT		2
	-73	MS21919WDG9		.CLAMP		2
R	-74	MS35206-251		.SCREW		2
		AN960D8L		.WASHER		2
		MS21042L08		.NUT		2
	-75	MS35489-18		.GROMMET		1
	-76	MS17821-1-8		.STRAP		3
		8525597-1	*	HARNESS ASSY - LOW CYCLE FATIGUE MONITOR		NP
		MS3476L14-12S	*	.CONNECTOR - (ENGINE LIFE MONITOR)		1
		MS3417-14N	*	.CLAMP		1
				(CONTINUED SEE FIG. 114A)		
			*	IAW C-12-114-000/CF-469		

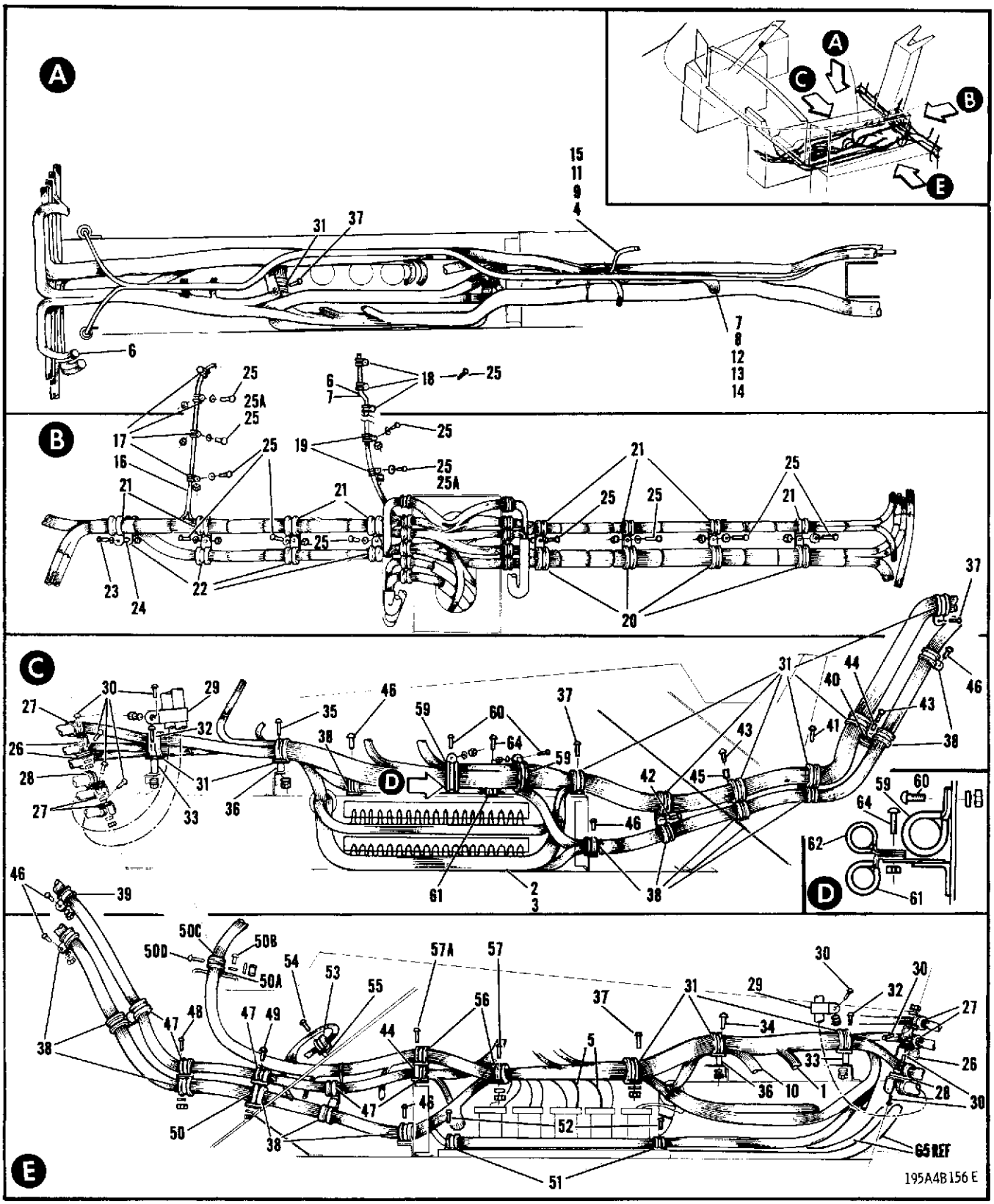

FIGURE 114A COCKPIT ELECTRICAL HARNESS

FIGURE AND INDEX NUMBER	GROUP	ELECTRICAL EQUIPMENT	EFFEC-TIVITY	UNITS PER ASSY
	MAJOR ASSEMBLY	COCKPIT ELECTRICAL HARNESS		
	PART NUMBER	1 2 3 4 5 6 7 NOMENCLATURE		
114A -	41A-43003	HARNESS INSTL - COCKPIT ECTRICAL LE (SEE FIG. 114)		REF
- 1	41A-57104-808	.HARNESS ASSY - P42		1
	MS25036-2	..LUG		13
	MS25036-6	..LUG - (S5HA)		1
	MS25036-49	..LUG - (S5HA, S4C, CB1HA & CB1HB)		6
- 2	41A-57105	.HARNESS ASSY - JB		1
	PT00SE14-19S	..RECEPTACLE - (BAC)(RH CTL COLUMN DISCONN)		1
	MS25036-2	..LUG		9
	MS25036-49	..LUG		2
- 3	41A-57106	.HARNESS ASSY - J7		1
	PT00SE14-19S	..RECEPTACLE - (BAC)(LH CTL COLUMN DISCONN)		1
	MS25036-2	..LUG		9
	MS25036-49	..LUG		2
- 4	41A-57108	.HARNESS ASSY - P1J		1
	PT06SE-19S	..PLUG - (BAC) (LH THROTTLE DISCONNECT)		1
	MS25036-2	..LUG		9
- 5	41A-57110	.HARNESS ASSY - P1M		1
	PT06SE12-3S	..PLUG - (BAC) (CANOPY ACTUATOR)		1
	MS25036-8	..LUG		3
	41A-57111	.HARNESS ASSY - TB21	001-010	1
- 6	41A-57111-800	.HARNESS ASSY - TB21	011-	1
	MS25036-2	..LUG - (TB21 & S1M)	001-010	3
	MS25036-2	..LUG - (TB21)	011-	2
	MS25036-7	..LUG - (TB21, K2M, S1M & S2M)		6
	MS25036-49	..LUG - (CB2M)		1
- 7	41A-57113-804	.HARNESS ASSY - P1WA		1
	PT06SE18-32S	..PLUG - (BAC) (P1WA)		1
	PT06SE22-55S	..PLUG - (BAC) (P9)		1
	MS25036-2	..LUG		8
	MS25036-3	..LUG - (N25)		1
- 8	41A-57115	.HARNESS ASSY - P1L		1
	AN3116-2	..CONNECTOR - (STANDBY COMPASS DISCONNECT)		1
	MS25036-2	..LUG		1
	MS25036-3	..LUG		1
- 9	41A-57117-800	.HARNESS ASSY - LH CONSOLE TO CTR CONSOLE		1
	MS25036-2	..LUG		21
	MS25036-3	..LUG - (N53 & N87)		2
	MS25036-6	..LUG		2
	MS25036-7	..LUG		2
	MS25036-8	..LUG		2
	MS25036-48	..LUG		7
	MS25036-49	..LUG		5
-10	41A-57118-804	.HARNESS ASSY - RH CONSOLE TO CTR CONSOLE		1
	MS25036-2	..LUG		17
	MS25036-48	..LUG		5
	MS25036-49	..LUG		15
	MS25036-3	..LUG - (N5 & N6)		2
	PT06SE10-6S	..PLUG - (BAC) (P3P)		1
-11	41A-57119-802	.HARNESS ASSY - CENTRE CONSOLE		1
	MS25036-2	..LUG		15
	MS25036-3	..LUG		2
	MS25036-6	..LUG		3
	MS25036-8	..LUG		2
	MS25036-12	..LUG		2
	MS25036-48	..LUG		2
	MS25036-49	..LUG		20
	MS25036-53	..LUG		5
	MS25036-56	..LUG		2

FIGURE AND INDEX NUMBER	GROUP	ELECTRICAL EQUIPMENT	EFFEC-TIVITY	UNITS PER ASSY
	MAJOR ASSEMBLY	COCKPIT ELECTRICAL HARNESS		
	PART NUMBER	1 2 3 4 5 6 7 NOMENCLATURE		
114A -12	41A-57121-808	.HARNESS ASSY - CENTRE CONSOLE TO LH FACIA & INSTRUMENT PANEL		1
	MS25036-2	..LUG		8
	MS25036-2	..LUG		15
	MS25036-3	..LUG		4
	MS25036-6	..LUG		2
	MS25036-7	..LUG		2
	MS25036-8	..LUG		1
	MS25036-48	..LUG		2
	MS25036-49	..LUG		10
	MS25036-53	..LUG		1
	S1244B14-3	..CONDUIT		AR
-13	41A-57122-802	.HARNESS ASSY - CENTRE CONSOLE		1
	MS25036-2	..LUG		21
	MS25036-3	..LUG		4
	MS25036-48	..LUG		4
	MS25036-49	..LUG		2
-14	41A-57134-806	.HARNESS ASSY - P44		1
	PT06SE20-16S	..PLUG - (BAC) (P44)		1
	MS25036-2	..LUG - (S1HA & S6HA)		2
	MS25036-2	..LUG - (S1HA, S6HA & TB56)		5
	MS25036-49	..LUG - (CB1WC)		1
-15	41A-57133-802	.HARNESS ASSY - CENTRE CONSOLE REAR RELAY PANEL		1
	PT06SE18-32S	..PLUG - (BAC) (P4P)		1
	SO1009	..SOCKET - (V35344) (J7P)		1
	S0-1021-7127	..SOCKET - (V35344) (J1K & J8P)		2
	SO1000	..SOCKET - (V35344) (J2GA & J2K)		2
	MS25036-2	..LUG		46
	MS25036-3	..LUG		14
	MS25036-48	..LUG - (M1P)		1
	MS25036-49	..LUG - (CB3P & CB4P)		2
	41A-57120	.HARNESS ASSY - P30	001-010	1
-16	41A-57120-800	.HARNESS ASSY - P30	011-	1
	PT06SE16-8S	..PLUG - (BAC) (P30)		1
	MS25036-2	..LUG - (S1M)	001-010	1
	MS25036-6	..LUG - (S2L)		2
	MS25036-8	..LUG - (Z1P)		1
	S1244B18-59-1/2	..CONDUIT - (V88308)		1
	S1244E11-18	..CONDUIT - (V88308)		1
	S1244B	.CONDUIT - (V88308) (DIA & LENGTH AS REQUIRED)		AR
-17	MS21919WDG3	.CLAMP		5
-18	MS21919WDG5	.CLAMP		3
-19	MS21919WDG4	.CLAMP		2
-20	MS21919WDG14	.CLAMP		4
-21	MS21919WDG11	.CLAMP		8
-22	MS21919WDG13	.CLAMP		4
R -23	MS35206-251	.SCREW		1
-24	NAS43DD3-80	.SPACER		1
R -25	MS35206-245	.SCREW		21
-25A	AN515-8R9	.SCREW		2
	AN960D8L	.WASHER		23
	MS21042L08	.NUT		23
-26	MS21919WDG6	.CLAMP		3
-27	MS21919WDG8	.CLAMP		5
-28	MS21919WDG10	.CLAMP		3
-29	668-3-8FR	.STRAP - (V00502)		2
R -30	MS35206-245	.SCREW		13
	AN960D8L	.WASHER		13
	MS21042L08	.NUT		13

	FIGURE AND INDEX NUMBER	GROUP	ELECTRICAL EQUIPMENT	EFFEC-TIVITY	UNITS PER ASSY
		MAJOR ASSEMBLY	COCKPIT ELECTRICAL HARNESS		
		PART NUMBER	1 2 3 4 5 6 7 NOMENCLATURE		
	114A -31	MS21919WDG16	.CLAMP		12
R	-32	MS35206-250	.SCREW		2
	-33	NAS43DD3-48	.SPACER		2
R	-34	MS35206-247	.SCREW		1
R	-35	MS35206-248	.SCREW		1
	-36	NAS43DD3-24	.SPACER		2
R	-37	MS35206-245	.SCREW		4
		AN960D8L	.WASHER		3
		MS21042L08	.NUT		3
	-38	MS21919WDG12	.CLAMP		13
	-39	MS21919WDG13	.CLAMP		1
	-40	MS21919WDG8	.CLAMP		1
	-41	AN515-8R9	.SCREW		1
R	-42	MS35206-246	.SCREW		1
R	-43	MS35206-333	.SCREW		2
	-44	NAS43DD3-48	.SPACER		2
	-45	NAS43DD3-56	.SPACER		1
R	-46	MS35206-245	.SCREW		6
		AN960D8L	.WASHER		7
		MS21042L08	.NUT		7
	-47	MS21919WDG9	.CLAMP		5
	-48	AN515-8R9	.SCREW		1
R	-49	MS35206-333	.SCREW		1
	-50	NAS43DD3-72	.SPACER		1
		AN960D8L	.WASHER		2
		MS21042L08	.NUT		2
	-50A	AN743-12	.BRACKET		1
R	-50B	MS35206-242	.SCREW		1
		MS35333-38	.LOCK WASHER		1
	-50C	MS21919WDG10	.CLAMP		1
R	-50D	MS35206-245	.SCREW		1
		AN960D8L	.WASHER		1
		MS21042L08	.NUT		1
	-51	MS21919WDG6	.CLAMP		2
R	-52	MS35206-245	.SCREW		2
		SL88-832-38-09	.CLIPNUT - (V97393)		2
	-53	MS21919WDG8	.CLAMP		1
R	-54	MS35206-247	.SCREW		1
	-55	NAS43DD3-24	.SPACER		1
	-56	MS21919WDG10	.CLAMP		2
R	-57	MS35206-245	.SCREW		1
R	-57A	MS35206-250	.SCREW		1
		AN960D8L	.WASHER		2
		MS21042L08	.NUT		2
	-58		DELETED		
	-59	MS21919WDG13	.CLAMP		2
R	-60	MS35206-245	.SCREW		2
		AN960D8L	.WASHER		2
		MS21042L08	.NUT		2
	-61	MS21919WDG12	.CLAMP		1
	-62	MS21919WDG9	.CLAMP		1
	-63		DELETED		
R	-64	MS35206-247	.SCREW		1
		AN960D8L	.WASHER		1
	-65	41A-90785-4	HARNESS ASSY - POWER CTL (TB42 TO SWITCH) (SEE SECTION 7)		1
			-OOO-		

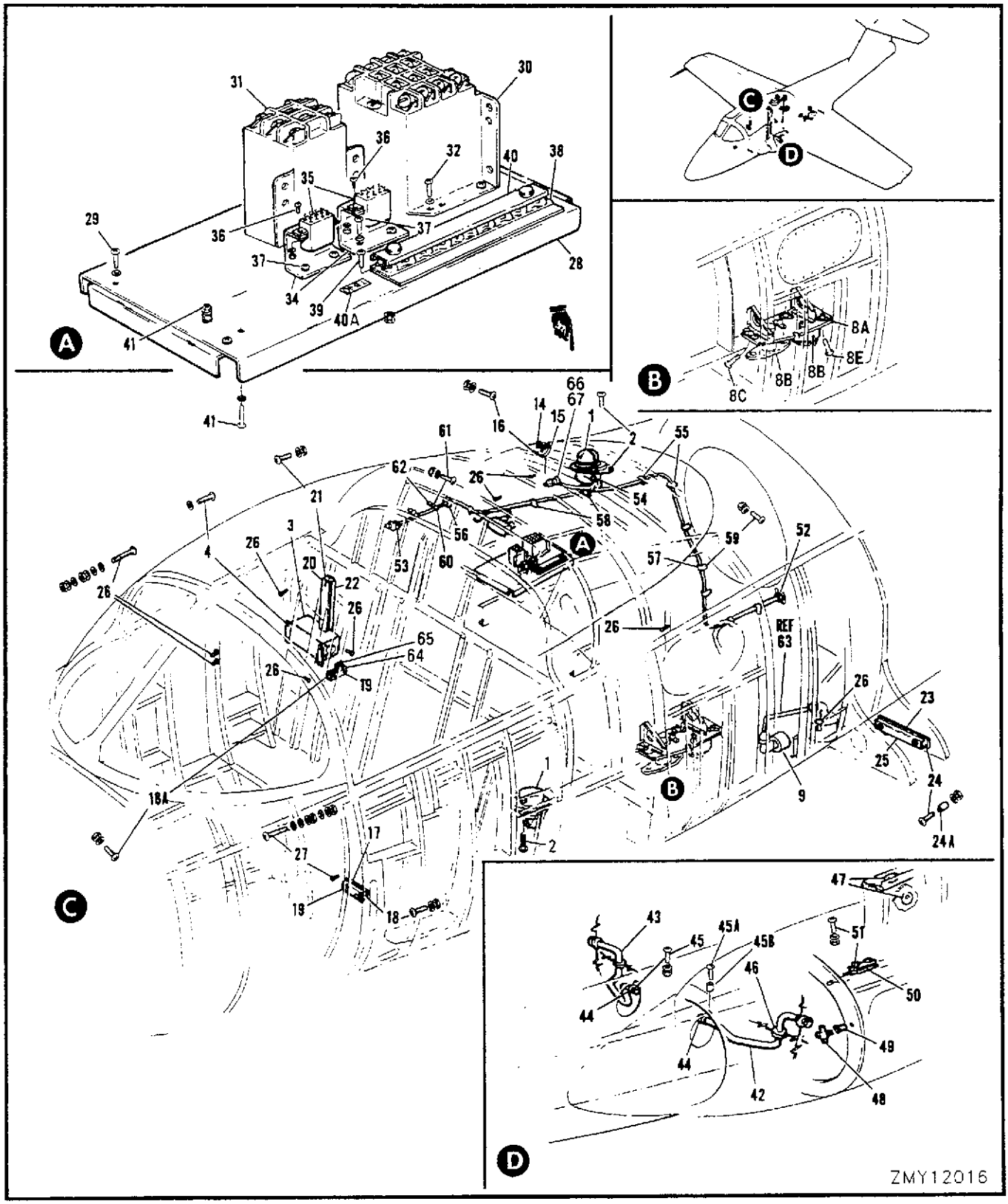

FIGURE 115 CENTRE FUSELAGE ELECTRICAL EQUIPMENT

FIGURE AND INDEX NUMBER	GROUP	ELECTRICAL EQUIPMENT	EFFEC-TIVITY	UNITS PER ASSY
	MAJOR ASSEMBLY	CENTRE FUSELAGE ELECTRICAL EQUIPMENT		
	PART NUMBER	1 2 3 4 5 6 7 NOMENCLATURE		
115 -	41A-42101	ELECTRICAL & ELEK EQUIP INSTL - CENTRE FUS (MOD BY C-12-114-000/CD-004) (SEE SECTION 3)		NP
	41A-43003	.HARNESS INSTL - COCKPIT ELECTRICAL (SEE FIG. 114)		REF
	41A-43012	.TROUGH INSTL - FUS HARNESS (SEE FIG. 106A)		REF
	41A-43014	.HARNESS INSTL - PORT WING FILLET (SEE FIG. 117)		REF
	41A-43015	.HARNESS INSTL - STBD WING FILLET (SEE FIG. 117)		REF
- 1	G8400A8-24	.LIGHT ASSY - (V72914) (ANTICOLLISION) FOR BRKDN SEE C-17-457-000/MS-000		2
	28-52944-2	.GASKET		2
R - 2	MS35206-230	.SCREW		10
- 3	C75506	.SIGNAL SUMMING UNIT - (V83326) (IAW 41A-50700-4) FOR BRKDN SEE C-17-962-003/MS-000		1
- 4	NAS1096-3-10	.SCREW		4
	AN960D10L	.WASHER		4
- 5		DELETED		
- 6		DELETED		
- 7		DELETED		
- 8		DELETED		
	41A-42166	.RELAY INSTL - GROUND POWER & GENERATOR REVERSING CURRENT		NP
- 8A	41A-42166-26	..BRACKET ASSY - (RELAY)		1
- 8B	MS24185D1	..RELAY - (K2P GROUND POWER)		1
- 8C	NAS623-4-3	..SCREW		2
	AN960-416L	..WASHER		2
- 8D	AN3025-600	..RELAY - (K1P GENERATOR REVERSING CURRENT)		1
- 8E	NAS623-3-4	..SCREW		4
	AN960-10L	..WASHER		4
- 9	21SN41-105 **	.SWITCH - (V02750) (FUEL LOW PRESSURE)		1
	AN960PD10L	.WASHER		2
	MS21042L3	.NUT		2
-10		DELETED		
-11		DELETED		
-12		DELETED		
-13		DELETED		
-14	AN3117-1	.RECEPTACLE - (FUEL NOZZLE GROUND)		1
-15	41A-42101-33	.JUMPER		1
R -16	MS35207-263	.SCREW		1
	AN960D8	.WASHER		1
	MS21042L3	.NUT		1
-17	MS27212-1-2 *	.TERMINAL BLOCK ASSY - (TB41)		1
	S1307H1-2	.STRIP - (V88308)		1
R -18	MS35206-215	.SCREW		2
	AN960D4L	.WASHER		2
	MS25227-1	.STRIP		2
	AN960-6	.WASHER		2
	MS21042L06	.NUT		2
-19	MS18029-1S2	.SHIELD		1
-20	MS27212-1-8	.TERMINAL BLOCK ASSY - (TB43)		1
	S1307V1-8	.STRIP - (V88308)		1
R -21	MS35206-217	.SCREW		2
	AN960-6	.WASHER		2
	MS21042L06	.NUT		2
	MS25227-1	.STRIP		2
	*	IAW C-12-114-000/CD-031		
	**	IAW C-12-114-OOO/CF-505		

	FIGURE AND INDEX NUMBER	GROUP	ELECTRICAL EQUIPMENT	EFFEC-TIVITY	UNITS PER ASSY
		MAJOR ASSEMBLY	CENTRE FUSELAGE ELECTRICAL EQUIPMENT		
		PART NUMBER	1 2 3 4 5 6 7 NOMENCLATURE		
	115 -22	MS18029-1S8	.SHIELD		1
	-23	MS27212-1-4	.TERMINAL BLOCK ASSY - (TB33)		1
		S1307H1-4A	.STRIP - (V88308)		1
R	-24	MS35206-221	.SCREW		2
	-24A	NAS43DD1-32	.SPACER		2
		AN960-6	.WASHER		2
		MS21042L06	.NUT		2
		MS25227-1	.STRIP		2
	-25	MS18029-1S4	.SHIELD		1
R	-26	MS35207-265	.SCREW - (GROUND STUD N15, N16, N18, N42, N48, N63, N69, N76 & N77)		9
R	-27	MS35207-264	.SCREW - (GROUND STUD N70)		1
		MS35335-32	.LOCK WASHER		10
		AN960-10L	.WASHER		20
		MS35338-43	.LOCK WASHER		20
		MS35650-302	.NUT		20
		41A-42152-804	.PANEL & RELAY INSTL - STBD WING FILLET		NP
	-28	41A-42152-32	..PANEL ASSY - RELAY		1
	-29	MS27039-1-06	..SCREW		4
		AN960-10L	..WASHER		4
	-30	MS24568D1	..RELAY - (K1GA GROUND SAFETY)		1
	-31	MS24149D1	..RELAY - (K3GA GROUND SAFETY)		1
R	-32	MS35206-246	..SCREW		8
		AN960D8L	..WASHER		8
	-33		DELETED		
		41A-57324-802	..HARNESS ASSY - WING FILLET		1
		41A-42219	...RELAY ASSY		2
	-34	41A-42219-2	....CHANNEL - RELAY MOUNTING (K4HA & K5HA)		1
	-35	RY4NA3B3L01	....RELAY -(K4HA & K5HA ZONE 2 COOLING IND)		1
R	-36	MS35206-203	....SCREW		2
		MS35333-35	....LOCK WASHER		2
		MS35649-222	....NUT		2
R	-37	MS35206-215	..SCREW		4
		AN960D4L	..WASHER		4
	-38	MS27212-1-9	..TERMINAL BLOCK ASSY - (TB40)		
		S1307H1-9A	..STRIP - (V88308)		1
R	-39	MS35206-215	..SCREW		2
		AN960D4L	..WASHER		2
		MS21042L04	..NUT		2
		MS25227-1	..STRIP		2
		AN960-6	..WASHER		9
		MS21042L06	..NUT		9
	-40	MS18029-1S9	..COVER ASSY		1
	-40A	K41A-59023-38	..DECAL - (TB40)		1
R	-41	MS35206-265	..SCREW - (GROUND STUD N68 & N78)		2
		MS35335-32	..LOCK WASHER		2
		AN960-10L	..WASHER		2
		MS35338-43	..LOCK WASHER		2
		MS35649-202	..NUT		2
		41A-42141	.FUEL QUANTITY SYS INSTL		NP
	-42	41A-42143	..CONDUIT - FUEL QUANTITY SYS (LH)		1
	-43	41A-42144	..CONDUIT - FUEL QUANTITY SYS (RH)		1
	-44	316-12-8	..CLIP - (V00502)		2
R	-45	MS35207-262	..SCREW		1
R	-45A	MS35207-268	..SCREW		1
	-45B	NAS43DD3-48	..SPACER		1
		AN960PD10L	..WASHER		2
		MS21042L3	..NUT		2
	-46	MS35489-20	..GROMMET		4
	-47	MS35489-6	..GROMMET		2

	FIGURE AND INDEX NUMBER	GROUP		ELECTRICAL EQUIPMENT	EFFEC-TIVITY	UNITS PER ASSY
		MAJOR ASSEMBLY		CENTRE FUSELAGE ELECTRICAL EQUIPMENT		
		PART NUMBER		1 2 3 4 5 6 7 NOMENCLATURE		
	115 -48	5335-1	**	..TEE CONNECTOR - (60674)		1
	-48A	MS35206-217	**	..SCREW		2
	-48B	MS15795-804	**	..WASHER		2
	-48C	MS21044N04	**	..NUT		2
	-49	2602-832		..RAWLPLUG - (V35993)		1
	-50	MS27212-1-2		..TERMINAL BLOCK ASSY - (TB37)		1
		S1307H1-2		..STRIP - (V88308) (IDENTIFICATION)		1
	-51	MS35206-215		..SCREW		2
		AN960PD4L		..WASHER		2
		MS21042L04		..NUT		2
		MS25227-1		..STRIP		1
		AN960-6		..WASHER		2
		MS21042L06		..NUT		2
		41A-43004		.HARNESS INSTL - CANOPY FAIRING		NP
		41A-57201-800		..HARNESS ASSY - P61 TO K2P & P31		1
	-52	MS3106R24-12S		...CONNECTOR - (P61)		1
		41A-57317		..HARNESS ASSY - REAR PRESSURE DISCONNECT P31 TO P9L & L1M		1
	-53	PT06SE16-8P		...PLUG - (BAC) (P31)		1
	-54	MS3106R10SL3S		...CONNECTOR - (P9L)		1
	-55	MS35489-7		..GROMMET		2
	-56	MS35489-12S		..GROMMET		1
	-57	MS21919WDG3		..CLAMP		3
	-58	MS21919WDG6		..CLAMP		2
	-59	MS35206-245		..SCREW		5
		AN960PD8L		..WASHER		5
		MS21042L08		..NUT		5
	-60	MS21919WDG8		..CLAMP		3
	-61	MS35206-249		..SCREW		3
	-62	NAS43HT3-32		..SPACER		2
		AN960PD8L		..WASHER		3
		MS21042L08		..NUT		2
R	-63	AE7010000E0120		HOSE ASSY - (FUEL STRAINER TO LOW PRESSURE SWITCH) (SEE SECTION 6)		REF
		K41A-58029	*	KIT - COCKPIT RECONFIGURATION AUX FUEL (SEE FIGURE 61D)		REF
	-64	MS27212-1-4		.TERMINAL BLOCK ASSY - (TB38)		1
		S1307H1-4		.STRIP - (V88308)		1
R		MS35206-217		.SCREW		2
		AN960D4		.WASHER		2
		MS25227-2A		.STRIP		2
	-65	CP10A1KB104K1		.CAPACITOR		1
		AN960D6L		.WASHER		4
		MS21042L06		.NUT		4
		MS18029-1S4		.SHIELD		1
R		NW4602003-1	***	JUMPER INSTL - BONDING (SEE SECTION 13)		REF
R	-66	M83413/8-2AB6	***	.JUMPER ASSY		1
R		M23053/5-104-4	***	.SLEEVING - INSULATION		1
R	-67	MS35207-262	***	.SCREW		1
R		AN960-10L	***	.WASHER		1
R		AN960JD10L	***	.WASHER		1
R		MS35338-43	***	.WASHER		1
R		MS21042-3	***	.NUT		1
R		AN960-6L	***	.WASHER		1
				-OOO-		
			*	IAW C-12-114-000/CD-031		
			**	IAW C-12-114-000/CF-471		
R			***	IAW C-12-114-000/CD-033		

FIGURE 116 DELETED

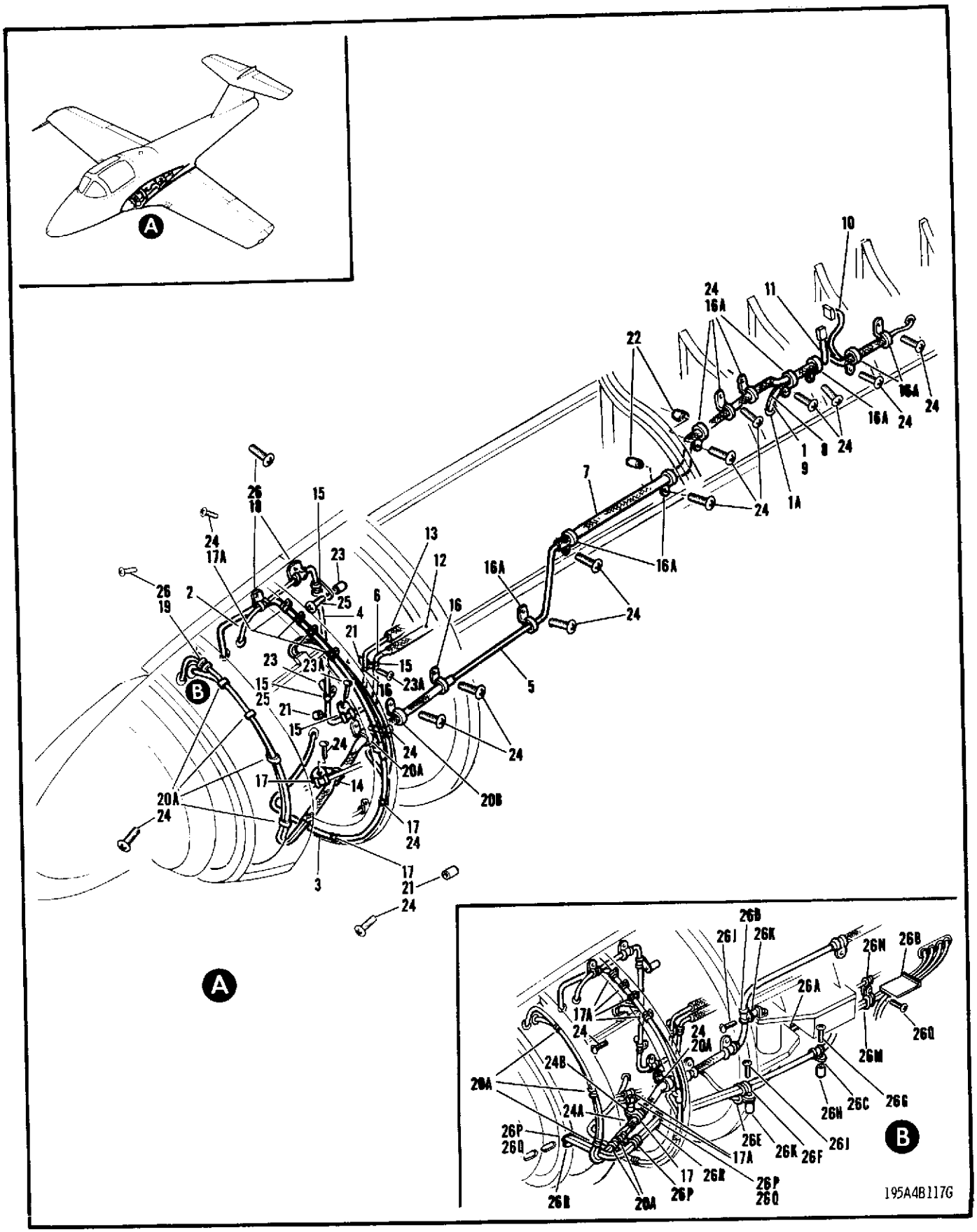

FIGURE 117 (SHEET 1) WING FILLET ELECTRICAL HARNESS

FIGURE AND INDEX NUMBER	GROUP	ELECTRICAL EQUIPMENT	EFFEC-TIVITY	UNITS PER ASSY
	MAJOR ASSEMBLY	WING FILLET ELECTRICAL HARNESS		
	PART NUMBER	1 2 3 4 5 6 7 NOMENCLATURE		
117 -	41A-43013	HARNESS INSTL - PORT WINGFILLET (SEE FIG. 115)		NP
- 1	41A-57312	.HARNESS ASSY - P13G-TB33& N63		1
	PT06SE10-6S	..PLUG - (V06848) (LDG/GR SELECTOR VALVE DISCONNECT P13G)		1
	MS25036-3	..LUG		1
	MS25036-2	..LUG		2
- 1A	MS35489-18	.GROMMET		1
- 2	41A-57313	.HARNESS ASSY - P33-P4DC		1
	6833-1	..PLUG - (V95712) (LH FUS DISCONNECT P33)		1
	6833-1	..PLUG - (V95712) (LH INTAKEFAIRING P4DC)		1
- 3	41A-57314	.HARNESS ASSY - FWD TANK PROBES P5DC & TB37		1
	6833-1	..PLUG - (V95712) (LH INTAKEFAIRING P5DC)		1
	6841-1	..PLUG - (V95712) (FWD TANK ACCESS DOOR P8DC)		1
	6810-1	..PLUG - (V95712) (FWD TANK ACCESS DOOR P10DC)		1
	MS25036-2	..LUG		1
- 4	S1244B12-16	.CONDUIT - (V88308)	001-050	1
- 5	S1244B7-20	.CONDUIT - (V88308)	001-050	1
- 6	S1244B7-24	.CONDUIT - (V88308)	001-050	1
- 7	S1244B8-48	.CONDUIT - (V88308)	001-050	1
- 8	S1244B12-55	.CONDUIT - (V88308)	001-050	1
- 9	S1244B16-38	.CONDUIT - (V88308)	001-050	1
-10	S1244B15-17	.CONDUIT - (V88308)	001-050	1
-11	S1244B16-7	.CONDUIT - (V88308)	001-050	1
	S1244B	.CONDUIT - (V88308) (DIA & LENGTH AS REQUIRED)	051-	AR
-12	S1244D12-3	.CONDUIT - (V88308)	001-050	1
-13	S1244D8-3	.CONDUIT - (V88308)	001-050	1
	S1244D	.CONDUIT - (V88308) (DIA & LENGTH AS REQUIRED)	051-	AR
	S1244E	.CONDUIT - (V88308) (DIA & LENGTH AS REQUIRED)		AR
	MS21919WDG13	.CLAMP	001-140	1
-14	MS21919WDG4	.CLAMP	141-	1
-15	MS21919WDG5	.CLAMP		4
-16	MS21919WDG8	.CLAMP		2
-16A	MS21919WDG12	.CLAMP		10
-17	MS21919WDG4	.CLAMP		4
-17A	MS21919WDG3	.CLAMP		5
-18	754WE7-2-8	.CLAMP - (V00502)		2
-19	754WE3-2-8	.CLAMP - (V00502)		1
-20		DELETED		
-20A	MS21919WDG16	.CLAMP		5
-20B	MS21919WDG12	.CLAMP		1
-21	NAS43DD3-64	.SPACER		3
-22	NAS43DD3-40	.SPACER		2
-23	NAS43DD3-88	.SPACER		2
R -23A	MS35206-251	.SCREW		2
R -24	MS35206-245	.SCREW		22
R -24A	MS35206-250	.SCREW		1
-24B	NAS43DD3-48	.SPACER		1
R -25	MS35206-334	.SCREW		2
R -26	MS35207-263	.SCREW		3
	AN960PD8L	.WASHER		31
	MS21042L08	.NUT		11
-26A	41A-57010-804	.HARNESS ASSY - MDP TO TROUGH		1
-26B	41A-43014-94	.PAD - (RUBBER)		1
-26C	MS21919WDG10	.CLAMP		1
-26D	MS21919WDG8	.CLAMP		1
-26E	MS21919WDG6	.CLAMP		1
-26F	443-8-2-8	.CLAMP - (V00502)		1
-26G	AN520-10R18	.SCREW		1
-26H	NAS43DD3-48	.SPACER		1
R -26J	MS35207-267	.SCREW		2

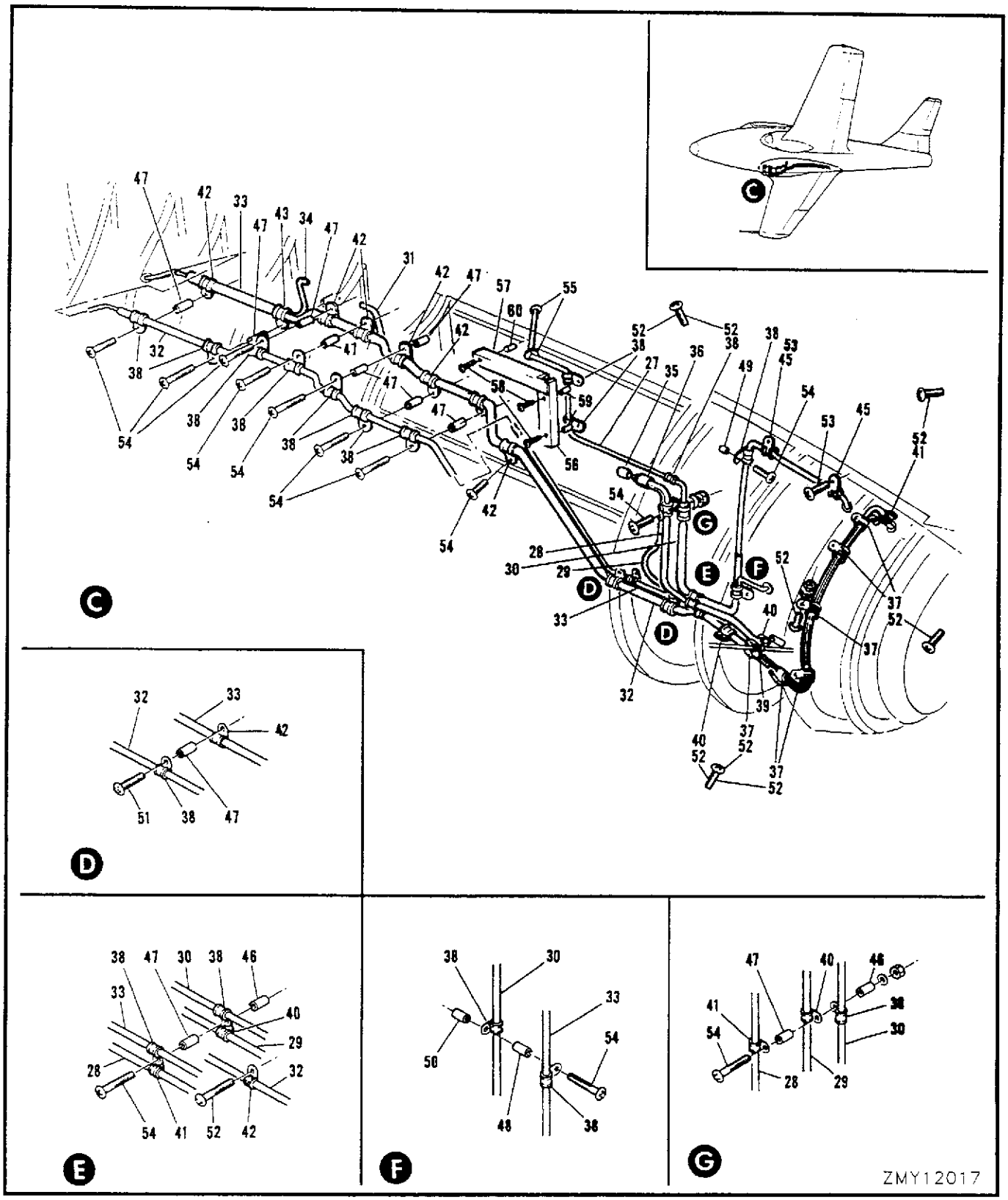

FIGURE 117 (SHEET 2) WING FILLET ELECTRICAL HARNESS

	FIGURE AND INDEX NUMBER	GROUP	ELECTRICAL EQUIPMENT	EFFEC-TIVITY	UNITS PER ASSY
		MAJOR ASSEMBLY	WING FILLET ELECTRICAL HARNESS		
		PART NUMBER	1 2 3 4 5 6 7 NOMENCLATURE		
	117 -26K	NAS43DD3-32	.SPACER		2
		AN960PD10L	.WASHER		3
		MS21042L3	.NUT		3
	-26M	MS21919WDG4	.CLAMP		1
	-26N	443-6-2-8	.CLAMP - (V00502)		1
	-26P	443-8-2-8	.CLAMP - (V00502)		3
R	-26Q	MS35206-245	.SCREW		3
		AN960PD8L	.WASHER		3
		MS21042L08	.NUT		3
	-26R	G51H-A	.GROMMET - (V03296)		2
		41A-43015	HARNESS INSTL - STBD WING FILLET (SEE FIG. 115)		NP
	-27	41A-57316	.HARNESS ASSY - P7DC & TB37 RH CENTRE TANK PROBE		1
		6833-1	..PLUG - (V95712) (LH INTAKE FAIRING P7DC)		1
		6841-1	..PLUG - (V95712) (RH CENTRE TANK ACCESS DOOR P18DC)		1
		6810-1	..PLUG - (V95712) (RH CENTRE TANK ACCESS DOOR P20DC)		1
		6811-1	..PLUG - (V95712) (RH CENTRE TANK ACCESS DOOR P16DC)		1
	-28	S1244B7-21	.CONDUIT - (V88308)	001-050	1
	-29	S1244B8-21	.CONDUIT - (V88308)	001-050	1
	-30	S1244B14-22	.CONDUIT - (V88308)	001-050	1
	-31	S1244B11-30	.CONDUIT - (V88308)	001-050	1
	-32	S1244B7-83	.CONDUIT - (V88308)	001-050	1
	-33	S1244B14-79	.CONDUIT - (V88308)	001-050	1
	-34	S1244B11-18	.CONDUIT - (V88308)	001-050	1
		S1244B	.CONDUIT - (V88308) (DIA & LENGTH AS REQUIRED)	051-	AR
	-35	S1244D9-3	.CONDUIT - (V88308)	001-050	1
	-36	S1244D8-3	.CONDUIT - (V88308)	001-050	1
		S1244D	.CONDUIT - (V88308) (DIA & LENGTH AS REQUIRED)	051-	AR
	-37	443-8-2-8	.CLAMP - (V00502)		6
	-38	MS21919WDG3	.CLAMP		19
	-39	MS21919WDG4	.CLAMP		1
	-40	MS21919WDG7	.CLAMP		4
	-41	MS21919WDG8	.CLAMP		3
	-42	MS21919WDG11	.CLAMP		10
	-43	MS21919WDG12	.CLAMP		1
	-44		DELETED		
	-45	754WE3-2-8	.CLAMP - (V00502)		2
	-46	NAS43DD3-48	.SPACER		2
	-47	NAS43DD3-40	.SPACER		16
	-48	NAS43DD3-66	.SPACER		1
	-49	NAS43DD3-88	.SPACER		1
	-50	NAS43DD3-32	.SPACER		1
R	-51	MS35206-232	.SCREW		2
R	-52	MS35206-245	.SCREW	001-050	12
R		MS35206-245	.SCREW	051-	10
R	-53	MS35207-263	.SCREW		2
R	-54	MS35206-253	.SCREW		11
		AN960PD8L	.WASHER		26
		MS21042L08	.NUT		9
	-55	MS35489-18	.GROMMET		2
	-56	41A-43024-2	.GUARD - STOWAGE COMPARTMENT ELEC HARNESS		1
	-57	41A-43024-4	.GUARD - STOWAGE COMPARTMENT ELEC HARNESS		1
R	-58	MS35206-250	.SCREW		3
	-59	NAS43DD3-32	.SPACER		2
	-60	NAS43DD3-40	.SPACER		1
		AN960PD8L	.WASHER		3

-OOO-

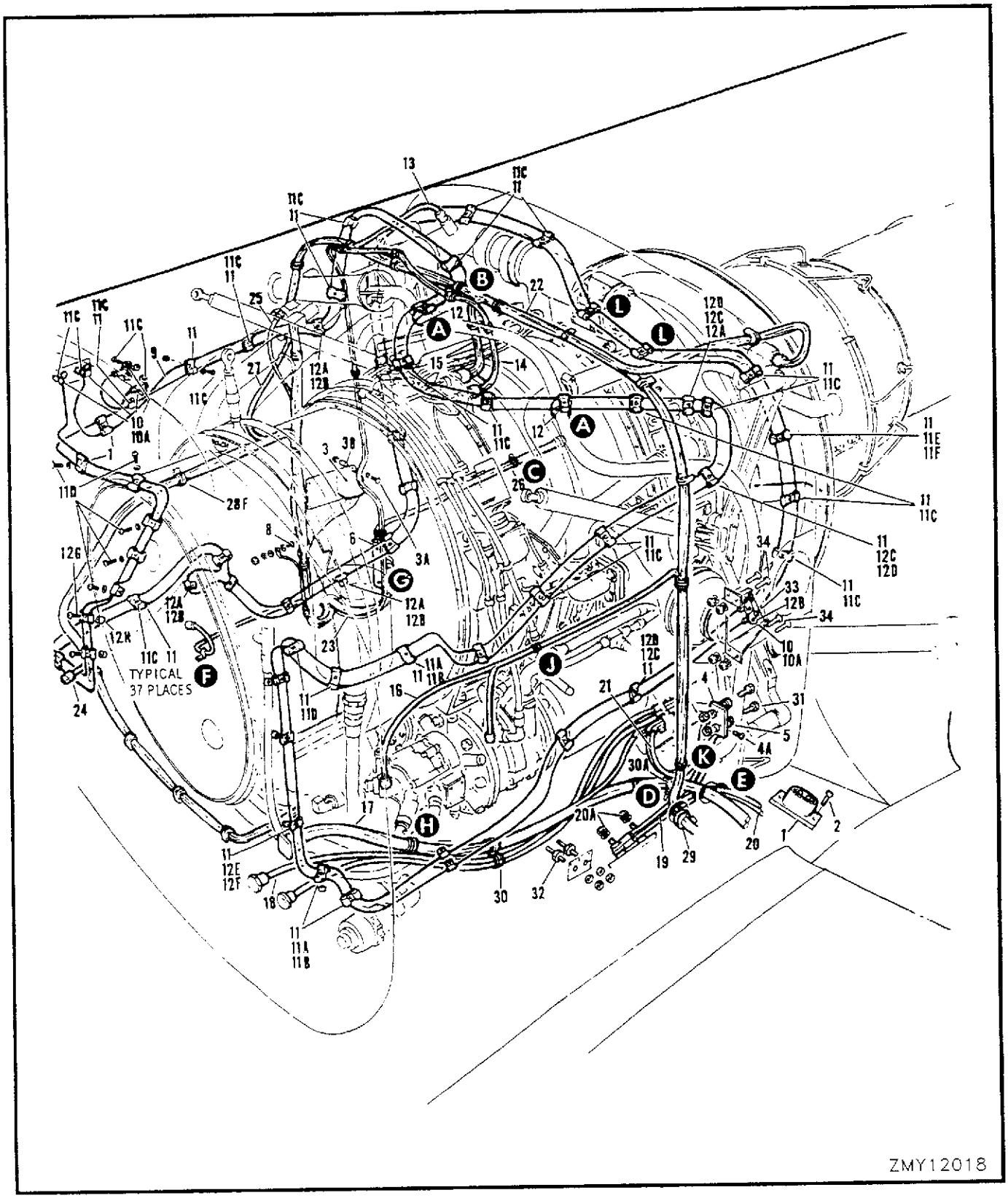

FIGURE 118 (SHEET 1) POWER PLANT ELECTRICAL EQUIPMENT

	FIGURE AND INDEX NUMBER	GROUP		ELECTRICAL EQUIPMENT	EFFEC-TIVITY	UNITS PER ASSY
		MAJOR ASSEMBLY		POWER PLANT ELECTRICAL EQUIPMENT		
		PART NUMBER		1 2 3 4 5 6 7 NOMENCLATURE		
	118 -	41A-42105		ELECTRICAL EQUIP. INSTL -POWER PLANT (IAW C-12-114-000/CD-004 & CD-019) (SEE SECTION 3)		NP
		41A-42156		.RECEPTACLE INSTL - GROUND POWER		NP
	- 1	AN2552-3A		..RECEPTACLE - (GROUND POWER)		1
	- 2	MS24693-274		..SCREW		2
		41A-42129		.RELAY INSTL - SYSTEM SHUT OFF & DEICE		NP
		41A-42129-2		..RELAY ASSY - SYSTEM SHUT OFF & DEICE (IAW C-12-114-000/CF-369)		1
	- 3	MS24149D1		...RELAY - (FUS STA 292-300 K3HA)		1
R	- 3A	MS35206-247		...SCREW		4
	- 3B	NAS43DD3-19		...SPACER		4
		AN960D8L		...WASHER		4
		MS21042L08		...NUT		4
	- 4	8300/300		.SHUNT - (V91812) (TYPE MSB30/1)		1
	- 4A	NAS623-3-6		.SCREW		2
		AN960D10		.WASHER		2
		MS21042L3		.NUT		2
	- 5	41A-42160		.BUS - AMMETER SHUNT		2
	- 6	MS27212-1-10		.TERMINAL BLOCK ASSY - (TB30)		1
		S1307V1-10		.STRIP - (V88308)		1
R		MS35206-219		.SCREW		2
		AN960D4L		.WASHER		2
		MS21042L04		.NUT		2
		MS25227-1		.STRIP		2
		AN960-6		.WASHER		10
		MS21042L06		.NUT		10
	- 7	MS18029-1S10		.SHIELD		1
R	- 8	MS35207-265		.SCREW - (GROUND STUD N10, N11, N12, N56 & N62 AT STA 292 & N39 & N79 AT STA 300)		7
		MS35335-32		.LOCK WASHER		7
		AN960-10L		.WASHER		14
		MS35338-43		.LOCK WASHER		14
		MS35650-302		.NUT		14
		41A-42117		.FIRE DETECTOR SYS INSTL - ZONE 1		NP
	- 9	244-18082		..CABLE ASSY - (V58880) (FIRE DETECTOR)		4
	-10	23693		..BRACKET - (V80099)		6
		22922		..NUT - (V80099)		4
	-10A	22922		..NUT - (V80099)		6
	-11	7C11-4		..CLAMP - (V08179)		99
R	-11A	MS35206-248		..SCREW		3
	-11B	NAS43DD3-24		..SPACER		4
R	-11C	MS35206-245		..SCREW		43
		AN960-8		..WASHER		46
		MS21042L08		..NUT		39
R	-11D	MS35207-263		..SCREW		11
		AN960-10		..WASHER		11
	-11E	NO NUMBER	*	..STOP - FIRE DETECTION CABLE PROTECTION		2
R	-11F	MS35206-248	*	..SCREW		2
R	-12	MS21919WH16		..CLAMP		2
		MS21042L3		..NUT		2
	-12A	7C11-4		..CLAMP - (V08179)		10
R	-12B	MS35206-245		..SCREW		4
R	-12C	MS35206-248		..SCREW		4
	-12D	NAS43DD3-24		..SPACER		3
		AN960-10		..WASHER		3
		AN960-8		..WASHER		3
R	-12E	MS35207-265		..SCREW		1
	-12F	NAS43DD3-16		..SPACER		1
R	-12G	MS35207-268		..SCREW		1
	-12H	NAS43DD3-48		..SPACER		1
			*	IAW C-12-114-000/CF-332		

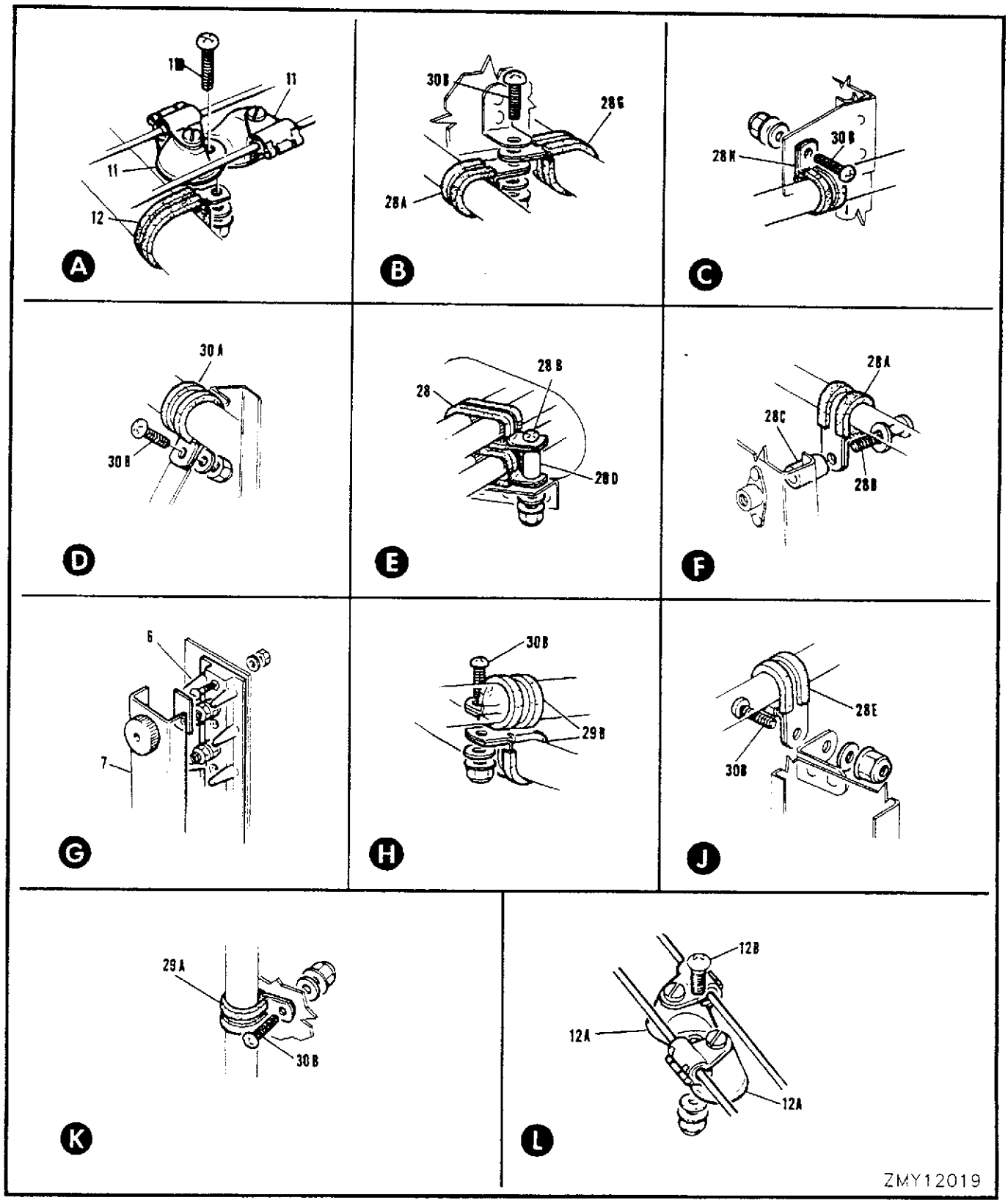

FIGURE 118 (SHEET 2) POWER PLANT ELECTRICAL EQUIPMENT

FIGURE AND INDEX NUMBER	GROUP	ELECTRICAL EQUIPMENT	EFFEC-TIVITY	UNITS PER ASSY
	MAJOR ASSEMBLY	POWER PLANT ELECTRICAL EQUIPMENT		
	PART NUMBER	1 2 3 4 5 6 7 NOMENCLATURE		
118 -	41A-43002	.HARNESS INSTL - ENGINE BAY ELECTRICAL		NP
-13	41A-57200-806	..HARNESS ASSY - P45 TO ENGINE BAY		1
	PT06SE20-16P	...PLUG - (BAC) (P45 COCKPIT DISCONN)		1
	AN3106R14S2SX	...CONNECTOR - (P1WC ICE DETECT DISCONN)		1
	AN3106R14S5S	...CONNECTOR - (P11HA ZONE 2 COOLING VALVE DISCONNECT)		1
	42232	...CONNECTOR - (V80099) (FIRE DETECTION WIRE DISCONNECT J1WB)		1
	MS25036-2	...LUG		17
	MS25036-2	...LUG		19
	MS25036-2	...LUG		22
	MS25036-3	...LUG		1
-14	41A-57301	..HARNESS ASSY - (P34 TO P2 DISCONNECT)		1
	PT06E12-83P	...PLUG - (BAC) (P34 & P2 RH FUSE & ENGINE DISCONNECT)		2
-15	41A-57300-800	..HARNESS ASSY - REAR PRESSURE DISCONN TO P1 ENGINE DISCONN		1
	PT06SE22-21P	...PLUG - (BAC) (LH FUSE DISCONN P37)		1
	PT06SE22-21S	...PLUG - (BAC) (ENGINE DISCONNECT P1)		1
	PT06SE10-6S	...PLUG - (BAC) (P3C SPEED BRAKE SELECTOR VALVE)		1
	MS25036-2	...LUG		1
	MS25036-3	...LUG		4
	MS25036-8	...LUG		1
	MS25036-49	...LUG		2
-16	41A-57303	..HARNESS ASSY - P12G TO TB33 & N62		1
	PT06SE10-6S	...PLUG - (BAC) (LDG/GR DOOR SEL VALVE DISCONNECT P12G)		1
	MS25036-2	...LUG		2
	MS25036-3	...LUG		1
-17	41A-57305	..HARNESS ASSY - FWD FIRE WALL DISCONN J61 TO GROUND POWER RECEPTACLE		1
	CA3100KE24-12P	...RECEPTACLE - (CED) (J61 DISCONNECT)		1
	MS3420-16	...BUSHING		1
	MS3057-16A	...ADAPTER		1
	MS25036-8	...LUG		1
	MS25036-12	...LUG		1
	MS25036-25	...LUG		2
-18	41A-57306-800	..HARNESS ASSY - REVERSE CURRENT RELAY TO STARTER GENERATOR		1
	9226-4	...FITTING - (CED)		1
R	MS35206-230	..SCREW		8
	AN960D6L	..WASHER		8
	MS21042L06	..NUT		8
-19	41A-57308	..HARNESS ASSY - SHUNT TO N37 & N38		1
	YBM2CL	...LUG - (V07693) (TERMINAL)		1
	MS25036-27	...LUG		3
-20	41A-57309	..HARNESS ASSY - GROUND POWER TO N37 & N38		1
	MS25036-25	...LUG		4
	AN960-616	..WASHER		2
-20A	MS21042L6	..NUT		2
-21	41A-57307	..HARNESS ASSY - STARTER GENERATOR TO SHUNT		1
	YBM2CL	...LUG - (V07693) (TERMINAL)		1
	MS25036-27	...LUG		3
-22	41A-57311	..HARNESS ASSY - FLAP POTENTIOMETER TO TB43		1
	PT06E8-3S	...PLUG - (BAC) (FLAP POTENTIOMETER DISCONNECT P3FD)		1
	MS25036-2	...LUG		3
	MS25036-3	...LUG		1
-23	41A-57302-806	..HARNESS ASSY - P43		1
	PT06SE22-21P	...PLUG - (BAC) (RH PRESSURE COCKPIT DISCONNECT P43)		1
	AN3106R18-1S	...CONNECTOR - (P4HB)		1
	AN3106R10SL3S	...CONNECTOR - (P2HB)		1

FIGURE AND INDEX NUMBER	GROUP	ELECTRICAL EQUIPMENT	EFFEC-TIVITY	UNITS PER ASSY
	MAJOR ASSEMBLY	POWER PLANT ELECTRICAL EQUIPMENT		
	PART NUMBER	1 2 3 4 5 6 7 NOMENCLATURE		
118 -	PT06SE14-5S	...PLUG - (BAC) (VALVE DISCONN P4HA)		1
	MS25042-10	...DUST CAP		1
	MS25042-18	...DUST CAP		1
	MS25036-2	...LUG		26
	MS25036-3	...LUG		4
	MS25036-7	...LUG		5
-24	41A-57304	..HARNESS ASSY - J60		1
	CA3100KE20-27P	...RECEPTACLE - (CED)(FIREWALL DISCONN J60)		1
	MS3057-12B	...ADAPTER - (FIREWALL DISCONN53T J608		1
	MS3420-12	...BUSHING - (FIREWALL DISCONNECT J60)		1
	MS25036-2	...LUG		1
-25	41A-57321	..HARNESS ASSY - K3HA TO P1HA		1
	PT06SE14-5S	...PLUG - (BAC) (SHUT OFF VALVE P1HA)		1
	MS25036-2	...LUG		3
	MS25036-3	...LUG		2
-26	41A-57310-800	..HARNESS ASSY - P70 TO TB 30 & P43		1
	CA3106KE20-27S	...PLUG - (CED) (REAR FUS DISCONNECT P70)		1
	MS3420-12	...BUSHING - (REAR FUS DISCONNECT P70)		2
	MS3057-12B	...ADAPTER - (REAR FUS DISCONNECT P70)		2
	MS25036-2	...LUG		10
	42233	...RECEPTACLE - (V80099) (J2WB & J6WB ENGINE BAY DISCONNECT)		2
	42232	...RECEPTACLE - (V80099) (J5WB ENGINE BAY DISCONNECT)		1
-27	41A-57323-800	..HARNESS ASSY - P1HB TO TB40		1
	PT06SE14-5S	...PLUG - (BAC) (RAIN REMOVAL & DEICE VALVE P1HB)		1
	MS25036-2	..LUG		2
	MS25036-3	..LUG		1
	S1244E8-12	..CONDUIT - (V88308)		1
	S1244E15-10	..CONDUIT - (V88308)		1
	S1244E15-17	..CONDUIT - (V88308)		1
	S1244E12-42	..CONDUIT - (V88308)		1
-28	443-6-2-8HT	..CLAMP - (V00502)		2
-28A	MS21919WH3	..CLAMP		19
R -28B	MS35206-250	..SCREW		3
-28C	NAS43DD3-46	..SPACER		2
-28D	NAS43DD3-48	..SPACER		1
	AN960PD8L	..WASHER		3
-28E	MS21919WH4	..CLAMP		5
-28F	MS21919WH5	..CLAMP		12
-28G	MS21919WH6	..CLAMP		4
-28H	MS21919WH7	..CLAMP		4
-29	MS21919WH8	..CLAMP		1
-29A	MS21912WH9	..CLAMP		6
-29B	MS21919WH11	..CLAMP		4
-30	MS21919WH12	..CLAMP		1
-30A	MS21919WH16	..CLAMP		1
R -30B	MS35206-245	..SCREW		37
	AN960PD8L	..WASHER		36
	MS21042L08	..NUT		38
-31	NAS1106-6	..BOLT		2
	AN960-616	..WASHER		2
	MS21042L6	..NUT		2
	41A-35004	FUSELAGE GENL ASSY - CENTRE (SEE SECTION 3)		REF
	41A-35102-2	.SUPPORT INSTL - ENGINE MAIN ACCESS DOOR LH		NP
-32	MS25080-5	..STUD - (N37 & N38 GROUND)		2
	AN960-616L	..WASHER		6
	MS21042L6	..NUT		2
	41A-42172	.PLATE INSTL - FIRE DETECTOR MTG (FUS STA 300-308)		NP
-33	41A-42172-2	..PLATE - FIRE DETECTOR MTG		1
R -34	MS35206-242	..SCREW		4
	AN960PD8L	..WASHER		4
	MS21042L08	..NUT		4

-OOO-

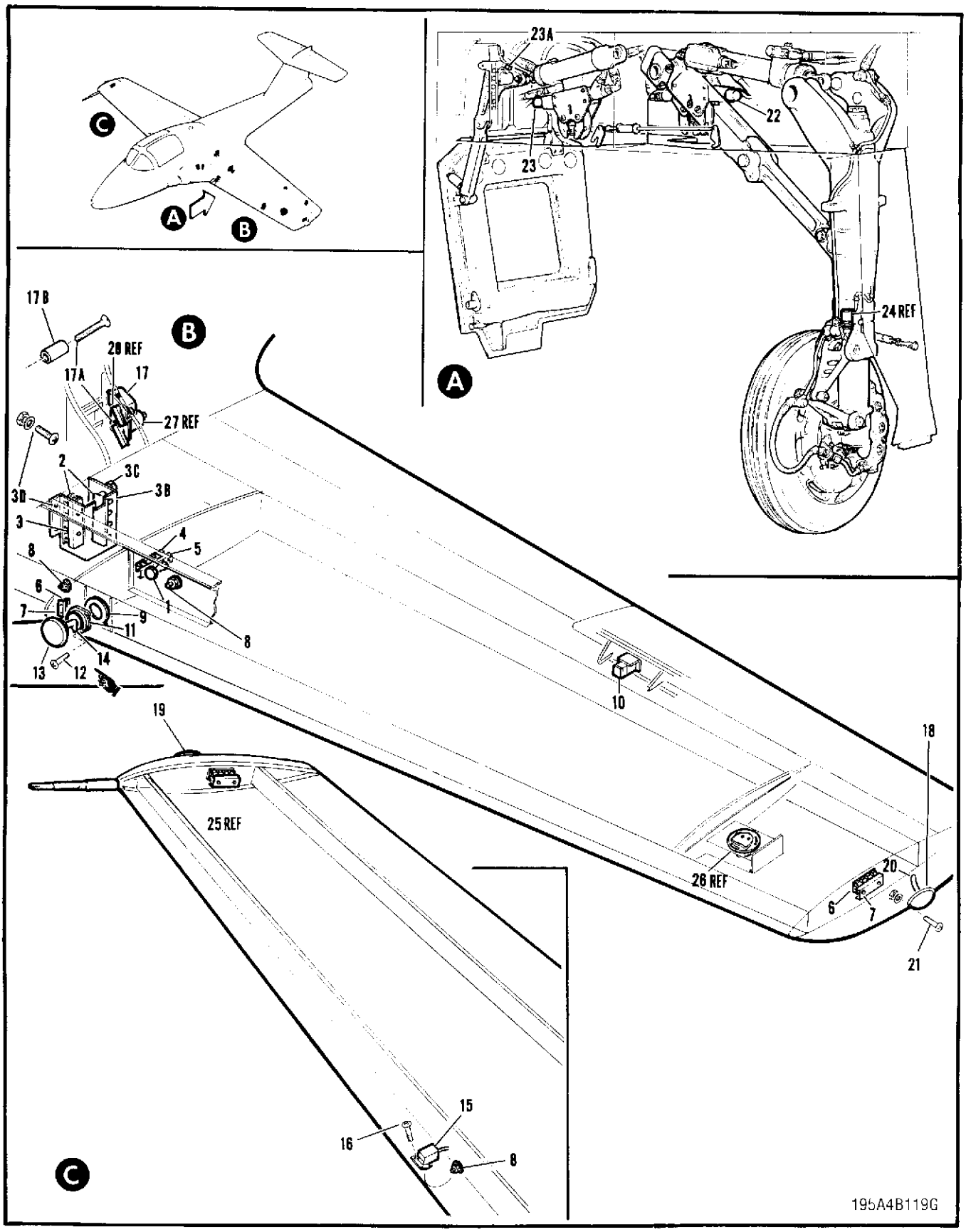

FIGURE 119 WING ELECTRICAL EQUIPMENT

	FIGURE AND INDEX NUMBER	GROUP: ELECTRICAL EQUIPMENT MAJOR ASSEMBLY: WING ELECTRICAL EQUIPMENT PART NUMBER	1 2 3 4 5 6 7 NOMENCLATURE	EFFEC-TIVITY	UNITS PER ASSY
	119 -	41A-42103-60	ELECTRICAL EQUIP. INSTL - WING PORT (SEE SECTION 1)		NP
		41A-42103-61	ELECTRICAL EQUIP. INSTL - WING STBD		NP
		41A-43000	.HARNESS INSTL - WING (SEE FIG. 120)		REF
	- 1	MS35059-23	.SWITCH - (LANDING GEAR DOOR PORT)		1
	- 2	MS27212-1-7	.TERMINAL BLOCK ASSY - (TB20 & TB51 PORT & TB28 & TB52 STBD)		2
		S1307V1-7	.STRIP - (V88308) (PORT)		2
		S1307V1-7B	.STRIP - (V88308) (STBD)		2
R		MS35206-217	.SCREW		4
		MS21042L04	.NUT		4
		MS25227-1	.STRIP		2
		AN960D6L	.WASHER		14
		MS21042L06	.NUT		14
	- 3	MS18029-1S7	.SHIELD		1
	- 3A	41A-42167	GUARD ASSY - WHEEL WELL TB PROTECTING PORT		1
		41A-42167-1	GUARD ASSY - WHEEL WELL TB PROTECTING STBD		1
	- 3B	41A-42167-2	..COVER - LH (TB IN WHEEL WELL)		1
		41A-42167-3	..COVER - RH (TB IN WHEEL WELL)		1
	- 3C	S1282A3	..NUT - (V88308)		2
		MS16624-1037	..RING		2
R	- 3D	MS35206-245	.SCREW		2
		AN960-8	.WASHER		2
		MS21042L08	.NUT		2
	- 4	MS27212-1-6	.TERMINAL BLOCK ASSY - (TB19 & TB27)		1
		S1307H1-6	.STRIP - (V88308)		1
R		MS35206-218	.SCREW		2
		NAS43DD1-8	.SPACER		2
		MS21042L4	.NUT		2
		MS25227-1	.STRIP		2
		AN960D6L	.WASHER		10
		MS21042L06	.NUT		10
	- 5	MS18029-1SG	.SHIELD		1
	- 6	MS27212-1-2	.TERMINAL BLOCK ASSY - (TB13 & TB36 PORT & TB12 STBD)		3
		S1307H1-2	.STRIP - (V88308)		3
R		MS35206-217	.SCREW		6
		MS25227-1	.STRIP		6
		AN960D6L	.WASHER		6
		MS21042L06	.NUT		6
	- 7	MS18029-1S2	.SHIELD		3
R	- 8	MS35207-265	.SCREW - (GROUND STUD)		3
		MS35335-32	.LOCK WASHER		3
		AN960-10L	.WASHER		6
		MS35338-43	.LOCK WASHER		6
		MS35650-302	.NUT		6
	- 9	G51H-C	.GROMMET - (V03296)		1
		41A-42103-54	ELECTRICAL EQUIP. INSTL - AILERON (PORT) (SEE SECTION 1)		NP
		41A-42113	.RELAY INSTL - AILERON TRIM TAB CONTROL		NP
	-10	MS24149D1	..RELAY - (AILERON TRIM TAB CONTROL)		1
R		MS35206-245	..SCREW		4
		AN960PD8L	..WASHER		4
		41A-42103-58	ELECTRICAL EQUIP. INSTL - WING LE PORT (SEE SECTION 1)		NP
		41A-42103-59	ELECTRICAL EQUIP. INSTL - WING LE STBD		NP
	-11	41A-42118	.HOLDER - LANDING LAMP (LE PORT)		1
		41A-42118-1	.HOLDER - LANDING LAMP (LE STBD)		1
	-12	MS35207-263	.SCREW - (IAW C-12-114-000/CF-473)		4
	-13	MS25241-4553	.LAMP - INCANDESCENT LANDING		1
	-14	MS25171-1S	.NIPPLE		2

FIGURE AND INDEX NUMBER	GROUP: ELECTRICAL EQUIPMENT MAJOR ASSEMBLY: WING ELECTRICAL EQUIPMENT PART NUMBER	1 2 3 4 5 6 7 NOMENCLATURE	EFFEC-TIVITY	UNITS PER ASSY
119 -15	C75507	.LIFT TRANSDUCER - (V83326) (STBD) (IAW 41A-50700-2) (FOR BRKDN SEE C-17-771-000/MN-000)		1
-16	MS24693-50	.SCREW - (STBD)		4
	41A-90851	FOLLOW UP SYS MECH INSTL - FLAP (SEE SECTION 7)		REF
-17	C75509	.TRANSMITTER - (V83326) (STALL WARNING POSN) (IAW 41A-50700-8)		1
	MS24693-50	.SCREW		3
-17A	MS24693-278	.SCREW - (STALL WARNING TRANSMITTER STOP)		1
	AN960PD10L	.WASHER		3
-17B	41A-90851-950	.SPACER - (TRANSMITTER STOP ECCENTRIC)		1
	MS21042L3	.NUT		2
	41A-11000	TIP GENL ASSY - WING (SEE SECTION 1)		REF
	41A-57402	.HARNESS ASSY - TB36 TO NAV LIGHT (PORT)		1
-18	AN3033-14	..LIGHT ASSY - (NAVIGATION) (PORT)		1
	MS24693-S30	...SCREW		1
	MS25309-7512	..LAMP		1
	AN3111-2	..RING		1
	41A-57502	.HARNESS ASSY - TB26 TO NAVIGATION LIGHT & PITOT HEATER (STBD WING)		1
-19	AN3033-15	..LIGHT ASSY - (NAVIGATION) (STBD) WING)		1
	MS24693-S30	...SCREW		1
	MS25309-7512	..LAMP		1
	AN3111-2	..RING		1
-20	S1244B16-8	.CONDUIT - (V88308) (PORT) WING)		1
	S1244B16-10	.CONDUIT - (V88308) (STBD) WING)		1
-21	MS24693-28	.SCREW		3
	AN960D6L	.WASHER		3
	MS21042L06	.NUT		3
	41A-87508-34	SWITCH ASSY - (MAIN GEAR UPLOCK PORT) (SEE SECTION 4)		1
	41A-87508-28	SWITCH ASSY - (MAIN GEAR UPLOCK STBD)		1
-22	21EN9-6	.SWITCH ASSY - (MSC)		1
	41A-87520-42	SWITCH ASSY - (MAIN GEAR DOORS UPLOCK) (SEE SECTION 4)		2
-23	21EN9-6	.SWITCH ASSY - (MSC)		1
-23A	41A-87508-28	SWITCH ASSY - UPLOCK (MAIN GEAR DOOR MECH) (SEE SECTION 4)		1
	21EN9-6	.SWITCH ASSY - (MSC)		1
-24	21EN9-6	SWITCH ASSY - (MLG SHOCK STRUT) (SEE SECTION 4)		REF
-25	MS27212-1-4	TERMINAL BLOCK ASSY - (TB26) (SEE SECTION 15)		REF
-26	664543	FLUX VALVE - TYPE C-2/C (SEE SECTION 14)		REF
R -27	MIL-T-5583A	TRANSMITTER - FOLLOW UP (SEE SECTION 14)		REF
-28	41A-90861	LEVER - FLAP POSITION TRANSMITTER (STALL WARNING) (SEE SECTION 7)		REF

-000-

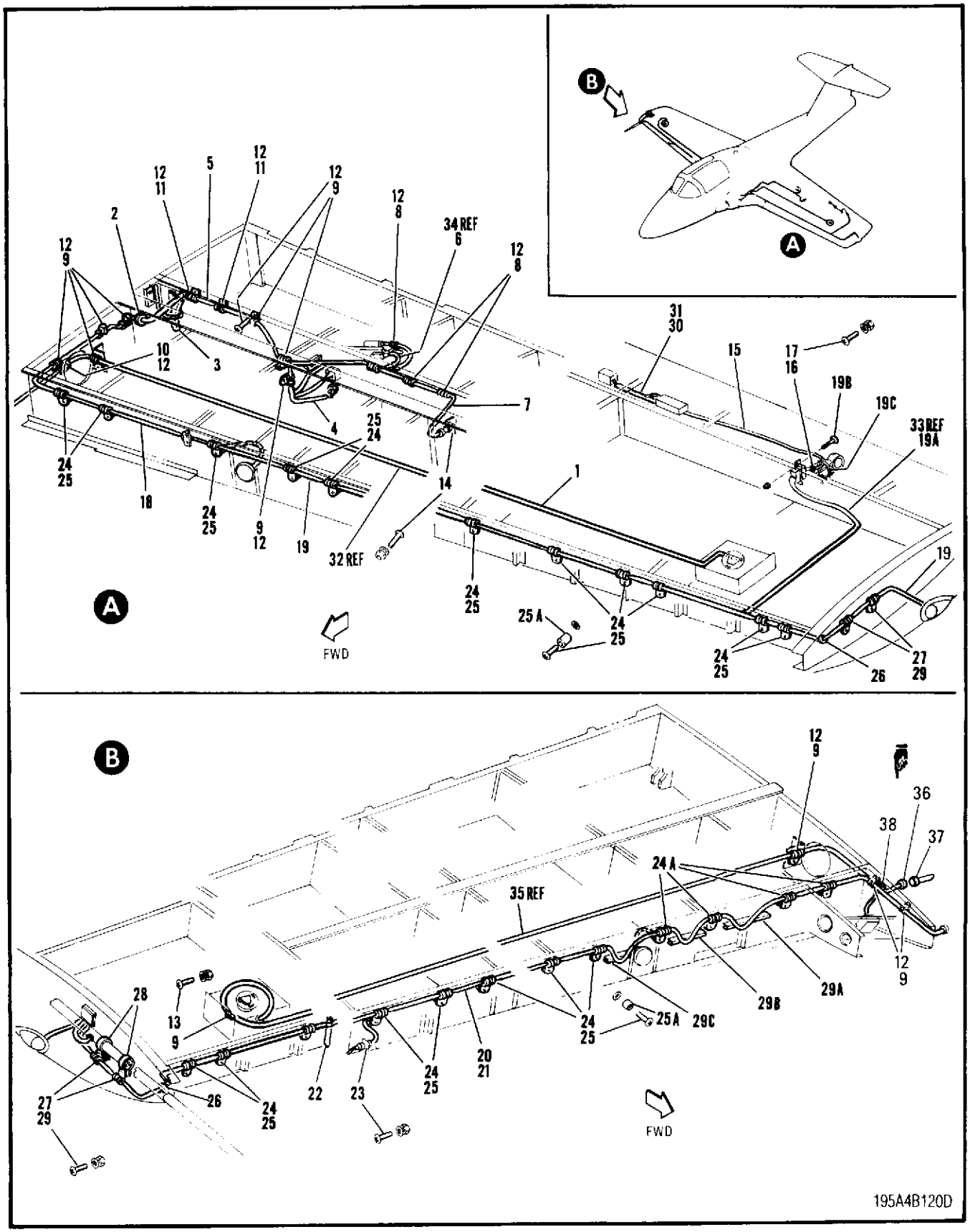

FIGURE 120 WING ELECTRICAL HARNESS

FIGURE AND INDEX NUMBER	GROUP: ELECTRICAL EQUIPMENT MAJOR ASSEMBLY: WING ELECTRICAL HARNESS PART NUMBER	1 2 3 4 5 6 7 NOMENCLATURE	EFFEC-TIVITY	UNITS PER ASSY
120 -	41A-43000	HARNESS INSTL - WING PORT (SEE FIG. 119)		NP
	41A-43000-1	HARNESS INSTL - WING STBD		NP
- 1	41A-57404	.HARNESS ASSY - P40 TO FLUX VALVE (PORT)		1
	PT06W10-6S	..PLUG - (BAC) (P40)		1
	GSB071	..FERRULE - (TBC) (INNER)		3
	GSC128	..FERRULE - (TBC) (OUTER)		3
- 2	MS35489-16	.GROMMET		1
- 3	S4905	.EXTRUSION - (V88308)		1
- 4	S1244B15-6	.CONDUIT - (V88308) (PORT)	001-025	1
- 5	S1244B10-44	.CONDUIT - (V88308) (PORT)	001-025	1
	S1244B11-34	.CONDUIT - (V88308) (STBD)	001-025	1
- 6	S1244B12-14	.CONDUIT - (V88308) (PORT)	001-025	1
	S1244B12-15	.CONDUIT - (V88308) (STBD)	001-025	1
- 7	S1244B16-24	.CONDUIT - (V88308) (PORT)	001-025	1
	S1244B16-13	.CONDUIT - (V88308) (STBD)	001-025	1
	S1244B	.CONDUIT - (V88308) (DIA & LENGTH AS REQUIRED)	026-	AR
- 8	MS21919WDG3	.CLAMP		3
- 9	MS21919WDG7	.CLAMP		12
-10	MS21919WDG8	.CLAMP		1
-11	MS21919WDG9	.CLAMP		2
R -12	MS35206-245	.SCREW		17
R -13	MS35206-245	.SCREW - (STBD WING STA 205)		1
	AN960PD8L	.WASHER		18
	MS21042L08	.NUT		18
R -14	MS35206-216	.SCREW - (WING STA 88)		1
	AN960PD4L	.WASHER		1
	MS21042L04	.NUT		1
-15	S1244E	.CONDUIT - (V88308) (PORT WING) (DIA & LENGTH AS REQUIRED)		AR
-16	MS21919WDG4	.CLAMP - (PORT WING STA 190)		1
R -17	MS35206-245	.SCREW - (PORT)		1
	AN960PD8L	.WASHER		1
	MS21042L08	.NUT		1
-18	41A-57401	.HARNESS ASSY - TB13 TO LANDING LIGHT(PORT)		1
	41A-57501	.HARNESS ASSY - TB12 TO LANDING LIGHT(STBD)		1
-19	41A-57400-802	.HARNESS ASSY - P39 TO PORT WING		1
	MS3106R14S2S	..CONNECTOR - (P2DA)		1
	PT06SE20-39P	..PLUG - (BAC) (PORT WING XMTR BREAK)		1
	PT06SE10-6S	..PLUG - (BAC) (P5G MAIN LANDING GEAR DOWN SWITCH)		1
	PT00SE12-10S	..RECEPTACLE - (BAC) (J4G MAIN LANDING GEAR WEIGHT SWITCH)		1
-19A	41A-57405	.HARNESS ASSY - J4C TO P39 & N75		1
	WP14SRA	..CONNECTOR - (ARB)(J4C AILERON DISCONNECT)		1
R -19B	MS35206-217	.SCREW		2
	AN960PD4L	.WASHER		2
-19C	MIL-T-43435TY1FINBSZ3	.TAPE - LACING & TYING		AR
-20	41A-57500	.HARNESS ASSY - P47 (STBD)		1
	PT00SE16-8S	..RECEPTACLE - (BAC) (J1FD LIFT TRANSDUCER DISC)		1

	FIGURE AND INDEX NUMBER	GROUP	ELECTRICAL EQUIPMENT	EFFEC-TIVITY	UNITS PER ASSY
		MAJOR ASSEMBLY	WING ELECTRICAL HARNESS		
		PART NUMBER	1 2 3 4 5 6 7 NOMENCLATURE		
	120 -	PT06SE20-39P	..PLUG - (BAC) (P47 TRANSPORT BREAK)		1
		PT06SE16-26S	..PLUG - (BAC) (P1FD LIFT COMPUTER DISC)		1
		PT06SE10-6S	..PLUG - (BAC)(P7G M/LDG/GR UP SWITCH)		1
		PT00SE12-10S	..RECEPTACLE - (BAC) (J6G MAIN LANDING GEAR WEIGHT SWITCH)		1
	-21	S1244B	.CONDUIT - (V88308) (DIA & LENGTH AS REQUIRED)		AR
	-22	S4905	.EXTRUSION - (V88308)		7
R	-23	MS35206-216	.SCREW - (STBD WING STA 143)		1
		AN960PD4L	.WASHER		1
		MS21042L04	.NUT		1
	-24	MS21919WDG4	.CLAMP - (19 ON PORT & 16ON STBD)		19
	-24A	MS21919WDG5	.CLAMP - (STBD WING STA 39, 55, 62 & 69)		4
R	-25	MS35206-249	.SCREW		19
	-25A	NAS43DD3-32	.SPACER		19
		AN960PD8L	.WASHER		19
	-26	MS35489-2	.GROMMET		1
	-27	MS21919WDG7	.CLAMP		2
	-28	MS21919WDG24	.CLAMP - (STBD WING STA 211)		2
R	-29	MS35206-245	.SCREW		2
		AN960PD8L	.WASHER		2
		MS21042L08	.NUT		2
	-29A	41A-43000-84	.EXTRUSION - (STBD)	026-	1
	-29B	41A-43000-85	.EXTRUSION - (STBD)	026-	1
	-29C	41A-43000-86	.EXTRUSION - (STBD)	063-	1
	-30	41A-57403	HARNESS ASSY - P4C TO AIL. TRIM TAB RELAY (PORT) (SEE SECTION 1)		1
		WP14PMA	.CONNECTOR - (ARB) (P4C AILERON DISCONNECT)		1
	-31	S1244E	CONDUIT - (V88308) (PORT) (SEE SECTION 1) (DIA & LENGTH AS REQUIRED)		AR
	-32	41A-42151-12	CONDUIT - (SEE SECTION 1)		REF
	-33	41A-42147	CONDUIT - (SEE SECTION 1)		REF
	-34	41A-87503-37	HARNESS ASSY - (SEE SECTION 4)		REF
	-35	41A-70380	LINE ASSY - IFF/SIF TRANSMISSION (SEE SECTION 13)		REF
	-36	UG1185U *	CONNECTOR - (V02660)		1
	-37	UG1186U *	CONNECTOR - (V02660)		1
R	-38	MS21919WG13 *	CLAMP		1
			-OOO-		
R		*	IAW C-12-114-000/CS-014		

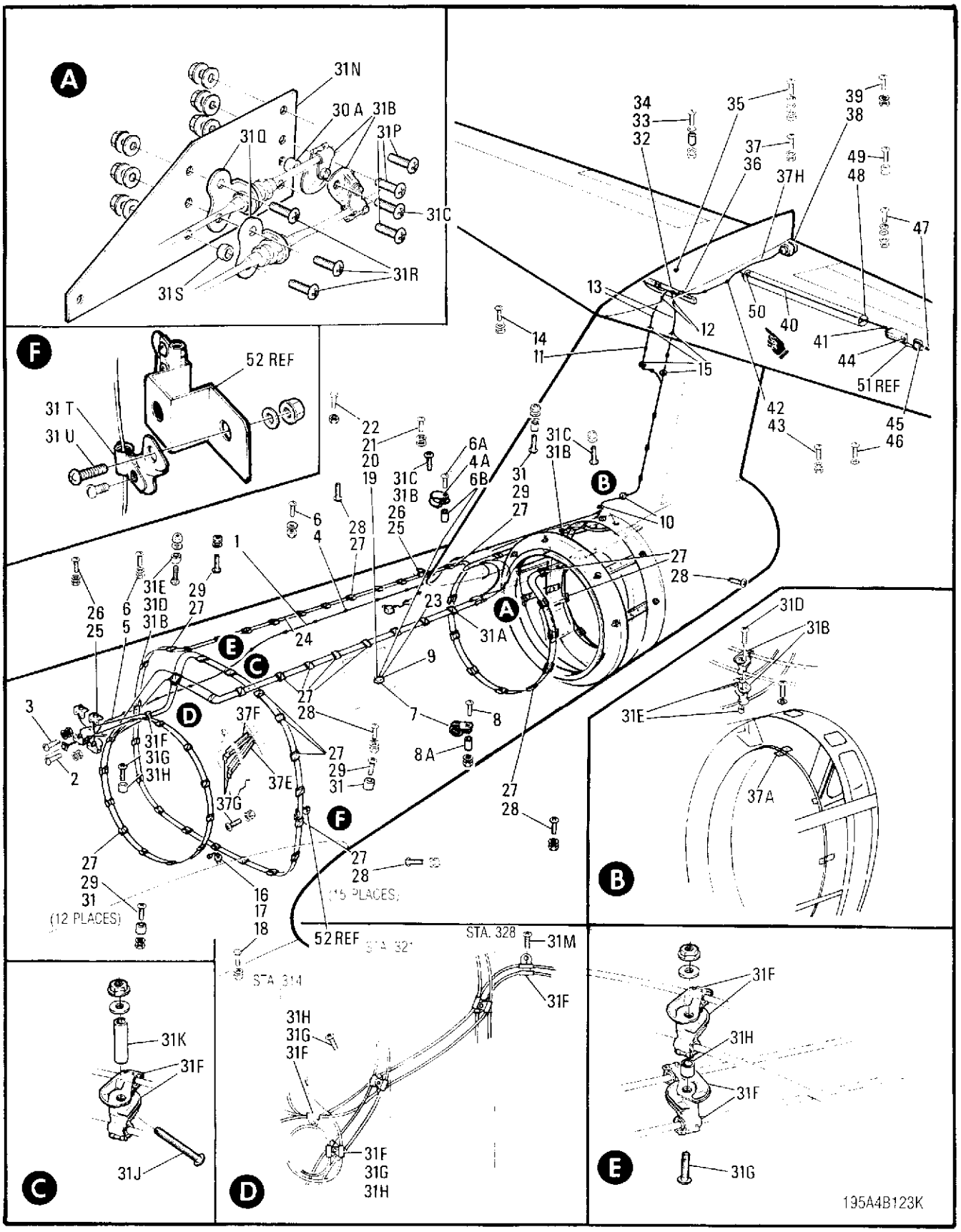

FIGURE 121 REAR FUSELAGE ELECTRICAL EQUIPMENT

FIGURE AND INDEX NUMBER	GROUP: ELECTRICAL EQUIPMENT MAJOR ASSEMBLY: REAR FUSELAGE ELECTRICAL EQUIPMENT PART NUMBER	1 2 3 4 5 6 7 NOMENCLATURE	EFFEC-TIVITY	UNITS PER ASSY
121 -	41A-42102	ELECTRICAL EQUIP. INSTL - REAR FUSELAGE (SEE SECTION 3)		NP
	41A-43001	.HARNESS INSTL - REAR FUSELAGE		NP
- 1	41A-57600-800	..HARNESS ASSY - J70		1
	CA3100KE20-27P	...RECEPTACLE - (CED)(TRANSPORT DISCONNECT)		1
	MS3420-12	...BUSHING		1
	MS3057-12B	...CLAMP		1
	42232	...CONNECTOR - (V80099) (J3WB & J7WB)		2
	42233	...CONNECTOR - (V80099) (J4WB & J8WB)		2
- 2	AN500A4-8	..SCREW		1
- 3	AN500-4-8	..SCREW		3
	AN960D4L	..WASHER		4
	MS21042L04	..NUT		4
	22922	..NUT - (V80099)		2
- 4	MS21919WCH5	..CLAMP		18
- 4A	MS21919WCH2	..CLAMP		1
- 5	MS21919WCH4	..CLAMP		3
- 6	MS35207-245	..SCREW		21
- 6A	AN520-8R18	..SCREW		1
- 6B	NAS43DD3-48	..SPACER		1
	AN960D8L	..WASHER		22
	MS21042L08	..NUT		22
- 7	MS21919WCH3	..CLAMP		1
- 8	AN520-8R18	..SCREW		1
- 8A	NAS43DD3-48	..SPACER		1
	AN960D8L	..WASHER		1
	MS21042L08	..NUT		1
- 9	MS35489-6	..GROMMET		1
-10	MS35489-14	..GROMMET		2
-11	MS21919WDG4	..CLAMP		6
-12	AN742D5	..CLAMP		2
-13	S1244B13-12	..CONDUIT - (V88308)		2
-14	MS35207-245	..SCREW		6
	AN960D8L	..WASHER		6
	MS21042L08	..NUT		6
-15	MS35489-6	..GROMMET		4
	41A-42135	.GROUND STUD INSTL - REAR FUSELAGE		NP
-16	9385	..GROUNDING DEVICE - (V03743)		1
-17	MS25083-4DE6	..JUMPER ASSY		1
R -18	NAS6204-3	..BOLT		1
	AN960D416	..WASHER		2
	MS21042L4	..NUT		1
-19	MS24456-1	.SWITCH ASSY		1
-20	C9614-1	.ACTUATOR ASSY - (STC)		1
-21	MS35206-219	.SCREW		2
	AN960-4	.WASHER		2
	MS21042L04	.NUT		2
-22	NAS428-3-5	.BOLT		1
	AN345-10	.NUT		1
-23	MS35207-265	.SCREW - (N55)		1
	MS35335-32	.LOCK WASHER		1
	AN960-10L	.WASHER		2
	MS35338-43	.LOCK WASHER		2
	MS35650-302	.NUT		2
	41A-42122	.FIRE DETECTOR SYSTEM INSTL - ZONE 2		NP
-24	244-21082	..CABLE ASSY - (V58880)		6
-25	23693	..BRACKET - (V80099)		6
	22922	..NUT - (V80099)		4
-26	MS35206-245	..SCREW		12
	AN960-10	..WASHER		12
	MS21042L08	..NUT		16
-27	7C11-4 *	..CLAMP - (V08179)		150
-28	MS35207-263	..SCREW		62
	*	IAW C-12-114-000/CD-019		

	FIGURE AND INDEX NUMBER	GROUP		ELECTRICAL EQUIPMENT	EFFEC-TIVITY	UNITS PER ASSY
		MAJOR ASSEMBLY		REAR FUSELAGE ELECTRICAL EQUIPMENT		
		PART NUMBER		1 2 3 4 5 6 7 NOMENCLATURE		
R	121 -29	MS35207-264	*	..SCREW		5
R	-30	MS35207-265		..SCREW		12
	-31	NAS43-3-16		..SPACER		20
		AN960-10		..WASHER		80
		MS21042L3		..NUT		80
	-31A	7C11-4		..CLAMP - (V08179)		1
	-31B	7C11-4	*	..CLAMP - (V08179)		13
R	-31C	MS35207-263	*	..SCREW		4
R	-31D	MS35207-264	*	..SCREW		2
	-31E	NAS43DD3-16	*	..SPACER		2
		AN960-10	*	..WASHER		6
		MS21042L3	*	..NUT		6
	-31F	7C11-4	*	..CLAMP - (V08179)		14
	-31G	MS35207-268	***	..SCREW		3
	-31H	NAS43DD3-26	***	..SPACER		3
R	-31J	MS35207-268	*	..SCREW		1
	-31K	NAS43DD3-48	*	..SPACER		1
R	-31M	MS35207-263	*	..SCREW		1
		AN960-10	*	..WASHER		5
		MS21042L3	*	..NUT		5
	-31N	41A-42122-30	*	..PLATE		1
R	-31P	MS35206-245	*	..SCREW		3
		AN960-10	*	..WASHER		3
		MS21042L3	*	..NUT		3
	-31Q	23693		..BRACKET - (V80099)		2
		22922		..NUT - (V80099)		2
R	-31R	MS35206-245	*	..SCREW		3
	-31S	NAS43DD3-4	*	..SPACER		1
		AN960-10	*	..WASHER		3
		MS21042L08	*	..NUT		3
	-31T	7C11-4	**	..CLAMP - (V08179)		2
	-31U	MS35207-263	**	..SCREW		2
		AN960-10	**	..WASHER		2
		MS21042L3	**	..NUT		2
		41A-42127		.TRANSPORT BREAK INSTL - HORIZONTAL STAB		NP
	-32	MS27212-1-8		..TERMINAL BLOCK ASSY - (TB18)		1
		S1307H1-8		..STRIP - (V88308)		1
		S1307H1-8		..STRIP - (V88308)		1
		MS25227-1		..STRIP		2
R	-33	MS35206-222		..SCREW		2
		NAS43DD1-40		..SPACER		2
		AN960D4		..WASHER		4
		MS21042L04		..NUT		2
		MS25227-1		..STRIP		2
		AN960D6		..WASHER		8
	-34	MS18029-1S8		..SHIELD		1
R	-35	MS35206-265		..SCREW - (N44)		1
		MS35335-32		..LOCK WASHER		1
		AN960-10L		..WASHER		2
		MS35338-43		..LOCK WASHER		2
		MS35650-302		..NUT		2
		41A-57801		..HARNESS ASSY - TB18 TO RESISTOR R1C TO GROUND STUD N44		1
	-36	RW22140		...RESISTOR - (V75042)		1
			*	IAW C-12-114-000/CD-019		
			**	IAW C-12-114-000/CF-353		
			***	IAW C-12-114-000/CF-423		

	FIGURE AND INDEX NUMBER	GROUP / MAJOR ASSEMBLY / PART NUMBER		ELECTRICAL EQUIPMENT / REAR FUSELAGE ELECTRICAL EQUIPMENT / 1 2 3 4 5 6 7 NOMENCLATURE	EFFEC-TIVITY	UNITS PER ASSY
R	121 -37	MS35206-247		..SCREW		2
		AN960PD8L		..WASHER		2
		MS21042L08		..NUT		2
		41A-36027		FRAME INSTL - REAR FUSELAGE FIN REAR SPAR (SEE SECTION 3)		NP
		41A-36027-2		.FRAME ASSY - REAR FUSELAGE FIN REAR SPAR		1
	-37A	NO NUMBER	**	..BRACKET - FIRE DETECTOR WIRE CLIP		AR
R	-37B	MS35207-263	**	..SCREW - (FUS STA 422)		AR
		AN960-10	**	..WASHER		AR
		MS21042L3	**	..NUT		AR
	-37C			DELETED		
	-37D			DELETED		
	-37D	41A-42173	*	BRACKET INSTL - FIRE DETECTOR WIRE CLIP (FUS STA 314-321) (SEE SECTION 3)		NP
	-37E	41A-42173-2		..BRACKET - FIRE DETECTOR CLIP		1
	-37F	41A-42173-4		..BRACKET - FIRE DETECTOR CLIP		1
R	-37G	MS35207-261	*	..SCREW		4
		AN960-10L	*	..WASHER		4
		MS21042L3	*	..NUT		4
		41A-42102-4		ELECTRICAL EQUIP. INSTL - EMPENNAGE (SEE SECTION 2)		NP
	-37H	41A-57B02		.HARNESS ASSY - TB18 TO TAIL LIGHT		1
	-38	MS25219-3		..LIGHT ASSY		1
		AN311I-2		..RING		1
R	-39	MS35206-228		.SCREW		2
		41A-42102-2		ELECTRICAL EQUIP. INSTL - ELEVATOR (SEE SECTION 2)		NP
	-40	41A-57B00		.HARNESS ASSY - TB18 TO ELEVATOR		1
	-41	MS25085-1		..SWITCH ASSY - (SEE SECTION 7, FIG. 78)		1
		S1244B18-4		..CONDUIT - (V88308)		1
		S1244B12-42		..CONDUIT - (V88308)		1
	-42	MS21919WDG6		.CLAMP		2
R	-43	MS35207-260		.SCREW		2
		AN960D10L		.WASHER		2
		MS21042L3		.NUT		1
	-44	MS17821-1-8		.STRAP		1
		41A-42115		.RELAY INSTL - ELEVATOR TAB		NP
	-45	MS24149D1		..RELAY - (ELEVATOR TAB)		1
R	-46	MS35206-245		..SCREW		4
		AN960PD8L		..WASHER		4
R	-47	MS35207-265		.SCREW - (N43)		1
		MS35335-32		.LOCK WASHER		1
		AN960-10L		.WASHER		2
		MS35338-43		.LOCK WASHER		2
		MS35650-302		.WASHER		2
	-48	MS21919WDG4		.CLAMP		1
	-49	MS24693-50		.SCREW		1
		AN960PD8L		.WASHER		1
		MS21042L08		.NUT		1
	-50	41A-42170		.STRIP - ELEVATOR HARNESS RUBBING		2
	-51	MS25083-2BD4		JUMPER ASSY - (SEE SECTION 2)		REF
	-52	NO NUMBER		BRACKET - OVERHEAT DETECTION WIRE STOF (IAW C-12-114-000/CF-353) (SEE SECTION 8)		REF
				-000-		
			*	IAW C-12-114-000/CD-019		
			**	IAW C-12-114-000/CF-344		

SECTION 13

ELECTRONIC EQUIPMENT

TABLE OF CONTENTS

FIGURE	TITLE	PAGE
122	UNDERWATER ACOUSTIC LOCATOR BEACON	13-02
123	NOSE COMPARTMENT ELECTRONICS & ANTENNAS	13-04
123A	NOSE COMPARTMENT ELECTRONICS & ANTENNAS (FOR AIRCRAFT WITH C-12-114-000/CF-459 OR CF-461, CF-462, CF-463 AND CF-464 EMBODIED)	13-04D
124	FUSELAGE STA 110 BULKHEAD ELECTRONIC	13-06
125 (1 OF 2)	NOSE COMPARTMENT ELECTRONIC HARNESSES	13-10
125 (2 OF 2)	NOSE COMPARTMENT ELECTRONIC HARNESSES	13-12
126	COCKPIT ELECTRONIC EQUIPMENT	13-16
127	FUSELAGE STA 149 BULKHEAD ELECTRONIC	13-20
128	COCKPIT ELECTRONIC HARNESSES	13-22
128A (1 OF 3)	DIRECTION FINDING SYSTEM DF-206A	13-26
128A (2 OF 3)	DIRECTION FINDING SYSTEM DF-206A	13-27
128A (3 OF 3)	DIRECTION FINDING SYSTEM DF-206A	13-28

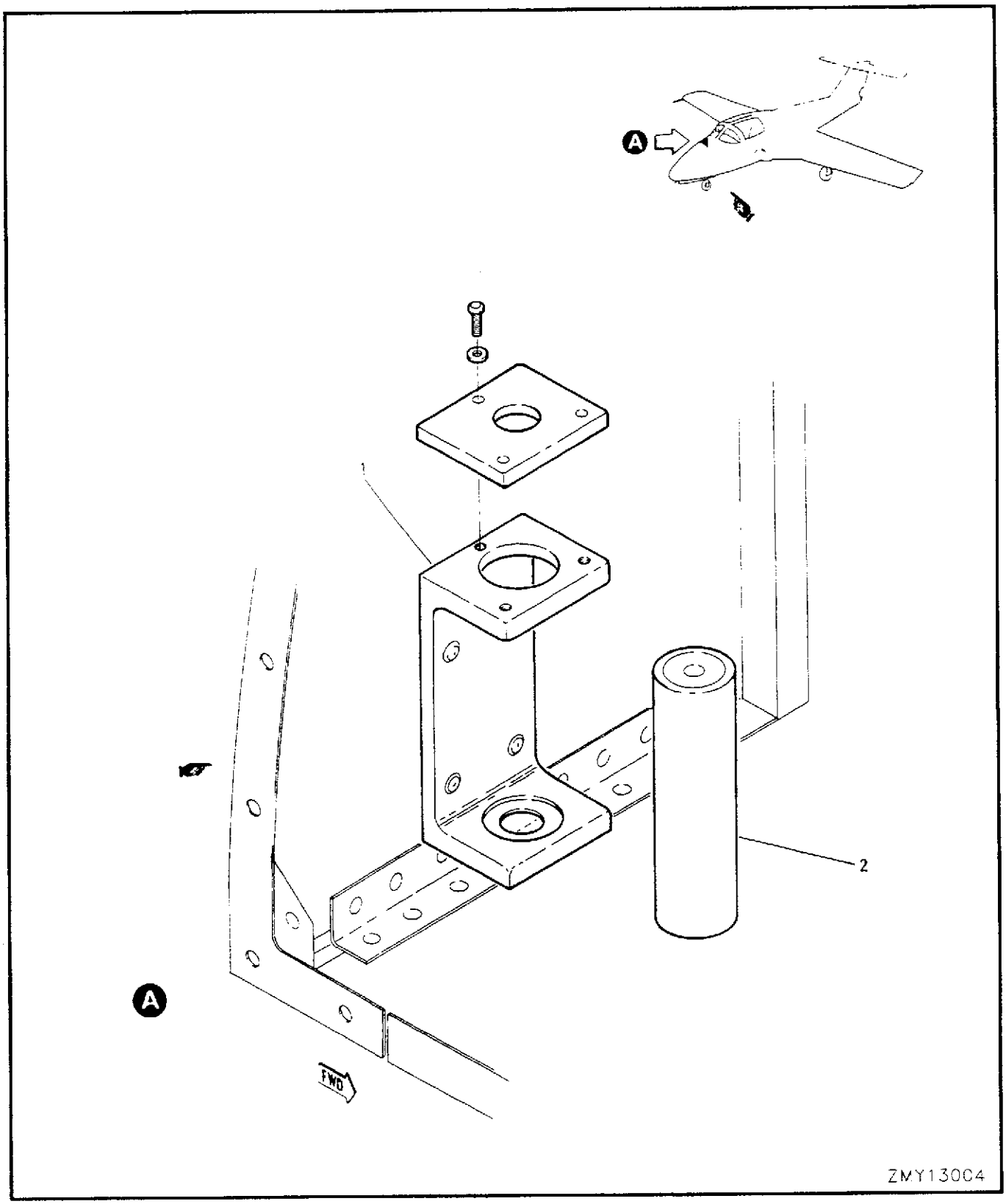

FIGURE 122 UNDERWATER ACOUSTIC LOCATOR BEACON

	FIGURE AND INDEX NUMBER	GROUP		ELECTRONIC EQUIPMENT	EFFEC-TIVITY	UNITS PER ASSY
		MAJOR ASSEMBLY		UNDERWATER ACOUSTIC LOCATOR BEACON		
		PART NUMBER		1 2 3 4 5 6 7 NOMENCLATURE		
	122 -	NO NUMBER		BEACON INSTL - UNDERWATER ACOUSTIC LOCATOR (IAW C-12-114-000/CF-416)		NP
R	- 1	N30A26	*	.MOUNTING KIT - (V94970)		1
		MS20470AD6-10		.RIVET		4
R	- 2	DK100	**	.BEACON - (V94970) (UNDERWATER ACOUSTIC)		1
				-000-		
			*	FOR BRKDN SEE C-57-473-000/MS-000		
			**	IAW C-12-114-000/CF-501		

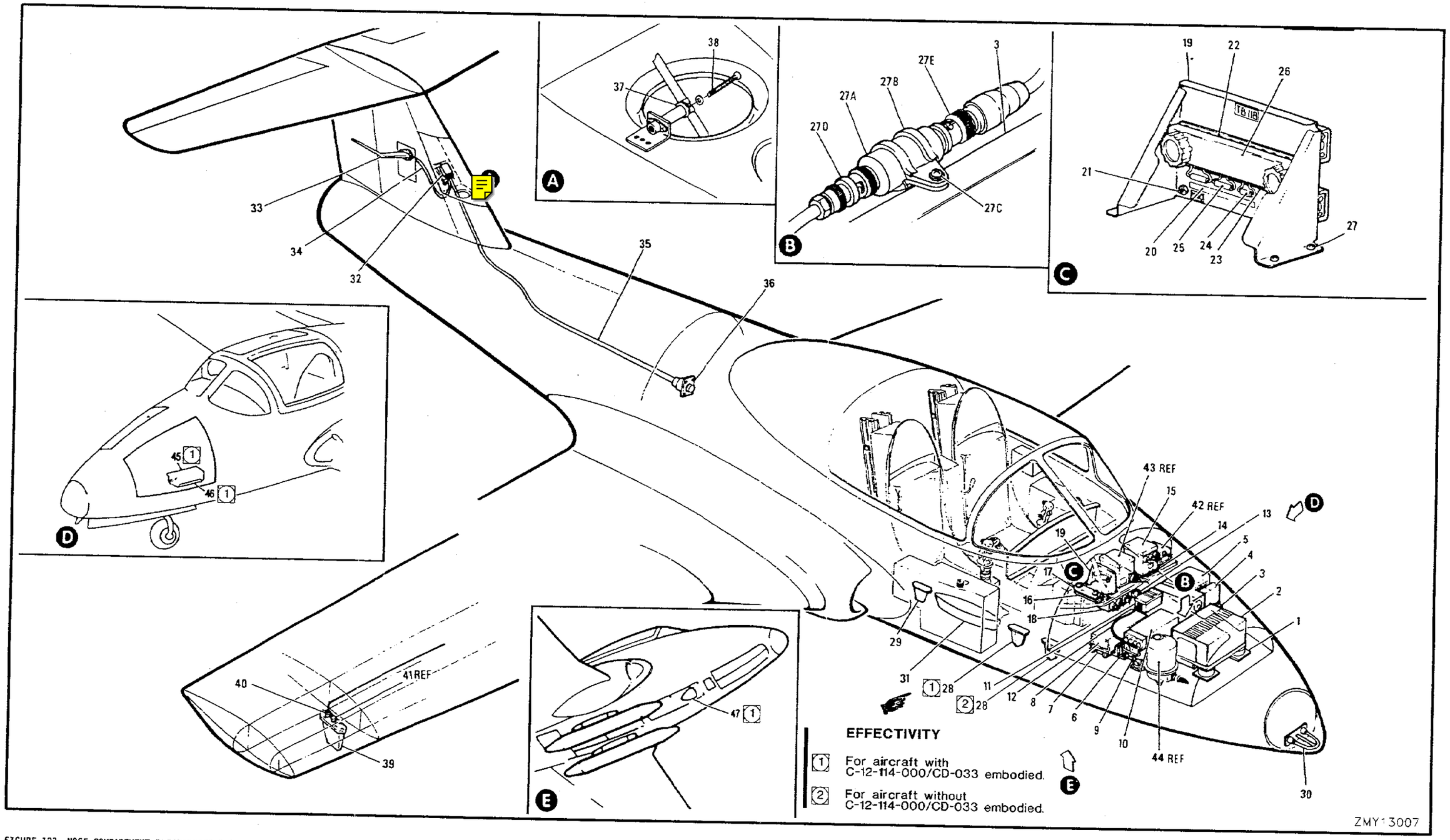

FIGURE 123 NOSE COMPARTMENT ELECTRONICS & ANTENNAS

FIGURE AND INDEX NUMBER	GROUP	ELECTRONIC EQUIPMENT	EFFEC-TIVITY	UNITS PER ASSY
	MAJOR ASSEMBLY	NOSE COMPARTMENT ELECTRONICS & ANTENNAS		
	PART NUMBER	1 2 3 4 5 6 7 NOMENCLATURE		
123 -	41A-42100 *	ELECTRICAL & ELECTRONIC EQUIP INSTL - NOSE (SEE SECTION 12)		REF
	41A-71010	.ELECTRONIC EQUIP INSTL - FUS STA 110 BHD (SEE FIG. 124)		REF
- 1	MT1477/ARC552	.BASE - (V90095) (UHF RADIO MOUNTING)		1
R	MS35207-263	.SCREW		16
	AN960PD10L	.WASHER		16
- 2	RT5011/ARC552	.RECEIVER-TRANSMITTER - (V90095) (UHF RADIO) FOR BRKDN SEE C-50-121-000/MZ-000		1
- 3	MT5154/ARN504V **	.BASE - TACAN RCVR-XMTR MOUNTING (MODIFIED PER C-12-114-000/CF-393)		1
R	MS35207-263	.SCREW		16
	AN960C10L	.WASHER		16
- 4	MX5163/ARN504V **	.ADAPTER - TACAN NAVIGATIONAL SET		1
- 5	RT5036/ARN504V **	.RECEIVER-TRANSMITTER - TACAN		1
- 6	41A-51225	.BASE ASSY - VOR/ILS & IFF/SIF MOUNTING		1
R	MS35207-263	.SCREW		16
	AN960C10L	.WASHER		16
- 7	MT4781/ARN	.BASE - (V13499)(TYPE 390R2- VOR/ILS MOUNTING)		1
	MS24693-51	.SCREW		4
	AN960D8L	.WASHER - (IAW C-12-114-000/CD-031)		4
	MS21042L08	.NUT		4
- 8	MT5069/ARN508	.RECEIVER - (V13499) (TYPE V1R31A VOR/ILS) FOR BRKDN SEE C-57-386-000/MS-000		1
- 9	C74C47075-1	.BASE - IFF/SIF RCVR-XMTR MOUNTING (MOD)		1
	MS35207-265	.SCREW		8
	AN960C10L	.WASHER		8
	MS21044N3	.NUT		8
-10	RT862A/APX77	.RECEIVER-TRANSMITTER - (V80249) (IFF/SIF) FOR BRKDN SEE C-59-122-A00/MY-000		1
	MT3513/APX	.BASE - (SWC) (IFF TEST SET MOUNTING)		1
	MS35207-265	.SCREW		4
	AN960C10L	.WASHER		4
	MS21044N3	.NUT		4
-11	TS1843B/APX	.TEST SET - (V07214) (TRANSPONDER SET) FOR BRKDN SEE C-59-122-000/MS-000		1
-12	C74B47071-1	.CABLE ASSY - RF (IFF/SIF)		1
	AVL45-040	..PLUG - (V04073)		2
	C74F47081-1	.HARNESS ASSY - 1FF/S1F WIRING (SEE FIG. 125)		REF
-13	M5757/1-021	..RELAY - (IFF BAILOUT K1SX)		1
	1N649	..DIODE		1
	MS35206-327	.SCREW		2
	AN960C6L	.WASHER		2
	MS21044N06	.NUT		2
-14	MT5064/ARC504	.BASE - (V90095) (EMY UHF RCVR-XMTR MOUNTING)	A	1
	MS24693-272	.SCREW		6
-15	RT5014/ARC504	.RECEIVER-TRANSMITTER - (V90095) (EMY UHF) FOR BRKDN SEE C-50-117-000/MZ-000	A	1
-16	MS27212-1-12	.TERMINAL BLOCK ASSY - (TB47)		1
	S1307V1-12	.STRIP - (V88308)		1
	AN515-4R8	.SCREW		3
	AN960D4L	.WASHER		3
	MS21042L04	.NUT		3
	MS25227-1	.STRIP		2
	MS25227-2	.STRIP		1
	MS25226-2-2	.BUS - (ON POSTS 3 & 4)		1
	MS25226-2-5	.BUS - (ON POSTS 7 TO 11)		1
	AN960-6	.WASHER		12
	MS21042L06	.NUT		12
-17	MS18029-1S12	.SHIELD		1
	*	MODIFIED BY C-12-114-000/CF-373, & CD-030 & 031		
	**	FOR BRKDN SEE C-57-364-000/MY-000		
	A	FOR AIRCRAFT WITHOUT C-12-114-000/CF-507 EMBODIED		

FIGURE AND INDEX NUMBER	GROUP	ELECTRONIC EQUIPMENT	EFFEC-TIVITY	UNITS PER ASSY
	MAJOR ASSEMBLY	NOSE COMPARTMENT ELECTRONICS & ANTENNAS		
	PART NUMBER	1 2 3 4 5 6 7 NOMENCLATURE		
123 -	41A-51215	.ROTARY SEL & TB BRACKET INSTL - VOR/TACAN		NP
-18	172934-001	.ROTARY SELECTOR - (V81840) (VOR/TACAN)		1
	MS35207-265	.SCREW		4
	NAS43DD3-20	.SPACER		4
	AN960-10L	.WASHER		4
	41A-51220	.BRACET ASSY - RESISTOR MTG TERMINAL BLOCK		1
-19	41A-51221	..BRACKET		1
-20	41A-51220-2	..DECAL - (RESISTOR IDENT)		1
	41A-51222-4	..DECAL - (RESISTOR IDENT)		1
-21	MS35207-265	..SCREW - (GROUD STUD)		2
	MS35333-39	..LOCK WASHER		2
	AN960-10L	..WASHER		4
	MS35338-43	..LOCK WASHER		4
	MS35650-302	..NUT		4
-22	MS27212-1-12	..TERMINAL BLOCK		3
-23	S1307H1-12	..STRIP - (V88308) (IDENT)		3
	MS35206-216	..SCREW		6
	AN960D4L	..WASHER		6
	MS21042L04	..NUT		6
	MS3373B1	..STRIP		2
	MS3373A1	..STRIP		4
	MS25226-2-2	..BUS BAR		1
-24	1N3613	..DIODE		1
-25	RC32GF561K	..RESISTOR		7
	RC32GF331K	..RESISTOR		3
	RC32GF222K	..RESISTOR		1
	RC32GF151K	..RESISTOR		1
	RC32GF681K	..RESISTOR		1
	AN960-6L	..WASHER		36
	MS21042L06	..NUT		36
-26	MS18029-1S12	..SHIELD		3
-27	MS35206-243	.SCREW		4
	AN960-8L	.WASHER		4
-27A	SCH-P51 **	FILTER - (V38000)		1
-27B	MS21919WCH13 **	CLAMP		1
-27C	MS35207-264 **	SCREW		1
	AN960-10L **	WASHER		1
	MS21042L3 **	NUT		1
	APX77-90A **	LEAD ASSY		1
-27D	16925 **	.CONNECTOR (V74868)		1
-27E	31-352	.CONNECTOR (V74868)		1
	41A-42101	ELECTRICAL & ELEK EQUIP INSTL - CENTRE FUS (MOD BY C-12-114-000/CD-031) (SEE FIG. 115)		REF
-28	AT256A/ARC	.ANTENNA - UHF (V78702)		1
R	82-F1115	.GASKET - UHF ANTENNA		1
	MS24694-54 ***	.SCREW		8
-29	AT741A	.ANTENNA - (V82152) (TACAN)		1
R	82-F1113	.GASKET		1
	MS24693-28	.SCREW		6
	NW4601102-1 ****	ANTENNA RELOCATION - UHF (REF SECTION 13)		REF
	MS24693-273 ****	.SCREW (ATTACHING UHF ANTENNA)		8
	41A-51218 *	ANTENNA INSTL - GLIDE SLOPE (NOSE)		NP
-30	AS5071/ARN	.ANTENNA - (CSL) (GLIDE SLOPE)		1
	AN509-10R10	.SCREW		6
	*	IAW C-12-114-000/CD-031		
	**	IAW C-12-114-000/CF-393		
	***	FOR AIRCRAFT WITHOUT C-12-114-000/CD-033 EMBODIED		
	****	IAW C-12-114-000/CD-033		

FIGURE AND INDEX NUMBER	GROUP	ELECTRONIC EQUIPMENT	EFFEC-TIVITY	UNITS PER ASSY
	MAJOR ASSEMBLY	NOSE COMPARTMENT ELECTRONICS & ANTENNAS		
	PART NUMBER	1 2 3 4 5 6 7 NOMENCLATURE		
123 -	41A-51219 *	ANTENNA INSTL - MARKER BEACON		NP
- 31	AT640A/ARN	.ANTENNA - (CSL) (MARKER BEACON)		1
	AN502-10-8	.SCREW		8
	AN960D10	.WASHER		8
	41A-51216	ANTENNA INSTL - VOR/LOC (IAW C-12-114-000/CD-031)		NP
- 32	CV5116/ARN508 *	.HYBRID JUNCTION - (CSL)		1
	MS35206-215	.SCREW		4
	AN960D4L	.WASHER		4
- 33	AS5084/ARN508 *	.ANTENNA ELEMENT - (CSL)		2
	MS24694S53	.SCREW		12
- 34	41A-51216-8	.HARNESS ASSY - (RF CABLE)		2
	K59-78	..PLUG - (V91836) (RF CONNECTOR)		1
	KC59-224	..PLUG - (V91836) (RF CONNECTOR)		1
- 35	RG115A/U **	.HARNESS ASSY - (RF CABLE)		1
	MS21919WCH7 **	..CLAMP		11
	KC59-86	..PLUG - (V91836) (RF CONNECTOR)		1
- 36	KN19-30	.RECEPTACLE - (V91836) (RF CONNECTOR)		1
	MS35206-245	.SCREW		4
	AN960D8L	.WASHER		4
	MS21042L08	.NUT		4
- 37	MS21919WCH6	.CLAMP		1
- 38	MS35206-251	.SCREW		1
	NAS43DD3-64	.SPACER		1
	AN960D8L	.WASHER		1
	41A-42103-61	ELECTRICAL EQUIP INSTL - STBD WING (SEE SECTION 12)		REF
- 39	AT741A	.ANTENNA - (V82152) (IFF/SIF)		1
R	82-F1113	.GASKET		1
	MS24693-28	.SCREW		6
	41A-70380	LINE ASSY - IFF/SIF TRANSMISSION (SEE FIG. 125)		REF
- 40	KH59-11	.PLUG - (CED) (ANTENNA DISCONNECT)		1
- 41	UG88D/U	PLUG - (P102SX IFF/SIF ANTENNA TEST DISC) (SEE FIG. 128)		REF
- 42	INST8-7	AMPLIFIER - COMPASS SIGNAL REPEATER (SEE SECTION 14)		REF
- 43	653278	AMPLIFIER - TYPE A-2/C (SEE SECTION 14)		REF
- 44	673447	GYRO - CONTROL DIRECTIONAL (SEE SECTION 14)		REF
- 45	622-6812-001 ***	RECEIVER - ADF (V13499) (DF-206A) (REF FIGURE 128A)		REF
		OR		
	622-6812-003 ***	RECEIVER - ADF (V13499) (DF-206A) (REF FIGURE 128A)		REF
- 46	622-7210-002 ***	MOUNTING BASE - ADF RCVR (REF FIGURE 128A)		REF
- 47	622-6820-001 ***	ANTENNA - (V13499) (DF-206A) (REF FIGURE 128A)		REF
		-OOO-		
	*	SUPPLIED AS PART OF OE5008/ARN508		
	*	SUPPLIED AS PART OF 0E5008/ARN508 ANTENNA SYSTEM (TYPE 837B-1)		
	**	IAW C-12-114-000/CF-492		
	***	IAW C-12-114-000/CD-033		

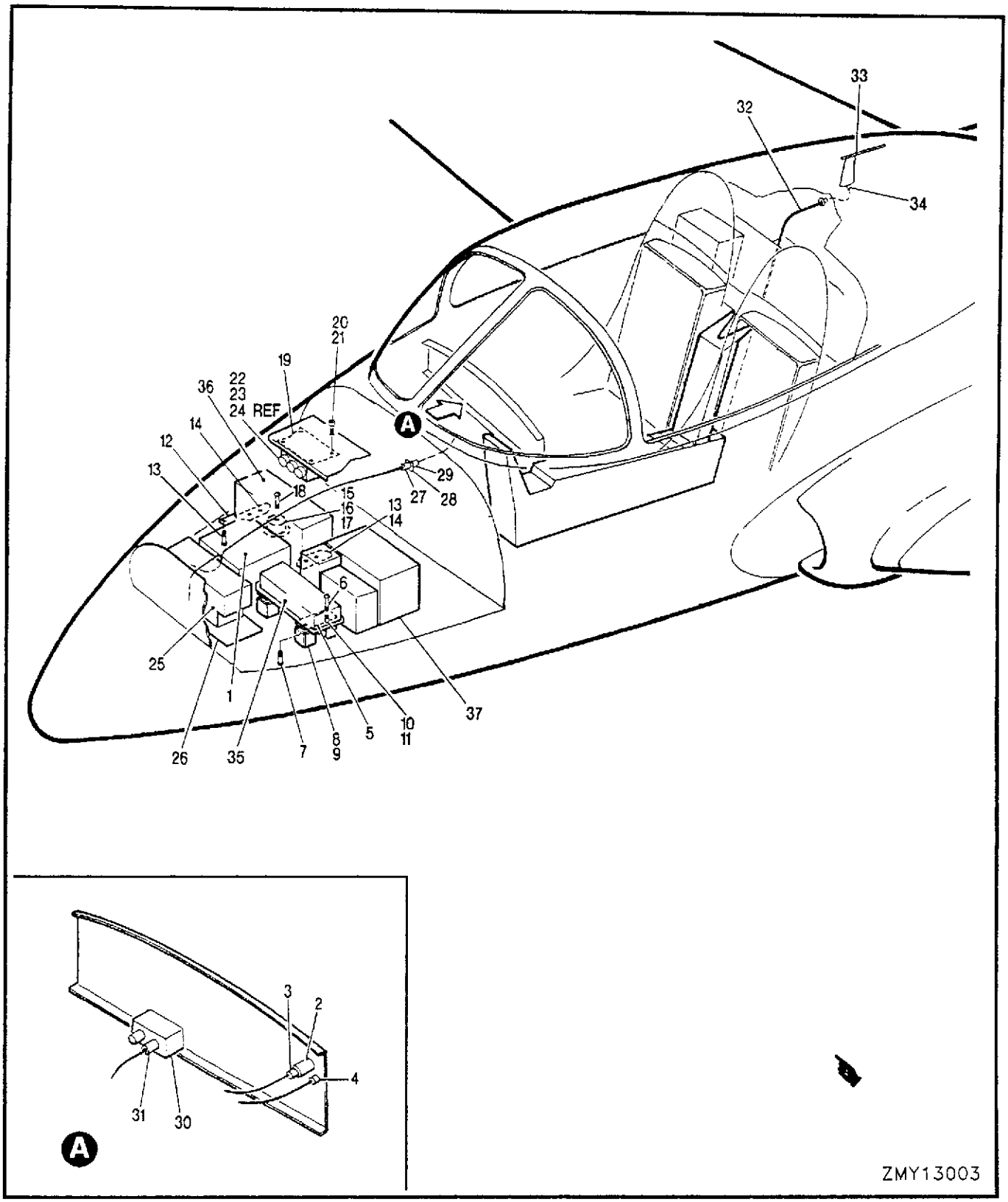

FIGURE 123A NOSE COMPARTMENT ELECTRONICS & ANTENNAS (FOR AIRCRAFT WITH C-12-114-000/CF-459 OR /CF-461, /CF-462, /CF-463, AND /CF-464 EMBODIED)

FIGURE AND INDEX NUMBER	GROUP	ELECTRONIC EQUIPMENT	EFFEC-TIVITY	UNITS PER ASSY
	MAJOR ASSEMBLY	NOSE COMPARTMENT ELECTRONICS & ANTENNAS (FOR AIRCRAFT WITH C-12-114-000/CF-459 OR /CF-461, /CF-462, /CF-463, AND CF-464 EMBODIED)		
	PART NUMBER	1 2 3 4 5 6 7 NOMENCLATURE		
123A	K41A-58044-2	DUAL STATIC INVERTER & UHF SYSTEM INSTL (IAW C-12-114-000/CF-461) (SEE SECTION 12)		REF
- 1	RT5078	.RECEIVER – TRANSMITTER (UHF) (RETR1RU) (V36673)		1
	K41A-58043-20	.TRAY – MOUNTING (MP1RU)		1
	MS35207-268	.SCREW		4
	AN960D10L	.WASHER		4
	MS27473T18B-32S	.CONNECTOR - (P7RU)		1
	MS3154-18	.ADAPTOR		1
- 2	ID-1961B/ARC-164(V) *	.INDICATOR - UHF FREQUENCY (M1RU) (V37695)		1
	MS35214-30 *	.SCREW		4
- 3	67-06C20-37S *	.CONNECTOR - (P12RU) (V02660)		1
- 4	MS25089-4C *	.SWITCH - PRESET FREQUENCY READ (S4RU)		1
	K41A-58043-26 *	.DECAL - (PRESET FREQUENCY)		1
	K41A-58045-30	KIT ASSEMBLY – VIR 31A/APX77 EQUIPMENT RELOCATION (IAW C-12-114-000/CF-463)		NP
- 5	K41A-58045-8	.ADAPTER PLATE ASSEMBLY - (FOR MT5069/ARN508)		2
- 6	MS24693-296	.SCREW		4
- 7	MS24693S251	.SCREW - (ON IFF/SIF RCVR/XMTR MTG BASE)		4
- 8	HT1-10	.SHOCKMOUNT - (V76005)		4
- 9	MS35207-269	.SCREW		16
	AN960D10L	.WASHER		16
-10	NAS43HT4-18	.SPACER		4
-11	MS25083-2BC5	.STRAP - BONDING		2
-12	K41A-58045-32	.PLATE - (FOR RT862/APX77)		2
-13	MS24693-274	.SCREW		8
-14	K41A-58045-34	.SPACER		2
-15	B64-CB-10	.SHOCKMOUNT - (V81860)		4
-16	MS25083-2BC5	.STRAP - BONDING		2
-17	MS24693-273	.SCREW		16
	AN960D10	.WASHER		16
	MS21042L3	.NUT		16
-18	MS35207-266	.SCREW		8
-19	K41A-58045-20	.PLATE - MOUNTING ASSEMBLY		1
-20	MS35207-263	.SCREW		4
-21	NAS43DD3-28	.SPACER		4
-22	M23329/3-08	.CONNECTOR - (VB190X)		2
-23	M23329/3-01-03	.CONNECTOR - (VB190X)		2
-24	172934-001	.ROTARY SELECTOR - (SEE FIGURE 123)		REF
	K41A-58042-2	VHF SYSTEM INSTL - (IAW C-12-114-000/CF-464)		NP
-25	622-1396-002	.RECEIVER - TRANSMITTER (AN/ARC-511 VHF) (RETR1RV) (V13499)		1
-26	K41A-58042-10	.BASE - VHF RCVR-XMTR MOUNTING (MADE FROM 622-1196-001) (M1RV) (V13499)		1
	MS25083-2BC5	..STRAP - BONDING		4
	NAS517-4-2	..SCREW		4
	HT1-10	.SHOCKMOUNT - (V76005)		4
	K41A-58042-12	.SPACER		2
	MS35276-269	.SCREW		16
	AN960D10L	.WASHER		16
	DPX2MA4WIS40W1S	.CONNECTOR - XCVR (V71468) (P1ARV/P1BRV)		1
	33B0203			
	MS35489-3	.GROMMET		1
-27	MS3476L20-41P	.CONNECTOR - (P2RV)		1
-28	MS3119E20-41	.RECEPTACLE - (J2RV)		1
	*	IAW C-12-114-000/CF-429		

FIGURE AND INDEX NUMBER	GROUP: ELECTRONIC EQUIPMENT MAJOR ASSEMBLY: NOSE COMPARTMENT ELECTRONICS & ANTENNAS (FOR AIRCRAFT WITH C-12-114-000/CF-459 OR /CF-461, /CF-462, /CF-463, AND CF-464 EMBODIED)		EFFEC-TIVITY	UNITS PER ASSY
	PART NUMBER	1 2 3 4 5 6 7 NOMENCLATURE		
123A -29	MS3476L20-41S	.CONNECTOR - (P3RV)		1
	057-0688-002	.BACK SHELL - (V71468)		2
	10-101949-20	.GASKET - (V77820)		1
	MS35206-215	.SCREW		4
	AN960D4L	.WASHER		4
	MS21042L04	.LOCKNUT		4
	K41A-58042-8	.LABEL		1
R -30	522-2447-552	.CONTROL PANEL - (NAV/COMM) (E1RV) (V13499)		1
-31	MS3476L20-41SW	.CONNECTOR - (P4RV)		1
	057-0709-001	.BACK SHELL - (V71468)		1
-32	K41A-58042-4	.CONDUIT		1
	MS21103D6	.CLAMP		1
	MS35207-263	.SCREW		1
	AN960-10L	.WASHER		2
	MS21044N3	.LOCKNUT		1
	MS21919WDG6	.CLAMP		1
	AN743-12	.BRACKET		1
	MS35207-264	.SCREW		2
	AN960-10L	.WASHER		2
	MS35338-43	.LOCKWASHER		2
	MS35650-302	.NUT		2
	MS2044N3	.LOCKNUT		2
-33	16-21B	.ANTENNA - (VHF) (V63563)		1
	6930A/16-21B	.GASKET - (V63563)		1
	MS35207-266	.SCREW		6
-34	MS9012/16-0013	.CONNECTOR - (P5RV) (V74868) (OPTIONAL PART NO. M23329/3-01-03)		1
	249-1390-001	.INSERT - (CO-AXIAL) (V71468)		1
	M83519/1-2	.SLEEVE - SOLDER (V81349)		15
	MS21919-3	.CLAMP		AR
	S548152K2215	.BUTTON		1
	MS21266-3	.GROMMET		AR
	NAS43DD3-28	.SPACER		10
-35	MT5069/ARN508	RECEIVER – (VOR/ILS) (SEE FIGURE 123)		REF
-36	RT862/APX77	RECEIVER – TRANSMITTER (IFF/SIF) (SEEFIGURE 123)		REF
-37	RT5036/ARN504V	RECEIVER-TRANSMITTER - TACAN (SEE 123)		REF
	MS35207-263 *	SCREW - (USE ON SHOCKMOUNTS)		16
	AN960D10L *	WASHER - (USE ON SHOCKMOUNTS)		16
	MS25036-102 *	TERMINAL LUG		2
	MS25036-103 *	TERMINAL LUG		3
	MS25036-149 *	TERMINAL LUG		2
	MS25036-153 *	TERMINAL LUG		4
	MS21919WDG7 *	CLAMP		2
	MS21919WDG9 *	CLAMP		2
	MS21919WDG12 *	CLAMP		2
	MS21919WDG14 *	CLAMP		1
	*	IAW C-12-114-000/CF-464		

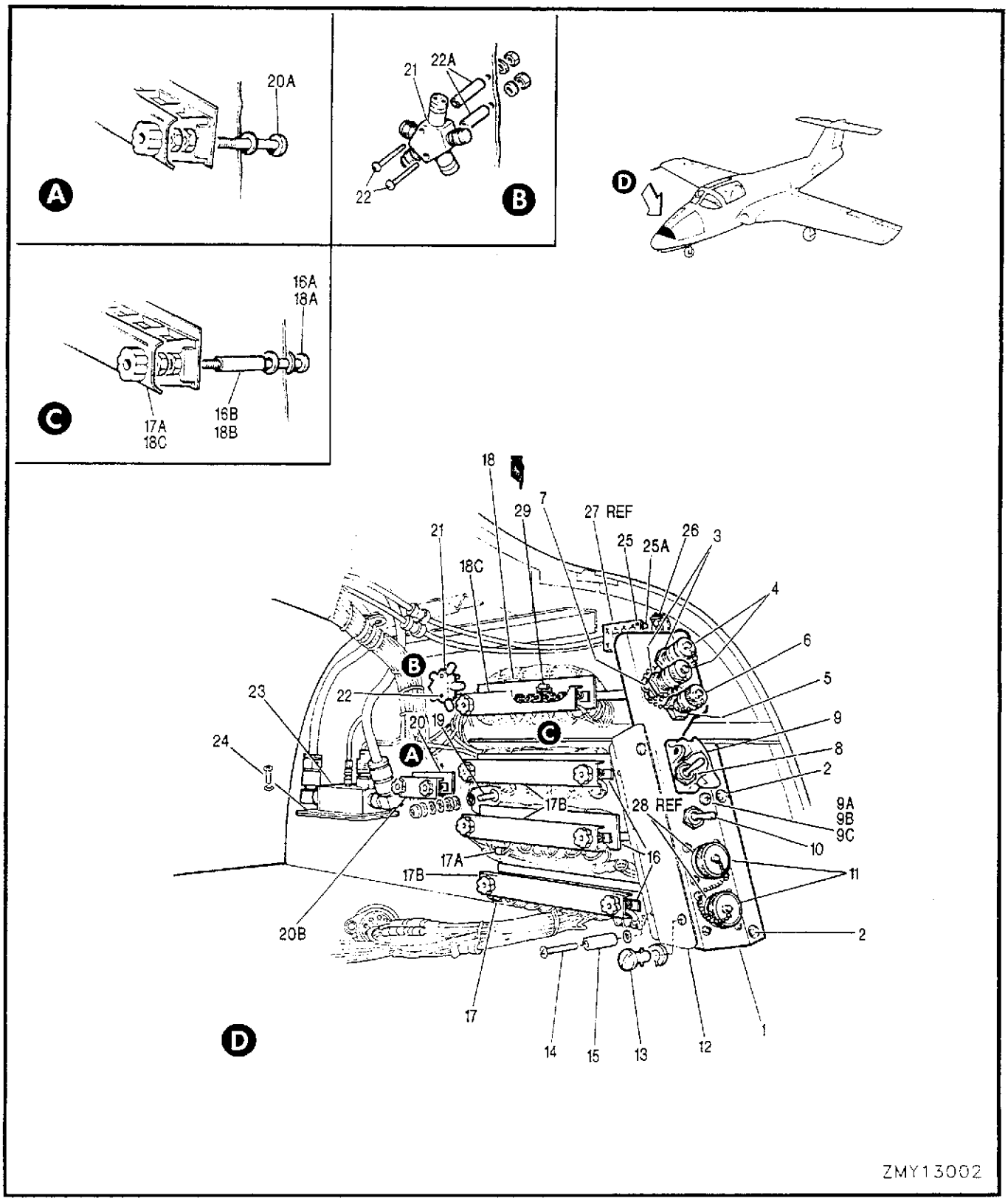

FIGURE 124 FUSELAGE STA 110 BULKHEAD ELECTRONIC

	FIGURE AND INDEX NUMBER	GROUP	ELECTRONIC EQUIPMENT	EFFEC-TIVITY	UNITS PER ASSY
		MAJOR ASSEMBLY	FUSELAGE STA 110 BULKHEAD ELECTRONIC		
		PART NUMBER	1 2 3 4 5 6 7 NOMENCLATURE		
	124 -	41A-71010	ELECTRONIC EQUIP. INSTL -FUSELAGE STA 110 BULKHEAD (SEE FIG. 123)		NP
		41A-71040-20	.PANEL ASSY - FUS STA 110 BULKHEAD		1
	- 1	41A-71040-18	..PANEL - FUS STA 110 BULKHEAD		1
		5R2-1	..RECEPTACLE - (V71286)		2
R	- 2	MS35206-228	.SCREW		4
		AN960D6L	.WASHER		4
	- 3	UG492D/U	.ADAPTER - (V02660) (TACAN & SIF TEST)		2
	- 4	CW123/U	.CAP - (V02660)		2
			OR		
		CW123A/U	.CAP - (V02660)		
	- 5	UG492D/U	.ADAPTER - (V02660) (UHF TEST)		1
	- 6	CW123/U	.CAP - (V02660)		1
			OR		
		CW123A/U	.CAP - (V02660)		
R	- 7	MS35206-215	.SCREW		1
		AN960D4L	.WASHER		1
		MS21043-04	.NUT		1
	- 8	MS35059-30	.SWITCH - (SEAT EJECTION TEST)		1
	- 9	MS25224-3	.GUARD		1
	- 9A	NS5W0106	.INSULATOR - STAND OFF		1
	- 9B	1N540	.DIODE - (TXS) (SEMI CONDUCTOR)		1
	- 9C	AN515-6R	.SCREW		2
		MS35338-41	.LOCK WASHER		2
	-10	MS35058-30	.SWITCH - (UHF EMERGENCY CHANNEL 2) (S1RU)	A	1
	-11	MS3181-16C	.CAP		2
		41A-71040-4	.COVER ASSY		1
	-12	41A-71040-8	..COVER		1
	-13	5S1-4	..STUD - (V71286)		2
		5S3-1	..WASHER - (V71286)		2
R	-14	MS35206-238	.SCREW		2
	-15	NAS43DD1-98	.SPACER		2
		AN960D6L	.WASHER		2
	-16	MS27212-1-12	.TERMINAL BLOCK ASSY - (TB101, 102 & 103)		3
		S1307H1-12A	.STRIP - (V88308)		3
R	-16A	MS35206-325	.SCREW - (TERMINAL BLOCK ATT)		6
	-16B	NAS43DD1-64	.SPACER		6
		AN960D4L	.WASHER		6
		MS21042L04	.NUT		6
		MS25227-1	.STRIP		6
	-17	RC32GF471K	.RESISTOR - (V75042) (ON TB101 POST 2 & 3)		1
		MS25226-2-4	.BUS - (ON TB101 POST 10, 11 & 12)		1
	-17A	1N1096	.DIODE - (TXS) (ON TB102 POST 2 & 3)		
		MS25226-2-2	.BUS - (ON TB102 POST 11 & 12)		1
		AN960-6	.WASHER		36
		MS21042L06	.NUT		36
	-17B	MS18029-1S12	.SHIELD ASSY - (V88308)		3
	-18	MS27212-1-10	.TERMINAL BLOCK ASSY - (TB104)		1
		S1307H1-10A	.STRIP - (V88308)		1
R	-18A	MS35206-325	.SCREW		2
	-18B	NAS43DD1-64	.SPACER		2
		AN960D4L	.WASHER		2
		MS21042L04	.NUT		2
		AN960-6	.WASHER		10
		MS21042L06	.NUT		10
		MS25227-1	.STRIP		2
	-18C	MS18029-1S10	.SHIELD		1
		A	FOR AIRCRAFT WITHOUT C-12-114-000/CF-507 EMBODIED		

	FIGURE AND INDEX NUMBER	GROUP	ELECTRONIC EQUIPMENT	EFFEC-TIVITY	UNITS PER ASSY
		MAJOR ASSEMBLY	FUSELAGE STA 110 BULKHEAD ELECTRONIC		
		PART NUMBER	1 2 3 4 5 6 7 NOMENCLATURE		
R	124 -19	MS35207-265	.SCREW - (GROUND STUD)		1
		MS35335-32	.LOCK WASHER		1
		AN960D10	.WASHER		2
		MS35338-43	.LOCK WASHER		2
		AN345-10	.NUT		2
	-20	MS27212-1-3	.TERMINAL BLOCK ASSY - (TB105)		1
		S1307H1-3A	.STRIP - (V88308)		1
R	-20A	MS35206-215	.SCREW		2
		AN960D4L	.WASHER		2
		MS21042L04	.NUT		2
		AN960-6	.WASHER		3
		MS21042L06	.NUT		3
		MS25227-1	.STRIP		2
	-20B	MS18029-1S3	.SHIELD		1
	-21	11300	.SWITCH - (V82152) (COAXIAL RELAY) (K1RU)	A	1
R	-22	MS35206-330	.SCREW		2
	-22A	NAS43DD1-64	.SPACER		2
		AN960D6L	.WASHER		2
	-23	CU5038/ARC552	.COUPLER - DIRECTIONAL - (V90095) (FOR BKDN SEE C-50-121-000/MZ-000)		1
R	-24	MS35206-229	.SCREW		4
		AN960D6L	.WASHER		4
		MS21042L06	.NUT		4
R	-25	MS35206-329	.SCREW - (RESISTOR BOARD RETAINING)		2
	-25A	NAS43DD1-64	.SPACER		2
		AN960D6L	.WASHER		4
	-26	41A-43010	.BRACKET - RECTIFIER MOUNTING		1
	-27	41A-71043	RESISTOR BOARD ASSY - (SEE FIG. 125)		REF
	-28	PT00SE16-26S	RECEPTACLE - (MAIN & EMERGENCY UHF TEST) (SEE FIG. 125)		REF
		K41A-58041-2 *	INTERCOM SYSTEM INSTL - (SEE FIG. 126)		REF
	-29	RCR32G220KM *	.RESISTOR - (R2RU) (81349) (ON TB104 POST 7 AND 8)		1
			-OOO-		
		*	IAW C-12-114-000/CF-462		
		A	FOR AIRCRAFT WITHOUT C-12-114-000/CF-507 EMBODIED		

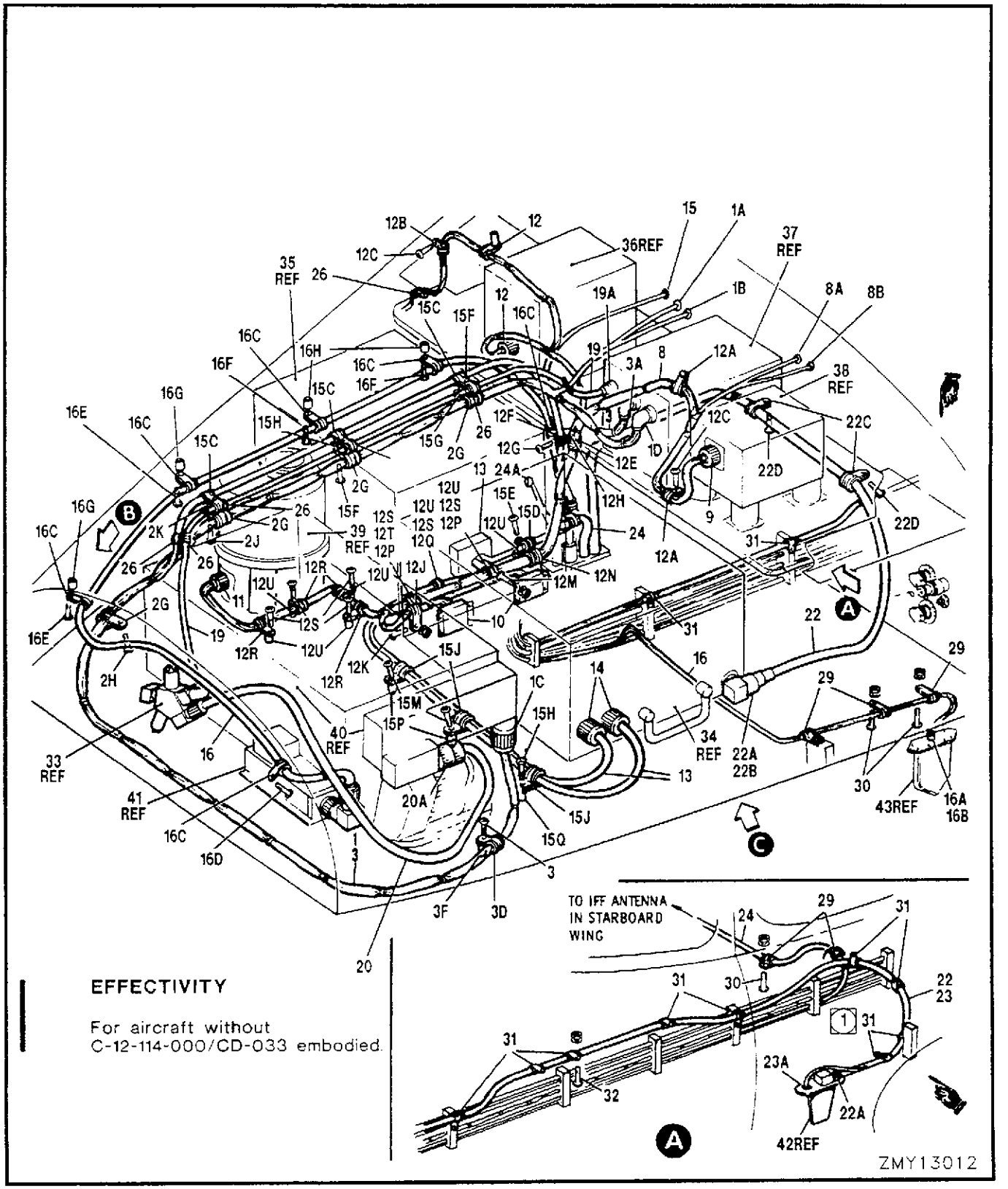

FIGURE 125 (SHEET 1 OF 2) NOSE COMPARTMENT ELECTRONIC HARNESSES

	FIGURE AND INDEX NUMBER	GROUP	ELECTRONIC EQUIPMENT	EFFEC-TIVITY	UNITS PER ASSY
		MAJOR ASSEMBLY	(SHEET 1 OF 2) NOSE COMPARTMENT ELECTRONIC HARNESSES		
		PART NUMBER	1 2 3 4 5 6 7 NOMENCLATURE		
	125 -	41A-43013	HARNESS INSTL - NOSE ELECTRICAL (SEE SECTION 12)		REF
	- 1	41A-70240-800	.HARNESS ASSY - UHF (FUS STA 149 TO NOSE EQUIPMENT BAY)		1
	- 1A	PT06SE20-41P	..PLUG - (BAC)(FUS STA 149 P1R4 DISCONNECT)		1
	- 1B	PT06SE16-23P	..PLUG - (BAC)(FUS STA 149 P3RU DISCONNECT)		1
	- 1C	165-44	..CONNECTOR - (V02660) (UHF RCVR/XMTR P7RU)		1
	- 1D	PT08SE14-15S	..PLUG - (BAC) (UHF EMERGENCY XMTR P8RU)	A	1
		41A-71043	..RESISTOR BOARD ASSY		1
	- 2	41A-71043-2	...BLOCK - MOUNTING		1
		NAS707T2	...TERMINAL		8
	- 2A	CL44BJ250TP1	...CAPACITOR - (V75042)		2
	- 2B	TY13	...TY-RAP - (TBC)		1
R	- 2C	MS35206-215	...SCREW		1
		AN960D4L	...WASHER		1
		MS21042L04	...NUT		1
	- 2D	MS21919WDG11	.CLAMP		1
R	- 2E	MS35206-252	.SCREW		1
	- 2F	NAS43DD3-80	.SPACER		1
		AN960PD8L	.WASHER		1
	- 2G	MS21919WDG13	.CLAMP		4
R	- 2H	MS35206-245	.SCREW		1
R	- 2J	MS35206-332	.SCREW		1
	- 2K	NAS43DD3-40	.SPACER		1
		AN960PD8L	.WASHER		2
	- 3	41A-70241	.HARNESS ASSY - UHF (EMERGENCY TRANSCEIVER)		1
	- 3A	PT08SE12-10P	..PLUG - (BAC) (P6RU EMERGENCY TRANSMITTER)	A	1
	- 3B	MS21919WDG9	.CLAMP		2
R	- 3C	MS35206-245	.SCREW		2
		AN960PD8L	.WASHER		2
	- 3D	MS21919WDG6	.CLAMP		1
R	- 3E	MS35206-247	.SCREW		1
	- 3F	NAS43DD3-24	.SPACER		1
		AN960PD8L	.WASHER		1
	- 4	41A-70243	.HARNESS ASSY - UHF (MAIN RAPID TEST FACILITY)		1
	- 4A	PT00SE16-26S	..RECEPTACLE - (BAC) (J104RU UHF MAIN RAPID TEST)	A	1
	- 4B	41A-70244-800	.HARNESS ASSY - UHF (EMERGENCY RAPID TEST FACILITY)		1
	- 4C	PT00SE16-26S	..RECEPTACLE - (BAC) (J105RU UHF EMERGENCY RAPID TEST)		1
	- 5	1N249B	..RECTIFIER - (SILICON POWER)		1
	- 6	41A-70245	.HARNESS ASSY - UHF (TEST SWITCHES)		1
	- 7	41A-70247	.HARNESS ASSY - UHF (DIRECTIONAL COUPLER)		1
	- 7A	PT06E8-4P	..PLUG - (BAC) (P5RU DIRECTIONAL COUPLER)		1
	- 8	41A-70270	.HARNESS ASSY - TACAN (FUS STA 149 TO NOSE EQUIPMENT BAY)		1
	- 8A	PT06SE24-61P	..PLUG - (BAC) (P22 STA 149 DISCONNECT)		1
	- 8B	PT06SE10-6S	..PLUG - (BAC) (P20 STA 149 DISCONNECT)		1
	- 9	PT06SE20-41S	..PLUG - (BAC) (COMPASS SIGNAL REPEATER)		1
	-10	DPA32-33S	..CONNECTOR - (CED) (TACAN RCVR/XMTR)		2
		DPD33(11612)	..SHELL - (CED) (JUNCTION)		2
		AN3420-7	..BUSHING		2
	-11	MS3106R20-29S	..PLUG - (DIRECTIONAL GYRO)		1
	-12	MS3106R20-27S	..PLUG - (COMPASS AMPLIFIER A2C)		1
		MS3420-84	..BUSHING		2
		MS3420-10A	..BUSHING		2
		MS3420-12	..BUSHING		2
		MS3057-12A	..CLAMP		2
	-12A	MS21919WDG8	.CLAMP		2
	-12B	MS21919WDG9	.CLAMP		1
R	-12C	MS35206-245	.SCREW		2
		AN960PD8L	.WASHER		2
		A	FOR AIRCRAFT WITHOUT C-12-114-000/CF-507 EMBODIED		

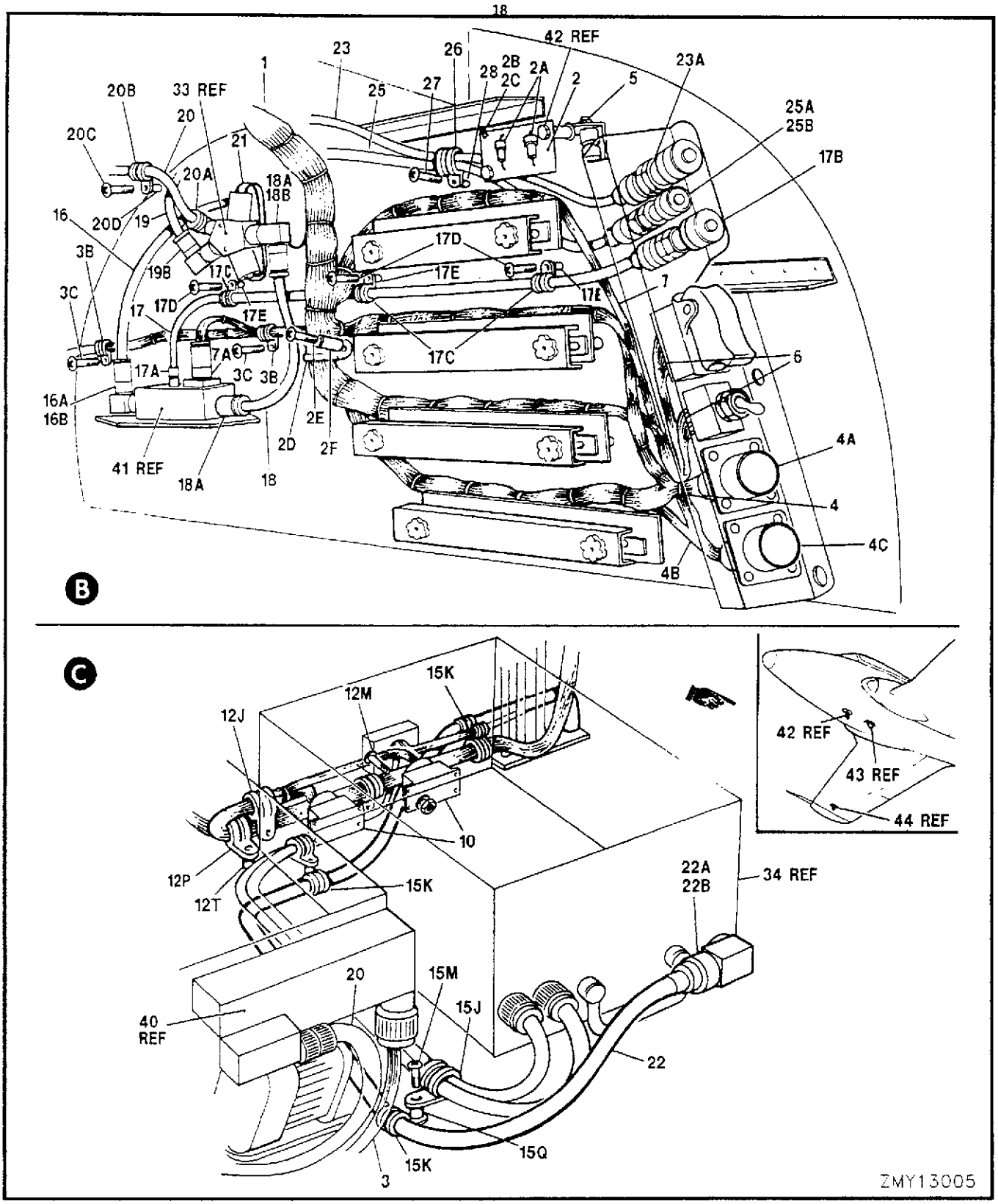

FIGURE 125 (SHEET 2 OF 2) NOSE COMPARTMENT ELECTRONIC HARNESSES

	FIGURE AND INDEX NUMBER	GROUP	ELECTRONIC EQUIPMENT	EFFEC-TIVITY	UNITS PER ASSY
		MAJOR ASSEMBLY	(SHEET 2 OF 2) NOSE COMPARTMENT ELECTRIC HARNESSES		
		PART NUMBER	1 2 3 4 5 6 7 NOMENCLATURE		
	125 -12D	MS21919WDG11	.CLAMP		1
	-12E	MS21919WDG12	.CLAMP		1
	-12F	MS21919WDG7	.CLAMP		1
R	-12G	MS35207-270	.SCREW		1
	-12H	NAS43DD3-48	.SPACER		1
		AN960PD10L	.WASHER		1
		MS21042L3	.NUT		1
	-12J	MS21919WH10	.CLAMP		1
R	-12K	MS35206-245	.SCREW		1
		AN960PD8L	.WASHER		1
		MS21042L08	.NUT		1
R	-12M	MS35206-229	.SCREW		8
		AN960PD6L	.WASHER		16
		MS21042L06	.NUT		8
	-12N	MS21919WDG14	.CLAMP		1
	-12P	MS21919WDG12	.CLAMP		1
	-12Q	MS21919WDG4	.CLAMP		1
	-12R	MS21919WDG8	.CLAMP		4
R	-12S	MS35206-247	.SCREW		7
	-12T	NAS43DD3-48	.SPACER		1
	-12U	NAS43DD3-24	.SPACER		6
		AN960PD8L	.WASHER		7
		C74F47081-1	.HARNESS ASSY - IFF/SIF NOSE EQUIP BAY DISC (AS PER C-12-114-000/CD-030)		1
	-13	DPJ59C10-34SA	..CONNECTOR - (CED) (IFF RECEIVER-XMTR)		1
		CE9218-5011	..SHELL - (CED) (JUNCTION)		1
	-14	31-352	..PLUG - (V02660) (IFF-TACANSUPPRESSION PULSE P102RN & P103RN DISCONNECT)		2
	-15	PT08SE24-61P(SR)	..PLUG - (V77820) (STA 149 PRESSURE BULKHEAD P5SX DISCONNECT)		1
		MS27291-2	..CLAMP		1
		MS24266R12B12N	..PLUG - (TS1843B/APX TEST SET DISCONNECT)		1
	-15A		DELETED		
	-15B		DELETED		
	-15C	MS21919WDG4	.CLAMP		3
	-15D	MS21919WDG14	.CLAMP		1
R	-15E	MS35206-252	.SCREW		1
R	-15F	MS35206-332	.SCREW		2
	-15G	NAS43DD3-48	.SPACER		1
	-15H	NAS43DD3-24	.SPACER		1
		AN960PD8L	.WASHER		3
	-15J	MS21919WDG4	.CLAMP		3
	-15K	MS21919WDG7	.CLAMP	085-	3
R		MS35206-247	.SCREW	001-084	3
R	-15M	MS35206-247	.SCREW	085-	2
R	-15N	MS35206-249	.SCREW	085-	1
		NAS43DD3-24	.SPACER	001-085	3
	-15P	NAS43DD3-24	.SPACER	085-	2
	-15Q	NAS43DD3-38	.SPACER	085-	1
		AN960PD8L	.WASHER		3
	-16	41A-70340	.LINE ASSY - UHF TRANSMISSION (DIRECTIONAL COUPLER TO ANTENNA)		1
	-16A	KN59-18	..PLUG - RF (CED) (AT COUPLER & ANTENNA)		2
	-16B	UG27C/U	..ADAPTER - (V02660) RF (AT COUPLER & ANTENNA)		2
	-16C	MS21919WDG7	.CLAMP		6
R		MS35206-245	.SCREW	001-050	3
R	-16D	MS35206-245	.SCREW	051-	1
R	-16E	MS35206-250	.SCREW	051-	2
R	-16F	MS35206-332	.SCREW		2
	-16G	NAS43DD3-48	.SPACER	051-	2
	-16H	NAS43DD3-40	.SPACER		2
		AN960PD8L	.WASHER		6
		MS21042L08	.NUT		1

	FIGURE AND INDEX NUMBER	GROUP	ELECTRONIC EQUIPMENT	EFFEC-TIVITY	UNITS PER ASSY
		MAJOR ASSEMBLY	(SHEET 2 OF 2) NOSE COMPARTMENT ELECTRIC HARNESSES		
		PART NUMBER	1 2 3 4 5 6 7 NOMENCLATURE		
	125 -17	41A-70341	.LINE ASSY - UHF TRANSMISSION (DIRECTIONAL COUPLER TO TEST RECEPTACLE)		1
	-17A	49200	..PLUG - RF (V02660) (AT DIRECTIONAL COUPLER)		1
	-17B	KC59-21	..PLUG - RF (CED) (AT TEST RECEPTACLE)		1
	-17C	MS21919WDG3	.CLAMP		3
R	-17D	MS35206-247	.SCREW		3
	-17E	NAS43DD3-16	.SPACER		3
		AN960PD8L	.WASHER		3
	-18	41A-70342	.LINE ASSY - UHF TRANSMISSION (DIRECTIONAL COUPLER TO COAXIAL RELAY)		1
	-18A	KN59-18	..PLUG - RF (CED) (AT COUPLER & RELAY)		2
	-18B	UG27C/U	..ADAPTER - (V02660) RF (AT COAXIAL RELAY)		1
	-19	41A-70343	.LINE ASSY - UHF TRANSMISSION (COAXIAL RELAY TO EMERGENCY TRANSCEIVER)		1
	-19A	KN59-18	..PLUG - RF (CED) (AT RELAY & TRANSCEIVER)		2
	-19B	UG27C/U	..ADAPTER - (V02660) RF (AT RELAY)		1
	-20	41A-70344	.LINE ASSY - UHF TRANSMISSION (COAXIAL RELAY TO MAIN TRANSCEIVER)		1
	-20A	KN59-18	..PLUG - RF (CED) (AT RELAY & TRANSCEIVER)		2
	-20B	MS21919WDG7	.CLAMP		1
R	-20C	MS35206-248	.SCREW		1
	-20D	NAS43DD3-24	.SPACER		1
		AN960PD8L	.WASHER		1
	-21	41A-70349	.HARNESS ASSY - UHF (COAXIAL RELAY TO NOSE EQUIPMENT BAY)		1
	-22	41A-70370	.LINE ASSY - TACAN TRANSMISSION (RECEIVER TO ANTENNA)		1
	-22A	UG212C/U	..ADAPTER - (V02660) RF(AT RECEIVER & ANTENNA)		2
	-22B	KH59-08	..PLUG - RF (CED) (AT RECEIVER TRANSMITTER)		1
		KH59-11	..PLUG - RF (CED) (AT ANTENNA)		1
	-22C	MS21919WDG7	.CLAMP	001-084	2
R	-22D	MS35206-245	.SCREW	001-084	2
		AN960PD8L	.WASHER	001-084	2
		MS21042L08	.NUT	001-084	2
	-23	41A-70371	.LINE ASSY - TACAN TRANSMISSION (TEST RECEPTACLE TO ANTENNA)		1
	-23A	KC59-21	..PLUG - RF (CED) (AT RECEPTACLE & ANTENNA)		2
	-24	41A-70380	.LINE ASSY - IFF/SIF TRANSMISSION (ANTENNA TO RECEIVER-TRANSMITTER)		1
	-24A	M39012-05-0001	..PLUG - (RCVR-XMTR ANTENNA DISCONNECT)		1
		UG27D/U	.ADAPTER		1
	-25	41A-70382	.LINE ASSY - IFF/SIF TRANSMISSION (WING ROOT TO TEST RECEPTACLE)		1
	-25A	UG88D/U	..PLUG		2
	-25B	KS89-05	..K-GRIP		2
	-26	MS21919WDG3	.CLAMP		11
R	-27	MS35206-250	.SCREW		1
	-28	NAS43DD3-48	.SPACER		1
		AN960PD8L	.WASHER		1
		41A-43012	TROUGH INSTL - FUSELAGE HARNESS (CLAMPS) (SEE SECTION 12)		REF
	-29	MS21919WDG7	.CLAMP		5
R	-30	MS35206-245	.SCREW		3
		AN960PD8L	.WASHER		3
		MS21042L08	.NUT		3
	-31	445-3-7-2-8	.CLIP - (V00502)		10
R	-32	MS35206-245	.SCREW		6
		AN960PD8L	.WASHER		6
R		MS21042L08	.NUT		6
	-33	11300	SWITCH - (K1RU COAXIAL RELAY) (SEE FIG. 124)		REF
	-34	RT5036/ARN504V	RECEIVER-TRANSMITTER - TACAN (SEE FIG. 123)		REF
	-35	RT862A/APX77	RECEIVER-TRANSMITTER - IFF/SIF (SEE FIG. 123)		REF

FIGURE AND INDEX NUMBER	GROUP	ELECTRONIC EQUIPMENT	EFFEC-TIVITY	UNITS PER ASSY
	MAJOR ASSEMBLY	(SHEET 2 OF 2) NOSE COMPARTMENT ELECTRIC HARNESSES		
	PART NUMBER	1 2 3 4 5 6 7 NOMENCLATURE		
125 -36	653278	AMPLIFIER - TYPE A-2/C CONTROL (SEE FIG. 130A)		REF
-37	RT5014/ARC504	RECEIVER-TRANSMITTER - UHF EMY (SEE FIG. 123)		REF
-38	INST8-7	AMPLIFIER - COMPASS SIGNAL REPEATER (SEE FIG. 130A)		REF
-39	90000	CONTROL - TYPE S-3A/C DIRECTIONAL GYRO (SEE FIG. 130A)		REF
-40	RT5011/ARC552	RECEIVER-TRANSMITTER - UHF (SEE FIG. 123)		REF
-41	CU5038/ARC552	COUPLER - (DC1RU UHF DIRECTIONAL) (SEE FIG. 124)		REF
R -42	AT256A/ARC	ANTENNA - UHF (SEE FIG. 123)		REF
R -43	AT741A	ANTENNA - TACAN (SEE FIG. 123)		REF
R -44	AT741A	ANTENNA - IFF/SIF (SEE FIG. 123)		REF
		-000-		

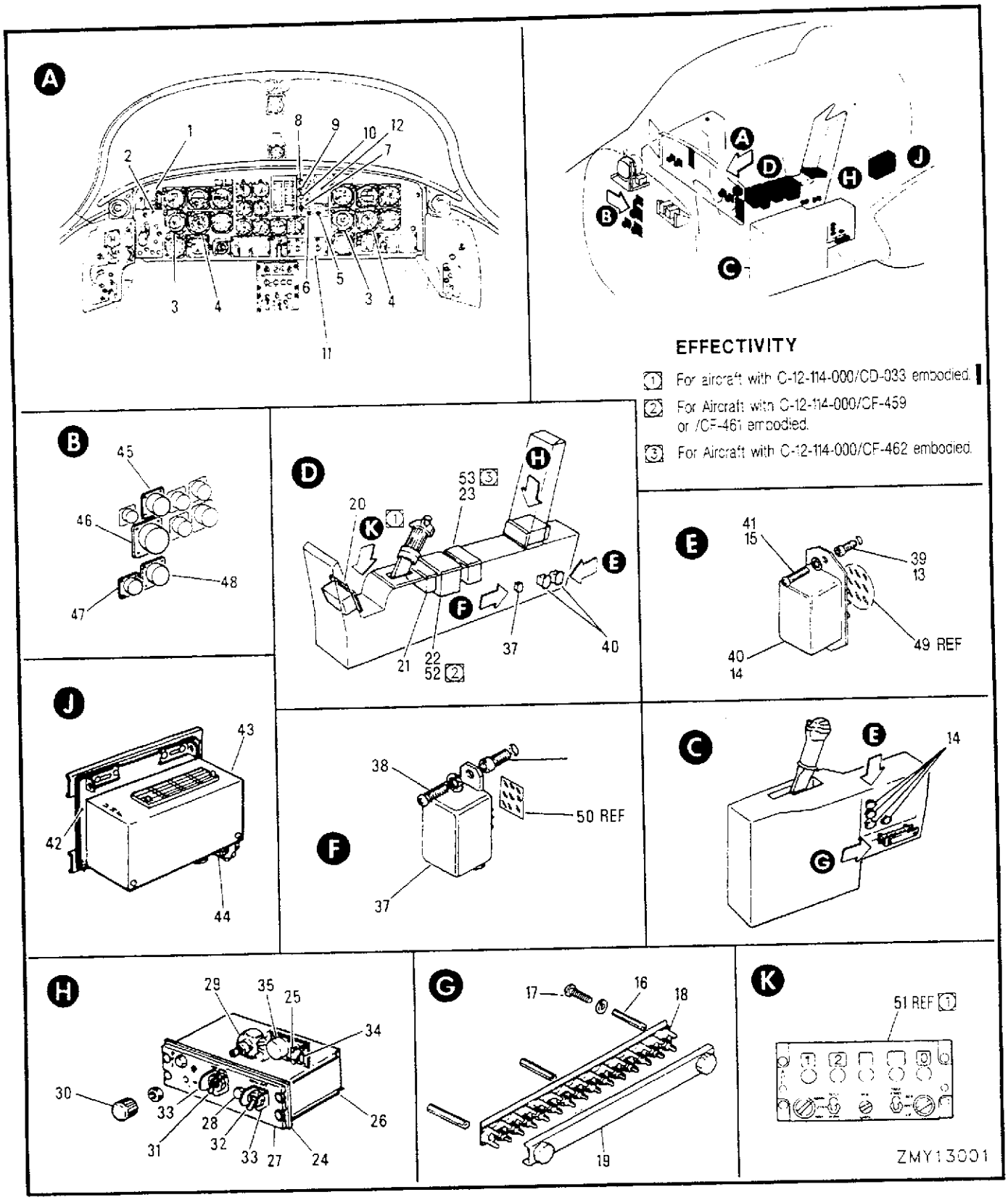

FIGURE 126 COCKPIT ELECTRONIC EQUIPMENT

FIGURE AND INDEX NUMBER	GROUP	ELECTRONIC EQUIPMENT	EFFEC-TIVITY	UNITS PER ASSY
	MAJOR ASSEMBLY	COCKPIT ELECTRONIC EQUIPMENT		
	PART NUMBER	1 2 3 4 5 6 7 NOMENCLATURE		
126 -	C72D47119-1	PANEL ASSY - PILOT INSTRUMENT (SEE FIG. 130)		REF
	41A-42214	.SELECTOR ASSY - UHF CHANNEL		1
- 1	C5063/ARC552	..CONTROL - FREQUENCY SELECTOR (V90095) FOR BRKDN SEE C-50-121-00//MZ-000		1
	41A-42215	..PLATE - ADAPTER		1
	MS24693-2	..SCREW		3
	MS35214-27	.SCREW		3
	AN960D8L	.WASHER		3
- 2	2002-354H	.INDICATOR - (V09959) (UHF COMMAND) (AS PER 28-50576-10)		1
	MS24693-24	.SCREW		2
- 3	MN97HA4/ARN	.INDICATOR - (V05257) (TACAN COURSE)		2
	S1445	.FIXTURE - (V88308) (LIGHTING)		2
	MS25237-327	.LAMP		2
	MS24693-33	.SCREW		2
	MS35214-31	.SCREW		2
	AN960D8L	.WASHER		4
	NAS487-15	.NUT		4
- 4	ID5040A/ARN	.INDICATOR - (V07213) (TACANDRM)		2
	20-0084-1C	.FIXTURE - (V72914)(LIGHTING)(TOP LH MTG HOLE)		2
	20-0084-2C	.FIXTURE - (V72914)(LIGHTING)(TOP RH MTG HOLE)		2
	MS25237-327	.LAMP		4
	MS24693-32	.SCREW		4
	MS35214-31	.SCREW		4
	AN960D8L	.WASHER		8
	NAS487-15	.NUT		8
- 5	MS24523-23	.SWITCH - (VOR/ILS - TACAN SELECTOR)		1
- 6	MS35058-22	.SWITCH - (TACAN COURSE SELECTOR)		1
- 7	MS25201-7	.SWITCH - (MARKER SENS)		1
- 8	MS25041-1	.LIGHT ASSY - (MKR/BCN INDICATOR AIRWAYS)		1
- 9	MS25041-10	.LIGHT ASSY - (MKR/BCN INDICATOR OUTER)		1
-10	MS25041-4	.LIGHT ASSY - (MKR/BCN INDICATOR MIDDLE)		1
	MS25237-328	.LAMP		3
R -11	522-4408-207	.PANEL - (V13499) (VOR/ILS CONTROL) (C5302/ARN508)		1
	41A-42200	ELECTRICAL EQUIP INSTL - COCKPIT (SEE FIG. 107)		REF
-12	NO NUMBER *	.HOLDER - FREQUENCY CARD	A	1
	NO NUMBER *	.CARD - UHF COMMUNICATION FREQUENCIES	A	2
	41A-52023	.ELECTRICAL EQUIP INSTL - LH CONSOLE (SEE FIG. 109)		REF
-13	S1338-2	..BOLT - (V88308)		12
	MS21042L3	..NUT		12
-14	9226-3887	..RELAY -(V35344)(UHF K3RU, K4RU, K5RU & K6RU)		4
-15	AN515-4R8	..SCREW		12
	MS35333-36	..LOCK WASHER		12
-16	S1331A2	..POST - (V88308)		2
-17	MS35206-243	..SCREW		2
	MS35335-31	..LOCK WASHER		2
-18	MS27212-1-8	..TERMINAL BLOCK ASSY - (TB112)		1
	S1307H1-8	..STRIP - (V88308)		1
	MS35206-215	..SCREW		2
	MS35338-40	..WASHER		2
	MS25227-1	..STRIP		1
	MS25227-2	..STRIP		1
	MS25226-2-3	..BUS		1
	MS25226-2-2	..BUS		2
	AN960-6	..WASHER		8
	MS21042L06	..NUT		8
-19	MS18029-1S8	..SHIELD		1
	*	IAW C-12-114-000/CF-400		
	A	FOR AIRCRAFT WITHOUT C-12-114-000/CD-033 EMBODIED		

FIGURE AND INDEX NUMBER	GROUP	ELECTRONIC EQUIPMENT	EFFEC-TIVITY	UNITS PER ASSY
	MAJOR ASSEMBLY	COCKPIT ELECTRONIC EQUIPMENT		
	PART NUMBER	1 2 3 4 5 6 7 NOMENCLATURE		
126 -	41A-52015	.ELECTRICAL EQUIP INSTL - CTR CONSOLE (MOD BY C-12-114-000/CF-373 & CD-030) (SEE FIG. 110)		REF
-20	C5287/ARN504V	..CONTROL - TACAN (TACAN) FOR BRKDN SEE C-57-364-000/MY-000		1
-21	C5140/AIC502	..CONTROL - (V81574) (INTERCOM DUAL) FOR BRKDN SEE C-50-224-000/MF-000		1
-22	C5067/ARC552	..CONTROL - (V13499) (UHF RADIO) FOR BRKDN SEE C-50-121-000/MZ-000		1
-23	C6280P/APX	..CONTROL - (V80249) (IFF/SIF) FOR BRKDN SEE C-59-107-000/MS-000		1
	41A-72030-802	..PANEL ASSY - UHF AUXILIARY CONTROL		1
	41A-72070	...PANEL & COVER ASSY		1
-24	41A-72070-2	....PANEL ASSY - MOUNTING		1
	PFSC3-1/2-38	....FASTENER - (V72794)		4
-25	41A-72070-4	....PLATE ASSY-TERMINAL		1
	41A-72070-14	....PLATE - INSULATING		1
	41A-72070-16	....PLATE - INSULATING		1
	MS24693-6	....SCREW		2
	AN960D4L	....WASHER		2
	MS21044N04	....NUT		2
-26	41A-72070-6	....COVER		1
	AN515-4R8	....SCREW		1
	AN960D4L	....WASHER		1
-27	41A-70510-2	...PANEL - EDGE LIGHTED PLASTIC		1
	AN515PB6R8	...SCREW		2
	S1426-6	...WASHER - (V88308)		2
-28	MS25010B12A	...LIGHT ASSY		2
	MS25237-327	...LAMP		2
-29	RV4NAYSD103A	...POTENTIOMETER - (V75042)	A	1
	41A-72070-28	...PLATE ASSY - LOCK		1
-30	FNA1836	...KNOB - (V28856)		1
-31	MS35058-22	...SWITCH - (UHF EMERGENCY)	A	1
	SS48140	...PLUG - BUTTON (IAW C-12-114-000/CF-507)		1
	SS48152K22	...PLUG - BUTTON (IAW C-12-114-000/CF-507)		1
-32	MS35059-23	...SWITCH - (BAIL OUT)		1
-33	NO NUMBER	...GUARD - SWITCH (IAW C-12-114-000/CF-241)		2
	MS35333-112	...LOCK WASHER		4
	MS25082-21	...NUT		4
	AN960D816L	...WASHER		AR
-34	RC20GF561K	...RESISTOR		1
-35	PT02E14-19P	...RECEPTACLE - (BAC)		1
	AN515-4R8	...SCREW		4
	AN960D4L	...WASHER		4
	MS21044N04	...NUT		4
-36	S1338-1	..BOLT - (V88308)		2
-37	9220-4249	..RELAY - (V35344) (K2SX IFFREMOTE I/P)		1
-38	AN515-4R8	..SCREW		2
	MS35333-36	..LOCK WASHER		2
	MS21042L3	..NUT		2
-39	S1338-7	..BOLT - (V88308)		6
-40	9226-3887	..RELAY - (V35344) (K1RN TACAN COURSE SEL & K2RU UHF MAIN EMERGENCY)		2
-41	AN515-4R8	..SCREW		6
	MS35333-36	..LOCK WASHER		6
	MS21042L3	..NUT		6
	41A-42216	.UHF UNIT INSTL - REMOTE CHANNELING		NP
-42	552-1932-003	..PLATE - (V90095)(MOUNTING)		1
R	MS35206-244	..SCREW		6
	A	FOR AIRCRAFT WITHOUT C-12-114-000/CF-507 EMBODIED		

	FIGURE AND INDEX NUMBER	GROUP	ELECTRONIC EQUIPMENT	EFFEC-TIVITY	UNITS PER ASSY
		MAJOR ASSEMBLY	COCKPIT ELECTRONIC EQUIPMENT		
		PART NUMBER	1 2 3 4 5 6 7 NOMENCLATURE		
	126 -43	C5069/ARC552	..CONTROL - (V90095) (UHF REMOTE CHANNEL UNIT) FOR BRKDN SEE C-50-121-000/MZ-000		1
	-44	MS3181-14	..CAP		1
	-45	PT00SE24-61S(SR)	.RECEPTACLE - (V07213) (J3SXIFF/SIF)		1
		10-150949-24	.GASKET - (V07213)		1
	-46	SPB24-61PS003	.RECEPTACLE - (V07213) (J22 TACAN - COMPASS)		1
		10-150949-24	.GASKET - (V07213)		1
	-47	SPB16-23PS003	.RECEPTACLE - (V07213) (J2RUUHF)		1
		10-150949-16	.GASKET - (V07213)		1
	-48	SPB20-41PS003	.RECEPTACLE - (V07213) (J1RUUHF)		1
		10-150949-20	.GASKET - (V07213)		1
R		MS35206-230	.SCREW		16
		AN960D6L	.WASHER		16
		MS21042L06	.NUT		16
	-49	SO1004	SOCKET - RELAY (SEE FIG. 128)		REF
	-50	SO1000	SOCKET - RELAY (SEE FIG. 128)		REF
R	-51	622-6813-001 ***	CONTROL UNIT - (DF-206A) (REF FIGURE 128A)		REF
		41A-58044-2 *	DUAL STATIC INVERTER AND UHF SYSTEM INSTL - (SEE SECTION 12)		REF
	-52	C-5367(V)2/ARC-164(V) *	.CONTROL - ARC164 UHF (E2RU) (80058)		1
		41A-30030-2 *	.BALLAST - (USED ON VHF XCVR)		1
		K41A-58043-8 *	.SPACER		2
		MS35207-268 *	.SCREW		4
		AN960D10L *	.WASHER		4
		MS21042L3 *	.LOCKNUT		3
		MS25036-102 *	.LUG - TERMINAL		9
		MS25036-103 *	.LUG - TERMINAL		4
		MS25036-107 *	.LUG - TERMINAL		2
		MS25036-108 *	.LUG - TERMINAL		2
		K41A-58041-2 **	INTERCOM SYSTEM INSTL - (SEE FIG. 124)		NP
	-53	5071-1-1/AIC504 **	SELECTOR INTERCOM - (E1RZ) (30242)		1
		MS3476L20-41S **	CONNECTOR - (P3RZ)		1
		M85049/53-20W **	STRAIN RELIEF - (81349)		1
		JAN1N3957 **	DIODE - (CR2SX AND CR3SX)		2
			-OOO-		
		*	IAW C-12-114-000/CF-459 OR /CF-461		
		**	IAW C-12-114-000/CF-462		
R		***	IAW C-12-114-000/CD-033		

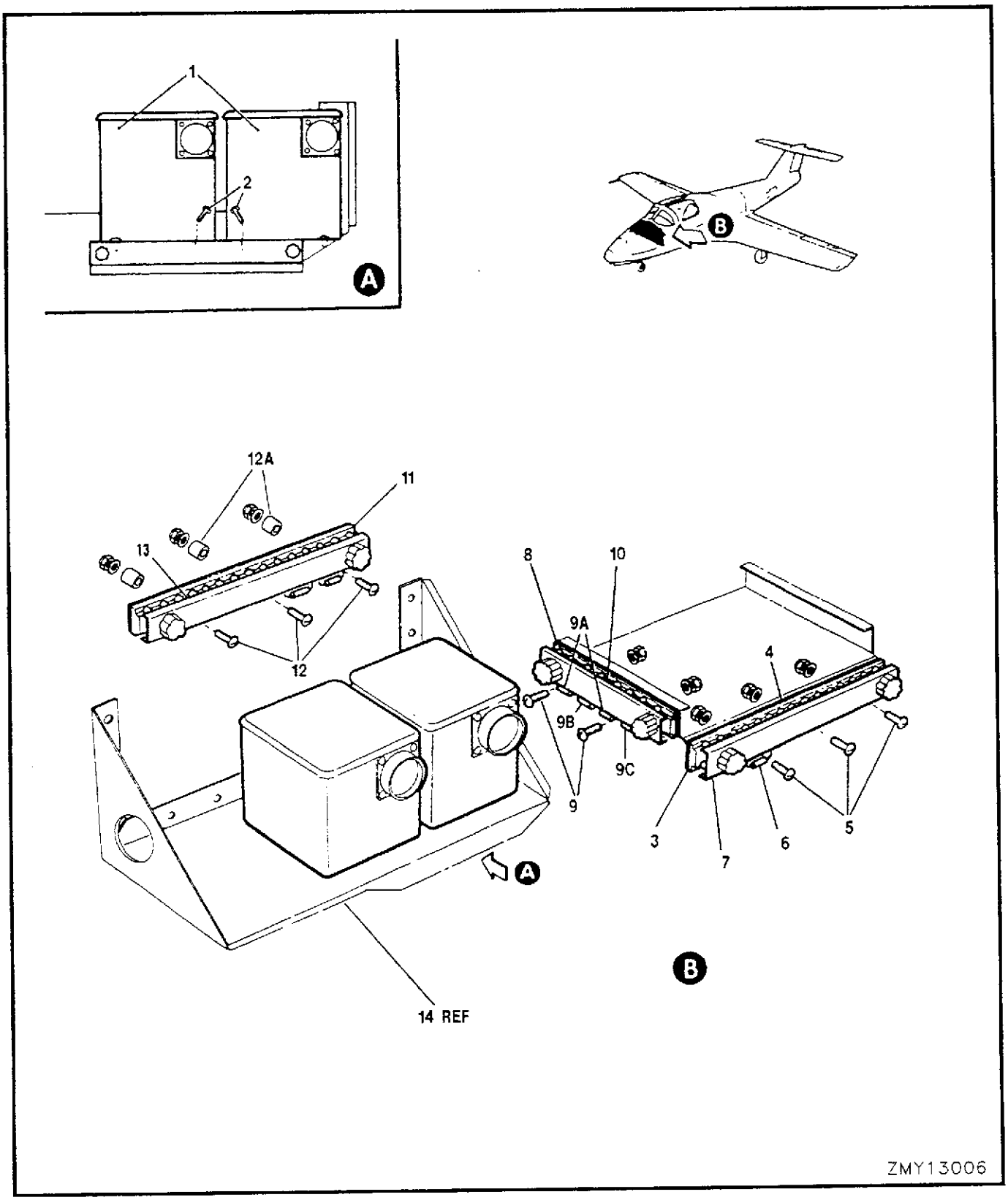

FIGURE 127 FUSELAGE STA 149 BULKHEAD ELECTRONIC

	FIGURE AND INDEX NUMBER	GROUP	ELECTRONIC EQUIPMENT	EFFEC-TIVITY	UNITS PER ASSY
		MAJOR ASSEMBLY	FUSELAGE STA 149 BULKHEAD ELECTRONIC		
		PART NUMBER	1 2 3 4 5 6 7 NOMENCLATURE		
	127 -	41A-42203	ELECTRICAL & ELECTRONIC EQUIP INSTL FUS STA 149 BULKHEAD(SEE SECTION 12)		REF
	- 1	AM5186/AIC502	.AMPLIFIER UNIT - M150 (V81574)		2
R	- 2	MS35206-245	.SCREW		8
		AN960PD8L	.WASHER		8
		SL201-5AA11	.CLIPNUT - (V97393)		8
	- 3	MS27212-1-15	.TERMINAL BLOCK ASSY - (TB106)		1
	- 4	S1307H1-15	.STRIP - (V88308)		1
R	- 5	MS35206-215	.SCREW		3
		AN960D4L	.WASHER		3
		MS21042L04	.NUT		3
		MS25227-2	.STRIP		1
		MS25227-1	.STRIP		2
	- 6	RC20GF102K	.RESISTOR - (V75042) (ON POST 2 & 3)		1
		AN960-6	.WASHER		15
		MS21042L06	.NUT		15
	- 7	MS18029-1S15	.SHIELD		1
	- 8	MS27212-1-8	.TERMINAL BLOCK ASSY - (TB110)		1
		S1307H1-8	.STRIP - (V88308)		1
R	- 9	MS35206-216	.SCREW		2
		AN960D4L	.WASHER		2
		MS21042L04	.NUT		2
		MS25227-1	.STRIP		2
	- 9A	RC32GF683K	.RESISTOR - (V75042) (ON POST 1-2 & 4-5)		2
	- 9B	RC32GF151K	.RESISTOR - (V75042) (ON POST 3-4)		1
	- 9C	RC20BF103K	.RESISTOR - (V75042) (10000 OHM 1/2W) (ON POST 4 & 8)		1
		AN960-6	.WASHER		8
		MS21042L06	.NUT		8
	-10	MS18029-1S8	.SHIELD		1
	-11	MS27212-1-15	.TERMINAL BLOCK ASSY - (TB107) TACAN & UHF)		1
		S1307H1-15	.STRIP - (V88308)		1
R	-12	MS35206-223	.SCREW		3
	-12A	NAS43DD1-64	.SPACER		3
		AN960D4L	.WASHER		3
		MS21042L04	.NUT		3
		MS25227-1	.STRIP		2
		MS25227-2	.STRIP		1
		MS25226-2-2	.BUS - (ON POST 1-2 & 6-7)		2
		RC32GF680K	.RESISTOR - (V75042) (ON POST 10-11)		1
		RC32GF221K	.RESISTOR - (V75042) (ON POST 13-14)		1
		AN960-6	.WASHER		15
		MS21042L06	.NUT		15
	-13	MS18029-1S15	.SHIELD		1
	-14	41A-42205-16	BRACKET ASSY - SUPPORT (SEE SECTION 12)		REF

-OOO-

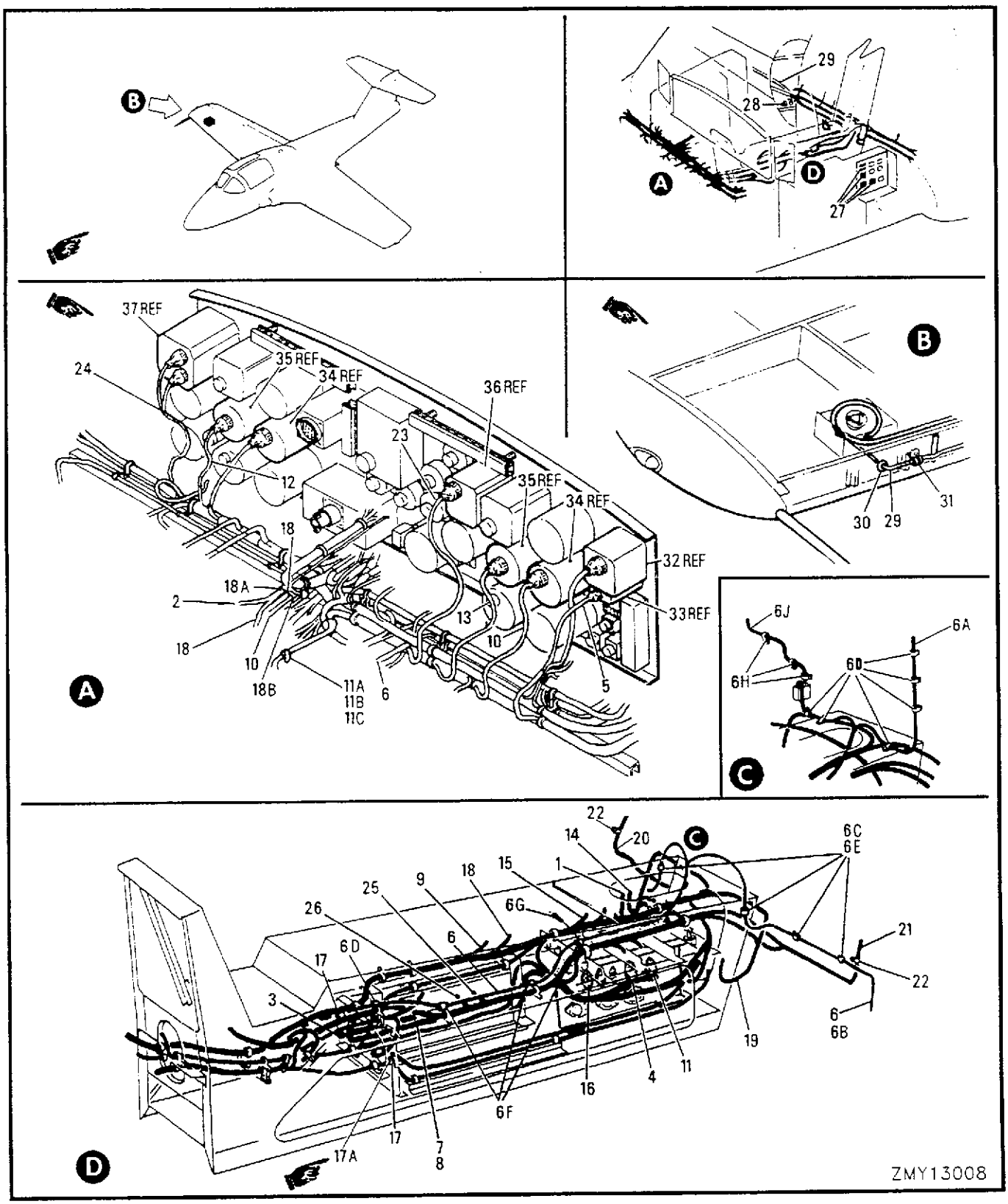

FIGURE 128 COCKPIT ELECTRONIC HARNESSES

FIGURE AND INDEX NUMBER	GROUP	ELECTRONIC EQUIPMENT	EFFEC-TIVITY	UNITS PER ASSY
	MAJOR ASSEMBLY	COCKPIT ELECTRONIC HARNESSES		
	PART NUMBER	1 2 3 4 5 6 7 NOMENCLATURE		
128 -	41A-43003	HARNESS INSTL - COCKPIT ELECTRICAL (MOD BY C-12-114-000/ CD-030) (SEE SECTION 12)		REF
- 1	41A-70242-800	.HARNESS ASSY - UHF CIRCUIT BREAKER PANEL		1
- 2	41A-70246-800	.HARNESS ASSY - UHF FUS STA 149 TO COCKPIT		1
	PT06SE16-23S	..PLUG - (BAC) (FUS STA 149 BULKHEAD DISC)		1
- 3	1N249B	..RECTIFIER - SILICONE		1
- 4	SO1004	..SOCKET - (V35344) (UHF MAIN EMERGENCY RELAY)		1
	PT06SE14-19S	..PLUG - (BAC) (AUXILIARY CTL PANEL)		1
- 5	41A-70248	.HARNESS ASSY - UHF COMMAND INDICATOR		1
	MS3106R10SL3S	..PLUG - (COMMAND INDICATOR DISCONNECT)		1
- 6	41A-70260	.HARNESS ASSY - INTERCOMMUNICATION CONTROL PANEL TO COCKPIT AREA	001-175	1
- 6A	41A-70260-800	.HARNESS ASSY - INTERCOMMUNICATION CONTROL PANEL TO COCKPIT AREA	176-	1
	K03-21-30SN-C13F	..PLUG - (CED) (DUAL CONTROL PANEL & AMPL)		3
	K06-21-5/8	..ENDBELL - (CED)		3
R		DELETED		
R	MS3100R14S5S	..RECEPTACLE		1
R		DELETED		
R		DELETED		
	MS3057-6A	..CLAMP	176-	1
- 6B	1/4	.POLY SPIRAP - (V09482)		2
- 6C	MS21919WDG4	.CLAMP	001-175	4
- 6D	MS21919WDG4	.CLAMP	176-	6
- 6E	MS35206-245	.SCREW	001-175	2
	MS35206-245	.SCREW	176-	4
	AN960D8L	.WASHER	001-175	2
	AN960D8L	.WASHER	176-	4
	MS21042L08	.NUT	001-175	2
	MS21042L08	.NUT	176-	4
- 6F	MS21919WDG8	.CLAMP		4
- 6G	MS35206-245	.SCREW		1
	AN960D8L	.WASHER		1
	MS21042L08	.NUT		1
- 6H	41A-70265	.HARNESS ASSY - TB113 TO SEAT DISCONNECT	176-	1
R	MS3100R14S5S	..RECEPTACLE		1
R		DELETED		
R		DELETED		
- 6J	MS21919WDG4	.CLAMP	176-	3
	NAS43DD3-16	.SPACER	176-	1
	MS35206-245	.SCREW	176-	1
	AN960D8L	.WASHER	176-	1
	MS21042L08	.NUT	176-	1
- 7	41A-70262	.HARNESS ASSY - INTERCOMMUNICATION PUSH TO TALK SWITCH (RH)		1
- 8	41A-70264-802	.HARNESS ASSY - INTERCOMMUTING SWITCH WIRING (RH CON-SOLE)		1
- 9	41A-70271	.HARNESS ASSY - TACAN FUS STA 149 TO COCKPIT AREA	001-010	1
	41A-70271-800	.HARNESS ASSY - TACAN FUS STA 149 TO COCKPIT AREA	011-	1
	PT06SE24-61S	..PLUG - (BAC) (FUS STA 149 DISCONN)		1
	WP20SM	..CONNECTOR - (V81312) (RADIO SET CONTROL)		1
-10	41A-70272-802	.HARNESS ASSY - TACAN COURSE IND WIRING		1
	MS3106R28-12S	..PLUG - (INDICATOR DISCONNECT)		2
-11	SO1004	..SOCKET - (V35344) (COURSE SELECTION RELAY)		1
-11A	MS21919WDG10	.CLAMP		1
-11B	MS35206-248	.SCREW		1
-11C	NAS43DD3-24	.SPACER		1
	AN960D8L	.WASHER		1
	MS21042L08	.NUT		1
-12	41A-70273-800	.HARNESS ASSY - INSTRUCTORS DRMI WIRING		1
	PT06SE18-32S	..PLUG - (BAC) (INSTRUCTORS DRMI DISC)		1

FIGURE AND INDEX NUMBER	GROUP	ELECTRONIC EQUIPMENT	EFFEC-TIVITY	UNITS PER ASSY
	MAJOR ASSEMBLY	COCKPIT ELECTRONIC HARNESSES		
	PART NUMBER	1 2 3 4 5 6 7 NOMENCLATURE		
128 -13	41A-70274-800	.HARNES ASSY - STUDENTS DRMI WIRING		1
	PT06SE18-32S	..PLUG - (BAC) (STUDENTS DRMI DISC)		1
-14	41A-70275	.HARNESS ASSY - TACAN CIRCUIT BREAKER PANEL		1
-15	41A-70281	.HARNESS ASSY - IFF/SIF REMOTE I/P RELAY		1
-16	SO1000	..SOCKET - (V35344) (REMOTE I/P RELAY)		1
-17	1N249B	..RECTIFIER - SILICONE		2
-17A	1N1348A	.DIODE - (CR6KB)		1
-18	C74D47080-1	.HARNESS ASSY - IFF/SIF FUS STA 149 TO TRANSPONDER SET CONTROL)		1
	PT00SE24-61S(SR)	..RECEPTACLE - (V77820) (J1SX BULKHEAD DISC)		1
	10-101949-24	.GASKET - (V77820)		1
	MS24693C36	.SCREW		4
	AN960-6L	.WASHER		4
	MS21042L06	.NUT		4
	MS24266R22B55SN	.PLUG - (P1SX TRANSPONDER SET CONTROL DISC)		1
	MS27291-6	.CLAMP		1
-18A	MS21919WDG8	.CLAMP		1
-18B	MS21919WDG10	.CLAMP		1
R -18C	MS35206-245	.SCREW		1
	AN960D8L	.WASHER		1
	MS21042L08	.NUT		1
-19	41A-70283	.HARNESS ASSY - IFF/SIF CB PANEL		1
	67-06E18-24S	..CONNECTOR - (V09482) (TRANSPONDER SET CTL)		1
-20	41A-70286-800	.HARNESS ASSY - IFF/SIF RH SEAT EJN SWITCH		1
	67-06E18-24S	..CONNECTOR - (V09482) (TRANSPONDER SET CTL)		1
-21	41A-70287-800	.HARNESS ASSY - IFF/SIF LH SEAT EJN SWITCH		1
R -22	MS21919WDG4	.CLAMP		2
	MS35206-245	.SCREW		2
	AN960D8L	.WASHER		2
	MS21042L08	.NUT		2
-23	C72C47116-1 *	.HARNESS ASSY - (PILOTS SERVOED ALTIMETER INDICATOR P6A WIRING)		1
	MS2466R16T24S *	..PLUG - (P6A DISCONNECT)		1
-24	C72C47117-1 *	.HARNESS ASSY - (J1A TEST RCPT WIRING) (SEE FIG. 129)		REF
	C72B47110-1 *	..LEAD		1
	MS3126F14-15S *	..PLUG - (COPILOTS COMPUTER ALTITUDE IND P4A DISCONNECT)		1
	C72B47110-1 *	..LEAD		1
	MS3126F14-12S *	..PLUG - (COPILOTS COMPUTER ALTITUDE IND P4B DISCONNECT)		1
-25	41A-70346-800	.HARNESS ASSY - UHF SYS MAIN CONTROL		1
	PT06SE20-41P	..PLUG - (BAC) (MAIN CONTROL P10RU)		1
	PT06SE12-10S	..PLUG - (BAC) (ROTARY CHANNEL SEL P14RU)		1
	PT06E18-30S	..PLUG - (BAC) (REMOTE CHAN UNIT PMRU)		1
-26	41A-70347-800	.HARNESS ASSY - UHF SYS FUS STA 149 TO COCKPIT AREA		1
	PT06SE20-41S	..PLUG - (BAC) (FUS STA 149 DISCONN & MAIN CONTROL CENTRE CONSOLE)		2
-27	SO1004	..SOCKET - (V35344) (K3RU, K4RU, K5RU & K6RU RELAY)		4
	41A-42101	ELECTRICAL & ELECTRONIC EQUIP INSTL - CENTRE FUSELAGE (SEE SECTION 12)		REF
-28	UG492D/U	.ADAPTER - (V02660) (IFF TEST)		1
	41A-43000-1	HARNESS INSTL - STBD WING (SEE SECTION 12)		REF
-29	41A-70381	.LINE ASSY - IFF/SIF ANTENNA TEST XMSN (ANTENNA TO WING ROOT)		1
	UG88D/U	..PLUG - (P102SX & P104SX)		2
	KS89-05	..K-GRIP		2
-30	MS35489-5	.GROMMET		1
-31	MS21919WDG3	.CLAMP		19
	S4905-00116	.EDGING - (V88308) (PLASTIC EXTRUSION)		1
	*	IAW C-12-114-000/CF-357		

FIGURE AND INDEX NUMBER	GROUP	ELECTRONIC EQUIPMENT	EFFEC-TIVITY	UNITS PER ASSY
	MAJOR ASSEMBLY	COCKPIT ELECTRONIC HARNESSES		
	PART NUMBER	1 2 3 4 5 6 7 NOMENCLATURE		
128 -32	41A-42214	SELECTOR ASSY - UHF CHANNEL (SEE FIG. 126)		REF
-33	2002-354H	INDICATOR - (UHF COMMAND) (SEE FIG. 126)		REF
-34	MN97HA4/ARN	INDICATOR - (V05257) (TACAN COURSE) (SEE FIG. 126)		REF
-35	ID5040A/ARN	INDICATOR - (V07213) (TACAN DRM) (SEE FIG. 126)		REF
-36	81-22-20	INDICATOR - SERVOED ALTIMETER (SEE FIG. 130)		REF
-37	31236-10T-C11	INDICATOR - ALTITUDE COMPUTER (SEE FIG. 130)		REF
		-OOO-		

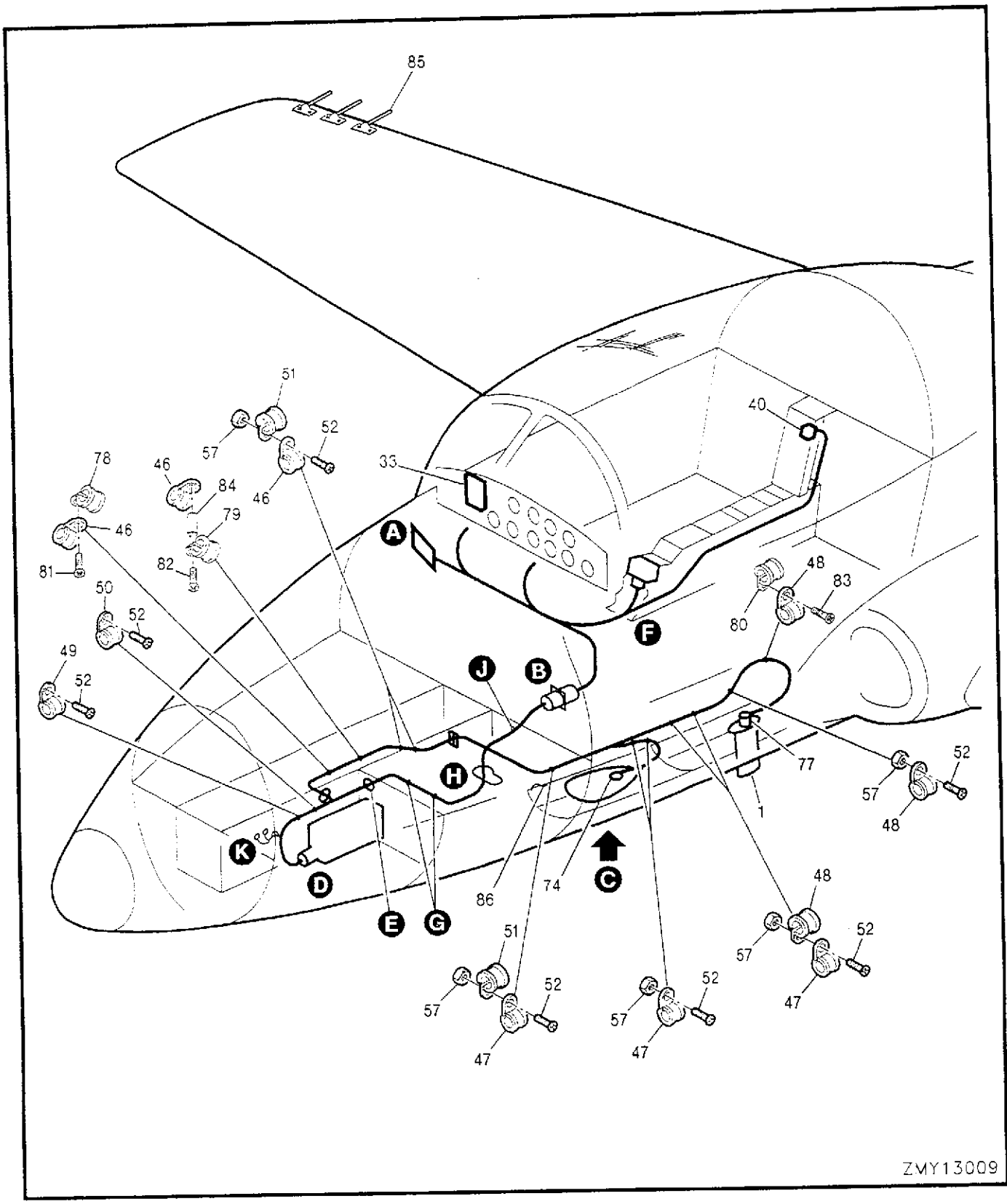

FIGURE 128A (Sheet 1 of 3) Direction Finding System DF-206A

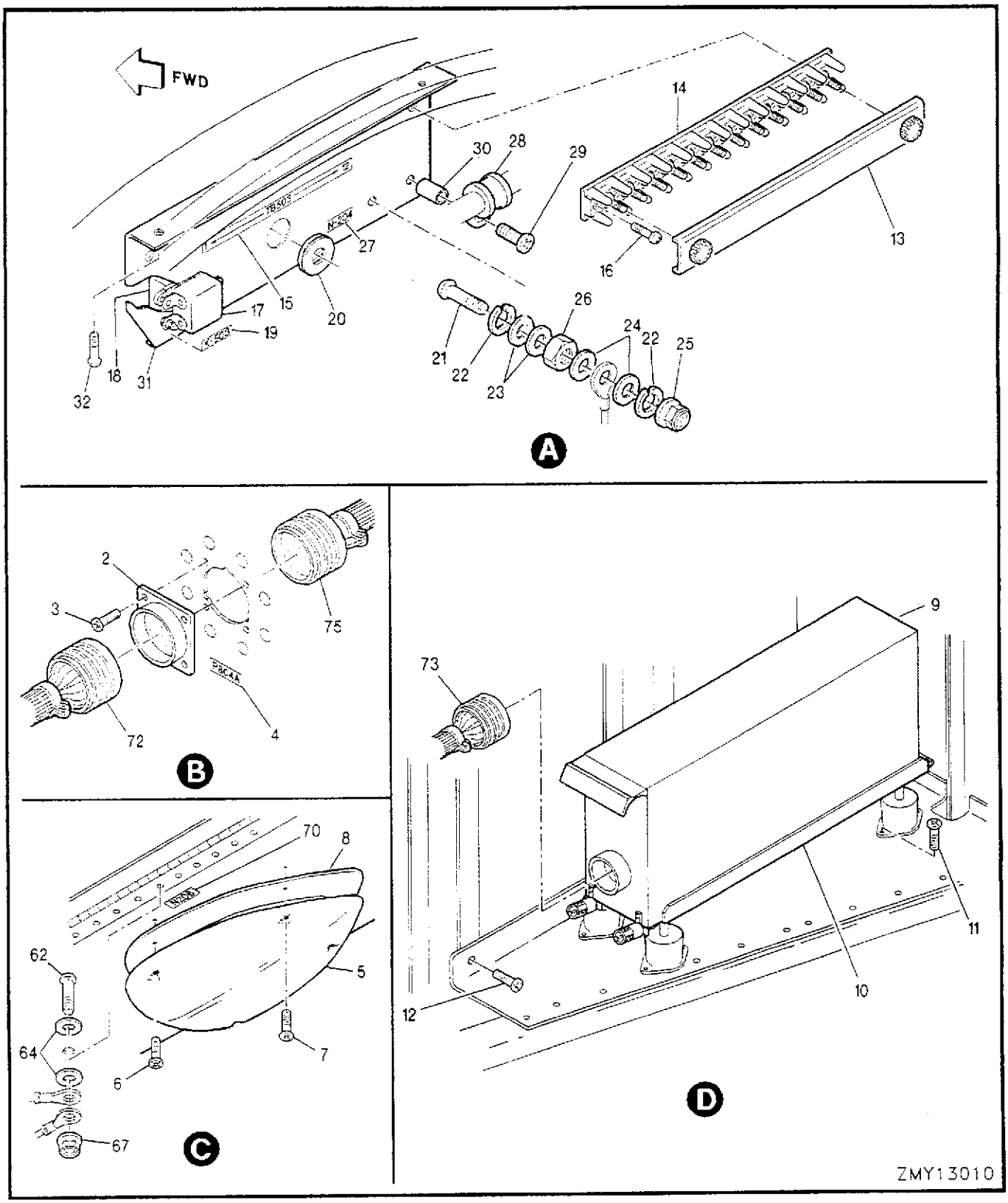

FIGURE 128A (Sheet 2 of 3) Direction Finding System DF-206A

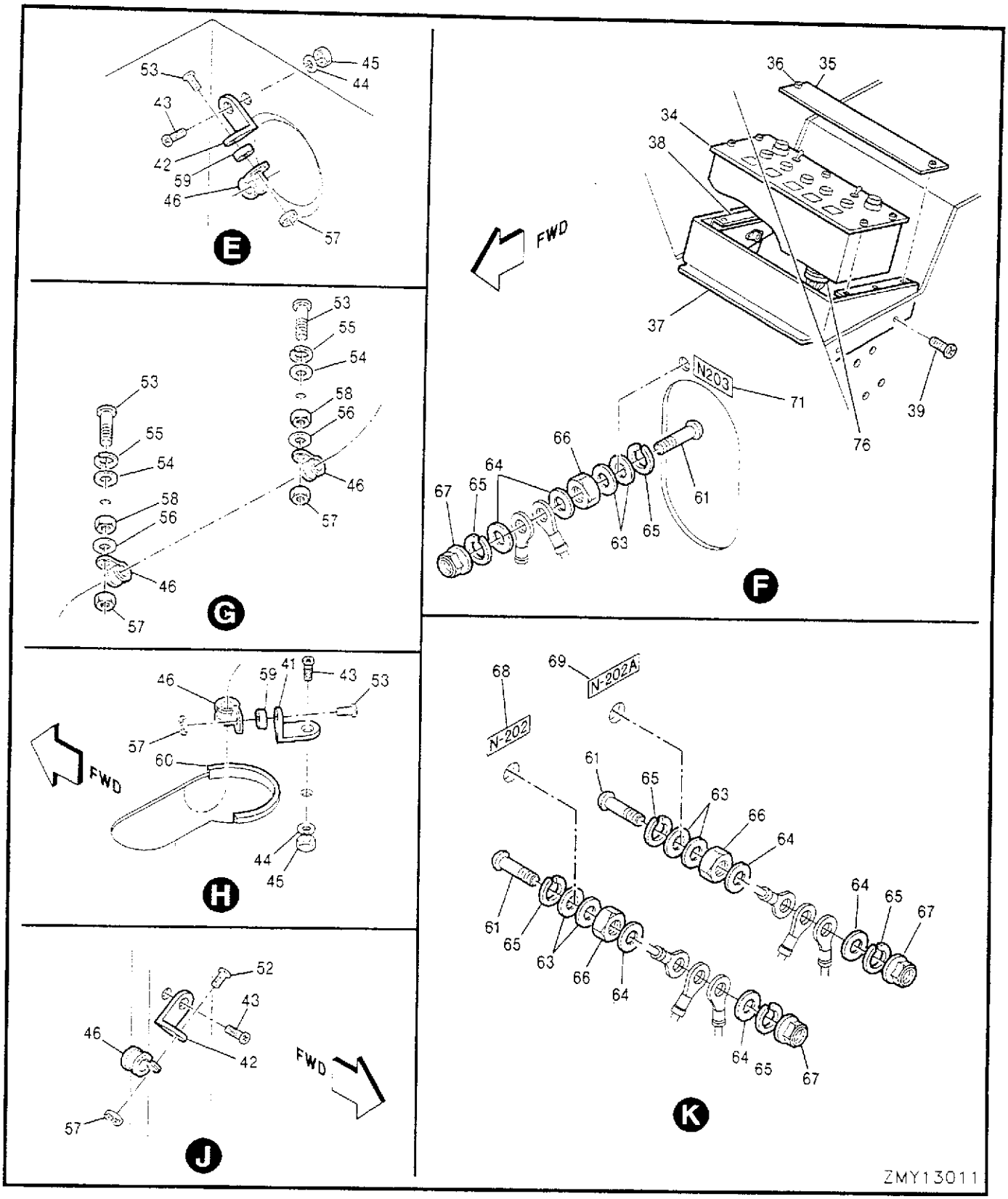

FIGURE 128A (Sheet 3 of 3) Direction Finding System DF-206A

	FIGURE AND INDEX NUMBER	GROUP	AUTOMATIC DIRECTION FINDING SYSTEM – DF-206A	EFFEC-TIVITY	UNITS PER ASSY
		MAJOR ASSEMBLY	COCKPIT ELECTRONIC HARNESSES		
		PART NUMBER	1 2 3 4 5 6 7 NOMENCLATURE		
R	128A	NW4601101-1	AUTOMATIC DIRECTION FINDING SYSTEM - DF-206A		NP
R	- 1	NW4601102-1	.ANTENNA RELOCATION - UHF (SEE FIG. 123)		1
R		NW4601103-1	.CONNECTOR INSTL - BULKHEAD		1
R	- 2	MS3119E16-26	..CONNECTOR		1
R	- 3	MS35206-216	..SCREW		4
R		AN960-4	..WASHER		4
R		MS21042-04	..NUT		4
R	- 4	NW4601147-6	..LABEL (P804A)		2
R		NW4601104-1	.ANTENNA INSTL - ADF		1
R	- 5	622-6820-001	..ANTENNA - ADF		1
R	- 6	MS35207-269	..SCREW		2
R	- 7	MS35207-270	..SCREW		2
R		MS21059L3	..NUT		4
R	- 8	623-9614-001	..GASKET		1
R		NW4601105-1	.RECEIVER INSTL - ADF (SEE FIG. 105)		1
R	- 9	622-6812-003	..RECEIVER - ADF (V95105)		1
R	-10	622-7210-002	..BASE - ADF MOUNTING (V95105)		1
R	-11	MS35206-245	..SCREW		8
R	-12	MS35206-261	..SCREW		1
R		AN960C10L	..WASHER		1
R		NW4601106-1	.BRACKET INSTL - RELAY		1
R	-13	MS18029-1S12	..COVER - TERMINAL BLOCK		1
R	-14	MS27212-1-12	..TERMINAL BLOCK (TB503)		1
R	-15	NW4601124-1	..LABEL (TB503)		1
R	-16	MS35206-217	..SCREW		2
R		AN960-4	..WASHER		2
R		MS21042-04	..NUT		2
R	-17	Y-D4N	..RELAY - (V35344) (K503)		1
R	-18	S0-1066-001	..SOCKET - RELAY (V35344)		1
R	-19	NW4601125-1	..LABEL (K503)		1
R	-20	MS35489-9	..GROMMET		1
R	-21	MS35207-265	..SCREW		1
R	-22	MS35338-43	..WASHER - LOCK		2
R	-23	AN960D10	..WASHER		2
R	-24	AN960-10L	..WASHER		2
R	-25	MS21042-3	..NUT		1
R	-26	MS35650-302	..NUT		1
R	-27	NW4601147-4	..LABEL (N204)		1
R	-28	MS21919WDG8	..CLAMP		1
R	-29	MS35207-267	..SCREW		1
R		AN960-10	..WASHER		1
R		MS35338-10	..WASHER		1
R		MS21043-3	..NUT		1
R	-30	LS607-8	..SPACER (V36659)		1
R	-31	NW4601123-1	..BRACKET - RELAY		1
R	-32	MS35206-243	..SCREW		2
R		AN960-8	..WASHER		2
R		MS21042-08	..NUT		2
R	-33	NW4601107-1	.PANEL MODIFICATION - VOR (SEE FIG. 130)		1
R		NW4601108-1	.CONTROLLER INSTL - ADF		1
R	-34	622-6813-001	..CONTROLLER - ADF (V95105)		1
R	-35	NW4601139-1	..PLATE ASSY		1
R	-36	PFSC3-1-2-38A	...STUD (V72794)		2
R	-37	NW4601126-1	..BRACKET ASSY		1
R	-38	PR3-1-2	...ANGLE - MOUNTING (V72794)		2
R	-39	MS35207-243	..SCREW		4
R	-40	NW4601109-1	.CIRCUIT BREAKERS INSTL - ADF (SEE FIG. 112)		1
R		NW4601145-1	.WIRING INSTL - ADF		1
R	-41	AN743-12	..BRACKET		1

	FIGURE AND INDEX NUMBER	GROUP	AUTOMATIC DIRECTION FINDING SYSTEM – DF-206A	EFFEC-TIVITY	UNITS PER ASSY
		MAJOR ASSEMBLY	COCKPIT ELECTRONIC HARNESSES		
		PART NUMBER	1 2 3 4 5 6 7 NOMENCLATURE		
R	128A -42	AN743-13	..BRACKET		2
R	-43	MS35207-263	..SCREW		3
R	-44	AN960D10	..WASHER		2
R	-45	MS21044N3	..NUT		2
R	-46	MS21919WDG5	..CLAMP		9
R	-47	MS21919WDG6	..CLAMP		5
R	-48	MS21919WDG7	..CLAMP		4
R	-49	MS21919WDG8	..CLAMP		1
R	-50	MS21919WDG9	..CLAMP		1
R	-51	MS21919WDG10	..CLAMP		3
R	-52	MS35207-263	..SCREW		11
R	-53	MS35207-265	..SCREW		4
R	-54	AN960D10L	..WASHER		2
R	-55	MS35338-43	..WASHER		2
R	-56	AN960D10	..WASHER		2
R	-57	MS21044N3	..NUT		13
R	-58	MS35650-302	..NUT		2
R	-59	LS607-8	..SPACER (V36659)		2
R	-60	MS21266-2	..GROMMET		AR
R		PLT1M-M	..STRAP (V06383)		AR
R		PLT2M-M	..STRAP (V06383)		AR
R	-61	MS35207-266	..SCREW		3
R	-62	MS35207-265	..SCREW		1
R	-63	AN960-10L	..WASHER		6
R	-64	AN960D10	..WASHER		8
R	-65	MS35338-43	..WASHER		6
R	-66	MS35650-302	..NUT		3
R	-67	MS21042-3	..NUT		4
R	-68	NW4601147-2	..LABEL (N202)		1
R	-69	NW4601147-3	..LABEL (N202A)		1
R	-70	NW4601147-5	..LABEL (N206)		1
R	-71	NW4601147-10	..LABEL (N203)		1
R		NW4601112-1	..CABLE ASSY		1
R	-72	MS3476L16-26P	...CONNECTOR (P802A)		1
R	-73	MS3476L22-55S	...CONNECTOR (P800A)		1
R		M85049/52-16N	...BACKSHELL		1
R		M85049/52-22N	...BACKSHELL		1
R		NW4601113-1	..LEAD ASSY		1
R	-74	MS34076L12-10S	...CONNECTOR (P801A)		1
R		M85049/52-12N	...BACKSHELL		1
R		NW4601114-1	..CABLE ASSY		1
R	-75	MS3476L16-26S	...CONNECTOR (P803A)		1
R		M85049/52-16N	...BACKSHELL		1
R		NW4601115-1	..LEAD ASSY		1
R	-76	MS24308/2-3	...CONNECTOR (P805A)		1
R		M85049/48-3-3N	...STRAIN RELIEF		1
R		DB51221-1	...RETAINER - ELEC CONN (V71468)		1
R		NW4601146-1	..CABLE ASSY		1
R	-77	M39012/01-0005	...CONNECTOR (P102RU & P112RU)		2
R		M55339/03-00027	...BACKSHELL		2
R	-78	MS21919WDG4	..CLAMP (SEE FIG. 106)		REF
R	-79	MS21919WDG7	..CLAMP (SEE FIG. 106)		REF
R	-80	MS21919WDG7	..CLAMP (SEE FIG. 125)		REF
R	-81	MS35206-245	..SCREW (SEE FIG. 106)		REF
R	-82	MS35206-332	..SCREW (SEE FIG. 106)		REF
R	-83	MS35206-245	..SCREW (SEE FIG. 125)		REF

	FIGURE AND INDEX NUMBER	GROUP	AUTOMATIC DIRECTION FINDING SYSTEM – DF-206A	EFFEC-TIVITY	UNITS PER ASSY
		MAJOR ASSEMBLY	COCKPIT ELECTRONIC HARNESSES		
		PART NUMBER	1 2 3 4 5 6 7 NOMENCLATURE		
R	128A -84	NAS43DD3-24	..SPACER (SEE FIG. 106)		REF
R	-85	NW4602000-1	STATIC DISCHARGERS INSTL (SEE FIG. 9, 12, 13 & 14)		1
R	-86	NW4602003-1	JUMPERS INSTL - BONDING (SEE FIG. 17, 18, 32 & 115)		1

SECTION 14

INSTRUMENT EQUIPMENT

TABLE OF CONTENTS

FIGURE	TITLE	PAGE
129 (1 of 2)	COCKPIT INSTRUMENT EQUIPMENT	14-02
129 (2 of 2)	COCKPIT INSTRUMENT EQUIPMENT	14-02B
130	INSTRUMENT PANEL	14-05
130A	FORWARD FUSELAGE INSTRUMENT EQUIPMENT	14-12
130B	CENTRE FUSELAGE INSTRUMENT EQUIPMENT	14-14

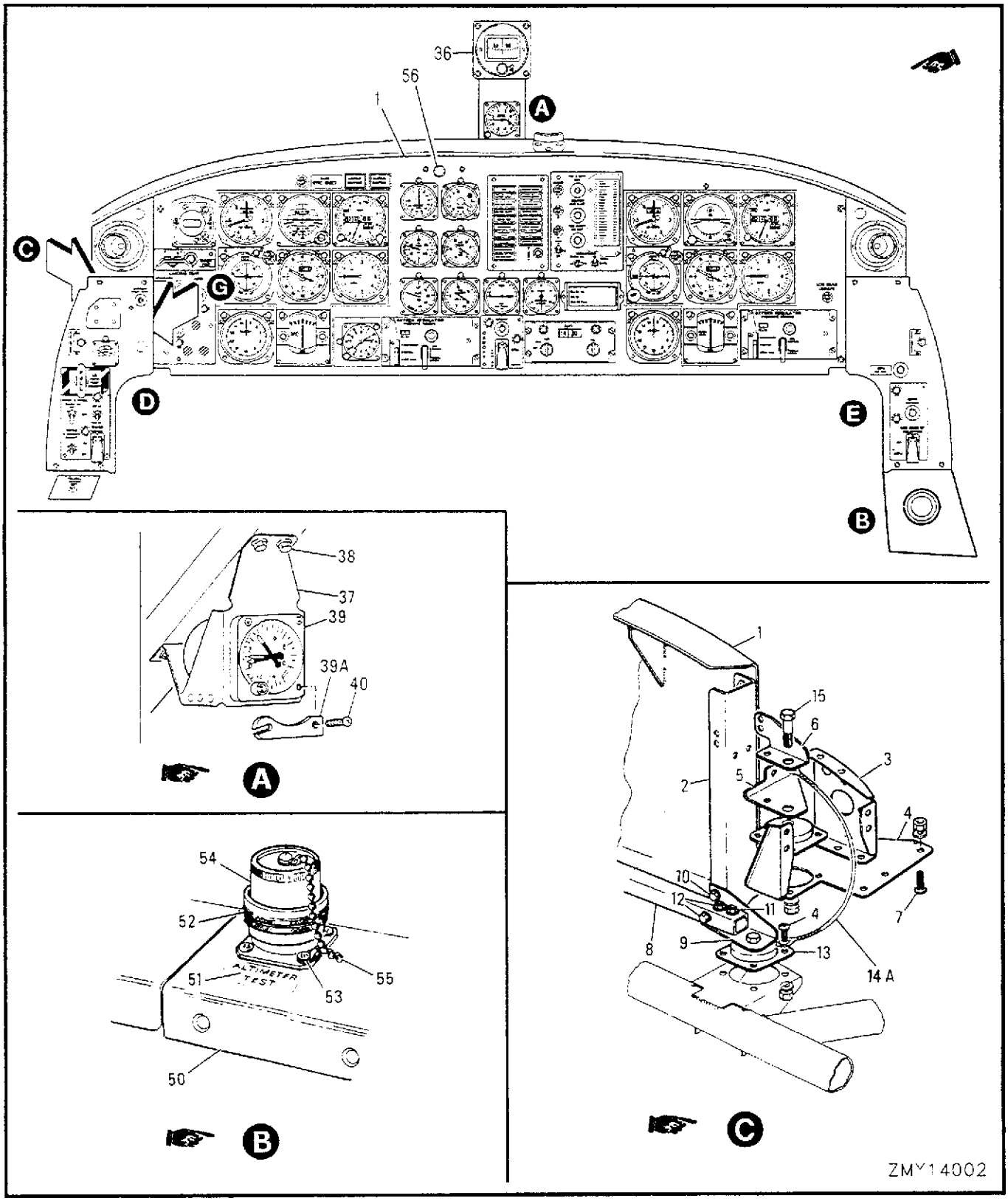

FIGURE 129 (Sheet 1 of 2) COCKPIT INSTRUMENT EQUIPMENT

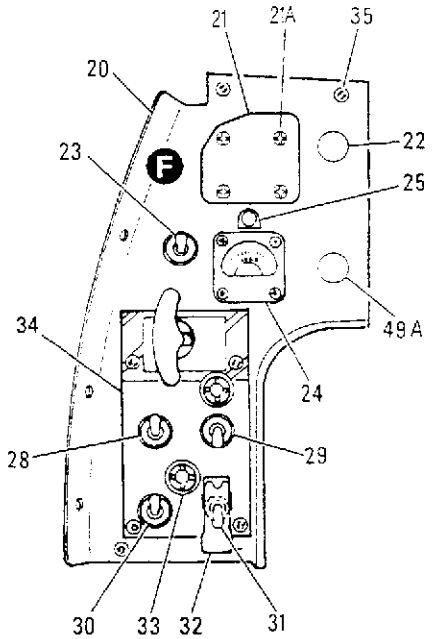

D

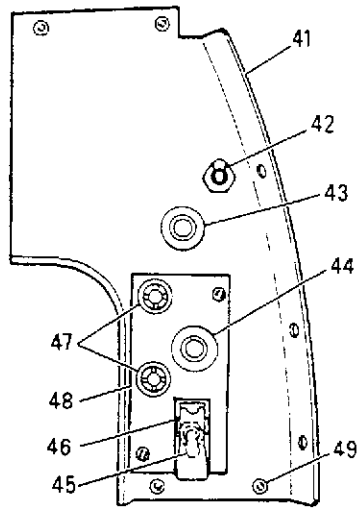

E

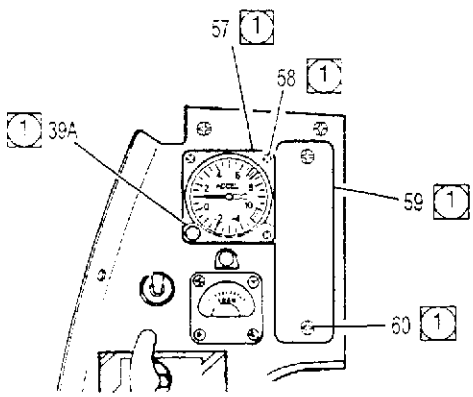

F

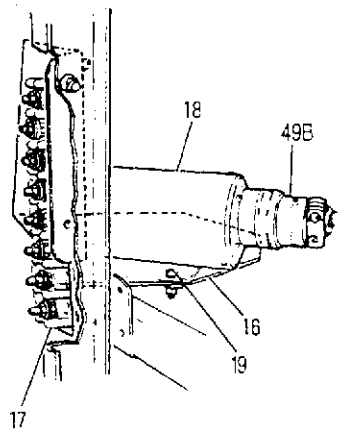

G

EFFECTIVITY

1 For aircraft with C-12-114-000/CF-526 embodied.

ZMY14005

Figure 129 (Sheet 2 of 2) COCKPIT INSTRUMENT EQUIPMENT

FIGURE AND INDEX NUMBER	GROUP: INSTRUMENT EQUIPMENT MAJOR ASSEMBLY: COCKPIT INSTRUMENT EQUIPMENT PART NUMBER	1 2 3 4 5 6 7 NOMENCLATURE	EFFECTIVITY	UNITS PER ASSY
129 -	41A-42200	COCKPIT EQUIPMENT INSTL - (SEE SECTION 12)		REF
	41A-52003	.PANEL INSTL - INSTRUMENT		NP
- 1	C72D47119-1	..PANEL ASSY - INSTRUMENT (MODIFIED) (SEE FIG. 130)		REF
- 2	41A-52003-4	..CHANNEL ASSY - PANEL LH		1
	41A-52003-5	..CHANNEL ASSY - PANEL RH		1
- 3	41A-52003-28	..BRACKET - UPPER LH		1
	41A-52003-29	..BRACKET - UPPER RH		1
- 4	41A-52003-86	..BRACKET - UPPER LH		1
	41A-52003-23	..BRACKET - UPPER RH		1
- 5	41A-52003-26	..ANGLE - UPPER LH		1
	41A-52003-27	..ANGLE - UPPER RH		1
- 6	41A-52003-24	..BRACKET - UPPER LH		1
	41A-52003-25	..BRACKET - UPPER RH		1
R - 7	MS35206-244	..SCREW		1
	AN960D8L	..WASHER		6
	MS21042L08	..NUT		6
- 8	41A-52003-32	..TUBE - LOWER		6
- 9	41A-52003-30	..ANGLE - LH		1
- 9	41A-52003-31	..ANGLE - RH		1
-10	AN3-5A	..BOLT		1
	AN960D10	..WASHER		2
	MS21042L3	..NUT		2
-11	MS24694-59	..SCREW		2
	NAS43-3-40	..SPACER		2
	AN960D10	..WASHER		2
	MS21042L3	..NUT		2
-12	AN3-11A	..BOLT		2
	NAS43-3-43	..SPACER		2
	AN960D10	..WASHER		2
	MS21042L3	..NUT		2
-13	AN8008D13	..INSULATOR		4
R -14	MS35206-245	..SCREW		16
-14A	NO NUMBER	..JUMPER - (IAW C-12-114-000/CF-242)		1
	AN960D8L	..WASHER		16
	MS21042L08	..NUT		16
-15	AN6-15A	..BOLT		4
	AN960D616	..WASHER		4
	AN8013D3	..WASHER		4
	MS21042L6	..NUT		4
-16	NO NUMBER *	..BRACKET - TB6 & BATTERY IND AMPL SUPPORT		1
-17	MS27212-1-8 *	..TERMINAL BLOCK ASSY - (TB6)		1
	S1307V1-8 *	..STRIP - (V88308)		1
R	MS35206-219 *	..SCREW		2
	AN960D4L *	..WASHER		2
	MS21042L04 *	..NUT		2
	MS25227-2 *	..STRIP		2
	MS25226-2-2 *	..BUS		2
	AN960-5 *	..WASHER		8
	MS21042L05 *	..NUT		8
-18	BTI600-200A *	..AMPLIFIER - (SEP) (BATTERY TEMP IND)		1
	MS35214-27 *	..SCREW		4
-19	AN3C3A ***	..BOLT		2
	MS21042L3 ***	..NUT		2
	41A-52025-806 **	.PANEL INSTL - PILOTS FACIA		NP
	41A-52025-90	..PANEL ASSY - FACIA		1
-20	41A-52025-88	...PANEL		1
R -21	NO NUMBER *	...PLATE - BLANKING (FOR AIRCRAFT WITHOUT C-12-114-000/CF-526 EMBODIED)		1
R -21A	MS35207-265 *	...SCREW		4
	FFW92 *	...WASHER		4
	MS21042L3 *	...NUT		4
	*	IAW C-12-114-000/CF-515		
	**	IAW C-12-114-000/CF-320, 363 & 378		
	***	IAW C-12-114-000/CF-367		

	FIGURE AND INDEX NUMBER	GROUP / MAJOR ASSEMBLY / PART NUMBER		INSTRUMENT EQUIPMENT / COCKPIT INSTRUMENT EQUIPMENT / 1 2 3 4 5 6 7 NOMENCLATURE	EFFEC-TIVITY	UNITS PER ASSY
R	129 -22	R42F24383	*	BUTTON - BLANKING (80132) (FOR AIRCRAFT WITHOUT C-12-114-000/CF-526 EMBODIED)		1
	-22A		*	DELETED		
			*	DELETED		
			*	DELETED		
			*	DELETED		
	-23	MS35058-27		...SWITCH - (SEAT ADJUST)		1
	-24	Z2291W		...METER - (V11707) (ARBITRARY SCALE LOAD) FOR BRKDN SEE C-67-F58-000/MY-000		1
R		MS35214-29		...SCREW		4
		NAS487-13		...NUT		4
	-25	A6745C24		...FIXTURE - (V72914) (LIGHT)		1
		NAS43DD4-8		...SPACER		1
		MS25237-327		...LAMP		1
	-28	MS24658-230		...SWITCH - (PITOT & STALL WARNING)		1
	-29	MS35059-21		...SWITCH - (LANDING & TAXI LIGHT)		1
	-30	MS35058-23		...SWITCH - (WINDSHIELD & CANOPY DEMIST)		1
	-31	MS35058-23		...SWITCH - (WINDSHIELD DEICE SIHB)		1
	-32	MS25224-1		...GUARD		2
	-33	MS25010B11		...LIGHT ASSY		1
		MS25237-327		....LAMP		1
		41A-57136-802		...HARNESS ASSY - PILOTS FACIA PANEL WIRING		1
	-34	41A-50729		...PANEL - EDGELIT PLASTIC		4
		MS35273-30		...SCREW		4
		S1426-6		...WASHER - (V88308)		4
	-35	NAS623-3-2		..SCREW		4
		AN960D10L		..WASHER		1
	-36	AE341-7C		.COMPASS - (V07213) (MAGNETIC)		4
		AN515PB6R14		.SCREW		4
		AN960D8		.WASHER		4
		NAS487-16		.NUT		1
	-37	NO NUMBER		.BRACKET - ACCELEROMETER SUPPORT (IAW C-12-114-000/CF-320)		4
	-38	AN3C3A		.BOLT		4
		AN960C10L		.WASHER		4
		MS35338-100		.LOCK WASHER		1
	-39	AE34C-28		.ACCELEROMETER - (V07213) (MECHANICAL) FOR BRKDN SEE C-16-682-000/MF-000		1
R	-39A	NO NUMBER		.LOCKING BAR - (ACCELEROMETER) (IAW C-12-114-000/CF-457) (RELOCATED TO G METER ON LH FACIA PANEL WHEN C-12-114-000/CF-526 IS EMBODIED)		
R	-40	MS35214-29		.SCREW		3
		AN960D8L		.WASHER		3
		NAS487-13		.NUT		3
		41A-52025-805		.PANEL INSTL - COPILOTS FACIA (IAW C-12-114-000/CF-033 & 325)		NP
		41A-52025-89		..PANEL ASSY - FACIA		1
	-41	41A-52025-87		...PANEL		1
	-42	MS35058-27		...SWITCH - (SEAT ADJUST)		1
	-43	MS25089-5C		...SWITCH - (HORN CUT-OUT)		1
	-44	MS25C89-4C		...SWITCH - (AUDIO MUTING)		1
	-45	MS35058-23		...SWITCH - (LANDING GEAR UP OVERRIDE)		1
	-46	8916K759		...GUARD - (V15605)		1
	-47	MS25010B11		...LIGHT ASSY		2
		MS25237-327		...LAMP		2
	-48	41A-50730		...PANEL - EDGELIT PLASTIC		1
R		MS35214-27		...SCREW		2
		S1426-6		...WASHER - (V88308)		2
	-49	NAS623-3-2		..SCREW		4
		AN960D10L		..WASHER		4
			*	IAW C-12-114-000/CF-515		

	FIGURE AND INDEX NUMBER	GROUP / MAJOR ASSEMBLY / PART NUMBER		INSTRUMENT EQUIPMENT / COCKPIT INSTRUMENT EQUIPMENT / 1 2 3 4 5 6 7 NOMENCLATURE	EFFEC-TIVITY	UNITS PER ASSY
R	129 -49A	SS48152K2215		BUTTON - (61864) (IAW C-12-114-000/CF-482) (FOR AIRCRAFT WITHOUT C-12-114-000/CF-526 EMBODIED)		1
	-49B	PT06A-14-15S	*	CONNECTOR - (V77820)		REF
	-	C72C47115-1		PANEL ASSY - SERVOED ALTIMETER TEST (IAW C-12-114-000/CF-357) (SEE FIG. 109A)		
	-50	C71C47114-1		.PANEL - TEST PLUG MOUNTING		1
	-51	C71B47355-1		.DECAL - (ALTIMITER TEST)		1
		C72C47117-1		.HARNESS ASSY - (J1A TEST RCPT WIRING)		1
	-52	MS3120E20-41S		..RECEPTACLE		1
	-53	MS35206-218		.SCREW		4
		AN960-4		.WASHER		4
		MS35338-40		.LOCK WASHER		4
		MS35649-242		.NUT		4
		C71C00269-1		.P[illegible] ASSY - ALTIMETER TEST POINT SHORTING		1
		C71C00268-1		.[illegible] ASSY - (JUMPER WIRED)		1
	-54	PT06E20-41P		...PLUG - (V77820)		1
	-55	C71B00267-1		..WASHER & CHAIN ASSY		1
	-56	508-7545-504	**	LAMP HOLDER - (V72619)		1
		MS18235-38T	**	LAMP CARTRIDGE		1
		30-83059	**	DECAL - (V88308)		1
R	-57	AE340-2B	***	ACCELEROMETER - (V07213)		1
R	-58	MS35214-30	***	SCREW		3
R	-59	NO NUMBER	***	PLATE - BLANKING		1
R	-60	MS35207-265	***	SCREW		2
				-000-		
R			*	IAW C-12-114-000/CF-515		
R			**	IAW C-12-114-000/CF-467		
R			***	IAW C-12-114-000/CF-526		

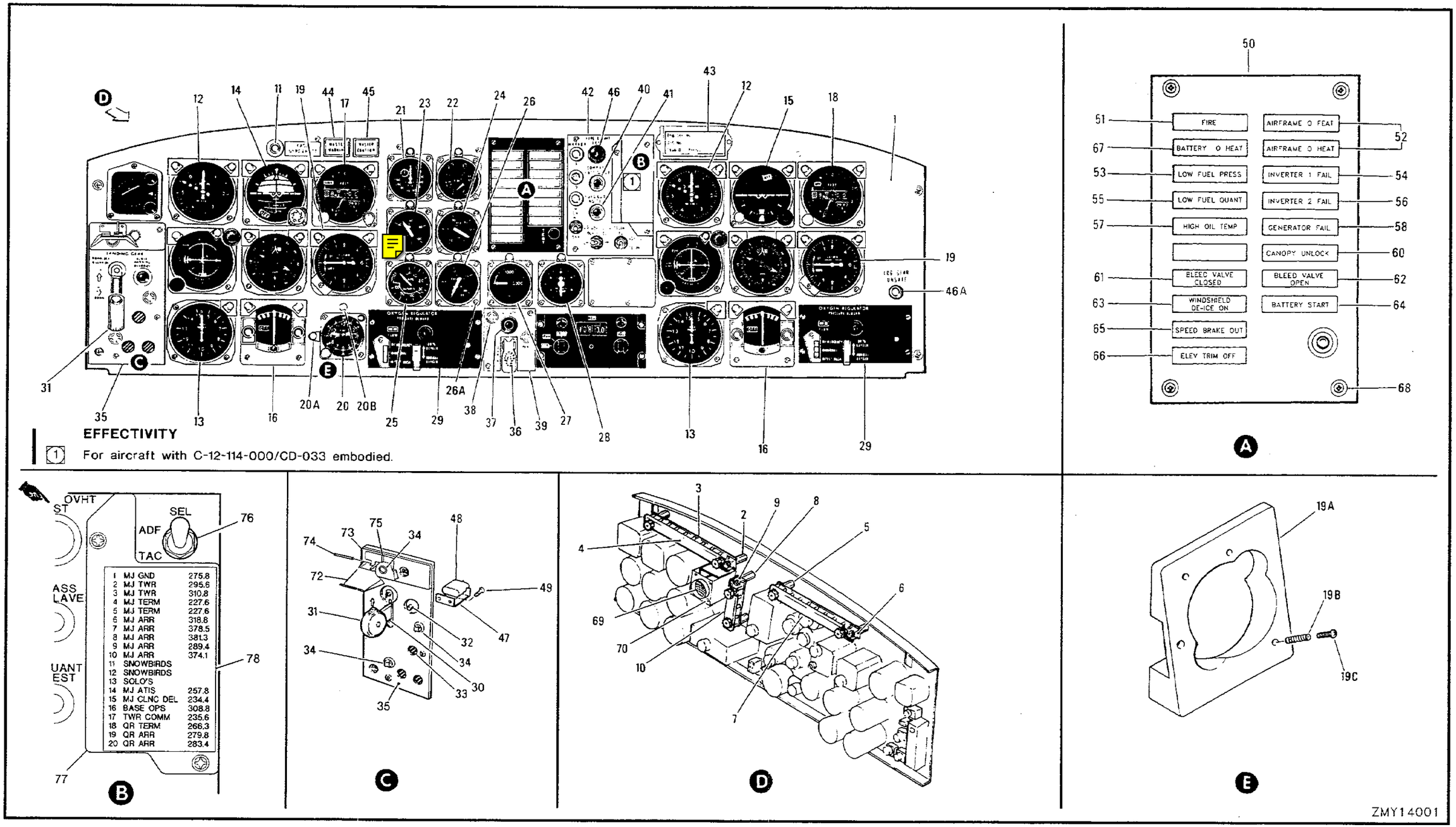

FIGURE 130 INSTRUMENT PANEL

FIGURE AND INDEX NUMBER	GROUP / MAJOR ASSEMBLY / PART NUMBER	INSTRUMENT EQUIPMENT / INSTRUMENT PANEL / 1 2 3 4 5 6 7 NOMENCLATURE	EFFEC-TIVITY	UNITS PER ASSY
130 -	C72D47119-1	PANEL ASSY - INSTRUMENT (IAW C-12-114-000/CF-356, 357, 385 & CD-031) (SEE FIG. 129)		1
	C72D47118-1	.PANEL ASSY - INSTRUMENT		1
- 1	41A-52003-90	..PANEL - INSTRUMENT		1
	40S5-5	..STUD - (V71286)		4
	4002G	..GROMMET - (V71286)		4
	R4G	..RING - (V71286)		4
	107A	.RECEPTACLE - (V04211)		1
- 2	S1331A7	.POST - (V88308)		3
R	MS35206-243	.SCREW		3
	MS35337-40	.LOCK WASHER		3
- 3	MS27212-1-15	.TERMINAL BLOCK ASSY - (TB17)		1
	S1307H1-15	.STRIP - (V88308)		1
R	MS35206-215	.SCREW		3
	MS35335-31	.LOCK WASHER		3
	MS25227-2	.STRIP		2
	MS25227-1	.STRIP		1
	MS25226-2-5	.BUS		1
	AN960-6	.WASHER		15
	MS21042L06	.NUT		15
- 4	MS18029-1S15	.COVER ASSY		1
- 5	S1331A6	.POST - (V88308)		3
R	MS35206-243	.SCREW		3
	MS35337-40	.LOCK WASHER		3
- 6	MS27212-1-16	.TERMINAL BLOCK ASSY - (TB16)		1
	S1307H1-16	.STRIP - (V88308)		1
R	MS35206-215	.SCREW		3
	MS35335-31	.LOCK WASHER		3
	MS25227-2	.STRIP		2
	MS25227-1	.STRIP		1
	MS25226-2-4	.BUS		1
	JAN1N540	.DIODE		2
	AN960-6	.WASHER		16
	MS21042L06	.NUT		16
- 7	MS18029-1S16	.COVER ASSY		1
- 8	S1331A4	.POST - (V88308)		2
	MS24693-48	.SCREW		2
- 9	MS27212-1-5	.TERMINAL BLOCK ASSY - (TB50)		1
	S1307V1-5	.STRIP - (V88308)		1
R	MS35206-215	.SCREW		2
	MS35335-31	.LOCK WASHER		2
	MS25227-1	.STRIP		2
	AN960-6	.WASHER		5
	MS21042L06	.NUT		5
-10	MS18029-1S5	.COVER ASSY		1
-11	MS25089-4C	.SWITCH - (FAST GYRO ERECTION)		1
-12	C90015CX10	.INDICATOR - (V09708) (AIRSPEED) FOR BRKDN SEE C-16-110-000/MY-000		2
	B6610C	.FIXTURE - (V72914) (LIGHTING)		2
	MS25237-327	.LAMP		4
	MS24693-B933	.SCREW		4
R	MS35214-109	.SCREW		2
	AN960D8L	.WASHER		6
	NAS487-15	.NUT		6

FIGURE AND INDEX NUMBER	GROUP / MAJOR ASSEMBLY / PART NUMBER		INSTRUMENT EQUIPMENT / INSTRUMENT PANEL / 1 2 3 4 5 6 7 NOMENCLATURE	EFFEC-TIVITY	UNITS PER ASSY
130 -	41A-52004-138		.MACHMETER ASSY		2
-13	C90004-1C		..MACHMETER - (V09708) (TYPE A-2B/C) FOR BRKDN SEE C-16-123-000/MY-000		1
	B6610C	*	..FIXTURE - (V72914) (LIGHTING)		1
	MS25237-327		..LAMP		1
	41A-52003-78		..WASHER - BONDING		1
	MS24693BB34	*	.SCREW		4
	AN960D8L		.WASHER		4
	NAS487-21	*	.NUT		4
-14	140140-01-01		.INDICATOR - (V35351) (TYPE ARU-73/A ATTITUDE) FOR BRKDN SEE C-16-219-000/MS-000		1
	B6611C		.FIXTURE - (V72914) (LIGHTING)		1
	MS25237-327		.LAMP		2
	MS24693-BB31		.SCREW		2
R	MS35214-30		.SCREW		2
	AN960D8L		.WASHER		2
	NAS487-15		.NUT		2
-15	AE300270-2A		.INDICATOR - (V07213) (TYPE J-8 ATTITUDE) FOR BRKDN SEE C-16-190-000/MY-Z01		1
			OR		
	AE300270-3A		.INDICATOR - (V07213)		1
	B6611C		.FIXTURE - (V72914) (LIGHTING)		2
	MS25237-327		.LAMP		2
	MS24693-BB32		.SCREW		2
R	MS35214-30		.SCREW		4
	AN960D8L		.WASHER		4
	NAS487-15		.NUT		2
-16	AE355-2A		.INDICATOR - (V07213) (TURN & SLIP) FOR BRKDN SEE C-16-171-000/MK-000		2
	B6602AC		.FIXTURE - (V72914) (LIGHTING)		2
	MS25237-327		.LAMP		4
	MS24693-BB33		.SCREW		4
R	MS35214-109		.SCREW		8
	AN960D8L		.WASHER		8
	NAS487-15		.NUT		1
-17	81-22-20		.INDICATOR - (V07213) (SERVOED ALTIMETER) FOR BRKDN SEE C-16-815-000/MK-000		1
-18	31236-10T-C11		.INDICATOR - (V07213) (ALTITUDE COMPUTER) FOR BRKDN SEE C-16-814-000/MN-000		2
	B6611C		.FIXTURE - (V72914) (LIGHTING)		4
	MS25237-327		.LAMP		4
	MS24693-BB33		.SCREW		2
R	MS35214-31		.SCREW		6
	AN960D8L		.WASHER		6
	NAS487-15		.NUT		2
-19	1636-6AA-B1		.INDICATOR - VERTICAL VELOCITY (BNX)		2
	B6610C		.FIXTURE - (V72914) (LIGHTING)		4
	MS25237-327		.LAMP		4
	MS24693-BB32		.SCREW		2
R	MS35214-30		.SCREW		6
	AN960D8L		.WASHER		6
	NAS487-15		.NUT		1
	8140344-1	**	.ADAPTER ASSY		1
-19A	8140344-2	**	..ADAPTER		2
-19B	MS122118	**	..INSERT		2
	MS122198	**	..INSERT		2
R -19C	MS35214-24	**	.SCREW		2
R	MS35214-27	**	.SCREW		1
-20	A13A2		.CLOCK - (V98429) (MODEL W33-7545-10) FOR BRKDN SEE C-65-152-000/MS-000		
		*	IAW C-12-114-000/CF-385		
		**	IAW C-12-114-000/CF-438		

FIGURE AND INDEX NUMBER	GROUP	INSTRUMENT EQUIPMENT	EFFEC-TIVITY	UNITS PER ASSY
	MAJOR ASSEMBLY	INSTRUMENT PANEL		
	PART NUMBER	1 2 3 4 5 6 7 NOMENCLATURE		
130 -20A	A6815C24	.FIXTURE - (V72914) (LIGHTING)		1
	MS25237-327	.LAMP		1
	MS35214-29	.SCREW		2
	AN960D8L	.WASHER		2
	NAS487-15	.NUT		2
-20B	SS51071	.PLUG - BUTTON (IAW C-12-114-000/CF-424)		1
-21	1559-10-03	.INDICATOR - (V89944) (ELECTRICAL TACHOMETER) FOR BRKDN SEE C-16-723-000/MY-000		1
-22	152B22A	.INDICATOR - (V35918) (EXHAUST GAS TEMP) (IAW C-12-114-000/CF-433)		1
-23	AE346-2A	.INDICATOR - (V07213) (OIL PRESSURE) FOR BRKDN SEE C-16-481-000/MS-000		1
-24	18-1417	.INDICATOR - (SOE) (HYDRAULIC PRESSURE) FOR BRKDN SEE C-16-494-000/MS-000		
-25	EA323-2H	.INDICATOR - (V89305) (FLAP POSITION) FOR BRKDN SEE C-16-661-000/MN-000		1
-26	JG602A1	.INDICATOR SYS - (MHR) (FUEL QUANTITY) (IAW 41A-50706-2) FOR BRKDN SEE C-16-542-000/MF-000		1
		OR		
	10558N01Y00	.INDICATOR SYS - (V61349)		1
	MS28055-11	.BEZEL - (FOR ITEMS 21 TO 26)		6
-26A	MS35265-2	.SCREW		24
-27	AN6011-1B	.INDICATOR - (V09487) (OXYGEN PRESSURE) FOR BRKDN SEE C-22-232-000/MS-000		1
-28	AC106-1P	.ALTIMETER - (V89944) (CABIN PRESS ALTITUDE) FOR BRKDN SEE C-16-480-000/MN-000		1
	A6815C24	.FIXTURE - (V72914) (LIGHTING)		8
	MS25237-326	.LAMP		8
	MS35214-29	.SCREW		32
	AN960D8L	.WASHER		32
	NAS487-15	.NUT		32
-29	19325-2	.PANEL - OXYGEN DILUTER DEMAND (V12282) FOR BRKDN SEE C-22-203-000/MS-000		2
-30	A50M6-4	.SWITCH ASSY - (V99145) (LDG/GR CONTROL) (IAW 41A-50751-4)		1
-31	A45I-2	..KNOB ASSY - (V99145) (USE ON SWITCH ASSY P/N A50M6-4)		1
	C101073	..KNOB ASSY - (V36123)		1
	MS25237-328	..LAMP		2
R	MS24693S270	.SCREW		2
-32	MS25089-4C	.SWITCH - (AUDIO WARNING OVERRIDE)		1
-33	AN5839-2	.INDICATOR - LANDING GEARPOSITION FOR BRKDN SEE C-16-654-000/MN-000		3
	MS24693-24	.SCREW		6
-34	MS25010B12A	.LIGHT ASSY		3
	MS25237-327	.LAMP		3
-35	41A-50715	.PANEL - EDGE LIGHTED PLASTIC		1
	MS35214-27	.SCREW		2
	MS35214-28	.SCREW		2
	S1426-6	.WASHER - (V88308)		4
-36	MS35059-23	.SWITCH - (CANOPY SELECTOR)		1
	MS25224-1	.GUARD		1
-37	MS25089-3CR	.SWITCH - (CANOPY ACTUATOR)		1
-38	MS25010B12A	.LIGHT ASSY		2
-39	41A-50739	.PANEL - EDGE LIGHTED PLASTIC		1
	MS35214-27	.SCREW		2
	S1426-6	.WASHER - (V88308)		2
-40	MS25089-5C	.SWITCH - (COMPASS FAST SLAVE)		1
-41	MS25089-4C	.SWITCH - (FUEL QUANTITY INDICATOR TEST)		1
-42	41A-50733	.PANEL - EDGE LIGHTED PLASTIC		1
	MS35214-27	.SCREW		4
	S1426-6	.WASHER - (V88308)		4

FIGURE AND INDEX NUMBER	GROUP	INSTRUMENT EQUIPMENT	EFFEC-TIVITY	UNITS PER ASSY
	MAJOR ASSEMBLY	INSTRUMENT PANEL		
	PART NUMBER	1 2 3 4 5 6 7 NOMENCLATURE		
130 -43	NO NUMBER	.HOLDER - PLACARD (OIL PRESSURE) (IAW C-12-114-000/CF-278)		1
	41A-57135-802	.HARNESS ASSY - INSTRUMENT PANEL		1
-44	1227-1	..LIGHT ASSY - (V96182) (MASTER WARNING)		1
	10HR1V13	...LENS - ENGRAVED (V96182)		1
	10HL(R)	...FILTER - LAMP (V96182)		4
-45	1227-2	..LIGHT ASSY - (V96182) (MASTER CAUTION)		1
	10HR1V13	...LENS - ENGRAVED (V96182)		1
	10HL(A)	...FILTER - LAMP (V96182)		4
	MS25237-327	..LAMP		8
-46	61919-2	..SWITCH - (V38501) (FIRE & OVERHEAT DET TEST) (IAW C-12-114-000/CF-506)		1
-46A	MS25041-6	..LIGHT ASSY - (LANDING GEAR UNSAFE)		1
	MS25237-327	..LAMP		1
	41A-42219	..RELAY ASSY		1
-47	41A-42219-2	...BRACKET - RELAY SUPPORT		1
-48	RY4NA3B3L01	...RELAY - (LDG/GR AUDIO WARNING OVERRIDE)		1
	MS35206-203	...SCREW		2
	AN936A2	...LOCK WASHER		2
	AN340-2	...NUT		2
-49	MS24693-3	.SCREW		2
-50	4140-100-7M	.BOX ASSY - (V96182) (MASTER WARNING) (IAW C-12-114-000/CF-311 & 354)		1
	4140-409-7	..NAMEPLATE - (V96182)		1
	41A-50704-40	..CAPSULE - (V96182)		18
-51	4140-319-1	..LENS & LEGEND - (FIRE) (IAW 41A-50704-21)		1
-52	4140-319-2	..LENS & LEGEND - (AIRFRAME O/HEAT) (IAW 41A-50704-22)		2
-53	4140-319-4	..LENS & LEGEND - (LOW FUEL PRESS) (IAW 41A-50704-25)		1
-54	4140-319-6	..LENS & LEGEND - (INVERTER 1 FAIL) (IAW 41A-50704-26)		1
-55	4140-319-7	..LENS & LEGEND - (LOW FUEL QUANT) (IAW 41A-50704-27)		1
-56	4140-319-8	..LENS & LEGEND - (INVERTER 2 FAIL) (IAW 41A-50704-28)		1
-57	4140-319-9	..LENS & LEGEND - (HIGH OIL TEMP) (IAW 41A-50704-29)		1
-58	4140-319-10	..LENS & LEGEND - (GENERATOR FAIL) (IAW 41A-50704-30)		1
-59	41A-50704-23 *	..LENS - BLANK		1
-60	4140-319-12	..LENS & LEGEND - (CANOPY UPLOCK) (IAW 41A-50704-32)		1
-61	41A-50704-33	..LENS & LEGEND - (BLEED VALVE CLOSED)		1
-62	41A-50704-34	..LENS & LEGEND - (BLEED VALVE OPEN)		1
-63	101-0536-65-7	..LENS & LEGEND - (WINDSHIELD DE-ICE ON)		1
-64	364-14503-018	..LENS & LEGEND - (BATTERY START)		1
-65	4140-319-14	..LENS & LEGEND - (SPEED BRAKE OUT) (IAW 41A-50704-37)		1
-66	4140-319-15	..LENS & LEGEND - (ELEVATOR TRIM TAB OFF) (IAW 41A-50704-38)		1
-67	363-14503-018	..LENS & LEGEND - (BATTERY O/HEAT)		1
	MS25237-327	..LAMP		36
-68	MS35214-27	.SCREW		4
	AN960D6L	.WASHER		4
	AN960D8L	.WASHER		4
	NAS487-15	.NUT		4
	41A-57149-802	.HARNESS ASSY - INSTRUMENT PANEL WIRING		1
-69	PT00SE22-55P	..RECEPTACLE - (BAC) (J9 PANEL DISC)		1
-70	MS35214-14	.SCREW		4
	AN960D4L	.WASHER		4
	MS21042L04	.NUT		4
-71		DELETED		
	CAE9513001-1	GUARD ASSY - LDG PANEL LEVER (V35598) (IAW C-12-114-000/CF-520)		1
-72	CAE9513002-1	.HOOD SUBASSY (V35598)		1
-73	CAE9513003-1	.PLATE SUBASSY - MOUNTING (V35598)		1
-74	MS20253P2-150L	.PIN - HINGE		1
-75	LS1010-180	.SPRING - HINGE		1
	*	IAW C-12-114-000/CF-514		

	FIGURE AND INDEX NUMBER	GROUP		INSTRUMENT EQUIPMENT	EFFEC-TIVITY	UNITS PER ASSY
		MAJOR ASSEMBLY		INSTRUMENT PANEL		
		PART NUMBER		1 2 3 4 5 6 7 NOMENCLATURE		
R	130	NW4601107-1		PANEL MODIFICATION - VOR (SEE SECTION 13)		REF
R	-76	MS24523-22	*	.SWITCH - ADF		1
R	-77	NW4601143-1	*	.PLATE - MOUNTING		1
R	-78	NW4601144-1	*	.CARD - FREQUENCY		1
R		NW4601107-2	*	.PANEL - LIGHTING P.C.D.		1
R		NW4601107-3	*	.PANEL - VOR EDGE LITE (MADE FROM 41A-50733)		1
				-000-		
R			*	IAW C-12-114-000/CD-033		

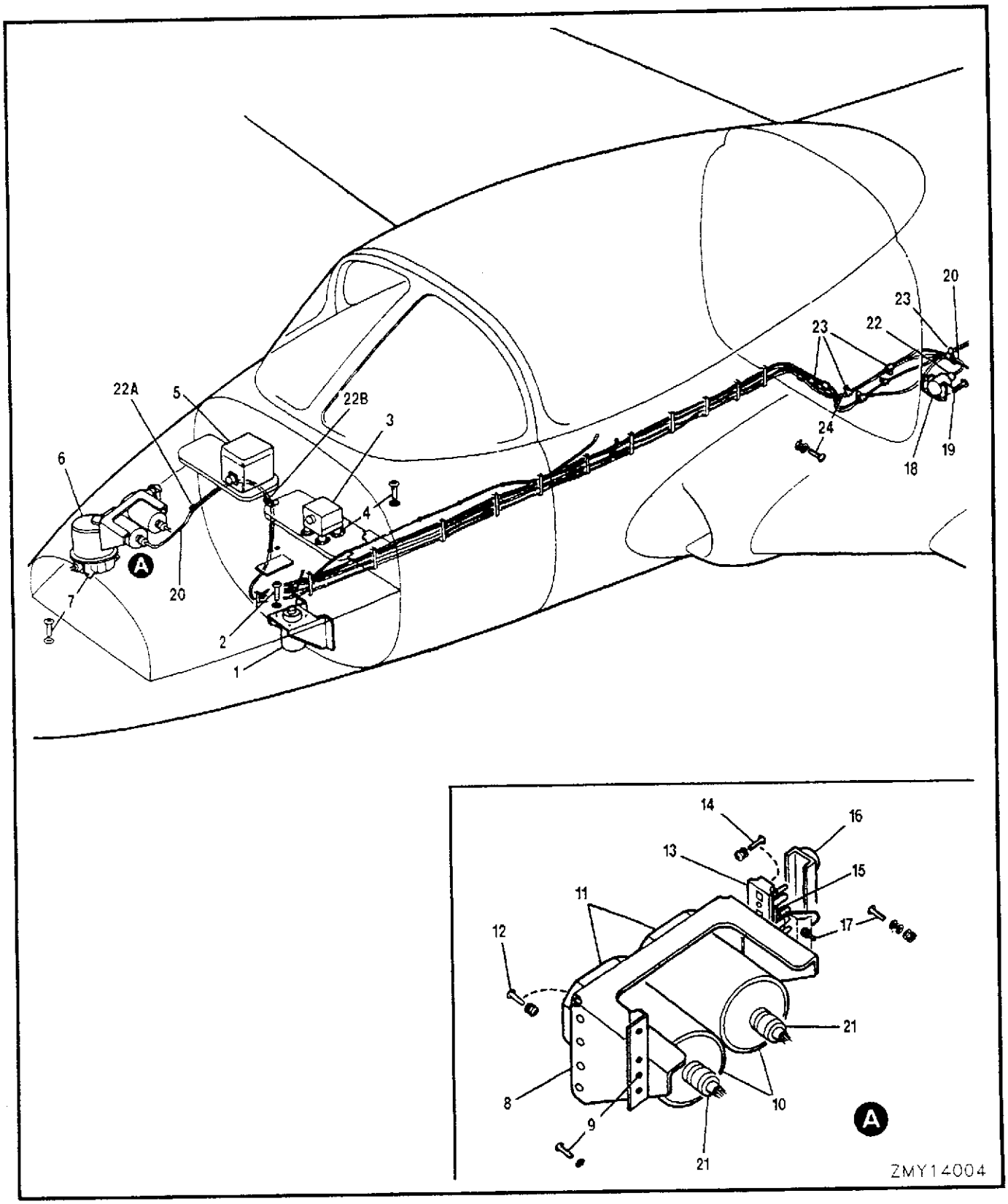

FIGURE 130A FORWARD FUSELAGE INSTRUMENT EQUIPMENT

FIGURE AND INDEX NUMBER	GROUP	INSTRUMENT EQUIPMENT	EFFEC-TIVITY	UNITS PER ASSY
	MAJOR ASSEMBLY	FORWARD FUSELAGE INSTRUMENT EQUIPMENT		
	PART NUMBER	1 2 3 4 5 6 7 NOMENCLATURE		
130A -	41A-42100	ELECTRICAL & ELEK EQUIPMENT INSTL - NOSE (SEE SECTION 12)		REF
- 1	ST106N	.TRANSMITTER - HYD PRESSURE 0-2500 PSI(AMG) FOR BKDN SEE C-16-850-000/MN-000		1
- 2	MS35206-229	.SCREW		4
	AN960D6L	.WASHER		4
- 3	INST8-7	.AMPLIFIER - COMPASS SIGNAL REPEATER FOR BKDN SEE C-57-279-000/MS-000		1
- 4	MS35206-245	.SCREW		8
	AN960D8	.WASHER		8
R - 5	653278	.AMPLIFIER - (V09708) (TYPE A-2/C CONTROL) FOR BKDN SEE C-57-269-A00/MY-000		1
- 6	90000	.CONTROL - (V09708) (DIR-GYRO TYPE S-3A/C) FOR BKDN SEE C-57-269-E00/MY-000		1
- 7	NAS623-4-5	.SCREW - (GYRO RETAINING)		3
	AN960PD416	.WASHER		3
- 8	NW4505001-1	.BRACKET ASSY - REGISTERING ACCLRM MOUNTING		1
- 9	NAS623-2-2	.SCREW	A	6
	AN960D8	.WASHER	A	6
-10	AE322-3B	.REGISTER - (V07213) (TYPE 2 ACCELEROMETER) FOR BKDN SEE C-16-683-000/MS-000		2
-11	MS28055-12	.BEZEL - INSTRUMENT MOUNTING		2
-12	MS35206-233	.SCREW	A	8
	AN960D8	.WASHER	A	8
	NAS487-13	.NUT	A	8
-13	MS27212-1-5	.TERMINAL BLOCK ASSY - (T845)		1
	S1307V1-5A	.STRIP - (V88308)	A	1
-14	MS35206-215	.SCREW	A	2
	AN960D4L	.WASHER	A	2
	MS21083N04	.NUT		2
	MS25227-1	.STRIP	A	1
	MS25227-2	.STRIP	A	1
-15	MS25226-2-2	.BUS - (ON POST 1 & 2)	A	1
	AN960-6	.WASHER	A	5
	MS21042N06	.NUT		5
-16	MS18029-1S5	.SHIELD		1
-17	MS35207-265	.SCREW - (N72 GROUND STUD)	A	1
	MS35333-39	.LOCK WASHER		1
	AN960-10L	.WASHER	A	2
	MS35338-43	.LOCK WASHER		2
	MS35650-302	.NUT		2
	41A-42101	ELECTRICAL & ELECTRONIC EQUIP INSTL - CENTRE FUSELAGE (SEE SECTION 12)		REF
-18	AE320-2C	.SENSOR - (V07213)(REGISTERING ACCELEROMETER) FOR BKDN SEE C-16-684-000/MS-000		1
-19	MS35206-228	.SCREW		4
	41A-43013	HARNESS INSTL - NOSE ELECTRICAL (SEE SECTION 12)		REF
-20	41A-57011	.HARNESS ASSY - RECORDING ACCELEROMETER	001-010	1
	41A-57011-800	.HARNESS ASSY - RECORDING ACCELEROMETER	076-081	1
-21	PT06SE12-10S	..PLUG - (BAC) (NO. 1 & 2 COUNTING ACCELEROMETER DISCONNECT)		2
-22	PT06SE18-32S	..PLUG - (BAC) (TRANSDUCER ACCLRM DISC		1
-22A	MS21919WDG7	.CLAMP	A	1
-22B	MS21919WDG8	.CLAMP	A	1
	41A-43012	TROUGH INSTL - FUSELAGE HARNESS (SEE SECTION 12)		REF
-23	MS21919WDG6	.CLAMP - (FUS STA 257 ACCELEROMETER HARNESS RETAINING)	A	4
-24	MS35206-245	.SCREW	A	4
	AN960PD8L	.WASHER	A	4
	MS21042L08	.NUT	A	4

-000-

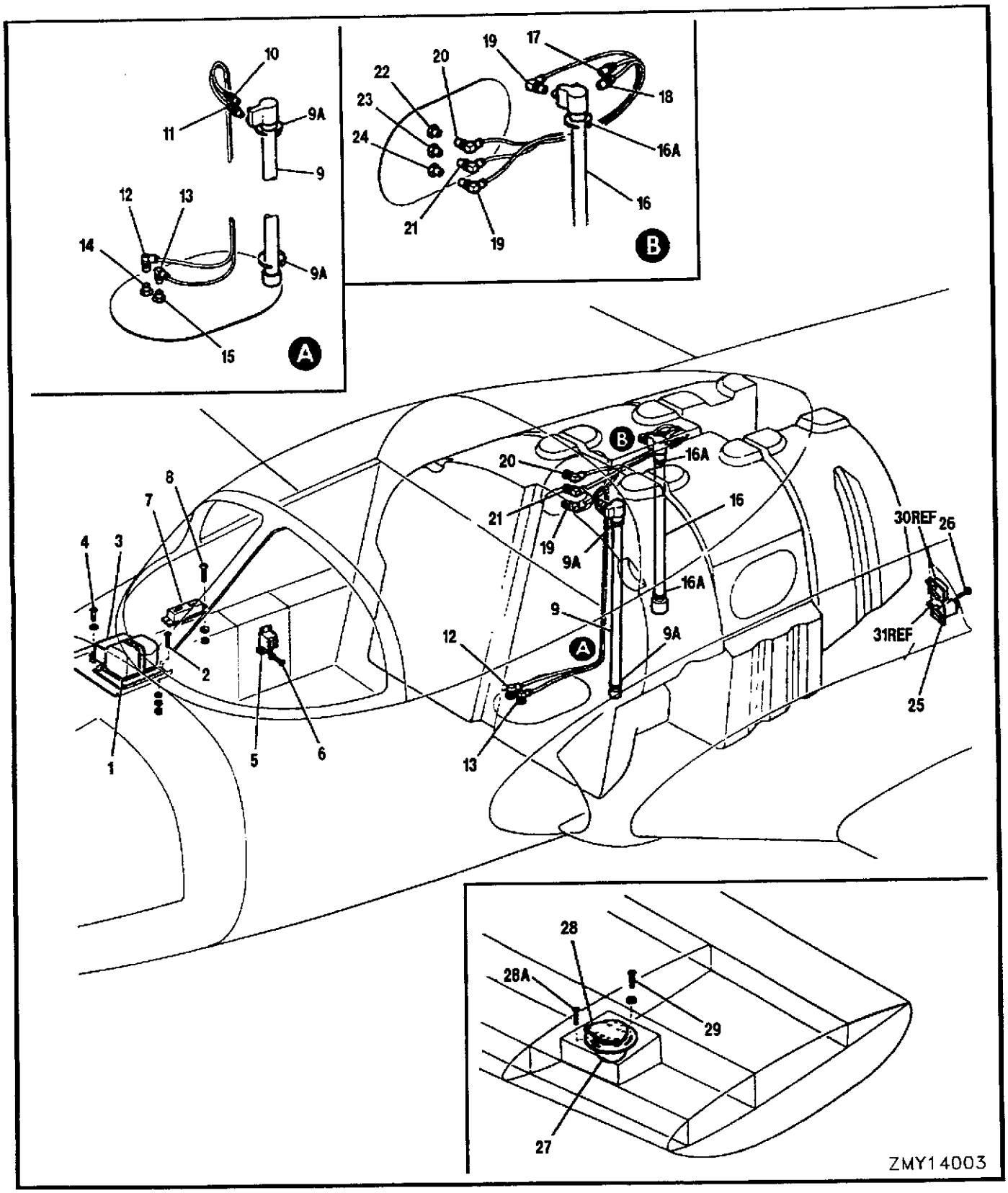

FIGURE 130B CENTRE FUSELAGE INSTRUMENT EQUIPMENT

FIGURE AND INDEX NUMBER	GROUP: INSTRUMENT EQUIPMENT MAJOR ASSEMBLY: CENTRE FUSELAGE INSTRUMENT EQUIPMENT PART NUMBER	1 2 3 4 5 6 7 NOMENCLATURE	EFFEC-TIVITY	UNITS PER ASSY
130B -	41A-42203	ELECTRICAL & ELECTRONIC EQUIP. INSTL - FUS STA 149 BULK-HEAD (SEE SECTION 12)		REF
- 1	124623-01	.GYRO - VERTICAL TYPE MD-1 (V31435) FOR BKDN SEE C-16-212-000/MY-000		1
- 2	MS35207-262	.SCREW		4
	S1236-10	.WASHER		AR
	S1236-10L	.WASHER		AR
	AN960PD10L	.WASHER		4
	MS21042L3	.NUT		4
- 3	138474-01-01	.GYRO - RATE SWITCHING TYPE MC-1 (V31435) FOR BKDN SEE C-16-216-000/MY-000		1
- 4	MS35206-246	.SCREW		4
	AN960PD8L	.WASHER		4
	SL201-5AA11	.CLIPNUT - (V97393)		4
	41A-52024	ELECTRICAL EQUIP. INSTL - STBD CONSOLE (SEE SECTION 12)		REF
- 5	MS24568D1	.RELAY - (K3X)		1
- 6	MS35206-244	.SCREW		4
	AN960D8L	.WASHER		4
	SL88-832-38-09	.CLIPNUT - (V97393)(FOR SPARES ORDER SL100-08)		4
	SL100-08	.CLIPNUT - (V97393) (SPARE FOR SL88-832-38-09)		
- 7	AN5534-2	.RESISTOR		1
- 8	MS35206-244	.SCREW		2
	AN960D8L	.WASHER		2
	MS21042L08	.NUT		2
	41A-42101	ELECTRICAL & ELECTRONIC EQUIP. INSTL - CENTRE FUSELAGE (SEE SECTION 12)		REF
	41A-43022	.PROBE & HARNESS INSTL - FORWARD FUEL TANK QUANTITY		NP
- 9	FG220A217	..TANK UNIT - (MHR) (AS PER 41A-50706-4) FOR BKDN SEE C-16-542-000/MF-000		1
- 9A	MS17821-1-9	..STRAP		2
	41A-57320	..HARNESS ASSY - FWD TANK PROBE & DISCONN		1
-10	6817-1	...CONNECTOR - (V95712) (FORWARD TANK PROBE)		1
-11	6802-1	...CONNECTOR - (V95712) (FORWARD TANK PROBE)		1
-12	6825-1	...CONNECTOR - (V95712) (FUEL TANK DISCONNECT)		1
-13	6810-1	...CONNECTOR - (V95712) (FUEL TANK DISCONNECT)		1
-14	6206-1	..ADAPTER - (V95712)		1
		OR		
	20AS132-3	..ADAPTER		1
-15	6207-1	..ADAPTER - (V95712)		1
	41A-43021	.PROBE & HARNESS INSTL - CENTRE FUEL TANK QUANTITY (RH)		NP
-16	FG250A45	..TANK UNIT - (MHR) (AS PER 41A-50706-8) FOR BKDN SEE C-16-542-000/MF-000		1
-16A	MS17821-1-9	..STRAP		2
	41A-57319	..HARNESS ASSY - CTR TANK PROBE & DISCONN		1
-17	6817-1	...CONNECTOR - (V95712) (CENTRE TANK PROBE)		1
-18	6802-1	...CONNECTOR - (V95712) (CENTRE TANK PROBE)		1
-19	20P172-3	...CONNECTOR - (V24931) (CENTRE TANK PROBE & DISCONNECT)		2
-20	6825-1	...CONNECTOR - (V95712) (FUEL TANK DISCONNECT)		1
-21	6810-1	...CONNECTOR - (V95712) (FUEL TANK DISCONNECT)		1
-22	6206-1	..ADAPTER - (V95712)		1
		OR		
	20AS132-3	..ADAPTER		1
-23	6207-1	..ADAPTER - (V95712)		1
-24	6208-1	..ADAPTER - (V95712)		1
	41A-90851	FOLLOW UP SYS MECH INSTL - FLAP (SEE SECTION 7)		REF
R -25	MIL-T-5583A	.TRANSMITTER - FOLLOW UP FOR BKDN SEE C-16-656-000/MY-000		1
-26	MS24693-28	.SCREW		4
	41A-42103-60	ELECTRICAL EQUIP. INSTL - PORT WING (SEE SECTION 12)		REF
-27	664543	.FLUX VALVE - TYPE C2/C (V09708)		1

FIGURE AND INDEX NUMBER	GROUP	INSTRUMENT EQUIPMENT	EFFEC-TIVITY	UNITS PER ASSY
	MAJOR ASSEMBLY	CENTRE FUSELAGE INSTRUMENT EQUIPMENT		
	PART NUMBER	1 2 3 4 5 6 7 NOMENCLATURE		
130B -28	656767	.COMPENSATOR - TYPE C2/C (V09708)		1
R -28A	MS35214-17	.SCREW		6
R -29	MS35214-27	.SCREW		3
	S1246F10-24-31	.WASHER - (V88308)		3
-30	C75509	TRANSMITTER - (STALL WARNING POSITION) (SEE SECTION 12)		REF
-31	41A-90873	LEVER - FLAP POSITION TRANSMITTER (SEE SECTION 7)		REF

-000-

SECTION 15

PITOT STATIC SYSTEM

TABLE OF CONTENTS

FIGURE	TITLE	PAGE
131	COCKPIT AREA PITOT STATIC SYSTEM	15-02
132	WING PITOT STATIC SYSTEM	15-06

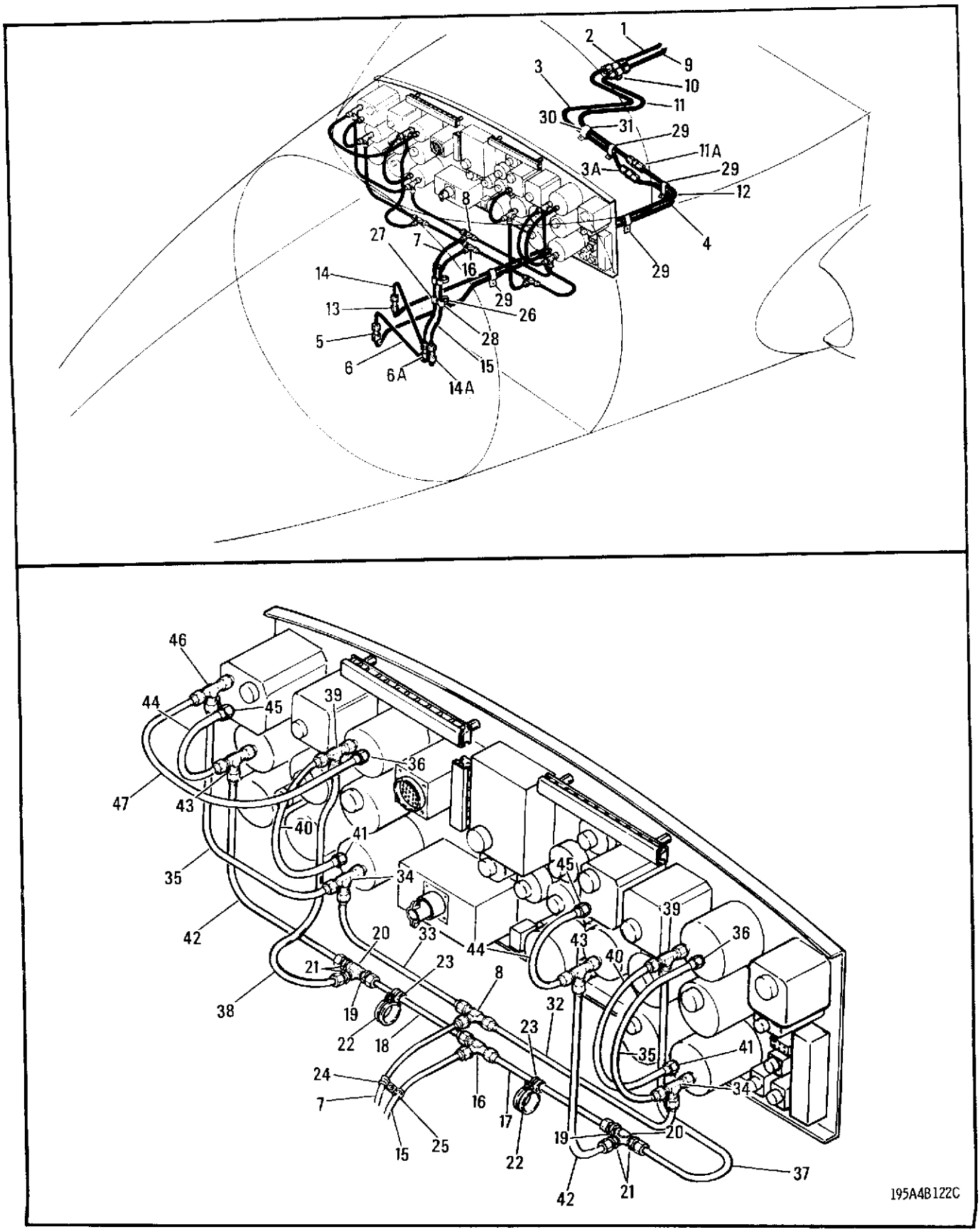

FIGURE 131 COCKPIT AREA PITOT STATIC SYSTEM

FIGURE AND INDEX NUMBER	GROUP	PITOT STATIC SYSTEM	EFFEC-TIVITY	UNITS PER ASSY
	MAJOR ASSEMBLY	COCKPIT AREA PITOT STATIC SYSTEM		
	PART NUMBER	1 2 3 4 5 6 7 NOMENCLATURE		
131 -	41A-42125	LINE INSTL - COCKPIT AREA PITOT STATIC (SEE SECTION 3)		NP
- 1	41A-42126-8	.LINE ASSY - PITOT (WING STA 40 TO FUS STA 229)		1
- 2	AN804D4	.TEE		1
	AN960PD716	.WASHER		1
	AN924-4D	.NUT		1
	AN929A4	.CAP ASSY		1
- 3	41A-42126-36	.LINE ASSY - PITOT (FUS STA 229 TO BL12)		1
- 3A	AN815-4D	.UNION		1
- 4	41A-42126-14	.LINE ASSY - PITOT (BL12 TO FUS STA 162)		1
- 5	AN824-4D	.TEE		1
	AN929A4	.CAP ASSY		1
- 6	41A-42126-16	.LINE ASSY - PITOT (TEE TO ELBOW)		1
- 6A	AN837-4D	.ELBOW		1
	AN924-4D	.NUT		1
- 7	41A-42126-18	.LINE ASSY - PITOT (FUS STA 161 TO TEE AT INSTRUMENT PANEL)		1
- 8	AN824-4D	.TEE		1
- 9	41A-42126-20	.LINE ASSY - STATIC (WING STA 41 TO FUS STA 229)		1
-10	AN804D6	.TEE		1
	AN960PD916	.WASHER		1
	AN924-6D	.NUT		1
	AN929A6	.CAP ASSY		1
-11	41A-42126-38	.LINE ASSY - STATIC (FUS STA 229 TO BL11)		1
-11A	AN815-6D	.UNION		1
-12	41A-42126-26	.LINE ASSY - STATIC (BL11 TO FUS STA 164)		1
-13	AN824-6D	.TEE		1
	AN929A6	.CAP ASSY		1
-14	41A-42126-28	.LINE ASSY - STATIC (FUS STA 164 TEE TO ELBOW)		1
-14A	AN837-6D	.ELBOW		1
	AN924-6D	.NUT		1
-15	41A-42126-30	.LINE ASSY - STATIC (FUS STA 161 TO TEE AT INSTRUMENT PANEL)		1
-16	AN824-6D	.TEE		1
-17	41A-42126-32	.LINE ASSY - STATIC (BL8 TO TEE AT INSTRUMENT PANEL LH)		1
-18	41A-42126-34	.LINE ASSY - STATIC (BL8 TO TEE AT INSTRUMENT PANEL RH)		1
-19	AN919-6D	.REDUCER		2
-20	AN938D4	.TEE		2
-21	AN815-4D	.UNION		4
	MS28778-4	.PACKING		6
-22	AN742-28	.CLAMP - (CLIP TO CROSS TUBE)		2
R -23	MS21919WG4	.CLAMP		2
	NAS623-3-3	.SCREW		2
	AN960-10L	.WASHER		2
	MS21042L08	.NUT		2
R -24	MS21919WG4	.CLAMP		1
R -25	MS21919WG6	.CLAMP		1
	AN515PB8R10	.SCREW		1
	AN960PD8L	.WASHER		1
	MS21042L08	.NUT		1
-26	738-14-8	.CLIP - (V00502) (CLIP TO OXYGEN LINE)		2
R -27	MS21919WG4	.CLAMP		2
R -28	MS21919WG6	.CLAMP		2
	AN515PB8R10	.SCREW		2
	AN960PD8L	.WASHER		2
	MS21042L08	.NUT		2
-29	445-4-6-2-8	.CLIP - (V00502)		6
	AN515PB8R10	.SCREW		6
	AN960PD8L	.WASHER		6
	MS21042L08	.NUT		2

FIGURE AND INDEX NUMBER	GROUP		PITOT STATIC SYSTEM	EFFEC-TIVITY	UNITS PER ASSY
	MAJOR ASSEMBLY		COCKPIT AREA PITOT STATIC SYSTEM		
	PART NUMBER		1 2 3 4 5 6 7 NOMENCLATURE		
131 -29A	AN515PB8R10		.SCREW		6
	AN960PD8L		.WASHER		6
	MS21042L08		.NUT		2
-30	MS21919WG4		.CLAMP		1
-31	MS21919WG6		.CLAMP		1
	AN515PB8R10		.SCREW		1
	AN960PD8L		.WASHER		1
	MS21042L08		.NUT		1
	41A-52004-808	*	PANEL ASSY - INSTRUMENT (MODIFIED)		REF
-32	AE1000616E0154		.HOSE ASSY - (PITOT)		1
-33	AE1000616E0150		.HOSE ASSY - (PITOT)		1
-34	MS20826-4D		.TEE		2
R -35	AE1000616E0160		.HOSE ASSY - (PITOT)		2
-36	AN816-4D		.NIPPLE		2
-37	AE1000616E0180		.HOSE ASSY - (STATIC)		1
-38	AE1000616E0160		.HOSE ASSY - (STATIC)		1
-39	MS20826-4D		.TEE		2
-40	AE1000616E0144		.HOSE ASSY - (STATIC) (V00624)		2
-41	AN816-4D		.NIPPLE		2
-42	AE1000616E0160		.HOSE ASSY - (V69705) (STATIC)		2
-43	MS20826-4D		.TEE - PIPE TO TUBE		2
R -44	AE1000616E0144		.HOSE ASSY - (V69705) (STATIC)		2
-45	AN916-6D	*	.REDUCER		2
	MS28778-6	*	.PACKING		2
-46	AN804-4D	*	.TEE		1
	AN924-4D	*	.NUT		1
	MS28778-4	*	.PACKING		1
-47	AE1000616E150	*	.HOSE ASSY - (PITOT) (V00624)		1
			-OOO-		
		*	IAW C-12-114-000/CF-357		

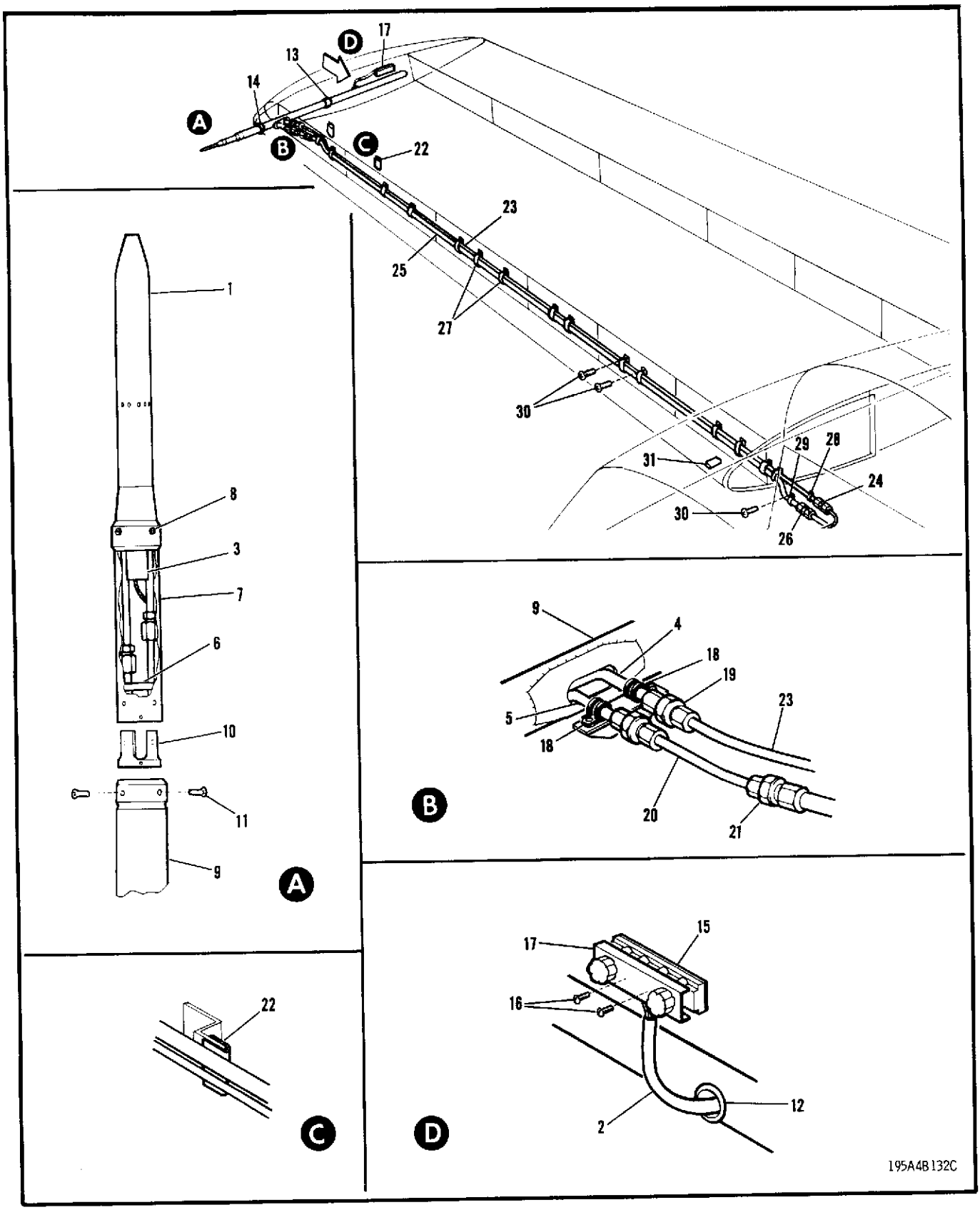

FIGURE 132 WING PITOT STATIC SYSTEM

FIGURE AND INDEX NUMBER	GROUP: PITOT STATIC SYSTEM MAJOR ASSEMBLY: WING PITOT STATIC SYSTEM PART NUMBER		1 2 3 4 5 6 7 NOMENCLATURE	EFFEC-TIVITY	UNITS PER ASSY
132 -	41A-42124-800		PITOT STATIC SYS INSTL - WING (MODIFIED BY C-12-114-000/CF-196) (SEE SECTION 1)		NP
	41-55750-804		.PITOT STATIC SYS INSTL - WING TIP		NP
	41-55750-806		..BOOM ASSY - PITOT STATIC		1
	41A-57503		...HARNESS ASSY - (PITOT STATIC TUBE)		1
- 1	AN5816-2		....TUBE - PITOT STATIC		1
- 2	S1244B15-49		....CONDUIT - (V88308)		1
- 3	AN3115-1		...RECEPTACLE		1
- 4	41-55750-184		...LINE ASSY - PITOT		1
- 5	41-55750-188		...LINE ASSY - STATIC		1
- 6	41-55750-100		...GROMMET		1
- 7	41-55851		...SLEEVE - PITOT STATIC TUBE		1
- 8	AN501A6-4		...SCREW		4
- 9	41-55750-12		...BOOM - PITOT STATIC (FOR SPARES ORDER 41-55750-168)		1
	41-55750-168	*	...BOOM ASSY - (SPARE FOR 41-55750-12)		
	MS21266-3N	*	...EDGING - PLASTIC NYLON		AR
-10	41A-42133		...RETAINER - PITOT STATIC SLEEVE		1
-11	MS24694-47		...SCREW		4
	MS35790-17		...LOCK WASHER		4
-12	MS35489-11		...GROMMET		1
-13	AN737TW58		..CLAMP		2
-14	41A-11011		..SEAL - PITOT SUPPORT TUBE		1
-15	MS27212-1-4		..TERMINAL BLOCK ASSY - (TB26)		1
	S1307H1-4		..STRIP - (V88308)		1
R -16	MS35206-217		..SCREW		2
	MS25227-1		..STRIP		2
	AN960-6		..WASHER		2
	MS21042L06		..NUT		2
-17	MS18029-1S4		..SHIELD		1
R -18	MS21919WDG4		..CLAMP		2
	AN530-8R8		..SCREW		2
	AN960PD8L		..WASHER		2
-19	MS21900D4		..ADAPTER		2
-20	41A-42126-42		..LINE ASSY - WING STA 208.5-202 STATIC		1
-21	AN919-6D		..REDUCER		1
-22	41-55750-58		..STRIP - RUBBING		2
-23	41A-42126-40		.LINE ASSY - WING STA 208.5-40 PITOT		1
-24	AN815-4D		.UNION		1
-25	41A-42126-4		.LINE ASSY - WING STA 202-41.5 STATIC		1
-26	AN815-6D		.UNION		1
	CA3106KE20-27P		...RECEPTACLE - (V71468) (FIREWALL DISC J60)		
-27	442-4-6-8		.CLIP - (V00502)		15
-28	AN742D4		.CLAMP		1
-29	AN742D6		.CLAMP		1
R -30	MS35206-247		.SCREW		17
	AN960PD8L		.WASHER		17
	NAS43DD3-28		.SPACER		17
-31	41A-42124-19		.STRIP - RUBBING		8
			-OOO-		
		*	IAW C-12-114-000/CF-420		

SECTION 16

FURNISHINGS EQUIPMENT

TABLE OF CONTENTS

FIGURE	TITLE	PAGE
133	COCKPIT FURNISHINGS	16-02
134	COCKPIT LINING & TRIM	16-06
134A	EJECTION SEATS	16-08
135	EJECTION SEATS	16-12
135A	EJECTION SEAT BALLISTICS	16-16
135B	EJECTION SEAT CONTROL & ADJUSTMENT	16-20

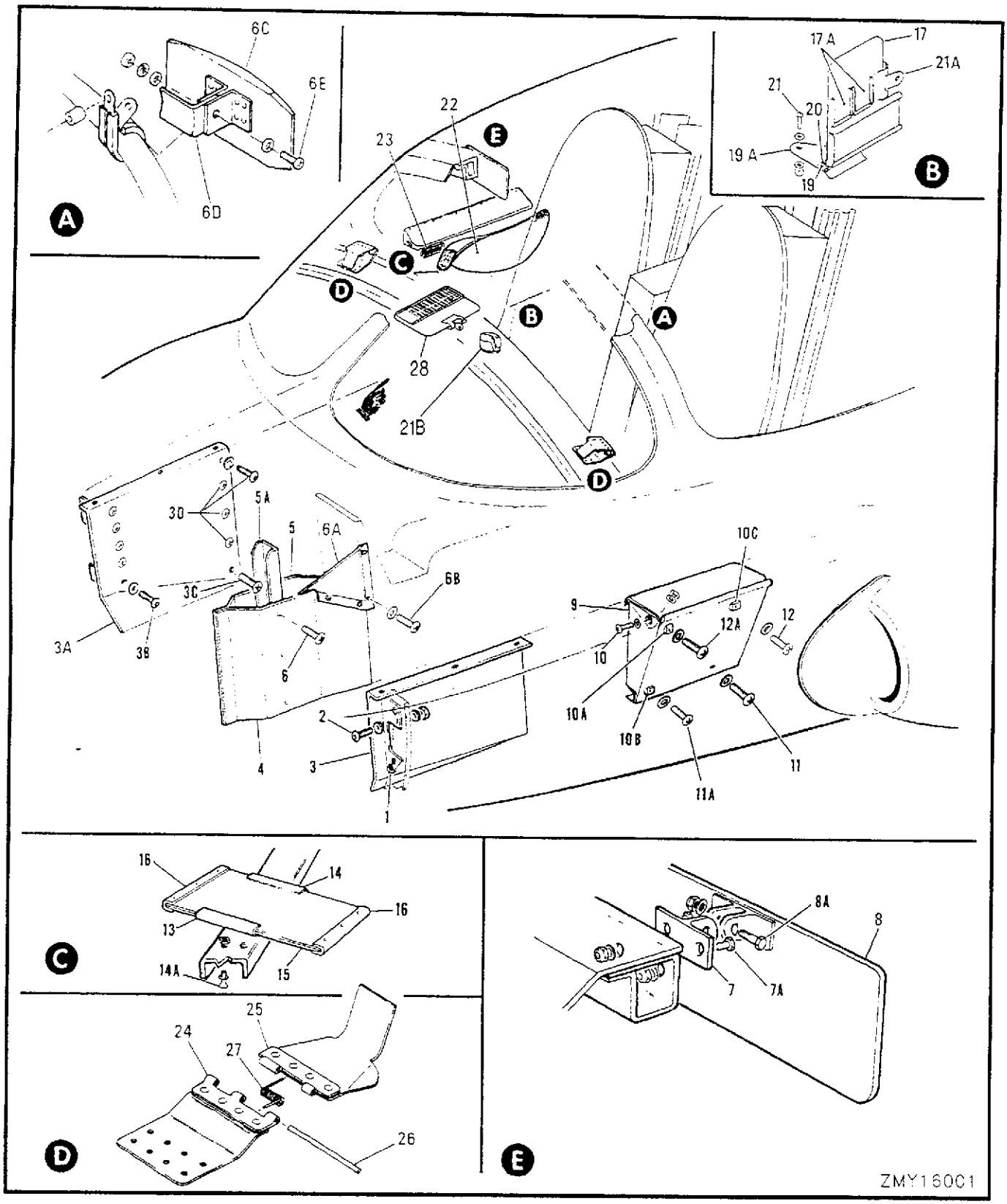

FIGURE 133 COCKPIT FURNISHINGS

	FIGURE AND INDEX NUMBER	GROUP / MAJOR ASSEMBLY / PART NUMBER		FURNISHINGS EQUIPMENT / COCKPIT FURNISHINGS / 1 2 3 4 5 6 7 NOMENCLATURE	EFFEC-TIVITY	UNITS PER ASSY
	133 -	41A-42200		COCKPIT EQUIP. INSTL - (SEE SECTION 12)		REF
		41A-41550		.LINING & TRIM INSTL - COCKPIT(SEE FIG.134)		REF
		41A-40550		.SEAT INSTL - EJECTION (SEE FIG. 135)		REF
		41A-42209		.PANEL INSTL - LH CONSOLE TRIM		NP
		41A-42209-1		.PANEL INSTL - RH CONSOLE TRIM		NP
	- 1	41A-42209-26		..ANGLE ASSY - LH		1
		41A-42209-27		..ANGLE ASSY - RH		1
R	- 2	MS35206-245		..SCREW		4
				OR		
R		MS35206-244		..SCREW		
		AN960PD8		..WASHER		8
		MS21042L08		..NUT		4
	- 3	41A-42209-34	*	..PANEL ASSY - LH (MOD)		1
	- 3A	41A-42209-35	*	..PANEL ASSY - RH (MOD)		1
	- 3B	MS24693C49	*	..SCREW		5
		A3135-017-24A	*	..WASHER - (TIN)		5
R	- 3C	MS35206-243		..SCREW		8
		SL201-5AA11		..CLIPNUT - (V97393)		5
		SL100-08		..CLIPNUT - (V97393)		3
	- 3D	MS24693C49	*	..SCREW		4
		A3135-017-24A	*	..WASHER - (TIN)		4
		41A-42210		.PANEL INSTL - CENTRE CONSOLE TRIM		NP
	- 4	41A-42210-4		..PANEL		1
	- 5	41A-42210-5		..PANEL - (MOD) (IAW C-12-114-000/CF-443)		1
	- 5A	41A-42128		..CHANNEL		1
R	- 6	MS35206-243		..SCREW		21
		SL201-5AA11		..CLIPNUT - (V97393)		21
	- 6A	41A-42210-26		..COVER - (CENTRE CONSOLE TRIM PANEL)		1
	- 6B	MS35206-228		..SCREW		4
		AN960D6L		..WASHER		4
		41A-42208		.MIRROR INSTL - REAR VIEW		NP
	- 6C	152NM	**	..MIRROR ASSY		2
	- 6D	NO NUMBER	**	..BRACKET		2
	- 6E	MS35207-264	**	..SCREW		2
		AN960C10L	**	..WASHER		2
		MS35338-43	**	..LOCKWASHER		2
		MS21044N3	**	..NUT		2
	- 7	41A-42208-2		..SUPPORT		2
	- 7A	NAS501-3-4A		..BOLT		4
		AN960-10L		..WASHER		4
	- 8	826RNMR		..MIRROR - (LIB)		2
	- 9A	NAS501-3-4A		..BOLT		2
		AN960-10L		..WASHER		2
		MS21042L3		..NUT		2
		41A-42211-2		.MAP STOWAGE INSTL - (LH)		NP
		41A-42211-4		.MAP STOWAGE INSTL - (RH)		NP
		41A-42211-6		..MAP BOX ASSY		1
	- 9	41A-42211-8		...MAP BOX		1
		41A-42211-52		...STRAP ASSY		1
		41A-42211-10		...COVER		1
	-10	MS35206-261		...SCREW		2
		S1246P13-14-40		...WASHER - (V88308)		2
		AN960PD10L		...WASHER		4
		MS21042L3		...NUT		2
	-10A	41A-42211-12		..PACKING		1
	-10B	41A-42211-14		..PACKING		1
	-10C	41A-42211-16		..PACKING		1
			*	IAW C-12-114-000/CF-330		
			**	IAW C-12-114-000/CF-392		

	FIGURE AND INDEX NUMBER	GROUP	FURNISHINGS EQUIPMENT	EFFEC-TIVITY	UNITS PER ASSY
		MAJOR ASSEMBLY	COCKPIT FURNISHINGS		
		PART NUMBER	1 2 3 4 5 6 7 NOMENCLATURE		
R	133 - 11	MS35207-261	..SCREW		1
R	- 11A	MS35207-264	..SCREW		1
R	- 12	MS35207-265	..SCREW		1
R	- 12A	MS35207-267	..SCREW		1
		MS35338-145	..WASHER		4
		RM52LHA4972-6-02	..CLIPNUT - (V97393)		2
		RM52LHA4972-8-02	..CLIPNUT - (V97393)		2
		41A-42212	.CHECK LIST INSTL		NP
	- 13	41A-42212-12	..GUIDE - INBOARD		1
	- 14	41A-42212-10	..GUIDE - OUTBOARD		1
	- 14A	MS24693-28	..SCREW		4
		AN960-6	..WASHER		4
		MS21042L06	..NUT		4
	- 15	41A-42212-16	..COVER ASSY - CHECK LIST		1
		41A-42212-4	...COVER - TOP		1
		41A-42212-6	...COVER - BOTTOM		1
	- 16	41A-42212-20	...EDGE - (TOP & BOTTOM)		2
		SE38	...EYELET - (UHN)		6
		AN960PD2	...WASHER		6
		41A-42213	.CHART HOLDER INSTL - LETDOWN		
		41A-42213-12	..CHART HOLDER ASSY	001-025	1
		41A-42213-16	..CHRT HOLDER ASSY	026-	1
	- 17	41A-42213-2	...CHART HOLDER	001-025	1
		41A-42213-14	...CHART HOLDER	026-	1
	- 17A	AN5800-1	...HOLDER - CARD (IAW C-12-114-000/CF-440)		2
	- 18		DELETED		
	- 18A		DELETED		
	- 19	41A-42213-8	...HINGE		1
	- 19A	41A-42213-4	...PLATE		1
	- 20	S1349	...SPRING - (V88308)		1
		41A-42213-20	...VELCRO - PILE		1
		41A-42213-19	..VELCRO - HOOK		1
R	- 21	MS35207-264	..SCREW		1
		S1246P13-20-187	..WASHER - (V88308)		1
		AN960PD10L	..WASHER		1
		MS21042L3	..NUT		1
	- 21A	NO NUMBER	..CLIP - PAPER (IAW C-12-114-000/CF-313)		1
	-21B	9440232	..GUARD - CHART HOLDER (IAW C-12-114-000/CF-513)		1
	- 22	NO NUMBER	BLIND FLYING HOOD - PEAK TYPE		1
	- 23	NO NUMBER	VELCRO HOOK		1
		8240306 *	HOOK ASSY - AIRCREW HELMET		2
	- 24	8240304-1 *	.HINGE - HALF		1
	- 25	8240305-1 *	.HINGE - HALF		1
	- 26	8240310-1 *	.PIN - HINGE		1
	- 27	S1440 *	.SPRING		1
R	- 28	NO NUMBER **	LAYOUT - C/B PANEL		1
			-OOO-		
		*	IAW C-12-114-000/CF-442		
R		**	IAW C-12-114-000/CS-037		

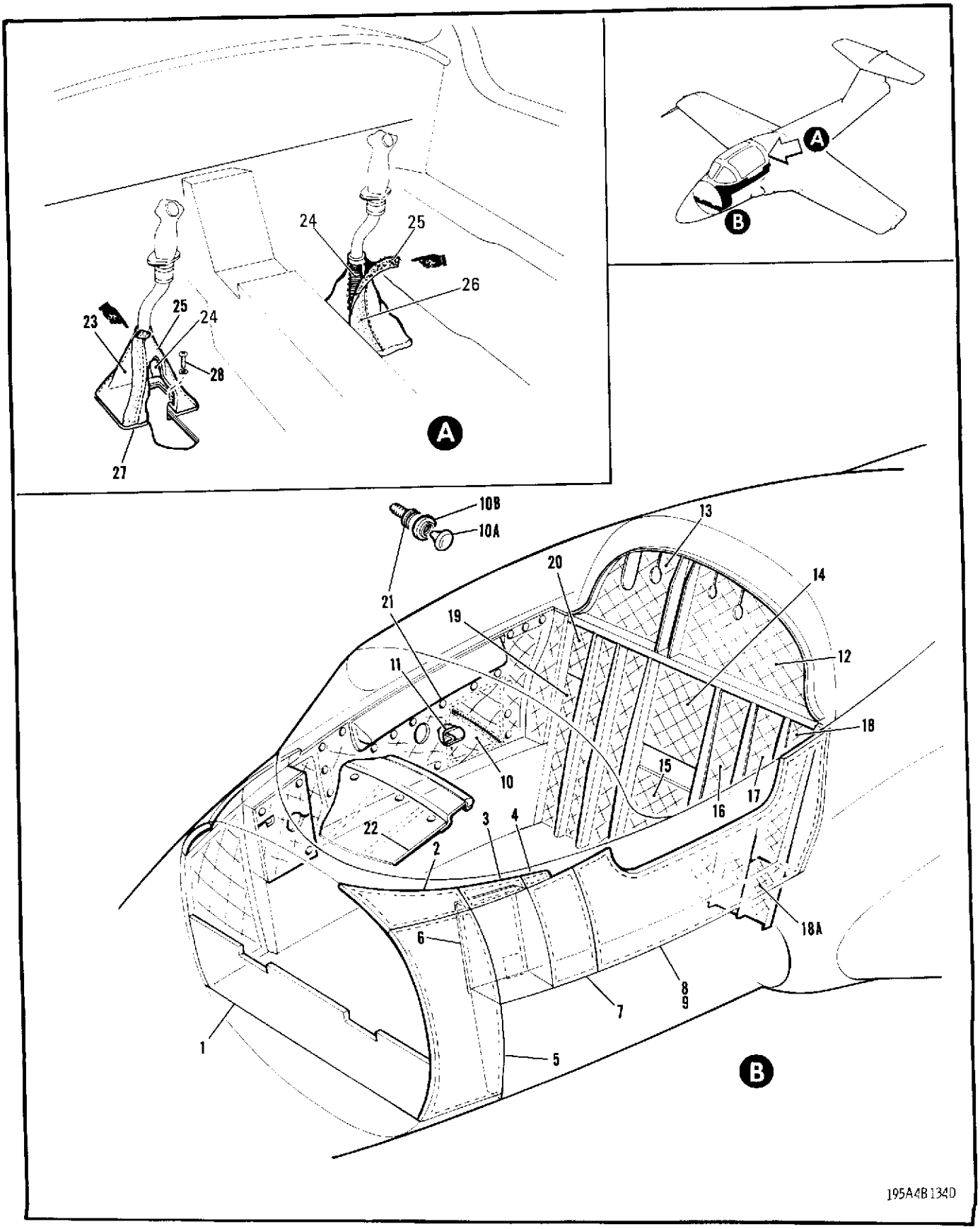

FIGURE 134 COCKPIT LINING & TRIM

	FIGURE AND INDEX NUMBER	GROUP		FURNISHINGS EQUIPMENT	EFFEC-TIVITY	UNITS PER ASSY
		MAJOR ASSEMBLY		COCKPIT LINING & TRIM		
		PART NUMBER		1 2 3 4 5 6 7 NOMENCLATURE		
	134 -	41A-41550		LINING & TRIM INSTL - COCKPIT (SEE FIG.133)		NP
		41A-41550-44		.BLANKET ASSY - STA 149		1
	- 1	41A-41550-2		..BLANKET ASSY		1
		41A-41550-30		..VELCRO - HOOK		1
	- 2	41A-41550-4		.BLANKET ASSY - LH		1
		41A-41550-5		.BLANKET ASSY - RH		1
	- 3	41A-41550-56		.BLANKET ASSY - LH		1
		41A-41550-57		.BLANKET ASSY - RH		1
	- 4	41A-41550-58		.BLANKET ASSY - LH		1
		41A-41550-59		.BLANKET ASSY - RH		1
	- 5	41A-41550-6		.BLANKET ASSY - LH		1
		41A-41550-7		.BLANKET ASSY - RH		1
	- 6	41A-41550-46		.BLANKET ASSY - LH		1
		41A-41550-47		.BLANKET ASSY - RH		1
		XX10129A8-777		..BUTTON - (V09736)		4
		XB10224K1105		..SOCKET - (V09736)		4
	- 7	41A-41550-40		.BLANKET ASSY - LH		1
		41A-41550-41		.BLANKET ASSY - RH		1
	- 8	41A-41550-70		.BLANKET ASSY - LH		1
		41A-41550-49		.BLANKET ASSY - RH		1
	- 9	41A-41550-10		..BLANKET ASSY - LH		1
	-10	41A-41550-11		..BLANKET ASSY - RH		1
		41A-41550-30		..VELCRO - HOOK		1
R	-10A	XX10129A8-777		..BUTTON - (V09736)		20
R	-10B	XB10224K1105		..SOCKET - (V09736)		20
	-11	41A-41550-60		..POCKET		1
		AN229-2AS32-II		..FASTENER - (LH)		1
		AN229-2AS43-II		..FASTENER - (RH)		1
	-12	41A-41550-16		.BLANKET ASSY - LH		1
	-13	41A-41550-84		.BLANKET ASSY - RH		1
	-14	41A-41550-18		.BLANKET ASSY - (REAR BULKHEAD)		1
	-15	41A-41550-62		.BLANKET ASSY - (REAR BULKHEAD)		1
	-16	41A-41550-22		.BLANKET ASSY - LH		1
		41A-41550-23		.BLANKET ASSY - RH		1
	-17	41A-41550-24		.BLANKET ASSY - LH		1
		41A-41550-25		.BLANKET ASSY - RH		1
	-18	41A-41550-26		.BLANKET ASSY - LH		1
	-18A	41A-41550-80		.BLANKET ASSY - LH		1
	-19	41A-41550-27		.BLANKET ASSY - RH		1
	-20	41A-41550-64		.BLANKET ASSY - RH		1
R	-21	XX10376K1105		.STUD - (V09736)		42
R		D1068-064-1		.SPEED NUT - (V78533)		42
R		BS10412K1105		.EYELET - (V09736)		6
R		BS10370K1105		.STUD - (V09736)		6
		41A-41550-28		.VELCRO - PILE		1
		41A-41560		.SHROUD INSTL - REMOVABLE PANEL		NP
	-22	41A-41560-2		..SHROUD ASSY		1
		41A-41560-4		...VELCRO - PILE		1
R		XX10129A8-002		...BUTTON - (V09736)		9
R		XB10224K1105		...SOCKET - (V09736)		9
		41A-41560-3		..VELCRO - HOOK		1
	-23	41-41512-800		.BOOT ASSY - CONTROL COLUMN LH		1
		41-41512-801		.BOOT ASSY - CONTROL COLUMN RH		1
	-24	80-320	*	..FASTENER - VELCRO HOOK (1 IN X 12 IN)		4
	-25	80-320	*	..FASTENER - VELCRO PILE (1 IN X 12 IN)		4
	-26	NO NUMBER	*	..STRIP - LEATHER (1.50 IN X 12 IN)		4
		AN227-8		..STUD		2
		AN227-9		..EYELET		2
	-26	AN227-6		..BUTTON		2
	-26	AN227-7		..SOCKET		2
	-27	41A-41562		..GASKET - CONTROL COLUMN		1
	-28	AN509-10R10		.SCREW		22
				-OOO-		
			*	IAW C-12-114-000/CF-395		

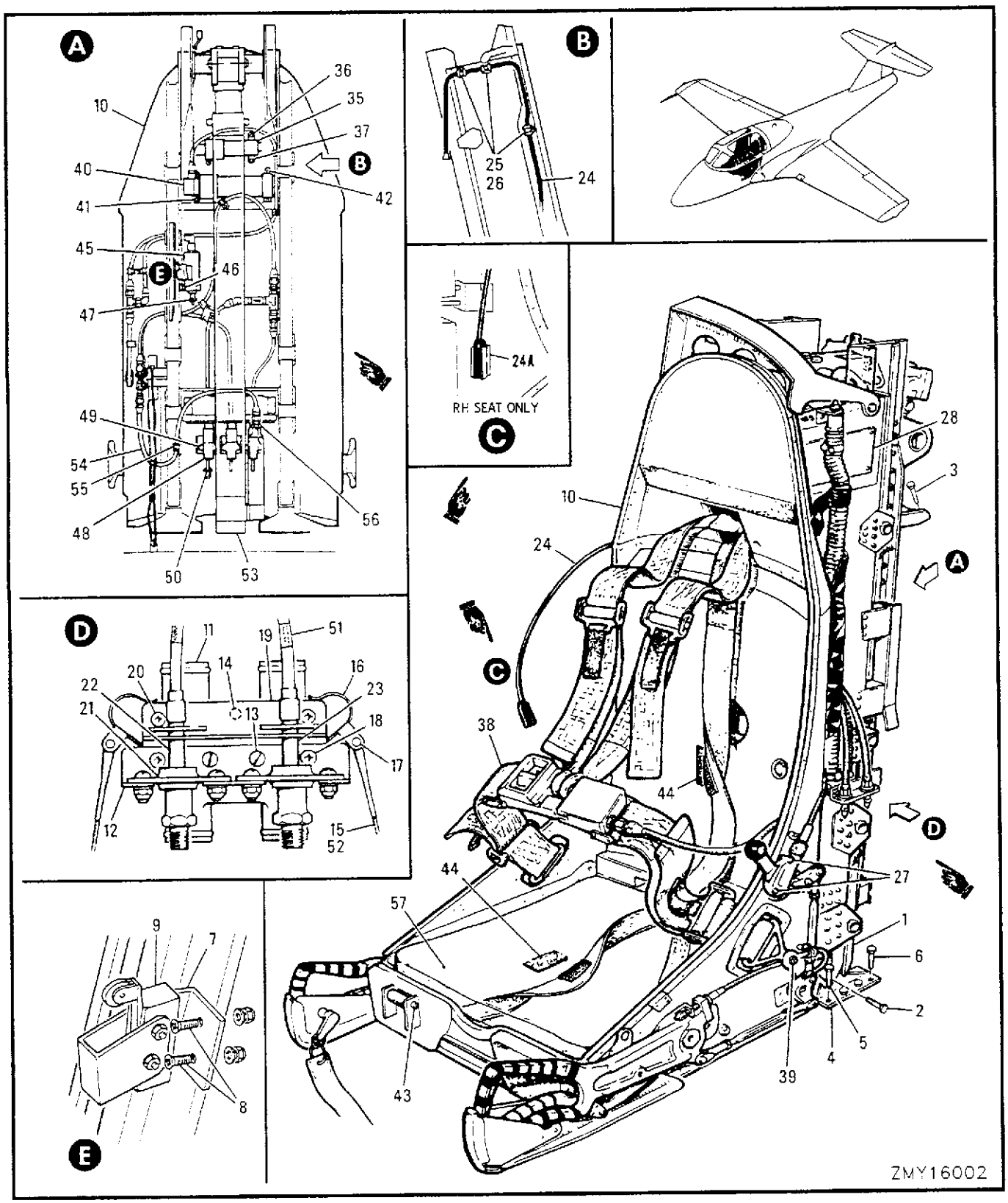

FIGURE 134A EJECTION SEATS

FIGURE AND INDEX NUMBER	GROUP	FURNISHINGS EQUIPMENT	EFFEC-TIVITY	UNITS PER ASSY
	MAJOR ASSEMBLY	EJECTION SEATS		
	PART NUMBER	1 2 3 4 5 6 7 NOMENCLATURE		
134A -	41A-40550-818	SEAT INSTL - PILOT LH		NP
	41A-40550-819	SEAT INSTL - PILOT RH		NP
- 1	W805829-802	.SEAT STRUCTURE ASSY - FIXED RAIL (SEE FIG. 135)		REF
- 2	NAS1205-8	.BOLT - (SEAT FIXED RAIL RETAINING)		2
	AN960D516	.WASHER		2
	MS21042L5	.NUT		2
- 3	NAS1106-7	.BOLT - (SEAT FIXED RAIL RETAINING)		2
	AN960D616	.WASHER		2
	41A-40550-13	.SHIM		AR
	MS21042-6	.NUT		2
- 4	41A-40554	.FITTING - SEAT SUPPORT LOWER (LH)		2
	41A-40554-1	.FITTING - SEAT SUPPORT LOWER (RH)		2
- 5	NAS1104-9	.BOLT		8
- 6	NAS1104-5	.BOLT		24
- 7	41A-40550-22	.BRACKET - SWITCH SUPPORT		1
- 8	MS24694-53	.SCREW		2
	AN960PD10	.WASHER		2
	MS21042L3	.NUT		2
	ADD3721R12 *	.ACTUATOR - (HOY)		1
- 9	DT2RA7 *	.SWITCH - (HOY) (S1SX,S2SX)		1
	41A-40552-820	.SEAT ASSY - EJECTION		1
	41A-40552-106	..SEAT ASSY - EJECTION		1
-10	W805832	...SEAT STRUCTURE ASSY - EJECTABLE (SEE FIG. 135A)		REF
	41A-40553-802	...DISCONNECT ASSY - SEAT		1
-11	41A-40556	....DISCONNECT - UPPER		1
	41A-40555	....DISCONNECT - LOWER		1
-12	W809084-3	....BRACKET - SEAT BALLISTIC LOWER DISCONN		1
-13	AN501A10-5	....SCREW		2
	AN960-10L	....WASHER		2
	AN6227B11	....PACKING		1
	AN6227B13	....PACKING		1
-14	AN565C2H3	....SETSCREW		1
-15	41-40515	....LANYARD ASSY		1
-16	41A-40515-6	.....CLIP		2
-17	MS20392-2C7	.....PIN		2
	MS24665-132	.....COTTER PIN		2
-18	NAS623-3-16	....SCREW		2
	NAS43DD3-10	....SPACER		2
	AN960-10L	....WASHER		2
	MS21042L3	....NUT		2
-19	W809081-800	...BRACKET - SEAT DISCONNECT UPPER		1
-20	NAS623-3-31	...SCREW		2
	NAS43DD3-16	...SPACER		2
	AN960-10	...WASHER		2
-21	4352D4	...SOCKET - (GTC)		2
-22	4026D4	...NIPPLE - (GTC)		1
-23	41A-40552-24	...NIPPLE		1
-24	41A-70266	...HARNESS ASSY - SEAT DISCONNECT TO HEADSET JACK		1
	U92A/U	....RECEPTACLE - (INITIATOR PHASE DISCONN)		1
	MS3107B14S5P	....PLUG		1
	MS3420-6	....BUSHING		1
	MS3057-6A	....CLAMP		1
-25	MS21919WDG5	...CLAMP		3
R -26	MS35206-244	...SCREW		3
	*	IAW C-12-114-000/CF-418		

FIGURE AND INDEX NUMBER	GROUP	FURNISHINGS EQUIPMENT	EFFEC-TIVITY	UNITS PER ASSY
	MAJOR ASSEMBLY	EJECTION SEATS		
	PART NUMBER	1 2 3 4 5 6 7 NOMENCLATURE		
134A -	AN960D8L	...WASHER		3
	MS21042L08	...NUT		3
-27	NAS623-3-10	...SCREW		2
	AN960-10L	...WASHER		2
	MS21042L3	...NUT		2
-28	S1395-1	...NAMEPLATE - (V88308)		1
R -29		DELETED		
R -30		DELETED		
R		DELETED		
R		DELETED		
R -31		DELETED		
R		DELETED		
R		DELETED		
R		DELETED		
R		DELETED		
R		DELETED		
R		DELETED		
R		DELETED		
R -32		DELETED		
R		DELETED		
R		DELETED		
R		DELETED		
R -33		DELETED		
R		DELETED		
R		DELETED		
R		DELETED		
R		DELETED		
R -34		DELETED		
R		DELETED		
R		DELETED		
-35	0106940-1	..INERTIA REEL & HARNESS ASSY - (PSC)		1
		OR		
	0106925-3	..INERTIA REEL & HARNESS ASSY - (PSC) (MOD)		
-36	NAS623-3-48	..SCREW		1
-37	NAS623-3-18	..SCREW		3
	NAS43DD3-48	..SPACER		4
	AN960-10	..WASHER		4
	MS21042L3	..NUT		4
-38	2297-13GM	..LAP BELT - AUTOMATIC RP1		1
-39	NAS623-4-11	..SCREW		2
	NAS43DD4-16	..SPACER		2
	AN960-416	..WASHER		2
	22K1-048	..NUT - (ESN)		2
-40	1000-24	..ACTUATOR - (TAE) (ROTARY)		1
-41	NAS6603-4	..BOLT		2
	AN960-10L	..WASHER		2
-42	NAS6603-5	..BOLT		2
	AN960-10L	..WASHER		2
-43	NAS623-3-36	..SCREW		2
	AN960-10L	..WASHER		2
-44	8315-21-820-5670	..VELCRO - PILE		1
	8315-21-820-0326	..VELCRO - HOOK		1
-45	F8595409	..INITIATOR - CARTRIDGE ACTUATED M32 (CNB)		1
-46	NAS623-4-6	..SCREW		2
	AN960-416	..WASHER		2
-47	MS20392-2C7	..PIN		1
	AN960PD10L	..WASHER		3
	MS24665-130	..COTTER PIN		1
-48	10520550	..INITIATOR - CARTRIDGE ACTUATED M27 (CNB)		3

FIGURE AND INDEX NUMBER	GROUP	FURNISHINGS EQUIPMENT	EFFEC-TIVITY	UNITS PER ASSY
	MAJOR ASSEMBLY	EJECTION SEATS		
	PART NUMBER	1 2 3 4 5 6 7 NOMENCLATURE		
134A -49	NAS623-3-12	..SCREW		6
	NAS43DD3-32	..SPACER		6
	AN960-10L	..WASHER		6
	MS21042L3	..NUT		6
-50	MS20392-2C13	..PIN		3
	MS24665-130	..COTTER PIN		3
-51	RCAFL85	..DECAL		1
-52	41A-40550-30	.CASING		1
-53	2400-14	.CATAPULT - ROCKET (TAE)		1
-54	R3800-4-0350	.HOSE ASSY - (RSS)		1
R -55	MS21919WDG5	.CLAMP		1
	NAS623-3-3	.SCREW		1
	AN960PD10	.WASHER		1
	MS21042L3	.NUT		1
-56	AN815-4	.UNION		1
	MS28778-4	.PACKING		1
	9320-21-807-2984	SHEET - RUBBER		AR
	8135-21-805-9886	TAPE - WATER RESISTANT		AR
-57	NO NUMBER	SURVIVAL KIT SEAT PACK - SEE C-22-109-000/MF-000		1

-OOO-

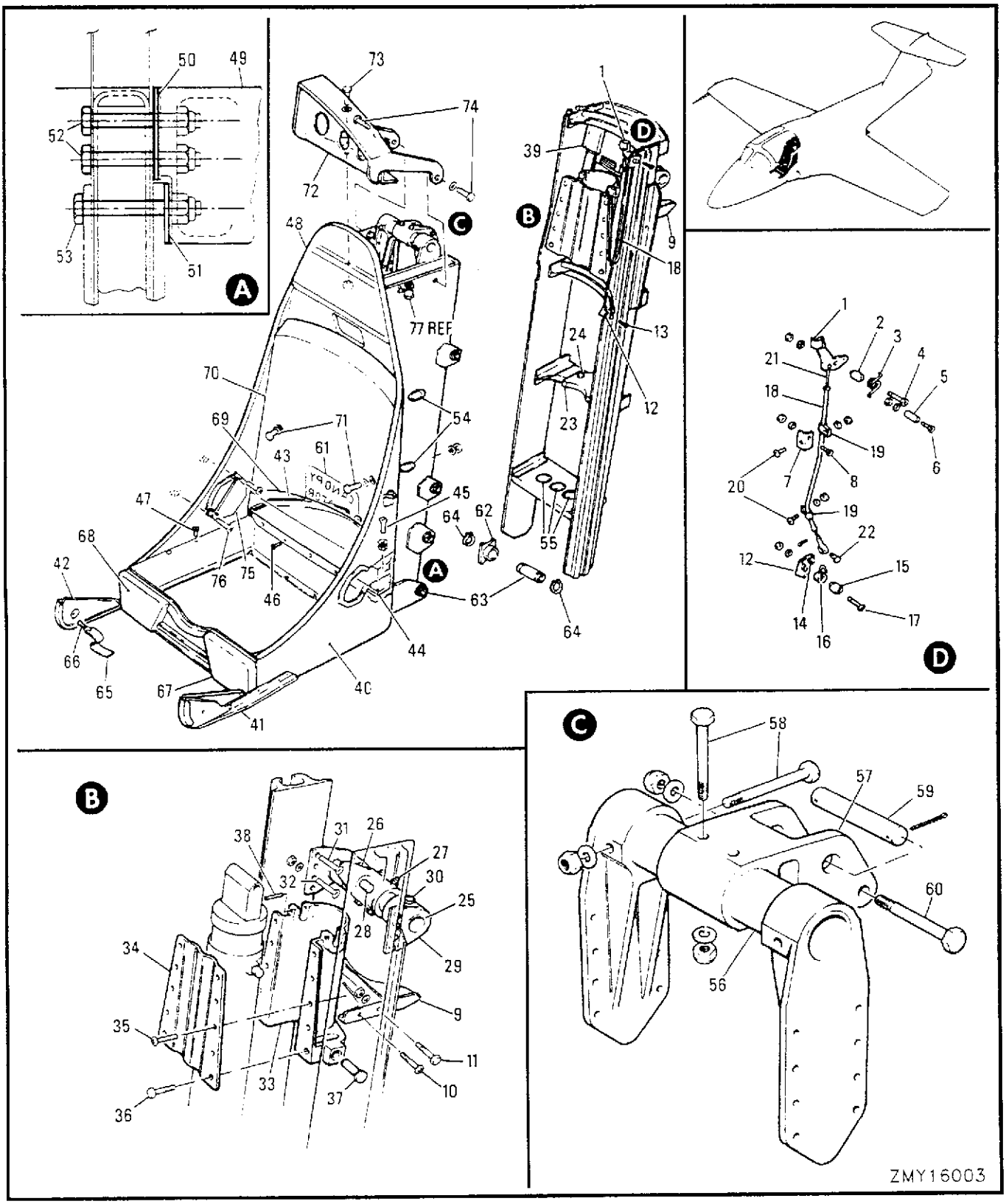

FIGURE 135 EJECTION SEATS

FIGURE AND INDEX NUMBER	GROUP	FURNISHINGS EQUIPMENT	EFFEC-TIVITY	UNITS PER ASSY
	MAJOR ASSEMBLY	EJECTION SEATS		
	PART NUMBER	1 2 3 4 5 6 7 NOMENCLATURE		
135 -	W805829-802	SEAT STRUCTURE ASSY - FIXED RAIL (SEE FIG. 134A)		2
	W805839-401	.LEVER ASSY		1
- 1	W805839-201	..LEVER ASSY - (RIVETED)		1
	AN565D1032H4	..SETSCREW - (CABLE LOCK)		1
- 2	W805861-3	.PIVOT		1
- 3	W805888-3	.SPRING		1
- 4	MS24694-62	.SCREW		1
	AN960PD10	.WASHER		1
	MS21042L3	.NUT		1
- 5	NAS42DD5-45	.SPACER		1
- 6	MS24693-55	.SCREW		1
	AN960PD8L	.WASHER		1
	MS21042L3	.NUT		1
- 7	W805859-4	.CLIP		1
- 8	MS24694-53	.SCREW		1
	AN960PD10	.WASHER		1
	MS21042L3	.NUT		1
- 9	W809077-3	.SUPPORT - UPPER TRACK		1
	W805829-9	.SHIM		AR
-10	NAS1204-5	.SCREW		2
-11	AN4-7A	.BOLT		2
	AN960PD416	.WASHER		8
	MS21042L4	.NUT		4
	W809073-800	.LATCH ASSY - INITIATOR		1
-12	W805824-5	..LATCH - INITIATOR		1
-13	AN3-3	..BOLT		1
	MS21042L3	..NUT		1
-14	NAS623-3-2	.SCREW		1
	AN960PD10L	.WASHER		AR
	MS21042L3	.NUT		1
-15	W805861-5	.PIVOT		1
-16	W805842-3	.SPRING - LATCH		1
-17	NAS1203-14	.SCREW		1
	AN960PD10	.WASHER		1
	MS21042L3	.NUT		1
-18	W809075-5	.TUBE - CABLE GUIDE		1
-19	AN742-3	.CLAMP		2
-20	AN23-8A	.BOLT		2
	AN960PD10	.WASHER		2
	MS21042L3	.NUT		2
-21	W809072-401	.CABLE ASSY		1
-22	MS20392-2C9	.PIN		1
	MS24665-150	.COTTER PIN		1
-23	W805893-3	.STOP		1
-24	AN3-7A	.BOLT		3
	AN960PD10	.WASHER		3
	MS21042L3	.NUT		3
	W805829-5	.SUPPORT ASSY		1
-25	W809060-3	..TUBE - ACTUATOR SUPPORT		1
-26	W809059-3	..FITTING - ACTUATOR SUPP		1
-27	NAS464P5LA32	..BOLT		2
	AN960PD516	..WASHER		2
	MS21042L5	..NUT		2
-28	W809076-3	..PIN - ACTUATOR ATT		1
-29	W809058-3	..FITTING - TUBE SUP. LH		1
	W809058-4	..FITTING - TUBE SUP. RH		1
-30	NAS464P5LA32	..BOLT		2
	AN960PD516	..WASHER		2
	MS21042L5	..NUT		2
-31	NAS1203-7	.SCREW		4
-32	NAS1203-9	.SCREW		4
	AN960PD10	.WASHER		8
	MS21042L3	.NUT		8

FIGURE AND INDEX NUMBER	GROUP	FURNISHINGS EQUIPMENT	EFFEC-TIVITY	UNITS PER ASSY
	MAJOR ASSEMBLY	EJECTION SEATS		
	PART NUMBER	1 2 3 4 5 6 7 NOMENCLATURE		
135 -	W805829-7	.SUPPORT ASSY		1
-33	W809061-401	..SUPPORT		1
-34	W809062-3	..COVER - TRUNNION		1
-35	MS27039-1-08	..SCREW		8
-36	AN3H4A	..BOLT		2
-37	MS20392-5C39	..PIN		2
	MS24665-140	..COTTER PIN		2
-38	W809079-3	..SCREW		2
R -39	R5164M1	.ACTUATOR - (V36123) (LINEAR) (AS PER W808928) FOR BKDN SEE C-13-D69-000/MS-000		1
	W805832-814	SEAT STRUCTURE ASSY - EJECTABLE (SEE FIG. 135A)		1
	W805836-806	.CONTROL INSTL - EJECTION & SEAT ADJUSTMENT (SEE FIG. 135B)		REF
	W805843-804	.BALLISTIC INSTL - (SEE FIG. 135A)		REF
	W805835-810	.BUCKET ASSY - EJECTION SEAT		1
-40	W805835-205	..FRAME ASSY - SEAT		1
-41	W805947-401	..GUARD ASSY - LEG LH (RIVETED)		1
-42	W805947-402	..GUARD ASSY - LEG RH (RIVETED)		1
-43	W805915-3	..SHELF - PARACHUTE		1
-44	W805835-5	..BLOCK - PARACHUTE SHELF LH		1
	W805835-6	..BLOCK - PARACHUTE SHELF RH		1
-45	AN507-832R16	..SCREW		2
	AN960-8	..WASHER		2
	MS21042L08	..NUT		2
-46	MS27039-1-07	..SCREW		6
	MS27039-1-06	..SCREW		5
	AN960-10L	..WASHER		11
-47	MS27039-1-12	..SCREW - (THROUGH LINER)		4
-48	W805878-3	..PAD - HEADREST		1
-49	W809069-3	..PAD - ROCKET THRUST		1
-50	W805835-7	..SHIM		2
-51	W805835-9	..SHIM		2
-52	AN3-15A	..BOLT		12
-53	AN3-16A	..BOLT		4
	AN960-10L	..WASHER		16
	MS21042L3	..NUT		16
	W805838-810	..STIFFENER ASSY		1
-54	MS35489-22	...GROMMET		4
-55	MS35489-17	...GROMMET		5
	W809065-401	...BEAM ASSY - ROCKET ATTACHMENT		1
-56	W809064-3	....BEAM - ROCKET FITTING ATTACHMENT		1
-57	W809063-3	....FITTING - ROCKET ATTACHMENT		1
-58	NAS464P6LA32	....BOLT		4
	AN960-616	....WASHER		4
	MS20364-624	....NUT		4
-59	W809078-3	...PIN - ROCKET ATTACHMENT		1
	AN960PD816L	...WASHER		2
	MS24665-285	...COTTER PIN		2
-60	AN5-26A	...BOLT		1
	AN960PD516L	...WASHER		2
	MS21042L5	...NUT		1
-61	W805974-3	...NAMEPLATE - (CANOPY INITIATOR)		1
-62	W805884-3	.BLOCK - SLIDE		8
-63	W805882-3	.SHAFT		8
-64	MS16624-68	.RING		16
	W805865-401	.STREAMER ASSY		1
-65	W805865-201	..STREAMER		1
	14	..KEY RING - (PAS)		1
	8	..KEY RING - (PAS)		1
-66	NAS1334A5S1.3	..PIN		1
-67	W805950-4	.PAD - LEGREST LH		1
-68	W805950-3	.PAD - LEGREST RH		1

FIGURE AND INDEX NUMBER	GROUP	FURNISHINGS EQUIPMENT	EFFEC-TIVITY	UNITS PER ASSY
	MAJOR ASSEMBLY	EJECTION SEATS		
	PART NUMBER	1 2 3 4 5 6 7 NOMENCLATURE		
135 -	41A-42200	COCKPIT EQUIP. INSTL - (SEE FIG. 133)		REF
-69	41A-00010-90	.BLOCK - PARACHUTE SHELF FILLER		2
-70	41A-00010-89 *	.BLOCK - SEAT BACK FILLER (G.S.M.)		2
-71	AN3-13A	.BOLT		4
	AN970-3	.WASHER		4
	MS21042L3	.NUT		4
	41A-40550-818	SEAT INSTL - PILOT (SEE FIG. 134A)		REF
-72	41A-40568-2	.PENETRATOR ASSY - CANOPYLH		1
	41A-40568-3	.PENETRATOR ASSY - CANOPYRH		1
-73	NAS501-3-6A	.BOLT		1
	AN960PD10	.WASHER		3
	MS21042L3	.NUT		1
-74	S1384-4A4	.BOLT - (V88308)		2
	AN960PD10	.WASHER		2
	MS21042L3	.NUT		2
-75	9535-21-813-8521	SHIELD - (RH SIDE OF SEAT)		1
R -76	MS35206-242	SCREW		2
	AN960-8L	WASHER		2
	MS21042L08	NUT		2
-77	AE409-5A	PLUG - OXYGEN STOWAGE (SEE SECTION 11)		REF
		-OOO-		
	*	IAW C-22-166-000/CF-061		

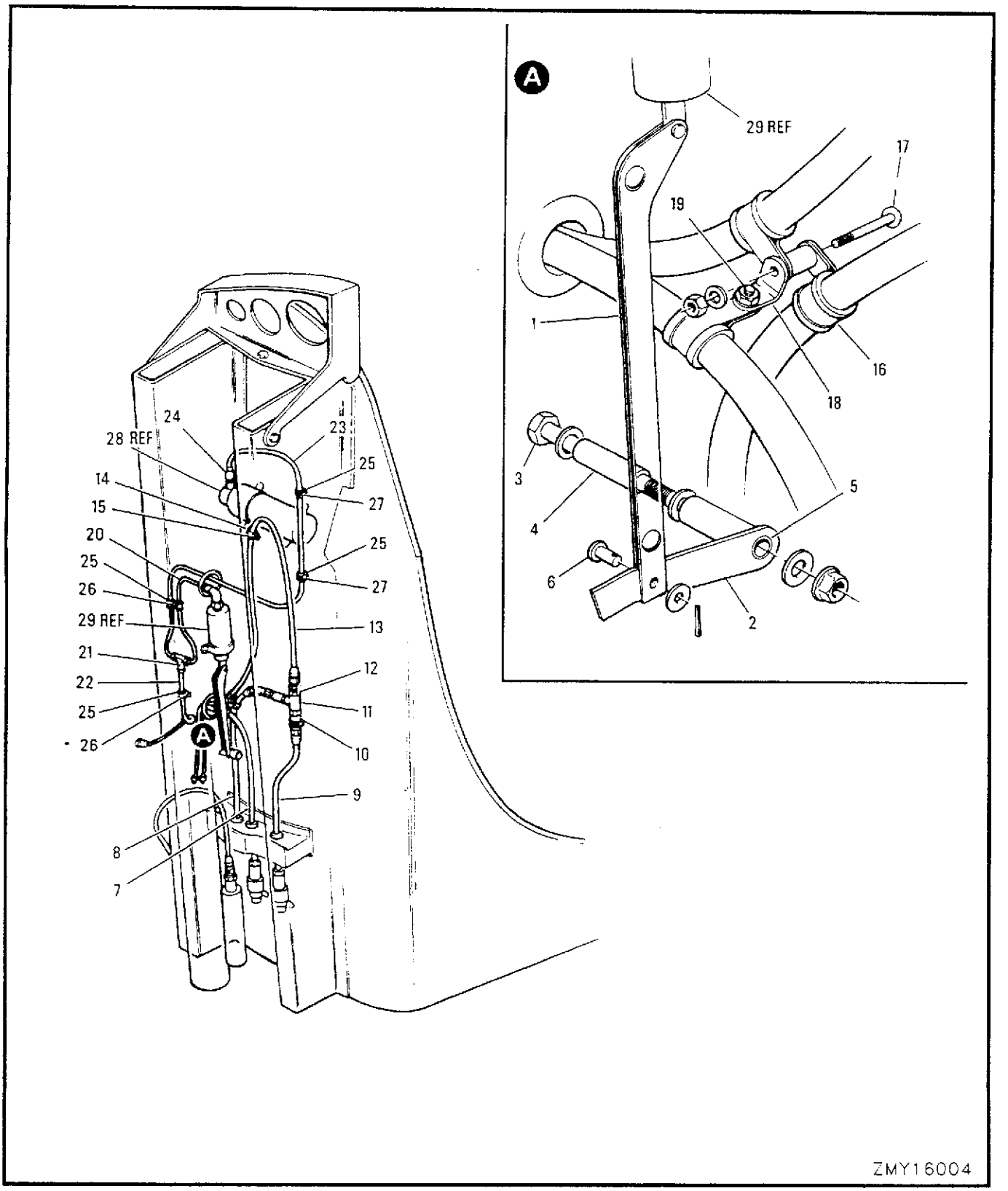

FIGURE 135A EJECTION SEAT BALLISTICS

	FIGURE AND INDEX NUMBER	GROUP	FURNISHINGS EQUIPMENT	EFFEC-TIVITY	UNITS PER ASSY
		MAJOR ASSEMBLY	EJECTION SEAT BALLISTICS		
		PART NUMBER	1 2 3 4 5 6 7 NOMENCLATURE		
	135A -	W805832-814	SEAT STRUCTURE ASSY - EJECTABLE (SEE FIG. 135)		REF
		W805843-804	.BALLISTIC INSTL		NP
	- 1	W809074-401	..LINK ASSY - INITIATOR		1
	- 2	W809083-800	..LEVER ASSY - INITIATOR		1
	- 3	AN3-23A	..BOLT		1
		AN960PD10	..WASHER - (UNDER BOLT HEAD)		1
	- 4	NAS43DD3-60	..SPACER		1
	- 5	W805875-3	..SPACER		1
		AN960PD10L	..WASHER - (1 UNDER NUT & SHIM AS REQUIRED)		AR
		MS21042L3	..NUT		1
	- 6	MS20392-2C7	..PIN		1
		AN960PD10L	..WASHER		1
		MS24665-132	..COTTER PIN		1
R	- 7	R3800-4-0180	..HOSE ASSY - (V50999)		1
		W805966-2	..TAPE - (NORM-EMPTY EMER-HOT GAS ESCAPE)		2
		W805873-2	..TAPE - (HATCH REMOVAL)		2
		W805864-2	..TAPE - (CONNECT TO M27 INITIATOR)		1
		W805868-2	..TAPE - (CONN TO 4026D4 BALLISTIC NIPPLE)		1
R	- 8	R3805-4-0121	..HOSE ASSY - (V50999)		1
R	- 9	R3805-4-0084	..HOSE ASSY - (V50999)		1
		W805966-2	..TAPE - (NORM-EMPTY EMER-HOT GAS ESCAPE)		4
		W805874-2	..TAPE - (CATAPULT FIRING))		4
		W805864-2	..TAPE - (CONNECT TO M27 INITIATOR)		2
		W805927-2	..TAPE - (CONNECT TO AN6249)		2
	-10	AN6249-4	..VALVE		2
		MS28778-4	..PACKING		2
	-11	AN938-4	..TEE		1
	-12	AN815-4	..UNION		1
		MS28778-4	..PACKING		1
R	-13	R3800-4-0314	..HOSE ASSY - (V50999)		1
R	-14	MS21919WDG5	..CLAMP		1
	-15	NAS623-3-3	..SCREW		1
		AN960PD10	..WASHER		1
		MS21042L3	..NUT		1
R	-16	MS21919WDG5	..CLAMP		3
	-17	MS27039-1-15	..SCREW		1
		NAS43DD3-24	..SPACER		1
	-18	AN743-13	..BRACKET		1
	-19	NAS623-3-2	..SCREW		1
		AN960PD10	..WASHER		2
		MS21042L3	..NUT		2
		W805966-2	..TAPE - (NORM-EMPTY EMER-HOT GAS ESCAPE)		2
		W805874-2	..TAPE - (CATAPULT FIRING)		2
		W805959-2	..TAPE - (CONNECT TO AN938)		1
		W805960-2	..TAPE - (CONNECT TO M5 CATAPULT)		1
R	-20	R3806-4-0100	..HOSE ASSY - (V50999)		1
		W805966-2	..TAPE - (NORM-EMPTY EMER-HOT GAS ESCAPE)		2
		W805962-2	..TAPE - (SEAT-MAN SEPARATOR SYSTEM)		2
		W805961-2	..TAPE - (CONNECT TO M32 INITIATOR)		1
		W805963-2	..TAPE - (CONNECT TO AN824)		1
	-21	AN824-4	..TEE		1
R	-22	R5306-4-0244	..HOSE ASSY - (V50999)		1
		W805966-2	..TAPE - (NORM-EMPTY EMER-HOT GAS ESCAPE)		2
		W805971-2	..TAPE - (LAP BELT SYSTEM)		2
		W805963-2	..TAPE - (CONNECT TO AN824)		1
		W805972-2	..TAPE - (CONNECT TO MA6 LAP BELT)		1
R	-23	R3806-4-0367	..HOSE ASSY - (V50999)		1
		W805966-2	..TAPE - (NORM-EMPTY EMER-HOT GAS ESCAPE)		2
		W805962-2	..TAPE - (SEAT-MAN SEPARATOR SYSTEM)		2
		W805963-2	..TAPE - (CONNECT TO AN824)		1
		W805964-2	..TAPE -(CONNECT TO 1000-3 ROTARY ACTUATOR)		1
	-24	AN815-4	..UNION		1

FIGURE AND INDEX NUMBER	GROUP	FURNISHINGS EQUIPMENT	EFFEC-TIVITY	UNITS PER ASSY
	MAJOR ASSEMBLY	EJECTION SEAT BALLISTICS		
	PART NUMBER	1 2 3 4 5 6 7 NOMENCLATURE		
135A -	MS28778-4	..PACKING		1
R -25	MS21919WDG5	..CLAMP		5
-26	AN23-8A	..BOLT		2
-27	AN23-22A	..BOLT		2
	AN960PD10	..WASHER		4
	MS21042L3	..NUT		4
-28	1000-24	ACTUATOR - (ROTARY) (SEE FIG. 134A)		REF
-29	F8595409	INITIATOR - CARTRIDGE ACTUATED M32 (SEE FIG. 134A)		REF
		-000-		

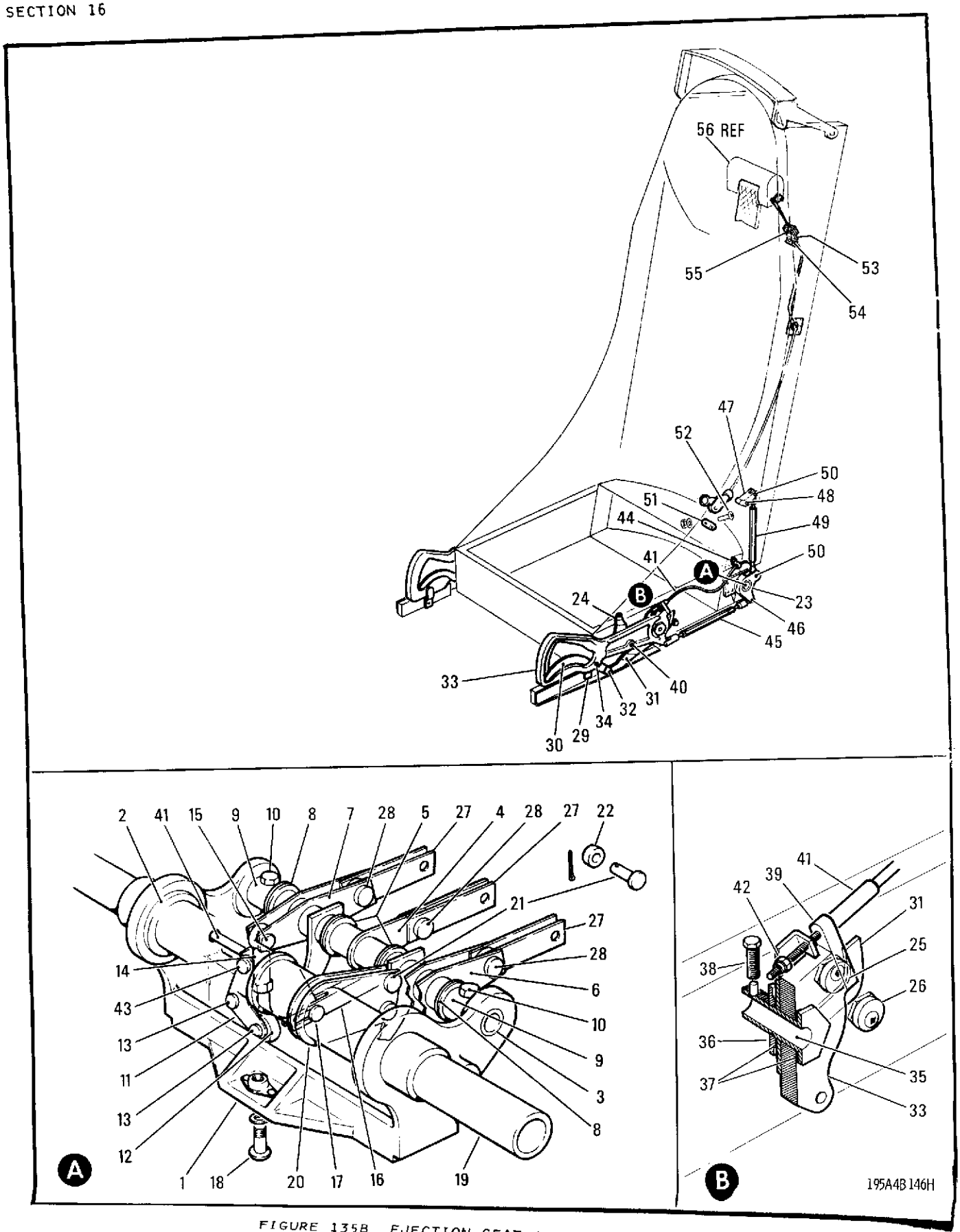

FIGURE 135B EJECTION SEAT CONTROL & ADJUSTMENT

FIGURE AND INDEX NUMBER	GROUP	FURNISHINGS EQUIPMENT	EFFEC-TIVITY	UNITS PER ASSY
	MAJOR ASSEMBLY	EJECTION SEAT CONTROL & ADJUSTMENT		
	PART NUMBER	1 2 3 4 5 6 7 NOMENCLATURE		
135B -	W805836-806	CONTROL INSTL - EJECTION & SEAT ADJUSTMENT (SEE FIG. 135)		NP
	W805924-401	.FIRING MECHANISM ASSY - INITIATOR		1
	W805925-401	..SUPPORT ASSY - BELLCRANK		1
- 1	W805925-3	...SUPPORT		1
- 2	FF1213-1	...BEARING - (KAY)		2
	NAS1222-6D	...INSERT		2
- 3	W805930-3	..SHAFT - BELLCRANK		1
- 4	W805938-401	..BELLCRANK		1
- 5	AN960PD816	..WASHER		4
- 6	W805933-800	..BELLCRANK		1
- 7	W805933-801	..BELLCRANK		1
- 8	AN960PD816	..WASHER		2
- 9	W805931-3	..SPACER		2
-10	AN3-10	..BOLT		2
	AN960PD10L	..WASHER		4
	MS21042L3	..NUT		2
-11	W805932-3	..TRIGGER - BELLCRANK		4
-12	TRE3	..ROD END - (SES)		2
-13	MS27039-1-04	..SCREW		4
	AN960PD10L	..WASHER		12
	MS21042L3	..NUT		4
-14	TR3	..ROD END - (SES)		2
-15	MS20392-2C17	..PIN		2
	AN960PD10L	..WASHER		2
	MS24665-130	..COTTER PIN		2
-16	W805928-3	..LINK - PRIMARY CANOPY INITIATOR		1
-17	MS20392-2C13	..PIN		1
	AN960PD10L	..WASHER		2
	MS24665-130	..COTTER PIN		1
-18	NAS1405-4	.SCREW		1
	NAS1405-5	.SCREW		2
	AN970-5	.WASHER		1
-19	W805942-3	.TUBE - REAR TORQUE		1
-20	W805926-401	.BELLCRANK - PRIMARY		1
	AN3-15	.BOLT		2
	AN960PD10L	.WASHER		2
	MS21042L3	.NUT		2
-21	MS20392-1C13	.PIN		5
-22	W805836-5	.SPACER		4
	AN960PD10L	.WASHER		4
	MS24665-130	.COTTER PIN		5
-23	W805955-5	.BELLCRANK - TORQUE TUBE REAR		2
	MS27039-4-26	.SCREW		2
	MS21042L4	.NUT		2
-24	W805879-3	.SPRING - LEG GUARD UPLOCK		2
-25	W805946-3	.BUTTON - ADJUSTABLE TRIGGER		2
	MS24694-6	.SCREW		2
-26	W805946-5	.BUTTON - ADJUSTABLE TRIGGER		2
	AN220-11	.SCREW		2
-27	W805929-3	.LINK - INITIATOR BELLCRANK		6
-28	MS20392-2C9	.PIN		1
	MS20392-2C13	.PIN		2
	MS24665-130	.COTTER PIN		3
-29	W805877-5	.SPRING - LEG GUARD DOWNLOCK		2
-30	W805923-800	.TRIGGER ASSY - LH LEG GUARD		1
	W805923-801	.TRIGGER ASSY - RH LEG GUARD		1
-31	W805936-3	.LINK - LH TRIGGER		1
	W805936-4	.LINK - RH TRIGGER		1
-32	MS20392-1C13	.PIN		2
	MS24665-132	.COTTER PIN		2
-33	W805918-401	.LEG GUARD ASSY - LH		1
	W805918-402	.LEG GUARD ASSY - RH		1

FIGURE AND INDEX NUMBER	GROUP	FURNISHINGS EQUIPMENT	EFFEC-TIVITY	UNITS PER ASSY
	MAJOR ASSEMBLY	EJECTION SEAT CONTROL & ADJUSTMENT		
	PART NUMBER	1 2 3 4 5 6 7 NOMENCLATURE		
135B -	MS21209C0815	..INSERT		3
-34	MS24694-6	.SCREW		1
-35	W805943-3	.HUB		2
-36	W805958-3	.SPACER - LEG GUARD STAND OFF		2
-37	W805953-3	.WASHER		4
	W805849-1	.PLUG		2
-38	LP62V040H16	.SETSCREW - (LOL)		2
	S1246SR13-14-250	.WASHER - (UNDER HEAD OF SETSCREW)		2
-39	W805949-3	.BLOCK - LEG GUARD CABLE		2
	MS27039-08-11	.SCREW		4
-40	NAS561-10-13	.PIN		2
-41	3002-3	.CABLE ASSY - (CSO)		2
-42	MS21042L08	.NUT		2
-43	MS20392-1C15	.PIN		2
	MS24665-130	.COTTER PIN		2
R -44	MS21919WDG5	.CLAMP		2
R	MS35207-266	.SCREW		2
	NAS43DD3-32	.SPACER		2
	AN960PD10	.WASHER		2
	MS21042L3	.NUT		2
-45	W805951-800	.LINK ASSY - PRE EJECTION CONTROL		2
	W805951-10	..LINK		1
	AN665-34L	..TERMINAL		1
	NAS509L4	..NUT		1
	AN665-34R	..TERMINAL		1
	NAS509R4	..NUT		1
-46	MS20392-3C15	.PIN		4
	MS24665-132	.COTTER PIN		4
-47	W805956-3	.BELLCRANK - INERTIA REEL ACTUATING		1
-48	MS27039-1-16	.SCREW		1
	NAS43DD3-34	.SPACER		1
	AN960-10	.WASHER		2
	MS21042L3	.NUT		1
-49	W805952-401	.LINK ASSY - INERTIA REEL LOCK		1
	W805952-3	..LINK		1
	AN665-21L	..TERMINAL		1
	W805952-6	..NUT		1
	AN665-21R	..TERMINAL		1
	W805952-5	..NUT		1
-50	MS20392-2C17	.PIN		2
	MS24665-132	.COTTER PIN		2
-51	S1228-4	.TAB - (V88308)		1
-52	MS27039-1-07	.SCREW		1
	AN960PD10	.WASHER		1
	MS21042L3	.NUT		1
-53	W805968-12	.CLIP		1
-54	AN3-4	.BOLT		2
	AN960PD10L	.WASHER		2
	MS21042L3	.NUT		2
-55	NAS623-3-10	.SCREW		2
	AN960PD10	.WASHER		2
	MS21042L3	.NUT		2
-56	41A-00010-103	INERTIA REEL & HARNESS ASSY-(SEE FIG. 134A)		REF

-OOO-

SECTION 17

LOOSE EQUIPMENT

TABLE OF CONTENTS

FIGURE	TITLE	PAGE
135C	PROBE COVER, LOCK & RELEASE PINS	17-02
135D	SEAT & CANOPY SAFETY PINS	17-04

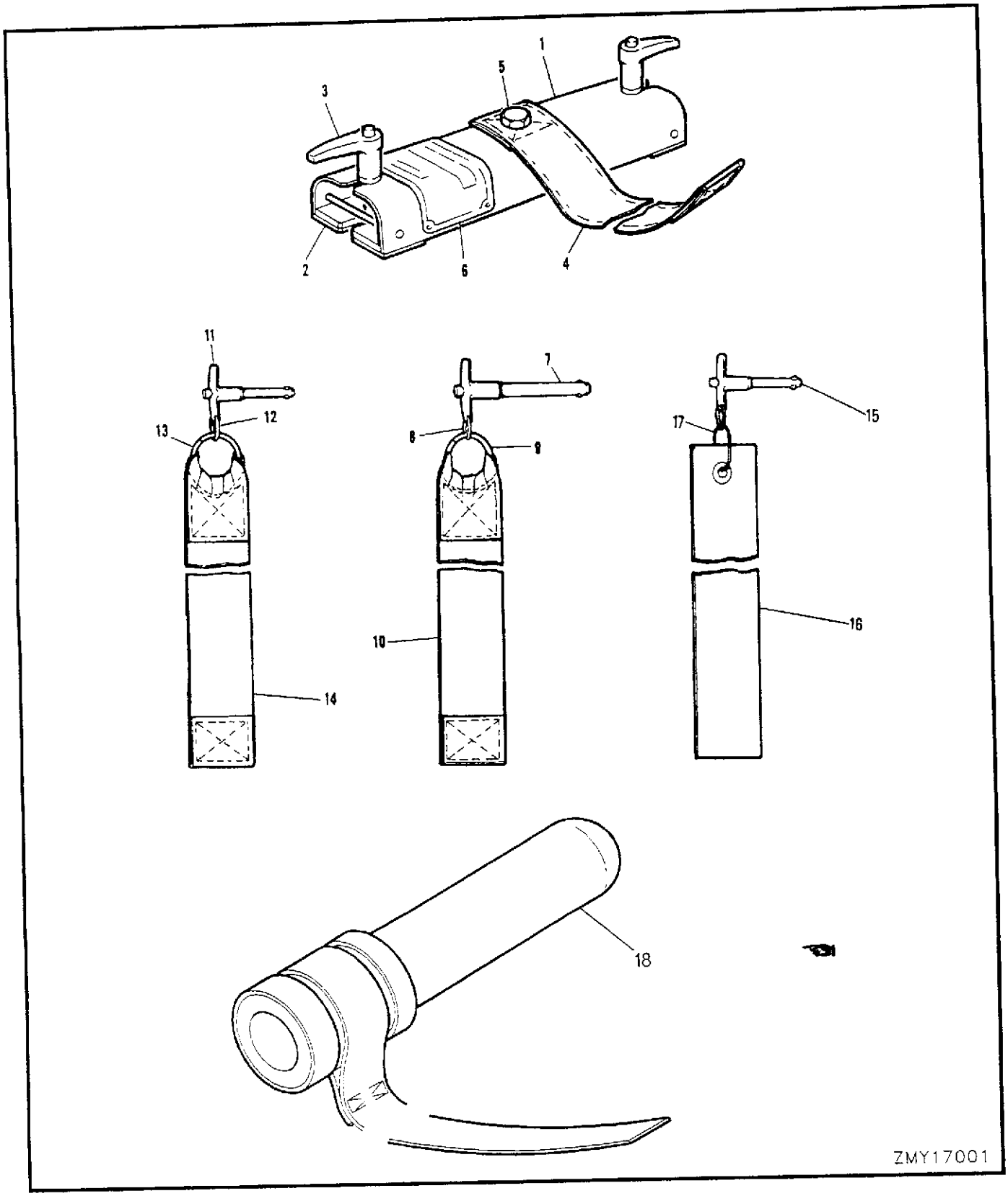

FIGURE 135C PROBE COVER, LOCK & RELEASE PINS

FIGURE AND INDEX NUMBER	GROUP	LOOSE EQUIPMENT	EFFEC-TIVITY	UNITS PER ASSY
	MAJOR ASSEMBLY	PROBE COVER, LOCK & RELEASE PINS		
	PART NUMBER	1 2 3 4 5 6 7 NOMENCLATURE		
135C -	41A-40200	LOOSE EQUIPMENT INSTL - (SEE FIG. 1)		NP
	555794-1	.COVER ASSY - STALL WARNING PROBE (CANADAIR 41-323-012)		1
- 1	360308-1	..WELD ASSY - STALL WARNING PROBE COVER		1
- 2	41-323-012-6	..PAD - RUBBER		1
- 3	265196-1	..PIN ASSY - LOCK		2
	NAS1334A5S12D	...PIN		1
	41-323-012-18	...COLLAR		1
- 4	NAS1089-24	..STREAMER		1
- 5	AN4-5A	..BOLT		1
	MS21042L4	..NUT		1
	AN316-4R	..NUT		1
- 6	265200-1	..NAMEPLATE - (MAKE FROM RCAF NO. 22368)		1
	456680-1	.PIN ASSY - MAIN LANDING GEAR LOCK (CANADAIR 41-333-003)		2
	456684-1	..PIN ASSY		1
- 7	NAS1336A2S24	...PIN		1
- 8	41-333-003-4	...RING		1
- 9	8432-1-1/2	..RING - (PAS)		1
-10	456685-1	..STREAMER ASSY		1
	456681-1	.PIN ASSY - NOSE LANDING GEAR LOCK (CANADAIR 41-333-002)		1
	456682-1	..PIN ASSY		1
-11	NAS1334A2S13	...PIN		1
-12	41-333-002-4	...RING		1
-13	8432-1-1/2	..RING - (PAS)		1
-14	456678-1	..STREAMER ASSY		1
	41-333-018 *	PIN ASSY - GROUND SAFETY (BOMB RACK)		2
-15	NAS1354DC2C47	.PIN - QUICK RELEASE		1
-16	28-27129-2	.STREAMER		1
	MS20230B2	.GROMMET		1
-17	28-27129-4	.RING		1
R -18	9040243-1	COVER ASSY - PITOT TUBE (V36376) (MANUFACTURE LOCALLY IAW C-12-114/CS-065)		1
R	9040244-1	.TUBE (V36376)		1
R	9040245-1	.CAP ASSY (V36376)		1
R	9040246-1	.SPLIT RING (V36376)		1
R	9040247-1	.STREAMER (V36376)		1
		-OOO-		
	*	AS PER C-12-114-000/CD-031		

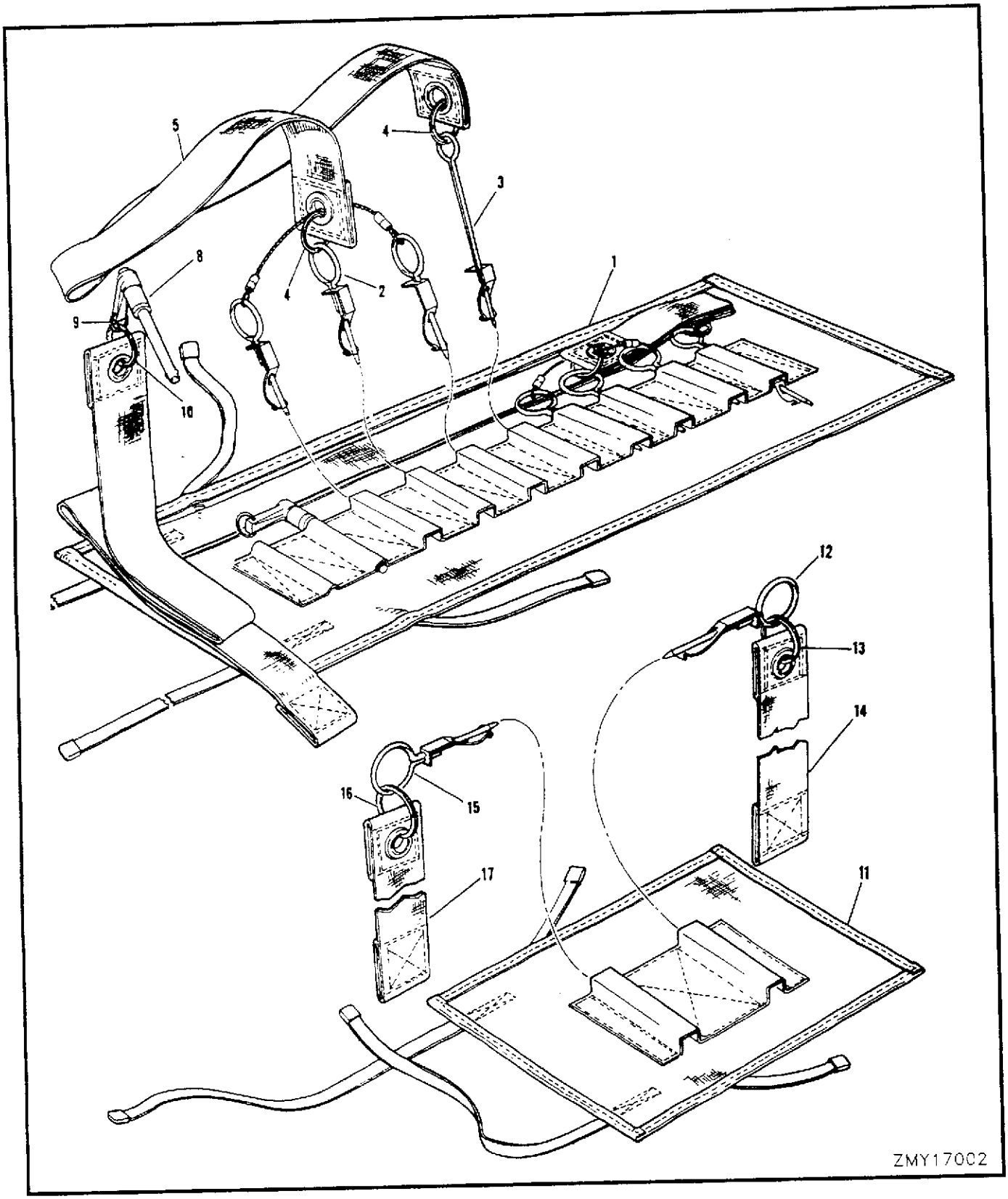

FIGURE 135D SEAT & CANOPY SAFETY PINS

FIGURE AND INDEX NUMBER	GROUP / MAJOR ASSEMBLY / PART NUMBER	LOOSE EQUIPMENT / SEAT & CANOPY SAFETY PINS / 1 2 3 4 5 6 7 NOMENCLATURE	EFFEC-TIVITY	UNITS PER ASSY
135D -	41A-40200	LOOSE EQUIPMENT INSTL - (SEE FIG. 135C)		REF
	555876-1	.KIT - SEAT EJECTION SYSTEM SAFETY PINS (CANADAIR 41-333-013)		1
- 1	602293-1	..CASE ASSY - SEAT EJECTION SAFETY PINS (CANADAIR 41-333-013-2)		1
	555748-1	..PIN ASSY - SEAT INITIATOR (CANADAIR 41-333-015-3)		2
- 2	602282-1	...PIN ASSY - (CANADAIR 41-333-016-1)		1
- 3	602282-2	...PIN ASSY - (CANADAIR 41-333-016-2)		1
- 4	6805-1-1/4	...RING - (CAU)		2
- 5	160563-7	...STREAMER ASSY - (CANADAIR 41-333-015-12)		1
R	NO NUMBER	...VELCRO - (V12288) (PILE 2 IN. X 3 IN.E (AS PER C-12-114-00/CF-295)		2
- 6		DELETED		
- 7		DELETED		
	555861-1	..PIN ASSY - LEG GUARD (CANADAIR 41-333-015-4)		2
- 8	NAS1334A5S1.3	...PIN		1
- 9	247-5/8	...RING - (CAU)		1
-10	6805-1-1/4	...RING - (CAU)		1
	160563-4	...STREAMER ASSY - (CANADAIR 41-333-015-13)		1
	555877-1	.KIT - CANOPY RELEASE SYSTEM SAFETY PINS (CANADAIR 41-333-014)		1
-11	602294-1	..CASE ASSY - CANOPY RELEASE SAFETY PINS (CANADAIR 41-333-014-2)		1
	555749-1	..PIN ASSY - CANOPY CATAPULT (CANADAIR 41-333-015-5)		1
-12	602282-3	...PIN ASSY - (CANADAIR 41-333-016-3)		1
-13	6805-1-1/4	...RING - (CAU)		1
-14	160563-5	...STREAMER ASSY - (CANADAIR 41-333-015-14)		1
	555750-1	..PIN ASSY - CANOPY EMERGENCY JETTISON (CANADAIR 41-333-015-6)		1
-15	602282-4	...PIN ASSY - (CANADAIR 41-333-016-4)		1
-16	6805-1-1/4	...RING - (CAU)		1
-17	160563-6	...STREAMER ASSY - (CANADAIR 41-333-015-15)		1

-OOO-

PART 3

SPECIAL SERVICE TOOL LIST

TABLE OF CONTENTS

FIGURE	TITLE	PAGE
136	TOW BAR, BRIDLE & TETHER CABLE	2
137	DELETED	4
138	ENGINE FLOOR STAND & SLINGS	6
139	RIG PINS, INITIATOR DUMMY & GAUGES	10
140	FLAP, AILERON & AILERON SPRING TAB RIG BOARD	14
141	RIGGING PINS	16
142	SPECIAL TOOLS & ADAPTERS	20
143	CANOPY STRUT, DUMMY CATAPULT & INITIATOR	24
144	BLANKING PLUGS	26

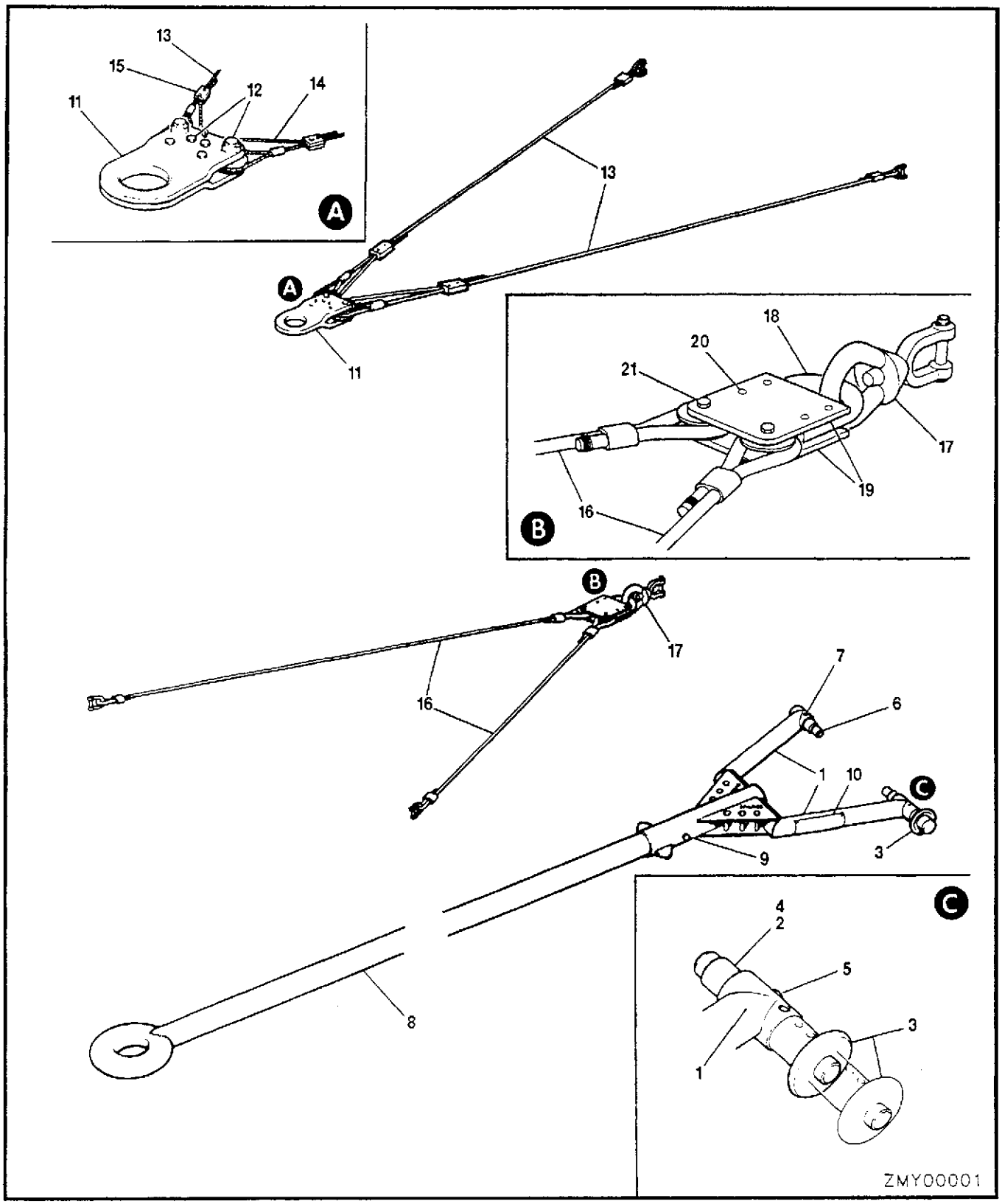

FIGURE 136 TOW BAR, BRIDLE & TETHER CABLE

FIGURE AND INDEX NUMBER	GROUP	SERVICE TOOLS	EFFEC-TIVITY	UNITS PER ASSY
	MAJOR ASSEMBLY	TOW BAR, BRIDLE & TETHER CABLE		
	PART NUMBER	1 2 3 4 5 6 7 NOMENCLATURE		
136 -	C63F51596-1	TOW BAR ASSY - (CANADAIR 41-322-001)		1
- 1	C63F51597-1	.FORK ASSY		1
	AN530-10RF6	..SCREW		4
	C63C51599-1	.PIN ASSY		1
- 2	C63B51600-1	..PIN - SLOTTED		1
- 3	C63B51602-1	..PIN - (MAKE FROM BL-SB16BA03S (AYG))		1
- 4	NAS561P6-15	..PIN		1
- 5	AN565E524H6	.SETSCREW		1
- 6	C63B51600-2	.PIN		1
- 7	AN122735	.DOWEL		1
- 8	C63D51598-1	.TOW BAR		1
- 9	AN3-20A	.BOLT - (6 SPARES)		7
	MS21042L3	.NUT		7
-10	C63B51601-1	.NAMEPLATE		1
	AN535-2-3	.SCREW		4
	456675-1	BRIDLE ASSY - TOWING (CANADAIR 41-322-003)		1
-11	456686-1	.BRACKET ASSY		1
R	L622	..BUSHING - (V80647)		2
-12	AN5DD14A	.BOLT		6
	AN960-516	.WASHER		6
	MS21042L5	.NUT		6
-13	360318-2	.CABLE ASSY - TOWING		2
-14	41-322-003-10	.CABLE		1
-15	327	.CLAMP - (PAS) (WIRE ROPE)		2
	MS24665-289	.COTTER PIN		1
	456688-1	CABLE ASSY - TETHER (CANADAIR 41-322-015)		1
-16	360318-1	.CABLE ASSY		2
	456687-1	.SWIVEL ASSY		1
R -17	6-403	..SWIVEL - (V35043) (1/2 IN. JAW END TYPE)		1
-18	41-322-015-8	..HOOK		1
-19	41-322-015-7	..PLATE		2
-20	41-322-015-9	..PIN		4
-21	AN4-14A	.BOLT		2
	AN960-416	.WASHER		2
	MS21042L4	.NUT		2

-OOO-

DELETED

FIGURE 137 ENGINE STANDS, JACKS & CABLES

FIGURE AND INDEX NUMBER	GROUP	SERVICE TOOLS	EFFEC-TIVITY	UNITS PER ASSY
	MAJOR ASSEMBLY	ENGINE STANDS, JACKS & CABLES		
	PART NUMBER	1 2 3 4 5 6 7 NOMENCLATURE		
		D E L E T E D		

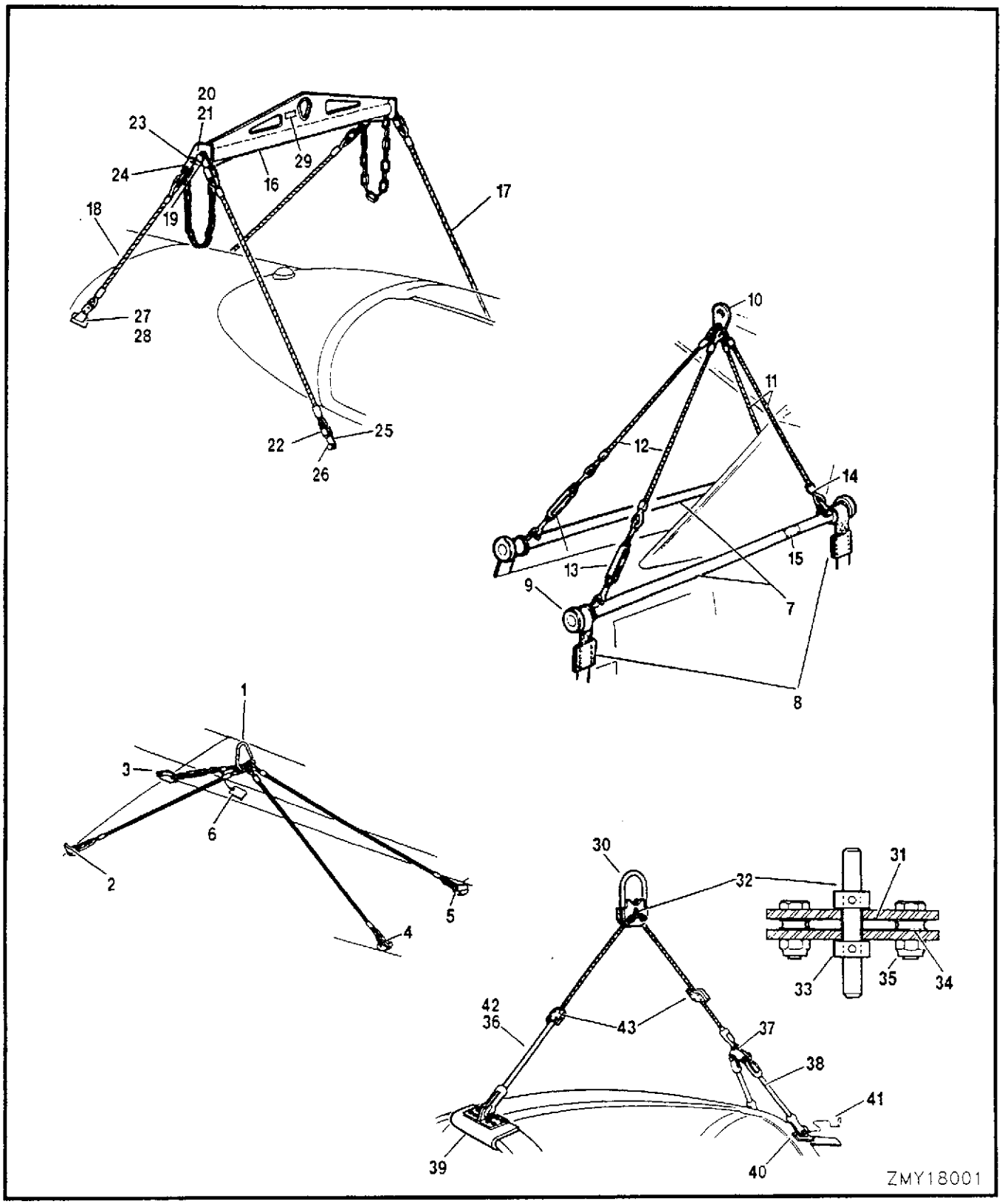

FIGURE 138 ENGINE FLOOR STAND & SLINGS

FIGURE AND INDEX NUMBER	GROUP	SERVICE TOOLS	EFFEC-TIVITY	UNITS PER ASSY
	MAJOR ASSEMBLY	ENGINE FLOOR STAND & SLINGS		
	PART NUMBER	1 2 3 4 5 6 7 NOMENCLATURE		
138	360294-1	SLING - WING (PORT & STBD) (CANADAIR 41-322-005)		1
- 1	360299-1	.CABLE ASSY - WING SLING		1
- 2	360295-1	.ADAPTER ASSY - SLING		1
	AN4-6A	..BOLT		2
- 3	360296-1	.ADAPTER ASSY - SLING		1
	AN4-7A	..BOLT		2
- 4	360297-1	.ADAPTER ASSY		1
- 5	360297-2	.ADAPTER ASSY		1
	AN4-6A	..BOLT		2
- 6	261437-1	.PLATE - IDENTIFICATION		1
	360298-1	.NAMEPLATE		1
	41-322-005-16	.CABLE - NAMEPLATE		1
	602273-1	SLING - REAR FUSELAGE (CANADAIR 41-322-006)		1
- 7	602276-1	.BEAM ASSY - (WELDED)		2
- 8	602274-1	.BELT ASSY - FORWARD		1
	602275-1	.BELT ASSY - REAR		1
- 9	602277-1	.GUARD ASSY - (BEAM END)		4
	602279-1	.WASHER		4
R	MS35207-284	.SCREW		4
	602278-1	.CABLE ASSY		1
-10	41-322-044-5	..LINK - HOIST		1
-11	41-322-044-17	..CABLE ASSY		2
-12	41-322-044-18	..CABLE ASSY		2
-13	41-322-044-21	...TURNBUCKLE - (V35043)		1
-14	41-322-044-20	...SHACKLE - (V35043)		1
-15	602280-1	.NAMEPLATE		1
	41-322-044-33	.HOSE - RUBBER		4
	555833-1	SLING - AIRCRAFT COMPLETE & MAINTENANCE (CANADAIR 41-322-004)		1
-16	555834-1	.BEAM ASSY - SLING		1
-17	555842-1	.CABLE ASSY - FORWARD		2
-18	555843-1	.CHAIN & CABLE ASSY - REAR		2
-19	555838-1	.LINK		2
-20	555839-1	.SLEEVE		2
	NAS561P6-24	.PIN		2
-21	AN4-14A	.BOLT		2
	AN960-416	.WASHER		2
	AN315-4R	.NUT		2
-22	555835-1	.CLEVIS		8
-23	MS20392-7C39	.PIN		14
	AN960-416	.WASHER		14
	MS24665-285	.COTTER PIN		14
-24	AN8-17A	.BOLT		2
	AN935-816	.WASHER		2
	AN315-8R	.NUT		2
-25	555836-1	.ADAPTER - FORWARD		2
-26	AN8-12A	.BOLT		2
	555840-1	.BUSHING		2
-27	555837-1	.ADAPTER - REAR LH		1
	555837-2	.ADAPTER - REAR RH		1
-28	AN4-10A	.BOLT		8
-29	555841-1	.NAMEPLATE		1
	AN535-2-4	.SCREW		4
	602261-1	SLING - CANOPY (CANADAIR 41-322-008)		1
	602264-1	.LINK ASSY - HOIST		1
-30	602266-1	..LINK - (WELDED)		1

FIGURE AND INDEX NUMBER	GROUP	SERVICE TOOLS	EFFEC-TIVITY	UNITS PER ASSY
	MAJOR ASSEMBLY	ENGINE FLOOR STAND & SLINGS		
	PART NUMBER	1 2 3 4 5 6 7 NOMENCLATURE		
138 -31	602265-1	..ROLLER		1
-32	602271-1	..SHAFT - ROLLER		1
-33	602267-1	..BUSHING		2
	NAS561P3-8	..PIN		2
-34	AN111-4	..BUSHING		2
-35	AN3-6A	..BOLT		2
	MS21042L3	..NUT		2
-36	602268-1	.CABLE ASSY - FORWARD		1
-37	602269-1	.LINK		1
-38	602268-2	.CABLE ASSY - REAR		1
-39	602262-1	.ADAPTER ASSY - FORWARD		1
-40	602263-1	.ADAPTER ASSY - REAR		2
	41-322-008-26	..CABLE		1
-41	602272-1	..CLIP		1
-42	AN3-5A	.BOLT		6
	MS21042L3	.NUT		6
-43	602270-1	.STOP - HALF		2
	602270-2	.STOP - HALF		2
R	MS35206-213	.SCREW		8
		-000-		

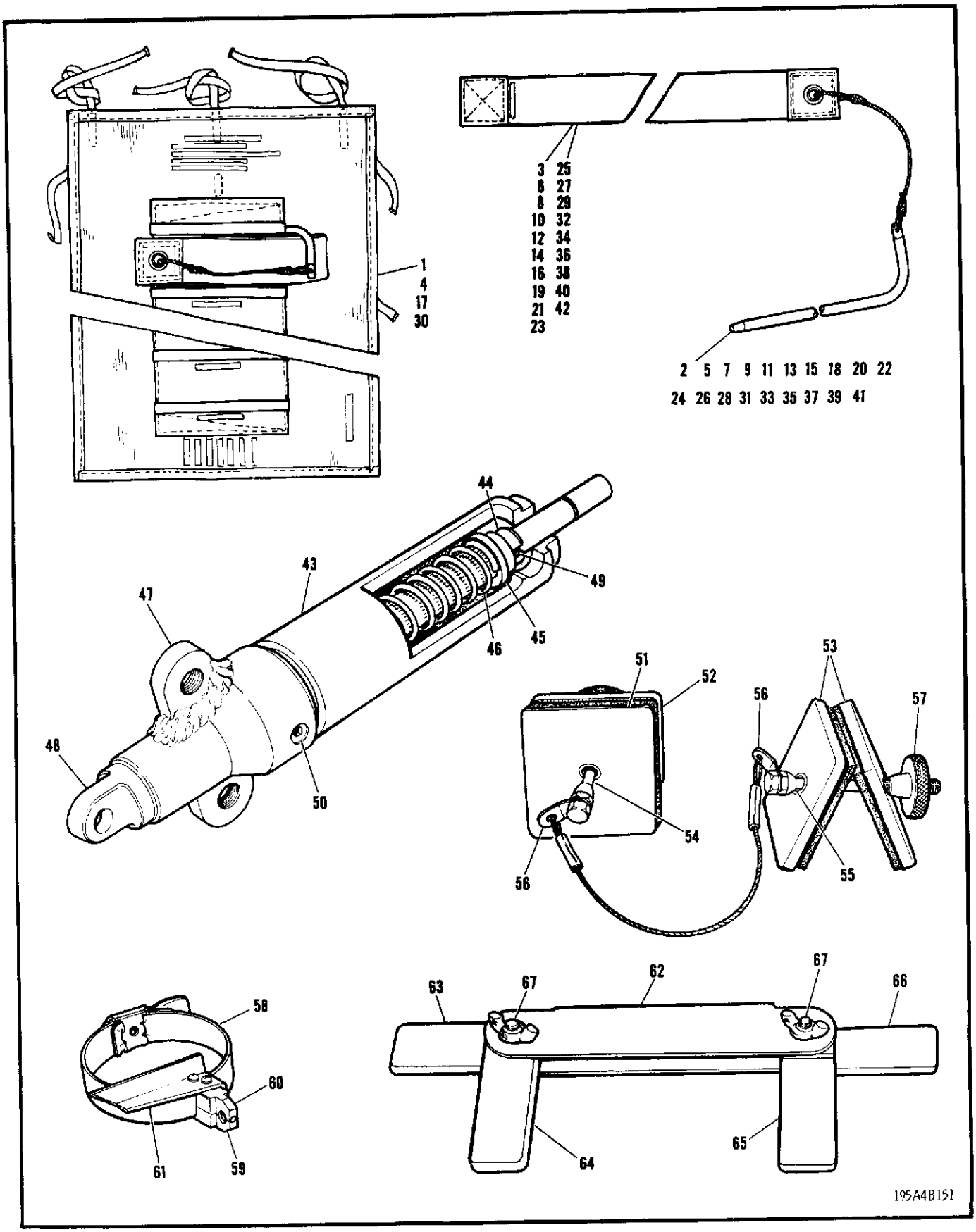

FIGURE 139 RIG PINS INITIATOR DUMMY & GAUGES

FIGURE AND INDEX NUMBER	GROUP	SERVICE TOOLS	EFFEC-TIVITY	UNITS PER ASSY
	MAJOR ASSEMBLY	RIG PINS INITIATOR DUMMY & GAUGES		
	PART NUMBER	1 2 3 4 5 6 7 NOMENCLATURE		
139 -	555852-1	KIT - FLAP RIG PINS (CANADAIR 41-323-021)		1
- 1	555872-1	.CASE - RIG PIN (CANADAIR 41-323-038-1)		1
	555830-14	.PIN ASSY - RIG		3
- 2	160557-7	..PIN - RIG		1
- 3	265159-14	..BUNTING ASSY		1
	555853-1	KIT - AILERON RIG PINS(CANADAIR 41-323-022)		1
- 4	555872-2	.CASE - RIG PIN (CANADAIR 41-323-038-2)		1
	555830-1	.PIN ASSY - RIG		2
- 5	160557-1	..PIN - RIG		1
- 6	265159-1	..BUNTING ASSY		1
	555830-2	.PIN ASSY - RIG		1
- 7	160557-1	..PIN - RIG		1
- 8	265159-2	..BUNTING ASSY		1
	555830-3	.PIN ASSY - RIG		1
- 9	160557-2	..PIN - RIG		1
-10	265159-3	..BUNTING ASSY		1
	555830-4	.PIN ASSY - RIG		1
-11	160557-3	..PIN - RIG		1
-12	265159-4	..BUNTING ASSY		1
	555830-5	.PIN ASSY - RIG		1
-13	160557-3	..PIN - RIG		1
-14	265159-5	..BUNTING ASSY		1
	555830-6	.PIN ASSY - RIG		2
-15	160557-2	..PIN - RIG		1
-16	265159-6	..BUNTING ASSY		1
	555854-1	KIT - ELEVATOR RIG PINS (CANADAIR 41-323-023)		1
-17	555872-3	.CASE - RIG PIN (CANADAIR 44-323-038-3)		1
	555830-3	.PIN ASSY - RIG		1
-18	160557-2	..PIN - RIG		1
-19	265159-3	..BUNTING ASSY		1
	555830-7	.PIN ASSY - RIG		1
-20	160557-7	..PIN - RIG		1
-21	265159-7	..BUNTING ASSY		1
	555830-8	.PIN ASSY - RIG		1
-22	160557-5	..PIN - RIG		1
-23	265159-8	..BUNTING ASSY		1
	555830-9	.PIN ASSY - RIG		1
-24	160557-7	..PIN - RIG		1
-25	265159-9	..BUNTING ASSY		1
	555830-10	.PIN ASSY - RIG		1
-26	160557-6	..PIN - RIG		1
-27	265159-10	..BUNTING ASSY		1
	555830-11	.PIN ASSY - RIG		1
-28	160557-7	..PIN - RIG		1
-29	265159-11	..BUNTING ASSY		1
	555855-1	KIT - RUDDER RIG PINS (CANADAIR 41-323-024)		1
-30	555872-4	.CASE - RIG PIN (CANADAIR 41-323-038-4)		1
	555830-3	.PIN ASSY - RIG		1
-31	160557-2	..PIN - RIG		1
-32	265159-3	..BUNTING ASSY		1
	555830-8	.PIN ASSY - RIG		1
-33	160557-5	..PIN - RIG		1
-34	265159-8	..BUNTING ASSY		1
	555830-10	.PIN ASSY - RIG		1
-35	160557-6	..PIN - RIG		1
-36	265159-10	..BUNTING ASSY		1
	555830-12	.PIN ASSY - RIG		2
-37	160557-8	..PIN - RIG		1
-38	265159-12	..BUNTING ASSY		1
	555830-13	.PIN ASSY - RIG		1
-39	160557-7	..PIN - RIG		1
-40	265159-13	..BUNTING		1
	555830-15	.PIN ASSY - RIG		1

FIGURE AND INDEX NUMBER	GROUP	SERVICE TOOLS	EFFEC-TIVITY	UNITS PER ASSY
	MAJOR ASSEMBLY	RIG PINS INITIATOR DUMMY & GAUGES		
	PART NUMBER	1 2 3 4 5 6 7 NOMENCLATURE		
139 -41	160557-3	..PIN - RIG		1
-42	265159-15	..BUNTING ASSY		1
	555870-1	INITIATOR - SEAT DUMMY M27 (CANADAIR 41-341-010)		1
-43	602288-1	.BODY - INITIATOR		1
-44	602291-1	.STOP - SPRING		1
-45	602290-1	.WASHER		1
R -46	9-0810-21	.SPRING - (V15840)		1
-47	602287-1	.CAP ASSY - (WELD)		1
-48	602289-1	.PIN - GAUGE		1
-49	NAS561P3-7	.PIN		1
-50	AN565B6H2	.SETSCREW		1
	555871-1	KIT - CONTROL SURFACE BACKLASH (CANADAIR 41-332-032)		1
	555873-1	.CLAMP ASSY		1
-51	160566-1	..PAD ASSY - CLAMP		1
-52	160566-2	..PAD ASSY - CLAMP		1
-53	160566-3	..PAD ASSY		2
-54	160567-1	..BOLT		1
-55	160567-2	..BOLT		1
	160569-1	..NUT		2
-56	160570-1	..TAB WASHER		2
-57	160568-1	..NUT - KNURLED		2
	MS24665-130	..COTTER PIN		2
	41-332-032-17	..CABLE - (1/16 X 9 IN.)		2
	555874-1	.ADAPTER ASSY		1
-58	AN737TW74-91	..CLAMP		1
-59	160572-1	..ADAPTER - HALF		1
-60	160572-2	..ADAPTER - HALF		1
-61	160571-1	..BRACKET		1
	MS35333-36	..LOCK WASHER		1
	AN515-5R12	..SCREW		1
	555793-1	KIT - CANOPY CLEARANCE GAUGES (CANADAIR 41-332-010)		1
-62	360313-1	.FRAME		1
-63	360312-1	.GAUGE - CANOPY / SEAL NO-GO		1
-64	360312-2	.GAUGE - CANOPY / SEAL GO		1
-65	360312-3	.GAUGE - CANOPY / WINDSHIELD NO-GO		1
-66	360312-4	.GAUGE - CANOPY / WINDSHIELD GO		1
-67	AN3C10A	.BOLT		2
	MS35426-13	.NUT		2

-OOO-

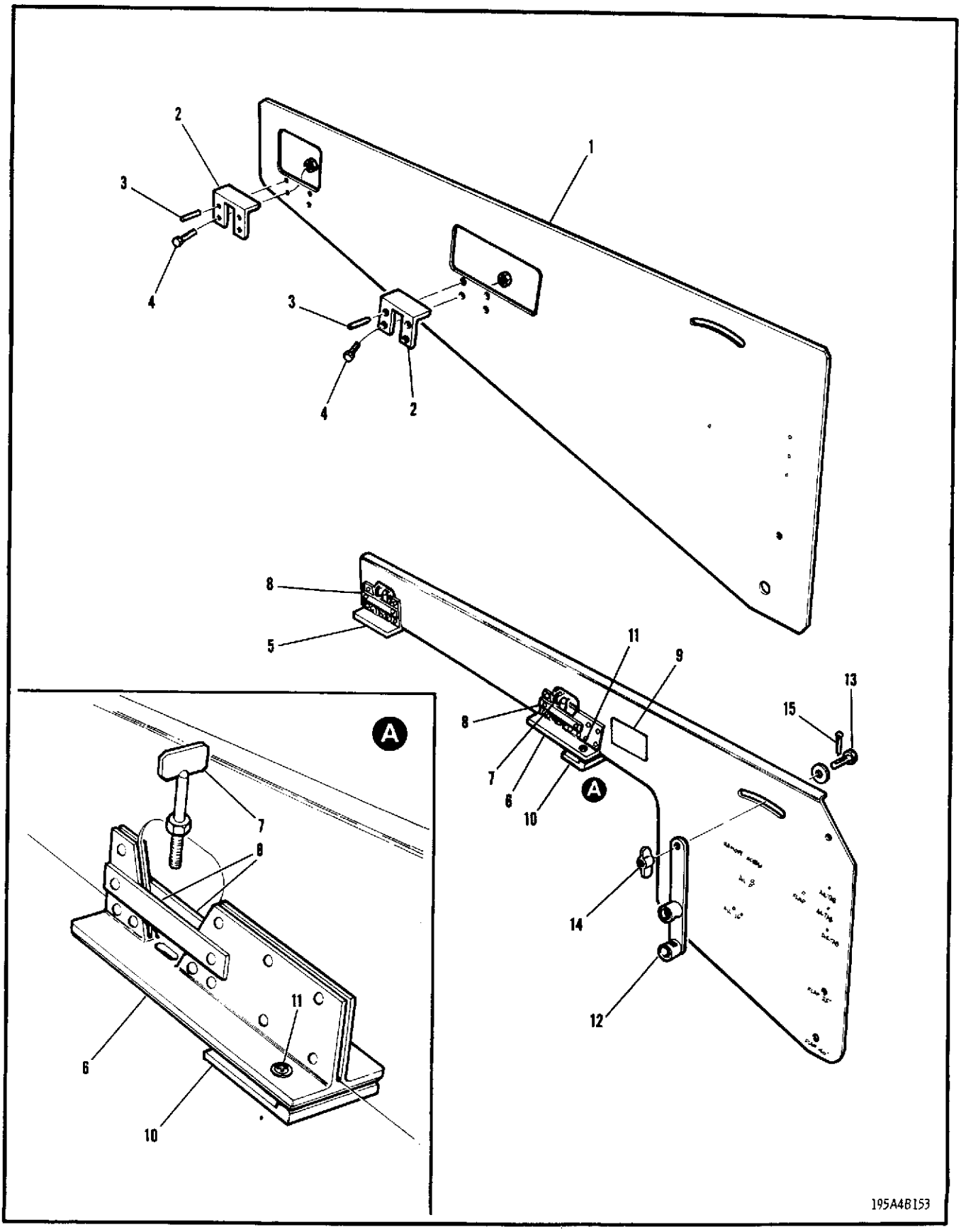

FIGURE 140 FLAP, AILERON & SPRING TAB RIG BOARDS

FIGURE AND INDEX NUMBER	GROUP	SERVICE TOOLS	EFFEC-TIVITY	UNITS PER ASSY
	MAJOR ASSEMBLY	FLAP, AILERON & SPRING TAB RIG NBOARDS		
	PART NUMBER	1 2 3 4 5 6 7 NOMENCLATURE		
140 -	602283-1	RIG BOARD ASSY - FLAP, AIL. & SPRING TAB		1
	555866-1	.RIG BOARD ASSY - FLAP, AIL. & SPRING TAB		1
	602281-1	..GAUGE ASSY - FACILITY (CANADAIR 41-341-033)		1
- 1	602281-2	...PLATE - FACILITY GAUGE		1
	X21 (1/16 ID)	...BUSHING - (V80647)		1
	X21 (3/32 ID)	...BUSHING - (V80647)		1
	X21 (.0980 ID)	...BUSHING - (V80647)		1
	X22 (3/16 ID)	...BUSHING - (V80647)		1
- 2	602281-3	...ANGLE - FACILITY GAUGE		2
- 3	AN150279	...PIN		4
- 4	AN3-6	...BOLT		4
	AN960-3	...WASHER		4
	MS21042L3	...NUT		4
	41-341-034	...LAYOUT - GLASS CLOTH (DRAWING)		REF
	555867-1	..PLATE - RIG BOARD		1
- 5	160560-2	..PAD - FORWARD REST(CANADAIR 41-341-032-4)		1
- 6	160560-1	..PAD - REAR REST (CANADAIR 41-341-032-3)		1
- 7	160559-1	..SCREW ASSY - RIG BOARD RETAINING (CANADAIR 41-341-032-2)		2
- 8	160561-1	..STRIP - RETAINING		4
- 9	160564-1	.NAMEPLATE		1
-10	160573-1	.CLAMP - (CANADAIR 41-341-032-14)		1
R -11	MS35207-266	.SCREW		2
	AN960-10	.WASHER		2
-12	160574-1	.LOCATOR ASSY - (CANADAIR 41-341-032-17)		1
-13	160575-1	.BOLT ASSY - RETAINER (CANADAIR 41-341-032-18)		1
-14	MS35426-15	.NUT		1
-15	NAS561P3-5	.PIN		1

-000-

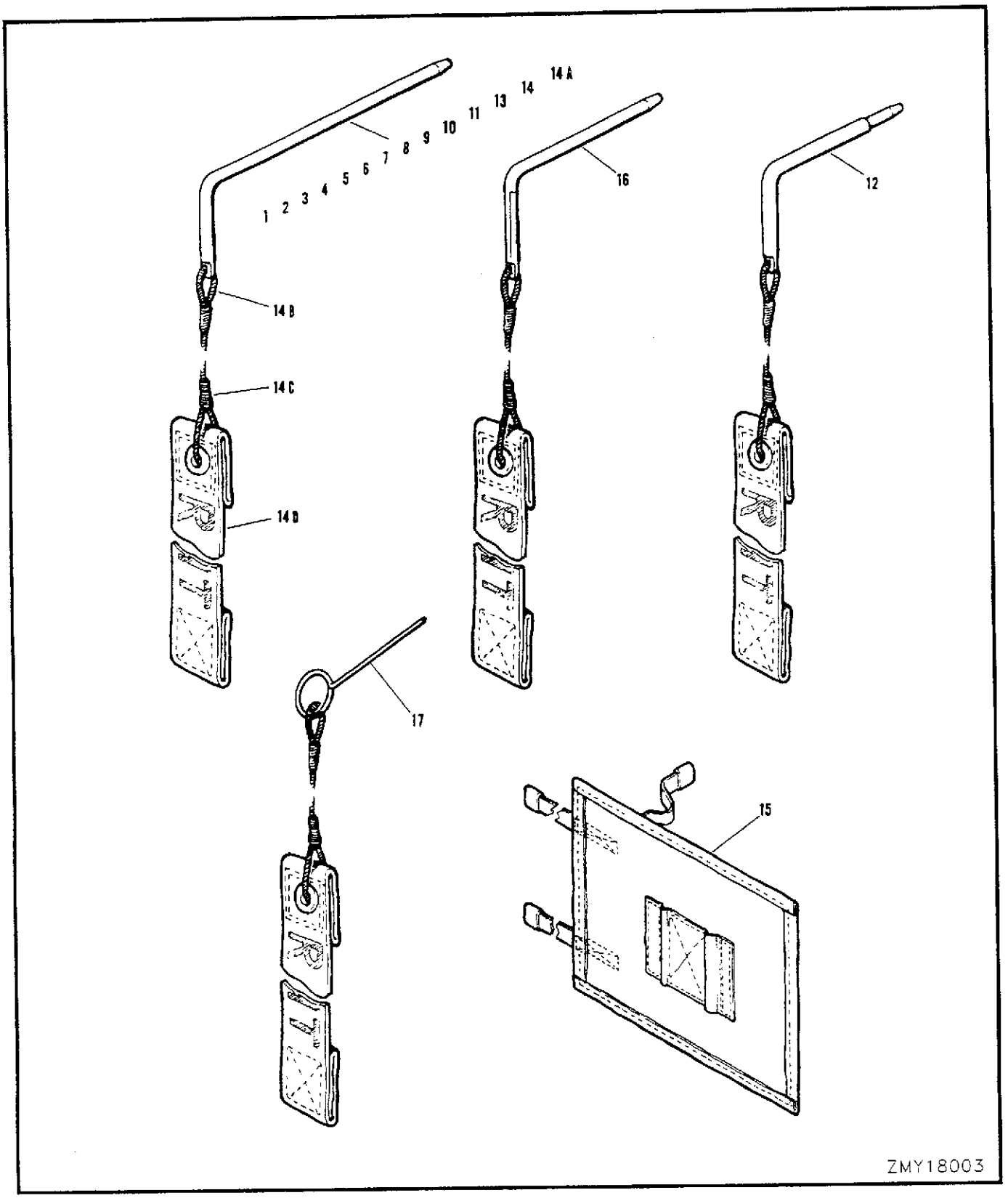

FIGURE 141 RIGGING PINS

FIGURE AND INDEX NUMBER	GROUP	SERVICE TOOLS	EFFEC-TIVITY	UNITS PER ASSY
	MAJOR ASSEMBLY	RIGGING PINS		
	PART NUMBER	1 2 3 4 5 6 7 NOMENCLATURE		
R 141 -	41-323-002-1	KIT - COMPLETE AIRCRAFT RIG PIN (V88308)		1
- 1	555830-1	.PIN ASSY - FUSELAGE STA 181 AILERON RIG (CANADAIR 41-323-002-6)		2
	160557-1	..PIN - RIG		1
	41-323-002-51	..CABLE		1
	41-323-002-52	..WIRE		2
	265159-1	..BUNTING ASSY - RIG PIN		1
- 2	555830-2	.PIN ASSY - FUSELAGE STA 190 AILERON RIG (CANADAIR 41-323-002-7)		1
	160557-1	..PIN - RIG		1
	41-323-002-51	..CABLE		1
	41-323-002-52	..WIRE		2
	265159-2	..BUNTING ASSY - RIG PIN		1
- 3	555830-3	.PIN ASSY - FUSELAGE STA 207 AILERON, ELEVATOR & RUDDER RIG (CANADAIR 41-323-002-8)		1
	160557-2	..PIN - RIG		1
	41-323-002-51	..CABLE		1
	41-323-002-52	..WIRE		2
	265159-3	..BUNTING ASSY - RIG PIN		1
- 4	555830-4	.PIN ASSY - FUSELAGE STA 262 AILERON RIG (CANADAIR 41-323-002-9)		1
	160557-3	..PIN - RIG		1
	41-323-002-51	..CABLE		1
	41-323-002-52	..WIRE		2
	265159-4	..BUNTING ASSY - RIG PIN		1
- 5	555830-5	.PIN ASSY - FUSELAGE STA 286 AILERON RIG (CANADAIR 41-323-002-10)		1
	160557-3	..PIN - RIG		1
	41-323-002-51	..CABLE		1
	41-323-002-52	..WIRE		2
	265159-5	..BUNTING ASSY - RIG PIN		1
- 6	555830-6	.PIN ASSY - WING STA 129 AILERON RIG (CANADAIR 41-323-002-11)		2
	160557-2	..PIN - RIG		1
	41-323-002-51	..CABLE		1
	41-323-002-52	..WIRE		2
	265159-6	..BUNTING ASSY - RIG PIN		1
- 7	555830-7	.PIN ASSY - FUSELAGE STA 180 ELEVATOR RIG (CANADAIR 41-323-002-12)		1
	160557-4	..PIN - RIG		1
	41-323-002-51	..CABLE		1
	41-323-002-52	..WIRE		2
	265159-7	..BUNTING ASSY - RIG PIN		1
- 8	555830-8	.PIN ASSY - FUSELAGE STA 231 ELEVATOR & RUDDER RIG (CANADA IR 41-323-002-13)		1
	160557-5	..PIN - RIG		1
	41-323-002-51	..CABLE		1
	41-323-002-52	..WIRE		2
	265159-8	..BUNTING ASSY - RIG PIN		1
- 9	555830-9	.PIN ASSY - FUSELAGE STA 262 ELEVATOR RIG (CANADAIR 41-323-002-14)		1
	160557-4	..PIN - RIG		1
	41-323-002-51	..CABLE		1
	41-323-002-52	..WIRE		2
	265159-9	..BUNTING ASSY - RIG PIN		1
-10	555830-10	.PIN ASSY - FUSELAGE STA 3 87 ELEVATOR & RUDDER RIG (CANADA IR 41-323-002-15)		1
	160557-6	..PIN - RIG		1
	41-323-002-51	..CABLE		1
	41-323-002-52	..WIRE		2
	265159-10	..BUNTING ASSY - RIG PIN		1
-11	555830-11	.PIN ASSY - FUSELAGE STA 406 ELEVATOR RIG (CANADAIR 41-323-002-16)		1
	160557-7	..PIN - RIG		1
	41-323-002-51	..CABLE		1
	41-323-002-52	..WIRE		2

FIGURE AND INDEX NUMBER	GROUP / MAJOR ASSEMBLY / PART NUMBER	SERVICE TOOLS / RIGGING PINS / 1 2 3 4 5 6 7 NOMENCLATURE	EFFEC-TIVITY	UNITS PER ASSY
141 -	265159-11	..BUNTING ASSY - RIG PIN		1
-12	555830-12	.PIN ASSY - FUSELAGE STA 154 RUDDER RIG (CANADAIR 41-323-002-17)		2
	160557-8	..PIN - RIG		1
	41-323-002-51	..CABLE		1
	41-323-002-52	..WIRE		2
	265159-12	..BUNTING ASSY - RIG PIN		1
-13	555830-13	.PIN ASSY - FUSELAGE STA 262 RUDDER RIG (CANADAIR 41-323-002-18)		1
	160557-4	..PIN - RIG		1
	41-323-002-51	..CABLE		1
	41-323-002-52	..WIRE		2
	265159-13	..BUNTING ASSY - RIG PIN		1
-14	555830-14	.PIN ASSY - FUSELAGE STA 282 FLAP RIG (CANADAIR 41-323-002-19)		1
	160557-7	..PIN - RIG		1
	41-323-002-51	..CABLE		1
	41-323-002-52	..WIRE		2
	265159-14	..BUNTING ASSY - RIG PIN		1
	555830-15	.PIN ASSY - FUSELAGE STA 154 RUDDER RIG (CANADAIR 41-323-002-46)		1
-14A	160557-3	..PIN - RIG		1
-14B	41-323-002-51	..CABLE		1
-14C	41-323-002-52	..WIRE		2
-14D	265159-15	..BUNTING ASSY - RIG PIN		1
	555856-1	KIT - ENGINE CONTROL RIG PINS (CANADAIR 41-323-025)		1
-15	602284-1	.CASE ASSY - RIG PINS		1
-16	456672-1	.PIN ASSY - POWER CONTROL AIRFRAME RIG (CANADAIR 41-323-003)		1
	265210-1	..PIN - RIG		1
	41-323-003-11	..CABLE		1
	265211-1	..BUNTING ASSY - RIG PIN		1
-17	456676-1	.PIN ASSY - POWER CONTROL ENGINE RIG (CANADAIR 41-323-015)		1
	265212-1	..PIN - RIG		1
	41-323-015-13	..CABLE		1
	265213-1	..BUNTING ASSY - RIG PIN		1

-000-

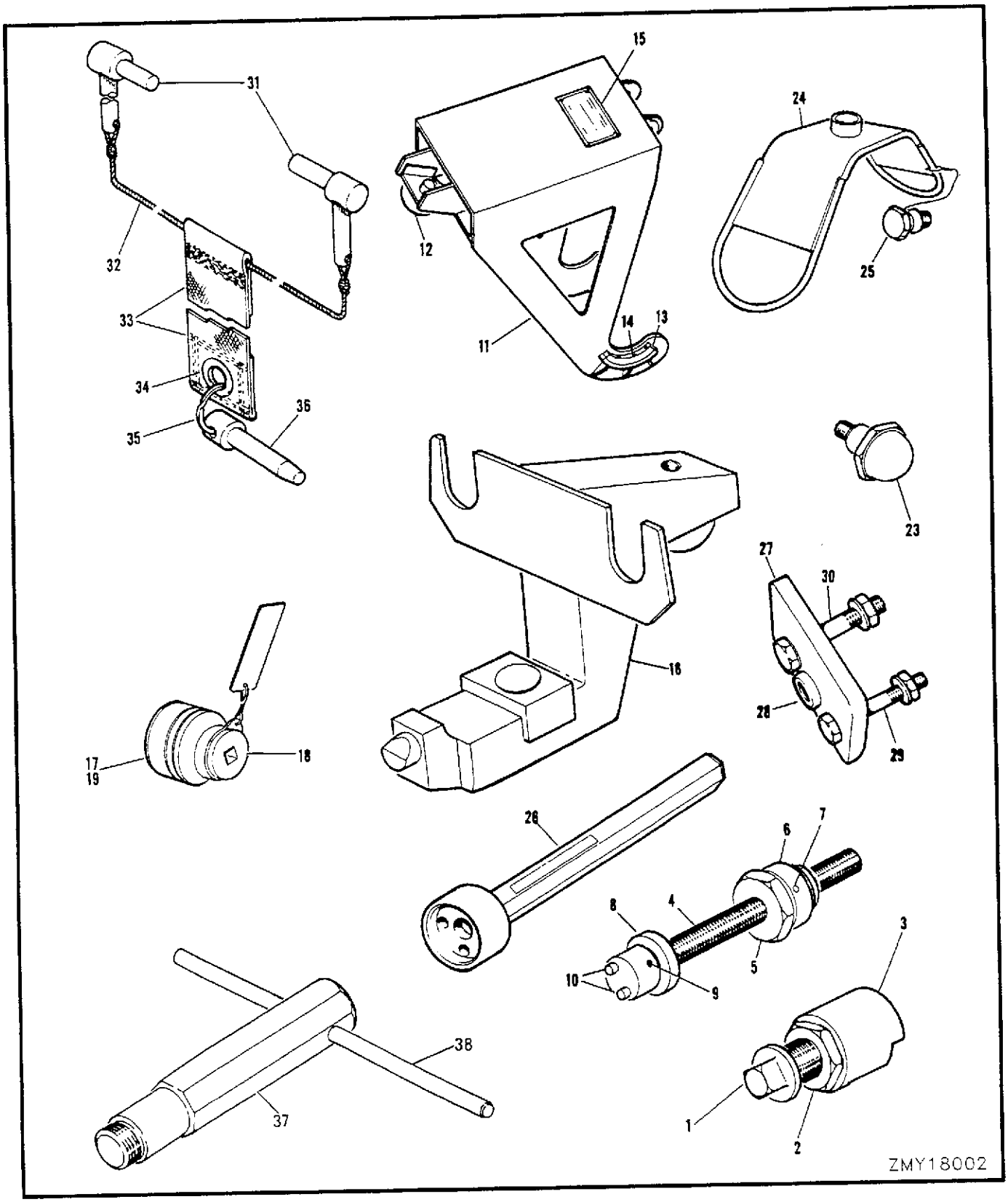

FIGURE 142 SPECIAL TOOLS & ADAPTORS

FIGURE AND INDEX NUMBER	GROUP / MAJOR ASSEMBLY / PART NUMBER	SERVICE TOOLS / SPECIAL TOOLS & ADAPTORS / 1 2 3 4 5 6 7 NOMENCLATURE	EFFEC-TIVITY	UNITS PER ASSY
142 -	41-332-012	GUARD - WING TO FUSELAGE ATT BOLT INSERTING		1
	555792-1	KIT - MAIN LANDING GEAR PIVOT PIN FORWARD & REAR BEARING REMOVER & REPLACER (CANADAIR 41-332-008)		1
	360310-1	.REMOVER ASSY - PIVOT PIN		1
- 1	265203-1	..SHAFT - SCREW		1
- 2	265202-1	..NUT		1
- 3	265201-1	..HOUSING		1
	360311-1	.REPLACER ASSY - PIVOT PIN		1
- 4	265207-1	..SHAFT		1
- 5	265205-1	..NUT		1
- 6	265206-1	..COLLAR		1
- 7	AN150254	..PIN		2
- 8	265204-1	..ADAPTER		1
- 9	NAS561P4-13	..PIN		1
-10	AN150280	..PIN		2
	555797-1	ADAPTER ASSY - NOSE LDG/GR WHEEL CHANGING (CANADAIR 41-322-011)		1
-11	555798-1	.ADAPTER ASSY - NOSE WHEEL CHANGING		1
-12	555800-1	.PAD - JACK		1
-13	160581-1	.PLATE		2
R -14	MS35206-230	.SCREW		6
-15	555801-1	.NAMEPLATE		1
-16	C63F51613-1	ADAPTER ASSY - MAIN LANDING GEAR JACKING (CANADAIR 41-322-002)		1
	555803-1	WRENCH ASSY - NOSE LANDING GEAR AXLE NUT (CANADAIR 41-332-004)		1
-17	LDH482	.SOCKET - (V09698)		1
	160555-1	.RING		1
-18	160556-1	.ADAPTER		1
	160554-2	.TAG - IDENTIFICATION		1
	41-332-004-6	.CABLE - TAG		1
	555802-1	WRENCH ASSY - MAIN LANDING GEAR AXLE NUT (CANADAIR 41-332-003)		1
-19	LDH682	.SOCKET - (V09698)		1
	160555-1	.RING		1
-20		DELETED		
-21		DELETED		
-22		DELETED		
		DELETED		
-23	360356-1	ADAPTER - FORWARD & REAR FUSELAGE & WING JACK FITTING (CANADAIR 41-322-010)		1
	360291-1	ADAPTER ASSY - EQUIPMENT PICKETING (CANADAIR 41-323-014)		1
-24	360292-1	.ADAPTER ASSY - PICKETING		1
-25	360293-1	.BOLT - ADAPTER		1
	41-323-014-7	.CABLE - BOLT		1
-26	555868-1	TOOL - NOSE LANDING GEAR SHOCK ABSORBER (CANADAIR 41-332-005)		1
	555751-1	JIG ASSY - TAIL PIPE TAPER PIN SEAL DRILL (CANADAIR 41-333-017)		1
	602306-1	.PLATE ASSY - DRILL JIG		1
-27	41-333-017-3	..PLATE - DRILL JIG		1
-28	X611A	..BUSHING - (V80647)		1
-29	AN3-10A	..BOLT		1
-30	AN3-11A	..BOLT		1
	MS35333-19	.LOCK WASHER		1
	MS35333-40	.LOCK WASHER		1
	MS35650-302	.NUT		1
	MS35650-3252	.NUT		1
	C66D00743	GAUGE ASSY - CANOPY HINGE CLEARANCE		1
-31	C65D00217-1	.GAUGE - CANOPY HINGE CLEARANCE (IAW C-12-114-000/CS-15)		2

FIGURE AND INDEX NUMBER	GROUP	SERVICE TOOLS	EFFEC-TIVITY	UNITS PER ASSY
	MAJOR ASSEMBLY	SPECIAL TOOLS & ADAPTORS		
	PART NUMBER	1 2 3 4 5 6 7 NOMENCLATURE		
142 -32	C66D00743-13	.CABLE - WIRE (1/16 DIA X 52 IN. LONG)		1
-33	C66D00743-12	.BUNTING - (14 IN. LONG)		1
-34	MS20230B4	.GROMMET - (5325-00-231-6591)		1
-35	8432-1-1/4	.RING - (PAS)		1
-36	C66D00743-11	.PIN - (1/2 IN. DRILL ROD STOCK DRILL NO. 10 (.193 IN.)		1
	C67B00217	TOOL - M/LDG/GR FLUID FIL LER NUT REMOVING		1
-37	C67B00215	.BODY - TOOL		1
-38	C67B00216	.HANDLE		1

-OOO-

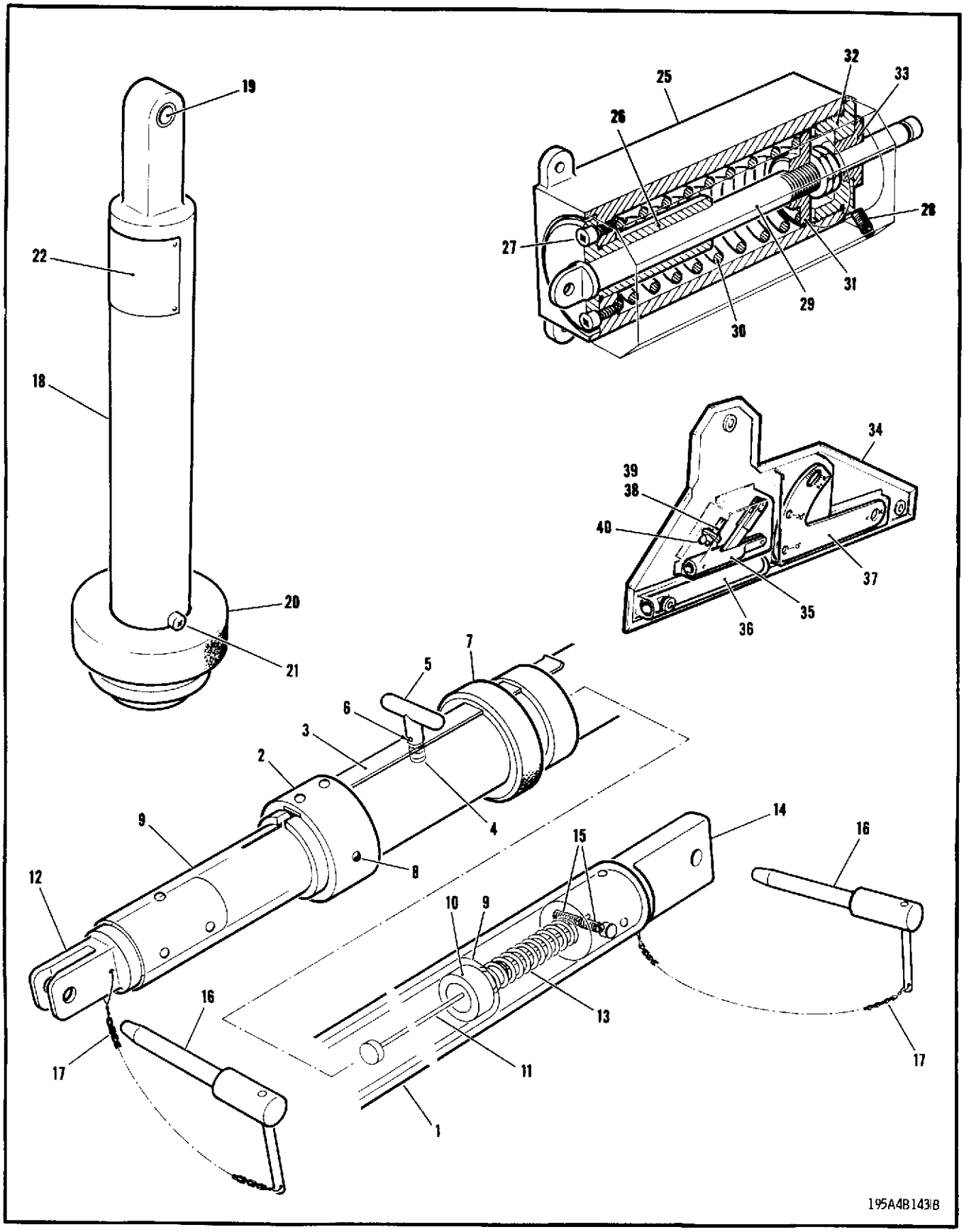

FIGURE 143 CANOPY STRUT, DUMMY CATAPULT & INITIATOR

FIGURE AND INDEX NUMBER	GROUP	SERVICE TOOLS	EFFEC-TIVITY	UNITS PER ASSY
	MAJOR ASSEMBLY	CANOPY STRUT[DUMMY CATAPULT & INITIATOR		
	PART NUMBER	1 2 3 4 5 6 7 NOMENCLATURE		
143 -	C63F51604-1	STRUT ASSY - CANOPY (CANADAIR 41-333-001)		1
- 1	C63D51606-1	.TUBE ASSY - STRUT OUTER		1
	C63C51607-1	.LOCK ASSY - SPRING		1
- 2	41-333-001-20	..RING		1
- 3	41-333-001-21	..SPRING - FLAT		1
- 4	C63B51611-1	..PIN - SPRING LOCK		1
- 5	C63B51608-1	..PIN ASSY - SPRING LOCK		1
- 6	NAS561P2-6	..PIN		1
- 7	C63B51612-1	..RING - LOCK SLIDING		1
R - 8	MS35207-259	.SCREW		3
	C63D51605-1	.TUBE ASSY - STRUT INNER		1
- 9	41-333-001-8	..TUBE - STRUT		1
-10	41-333-001-12	..END FITTING - TUBE		1
-11	C63B51609-1	..ROD ASSY		1
-12	41-333-001-10	..FITTING - INNER TUBE FORK		1
-13	9-1010-11	.SPRING - (V99333)		1
-14	41-333-001-11	.FITTING - OUTER TUBE END		1
-15	AN565D1032H9	.SETSCREW		2
-16	C63C51610-1	.PIN ASSY		2
-17	41-333-001-32	.CHAIN		2
	555818-1	CATAPULT ASSY - CANOPY DUMMY (CANADAIR 41-341-005)		1
-18	555816-1	.CATAPULT ASSY - CANOPY DUMMY		1
-19	AB648	.BUSHING - (RMB)		1
-20	555815-1	.NUT - KNURLED		1
-21	41-341-005-6	.SCREW		1
-22	555817-1	.NAMEPLATE		1
	AN530-2R4	.SCREW		4
-23		DELETED		
-24		DELETED		
	555822-1	INITIATOR ASSY - DUMMY (REPLACING M3A1 & M32) (CANADAIR 41-341-004)		1
-25	555823-1	.HOUSING ASSY - INITIATOR		1
-26	555824-1	.GUIDE - SHAFT		1
-27	41-341-004-12	.SCREW		2
-28	41-341-004-13	.SCREW		1
-29	555825-1	.SHAFT - INITIATOR		1
-30	555829-1	.SPRING - COMPRESSION		1
-31	555826-1	.RETAINER - SPRING		1
	AN316-6R	.NUT		2
-32	555828-1	.CAP - HOUSING		1
-33	555827-1	.BUSHING		1
	555875-1	KIT - CANOPY & SEAT LEG GUARD RIGGING EQUIPMENT (CANADAIR 41-341-036)		1
-34	602302-1	.CASE ASSY - (CANOPY & SEAT RIGGING KIT)		1
	602295-1	.BAR ASSY - CANOPY OPERATING BELLCRANK ASSISTER (CANADAIR 41-341-037)		1
-35	602296-1	..BAR ASSY - (CANOPY BELL CRANK)		1
-36	602297-1	..TUBE - (CANOPY BELLCRANK)		1
	602298-1	.FIXTURE ASSY - SEAT LEG GUARD RIGGING (CANADAIR 41-341-038)		1
-37	602300-1	..INDICATOR - SEAT LEG GUARD RIGGING		1
-38	602299-1	..FIXTURE - SEAT LEG GUARD RIGGING		1
-39	602301-1	..SCREW		1
-40	MS35426-14	..NUT		1
		-OOO-		

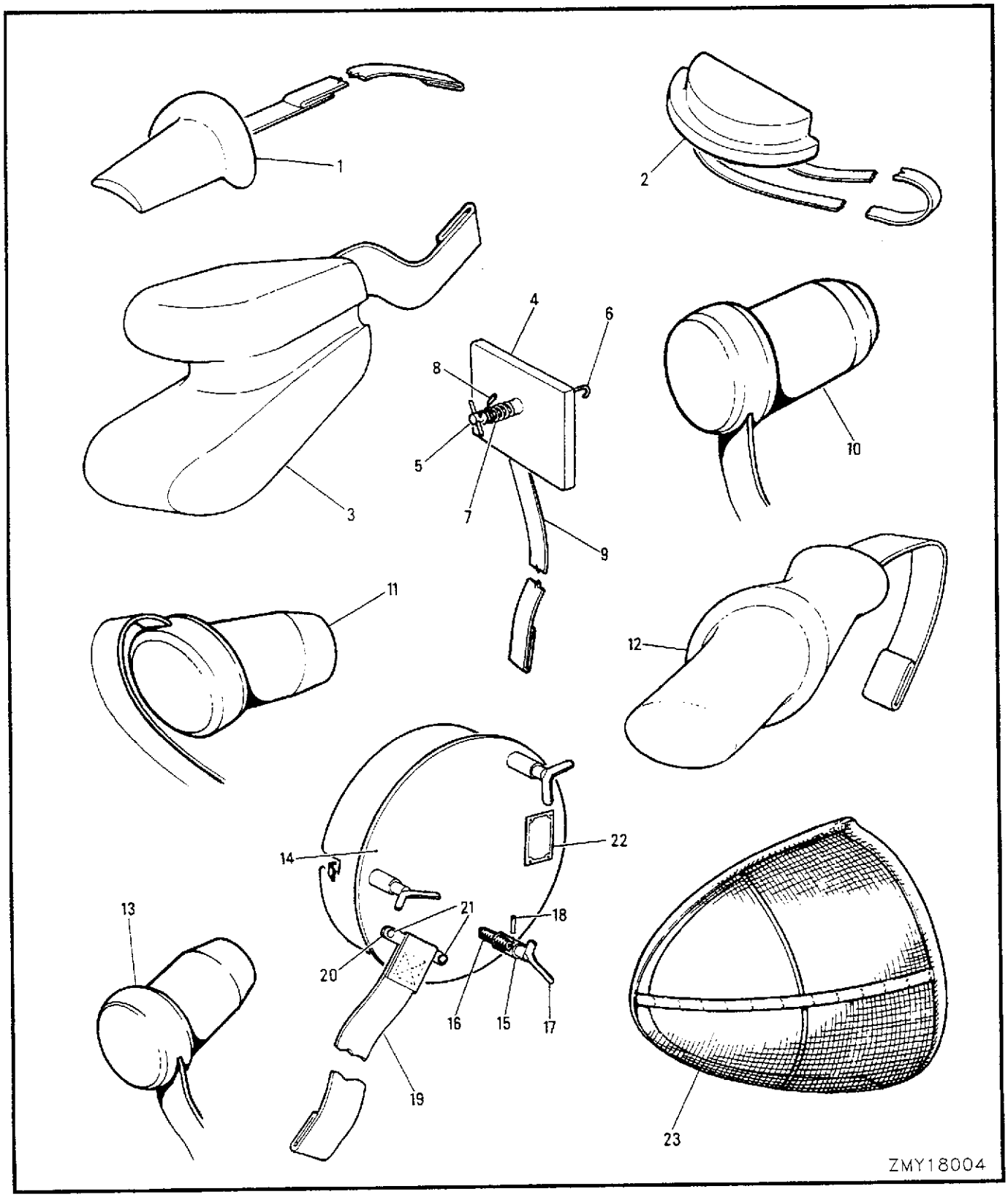

FIGURE 144 BLANKING PLUGS

FIGURE AND INDEX NUMBER	GROUP	SERVICE TOOLS	EFFEC-TIVITY	UNITS PER ASSY
	MAJOR ASSEMBLY	BLANKING PLUGS		
	PART NUMBER	1 2 3 4 5 6 7 NOMENCLATURE		
144 - 1	41-323-007-1	PLUG ASSY - RAM AIR INLET BLANKING		2
- 2	41-323-005-1A	PLUG ASSY - INTAKE DUCT BLANKING		2
- 3	41-323-018-1	PLUG ASSY - COOLING FLUSH SCOOP BLANKING		1
	41-323-017-1	PLUG ASSY - HEAT EXCHANGER WING ROOT STBD BLANKING		1
- 4	41-323-017-2	.PLUG		1
- 5	359770-1	.HANDLE ASSY		1
- 6	41-323-017-5	.HOOK ASSY		1
- 7	C720-072-2000	.SPRING		1
- 8	NAS561P3-9	.PIN		1
- 9	41-323-036-1	.STREAMER - WARNING		1
-10	41-323-016-1	PLUG ASSY - HEAT EXCHANGER OUTLET BLANKING		1
-11	41-323-010-1	PLUG ASSY - EXIT DUCT STA297 RH BLANKING		1
-12	41-323-009-1	PLUG ASSY - COMPRESSOR BLEED OUTLET BLKG		2
-13	41-323-008-1	PLUG ASSY - GENERATOR COOLING INLET BLKG		1
	360284-1	PLUG ASSY - TAIL PIPE BLANKING (CANADAIR 41-323-006-1)		1
-14	360283-1	.PLUG ASSY - WELDED		1
-14A	41-323-017-5	.HOOK ASSY		1
-14B	C720-072-2000	.SPRING		1
-14C	NAS561P3-9	.PIN		1
-15	360282-1	.PIN ASSY - LOCKING		3
-16	9-0810-11	.SPRING - (V15840)		3
-17	360281-1	.HANDLE ASSY - LOCKING		3
-18	NAS561P3-8	.PIN		3
-19	360280-1	.STREAMER ASSY - (MADE FROM 41-323-036-6)		1
-20	360279-1	.STRIP		1
R -21	MS35206-229	.SCREW		2
	AN960-3	.WASHER		2
	MS21042L06	.NUT		2
-22	360278-1	.NAMEPLATE - (MADE FROM RCAF 22368)		1
-23	8925056-1	SCREEN ASSY - AIR INTAKE LH & RH (37473)		2
	C64F46819-2	SCREEN ASSY - AIR INTAKE RH		1

-OOO-

PART 4

BULK MATERIAL CHART

TABLE OF CONTENTS

TITLE	PAGE
DRAIN SYSTEM	3
ELECTRICAL SYSTEM	4
ELECTRONIC SYSTEM	8
FUEL SYSTEM	9
HEAT & VENT & PRESSURIZATION SYSTEM	10
HYDRAULIC SYSTEM	12
OXYGEN SYSTEM	19
PITOT STATIC SYSTEM	20
TAPE	21
TRIM (INTERIOR)	22
MISCELLANEOUS	23

CURRENT SPECIFICATION	OBSOLETE SPECIFICATION	COMMERCIAL DESIGNATIONS			ADDITIONAL DATA
		AMERICAN		CANADIAN	
		OLD	NEW		
MIL-T-5695	57-180-3, GR LS, AN-WW-T-855, 44-T-27	18-8 TYPE 304 - HARDENED			TYPE 1 - SEAMLESS TYPE 2 - WELDED
MIL-T-6737	57-180-4, AN-WW-T-861, 44-T-26, AN-T-82	18-8 TYPE 321 OR TYPE 347 - STABILIZED			WELDED
MIL-T-6845	AN-T-86 AMS 5566	18-8 TYPE 304 - COLD DRAWN			HYDRAULIC
MIL-T-7081	AMS4083	61S	6061	65S-T6	SEAMLESS - HYDRAULIC
MIL-T-8504	AN-T-43 COMP 1 MIL-T-6846, SAE30304	18-8 TYPE 304 - ANNEALED			
MIL-T-8506	57-180-3, GR LS, AN-WW-T-855, 44-T-27	18-8 TYPE 304 - ANNEALED			TYPE 1 - SEAMLESS TYPE 2 - WELDED
MIL-T-8606	57-180-3, GR LSS, AN-WW-T-858 44-T-25, AN-T-43 COMP 2	18-8 TYPE 321 OR TYPE 347 - STABILIZED			TYPE 1 - SEAMLESS TYPE 2 - WELDED & DRAWN
WW-T-783	44-T-19, 57-186-1	2S	1100	2S	SEAMLESS - DRAWN
WW-T-785	44-T-28, 10235, MIL-T-5063. AMS 4086, AN-T-80 TYPES 1 TO 5, WW-T-786	24S -T3	2024	24S-T3	SEAMLESS - DRAWN
WW-T-787	57-186-3 44-T-32 AMS 4071	52S	5052	57S-0 57S-1/2H	SEAMLESS - DRAWN
WW-T-788	44-T-20	3S	3003	3S	
WW-T-789		61S	6061	65S-0	SEAMLESS - DRAWN
OBSOLETE MATERIAL	WW-T-790, 11327, 44-T-30	53S	6053	55S	SEAMLESS
WW-T-799		COPPER			SEAMLESS
C20-51 (RCAF)		COPPER			HIGH PRESSURE
		1S-1/2H			
		17S-T (WHEN STOCK DEPLETED USE 24S)			

195A4D01

CHART 3 SPECIFICATIONS-COMMERCIAL DESIGNATIONS OF TUBING

PART NUMBER	SIZE, GAUGE, STRAIGHT LENGTH	MATERIAL SPEC.	FITTINGS			
			SLEEVE	QTY	NUT	QTY
		DRAIN SYSTEM				
41A-44001-26	5/16 ID X 2	MIL-H-6000				
41A-44002-12	1/4 X .035 X	WW-T-789 65S-T6	MS20819-4	1	AN818-4D	1
41A-44002-14	3/8 X .035 X	WW-T-789 65S-T6	MS20819-6	1	AN818-6D	1
41A-44002-16	.032 X 3-3/4 X 9-1/2	QQ-A-362 HT T42	Alum Alloy			1
41A-44003-12	1/8 X .020 X 20	WW-T-787 57S-O	MS20819-2	1	AN818-2D	1
41A-44003-6	5/16 X .035 X 22	WW-T-787 57S-O 30B/963				
41A-44003-8	5/16 X .035 X 22	WW-T-787 57S-O 30B/963				

PART NUMBER	SIZE, GAUGE, STRAIGHT LENGTH	MATERIAL SPEC.	FITTINGS			
			SLEEVE	QTY	NUT	QTY
		ELECTRICAL SYSTEM				
S1244B	AS REQUIRED	MIL-I-7444 TYPE II	FLEXIBLE TUBE		PLASTIC	
S1244B10-44	3/8 ID X 44	MIL-I-7444 TYPE II	FLEXIBLE TUBE		PLASTIC	
S1244B11-176	.330 ID X 176	MIL-I-7444 TYPE II	FLEXIBLE TUBE		PLASTIC	
S1244B11-18	.330 ID X 18	MIL-I-7444 TYPE II	FLEXIBLE TUBE		PLASTIC	
S1244B11-30	.330 ID X 30	MIL-I-7444 TYPE II	FLEXIBLE TUBE		PLASTIC	
S1244B11-34	.330 ID X 34	MIL-I-7444 TYPE II	FLEXIBLE TUBE		PLASTIC	
S1244B11-41	.330 ID X 41	MIL-I-7444 TYPE II	FLEXIBLE TUBE		PLASTIC	
S1244B12-14	.294 ID X 14	MIL-I-7444 TYPE II	FLEXIBLE TUBE		PLASTIC	
S1244B12-15	.294 ID X 15	MIL-I-7444 TYPE II	FLEXIBLE TUBE		PLASTIC	
S1244B12-16	.294 ID X 16	MIL-I-7444 TYPE II	FLEXIBLE TUBE		PLASTIC	
S1244B12-40	.294 ID X 40	MIL-I-7444 TYPE II	FLEXIBLE TUBE		PLASTIC	
S1244B12-42	.294 ID X 42	MIL-I-7444 TYPE II	FLEXIBLE TUBE		PLASTIC	
S1244B12-55	.294 ID X 55	MIL-I-7444 TYPE II	FLEXIBLE TUBE		PLASTIC	
S1244B13-1-1/2	.263 ID X 1-1/2	MIL-I-7444 TYPE II	FLEXIBLE TUBE		PLASTIC	
S1244B13-10	.263 ID X 10	MIL-I-7444 TYPE II	FLEXIBLE TUBE		PLASTIC	
S1244B13-11	.263 ID X 11	MIL-I-7444 TYPE II	FLEXIBLE TUBE		PLASTIC	
S1244B13-12	.263 ID X 12	MIL-I-7444 TYPE II	FLEXIBLE TUBE		PLASTIC	
S1244B13-14	.263 ID X 14	MIL-I-7444 TYPE II	FLEXIBLE TUBE		PLASTIC	
S1244B14-22	.234 ID X 22	MIL-I-7444 TYPE II	FLEXIBLE TUBE		PLASTIC	
S1244B14-3	.234 ID X 3	MIL-I-7444 TYPE II	FLEXIBLE TUBE		PLASTIC	
S1244B14-79	.234 ID X 79	MIL-I-7444 TYPE II	FLEXIBLE TUBE		PLASTIC	
S1244B15-17	.208 ID X 17	MIL-I-7444 TYPE II	FLEXIBLE TUBE		PLASTIC	
S1244B15-6	.208 ID X 6	MIL-I-7444 TYPE II	FLEXIBLE TUBE		PLASTIC	
S1244B16-1-1/2	.186 ID X 1-1/2	MIL-I-7444 TYPE II	FLEXIBLE TUBE		PLASTIC	
S1244B16-10	.186 ID X 10	MIL-I-7444 TYPE II	FLEXIBLE TUBE		PLASTIC	
S1244B16-13	.186 ID X 13	MIL-I-7444 TYPE II	FLEXIBLE TUBE		PLASTIC	
S1244B16-24	.186 ID X 24	MIL-I-7444 TYPE II	FLEXIBLE TUBE		PLASTIC	
S1244B16-29	.186 ID X 29	MIL-I-7444 TYPE II	FLEXIBLE TUBE		PLASTIC	
S1244B16-38	.186 ID X 38	MIL-I-7444 TYPE II	FLEXIBLE TUBE		PLASTIC	

PART NUMBER	SIZE, GAUGE, STRAIGHT LENGTH	MATERIAL SPEC.	FITTINGS			
			SLEEVE	QTY	NUT	QTY
	ELECTRICAL SYSTEM (CONTINUED)					
S1244B16-7	.186 ID X 7	MIL-I-7444 TYPE II	FLEXIBLE TUBE		PLASTIC	
S1244B16-8	.186 ID X 8	MIL-I-7444 TYPE II	FLEXIBLE TUBE		PLASTIC	
S1244B18-4	.148 ID X 4	MIL-I-7444 TYPE II	FLEXIBLE TUBE		PLASTIC	
S1244B18-59-1/2	.148 ID X 59-1/2	MIL-I-7444 TYPE II	FLEXIBLE TUBE		PLASTIC	
S1244B19-30	.133 ID X 30	MIL-I-7444 TYPE II	FLEXIBLE TUBE		PLASTIC	
S1244B20-9-1/2	.118 ID X 9-1/2	MIL-I-7444 TYPE II	FLEXIBLE TUBE		PLASTIC	
S1244B27-1	.053 ID X 1	MIL-I-7444 TYPE II	FLEXIBLE TUBE		PLASTIC	
S1244B30-1	.034 ID X 1	MIL-I-7444 TYPE II	FLEXIBLE TUBE		PLASTIC	
S1244B30-1-1/2	.034 ID X 1-1/2	MIL-I-7444 TYPE II	FLEXIBLE TUBE		PLASTIC	
S1244B4-12-1/2	1 ID X 12-1/2	MIL-I-7444 TYPE II	FLEXIBLE TUBE		PLASTIC	
S1244B6-10	3/4 ID X 10	MIL-I-7444 TYPE II	FLEXIBLE TUBE		PLASTIC	
S1244B6-11	3/4 ID X 11	MIL-I-7444 TYPE II	FLEXIBLE TUBE		PLASTIC	
S1244B7-10	5/8 ID X 10	MIL-I-7444 TYPE II	FLEXIBLE TUBE		PLASTIC	
S1244B7-11	5/8 ID X 11	MIL-I-7444 TYPE II	FLEXIBLE TUBE		PLASTIC	
S1244B7-12	5/8 ID X 12	MIL-I-7444 TYPE II	FLEXIBLE TUBE		PLASTIC	
S1244B7-15	5/8 ID X 15	MIL-I-7444 TYPE II	FLEXIBLE TUBE		PLASTIC	
S1244B7-20	5/8 ID X 20	MIL-I-7444 TYPE II	FLEXIBLE TUBE		PLASTIC	
S1244B7-21	5/8 ID X 21	MIL-I-7444 TYPE II	FLEXIBLE TUBE		PLASTIC	
S1244B7-24	5/8 ID X 24	MIL-I-7444 TYPE II	FLEXIBLE TUBE		PLASTIC	
S1244B7-29	5/8 ID X 29	MIL-I-7444 TYPE II	FLEXIBLE TUBE		PLASTIC	
S1244B7-83	5/8 ID X 83	MIL-I-7444 TYPE II	FLEXIBLE TUBE		PLASTIC	
S1244B8-21	1/2 ID X 21	MIL-I-7444 TYPE II	FLEXIBLE TUBE		PLASTIC	
S1244B8-48	1/2 ID X 48	MIL-I-7444 TYPE II	FLEXIBLE TUBE		PLASTIC	
S1244B9-5-1/4	.438 ID X 5-1/4	MIL-I-7444 TYPE II	FLEXIBLE TUBE		PLASTIC	
S1244D	AS REQUIRED	MIL-I-3190 CLASS A-B-2	COTTON		SLEEVE	
S1244D12-3	.294 ID X 3	MIL-I-3190 CLASS A-B-2	COTTON		SLEEVE	
S1244D8-3	1/2 ID X 3	MIL-I-3190 CLASS A-B-2	COTTON		SLEEVE	

PART NUMBER	SIZE, GAUGE, STRAIGHT LENGTH	MATERIAL SPEC.	FITTINGS			
			SLEEVE	QTY	NUT	QTY
	ELECTRICAL SYSTEM (CONTINUED)					
S1244D9-3	.438 ID X 3	MIL-I-3190 CLASS A-B-2	COTTON		SLEEVE	
S1244E	AS REQUIRED	MIL-I-3190 CLASS H-B-1	FIBERGLAS		SLEEVE	
S1244E11-18	.330 ID X 18	MIL-I-3190 CLASS H-B-I	FIBERGLAS		SLEEVE	
S1244E11-48	.330 ID X 48	MIL-I-3190 CLASS H-B-1	FIBERGLAS		SLEEVE	
S1244E12-42	.294 ID X 42	MIL-I-3190 CLASS H-B-1	FIBERGLAS		SLEEVE	
S1244E15-10	.208 ID X 10	MIL-I-3190 CLASS H-B-1	FIBERGLAS		SLEEVE	
S1244E15-17	.208 ID X 17	MIL-I-3190 CLASS H-B-1	FIBERGLAS		SLEEVE	
S1244E16-28-1/2	.186 ID X 28-1/2	MIL-I-3190 CLASS H-B-1	FIBERGLAS		SLEEVE	
S1244E19-14	.133 ID X 14	MIL-I-3190 CLASS H-B-1	FIBERGLAS		SLEEVE	
S1244E19-29	.133 X 29	MIL-I-3190 CLASS H-B-1	FIBERGLAS		SLEEVE	
S1244E8-12	1/2 ID X 12	MIL-I-3190 CLASS H-B-1	FIBERGLAS		SLEEVE	
S1244F16-9	.186 ID X 9	MIL-I-3190 CLASS B-B-1	FIBERGLAS		SLEEVE	
S1244F9-3	.438 ID X 3	MIL-I-3190 CLASS B-B-1	FIBERGLAS		SLEEVE	
S4905	.313 IN. WIDE	L-P-349 TYPE III H2	COLORLESS ACETATE		CELLULOSE	
S4905-00116	1.5 IN. LONG	L-P-349 TYPE III H2	COLORLESS		CELLULOSE	
S4905-002	2 IN. LONG	L-P-349 TYPE III H2	COLORLESS		CELLULOSE	
S4905-006	6 IN. LONG	L-P-349 TYPE III H2	COLORLESS ACETATE		CELLULOSE	
41A-42112-56	1/4 X .028 X .56	WW-T-787 57S-O 30B/557	TUBE			
41A-42143	3/4 X .035 X	WW-T-789 65S-O				
41A-42144	3/4 X .035 X	WW-T-789 65S-O				
41A-42147	3/8 X .028 X 15-1/4	WW-T-787 57S-O 30B/968				

PART NUMBER	SIZE, GAUGE, STRAIGHT LENGTH	MATERIAL SPEC.	FITTINGS			
			SLEEVE	QTY	NUT	QTY
ELECTRICAL SYSTEM						
41A-42148	3/8 X .028 X 15.85	WW-T-787 57S-0 30B/968				
41A-42151-10	1/2 X .028 X 42	WW-T-789 65S-T4				
41A-42151-12	1/2 X .028 X 47-1/4	WW-T-789 65S-T4				
41A-42151-14	1/2 X .028 X 59.90	WW-T-789 65S-T4				
41A-51000-28	5/16 ID X 1/2 X	AMS 3207 SHORE HARD 25-35	SYNTHETIC RUBBER			
41A-51000-30	5/16 OD X .028 X	MIL-T-8506	CRE/ST		TYPE 304	
41A-51000-32	5/16 OD X .028 X	MIL-T-8506	CRE/ST		TYPE 304	
41A-51000-34	5/16 OD X .242 X	MPS-184-40	NYLON			
41A-51000-35	5/16 OD X .242 X	MPS-184-40	NYLON			
41A-51000-36	5/16 ID X 3/32 X	AMS 3207 SHORE HARD 25-35	SYNTHETIC RUBBER			
DELETED						
DELETED						

PART NUMBER	SIZE, GAUGE, STRAIGHT LENGTH	MATERIAL SPEC.	FITTINGS			
			SLEEVE	QTY	NUT	QTY
FUEL SYSTEM						
S1244B30-1	.034 ID x 1	MIL-T-7444 TYPE II	FLEXIBLE TUBE		PLASTIC	

PART NUMBER	SIZE, GAUGE, STRAIGHT LENGTH	MATERIAL SPEC.	FITTINGS			
			SLEEVE	QTY	NUT	QTY
		FUEL SYSTEM				
41A-65200-27	2-3/4 ID X 3-1/2	MIL-H-6000				
41A-65200-38	3/8 X 0.035	WW-T-785 24S-T3 30B/838				
41A-65201-2	1 ID X 3-1/2	MIL-H-6000				
41A-65201-4	1 ID X 4	MIL-H-6000				
41A-65201-6	2-3/4 ID X 3-1/2	MIL-H-6000				
41A-65201-75	3/8 X 0.035	WW-T-789 65S-T6				
41A-65201-8	3/8 X 0.035	WW-T-785 24S-T3 30B/838				
41A-65202-24	3/8 X 0.035	WW-T-789 65S-T6				
41A-65202-25	3/8 X 0.035	WW-T-789 65S-T6				
41A-65202-31	3/8 ID X 3	MIL-H-6000				
41A-65202-46	3/8 X 0.035	WW-T-789 65S-T6				
41A-65202-47	3/8 X 0.035	WW-T-789 65S-T6				
41A-65209-38	3/8 X 0.035	5052-0 WW-T-700/4	MS21922-6	1	MS21921-6D	1
41A-65243-27	3/8 ID X 3-1/2	MIL-H-6000				
41A-65400-30	3/8 X 0.035	WW-T-789 65S-T6	MS20819-6	2	AN818-6D	2
41A-65501-24	1/4 ID X 3-1/2	MIL-H-6000				
41A-65501-26	1 ID X 3-1/2	MIL-H-6000				
41A-65501-52	5/8 ID X 3-1/2	MIL-H-6000				
41A-65501-54	1-1/4 ID X 3-1/2	MIL-H-6000				
41A-65514-10	5/8 X 0.049 X 6.0	WW-T-789 65S-T6	MS20819-10	1	AN818-10D	1
41A-65514-4	5/8 X 0.035 X 17	WW-T-789 65S-0 30B/1957	MS20819-10	1	AN818-10D	1
41A-65514-6	1/4 X 0.028 X 9	WW-T-789 65S-T6	MS20819-4	1	AN818-4D	1
41A-65514-8	1/4 X 0.028 X 70	WW-T-789 65S-T6	MS20819-4	1	AN818-4D	1

PART NUMBER	SIZE, GAUGE, STRAIGHT LENGTH	MATERIAL SPEC.	FITTINGS			
			SLEEVE	QTY	NUT	QTY
	HEAT & VENT & PRESSURIZATION SYSTEM					
S1286-12-12	1-1/2 X .06 X 3		GLASS CLOTH TUBE		RUBBER IMPREGNATED	
	DELETED					
S1286-12-65	1-1/2 X .06 X 16-1/4		GLASS CLOTH TUBE		RUBBER IMPREGNATED	
S1286-14-12	1-3/4 X .06 X 3		GLASS CLOTH TUBE		RUBBER IMPREGNATED	
S1286-20-12	2-1/2 X .06 X 3		GLASS CLOTH TUBE		RUBBER IMPREGNATED	
S1286-5-10	5/8 X .06 X 2-1/2		GLASS CLOTH TUBE		RUBBER IMPREGNATED	
S1286-5-8	5/8 X .06 X 2		GLASS CLOTH TUBE		RUBBER IMPREGNATED	
S1286-6-10	3/4 X .06 X 2-1/2		GLASS CLOTH TUBE		RUBBER IMPREGNATED	
S1286-6-8	3/4 X .06 X 2		GLASS CLOTH TUBE		RUBBER IMPREGNATED	
41A-42000-118	1/4 ID X 2.3	MIL-H-6000				
41A-42000-83	1/16 X 1 IN. WIDE	HH-C-576 CLASS 2 TYPE 2B	CORK			
41A-42200-84	5/8 ID X 16	MIL-H-5581				
41A-42200-88	5/8 ID X 13	MIL-H-5581				
41A-95218-10	1/4 X .028 X 8	WW-T-787 57S-0 30B/557	MS20819-4	2	AN818-4D	2
41A-95218-12	1/4 X .028 X 8	WW-T-787 57S-0 30B/557	MS20819-4	2	AN818-4D	2
41A-95218-14	1/4 X .028 X 18	WW-T-787 57S-0 30B/557	MS21922-4 MS20819-4	1 1	MS21921-4D AN818-4D	1 1
41A-95218-16	1 X .028 X 17	WW-T-787 57S-0	MS20819-16	1	AN818-16D	1
	DELETED					
41A-95218-26	1 X .028 X 25	WW-T-787 57S-0	MS20819-16	2	AN818-16D	2
41A-95218-28	1 X .028 X 25	WW-T-787 57S-0	MS20819-16	2	AN818-16D	2
41A-95218-30	1 X .028 X 3	WW-T-787 57S-0	MS20819-16	2	AN818-16D	2
41A-95218-32	1/4 X .028 X 2	WW-T-787 57S-0 30B/557	MS20819-4	2	AN818-4D	2
	DELETED					
41A-95218-36	1 X .028 X 15	WW-T-787 57S-0	MS20819-16	2	AN818-16D	2
41A-95218-38	1 X .028 X 8	WW-T-787 57S-0	MS20819-16	2	AN818-16D	2
41A-95218-40	5/8 X .035 X 30	WW-T-787 57S-0 30B/981	MS20819-10	2	AN818-10D	2
41A-95218-42	5/8 X .035 X 20	WW-T-787 57S-0 30B/981	MS20819-10	2	AN818-10D	2

PART NUMBER	SIZE, GAUGE, STRAIGHT LENGTH	MATERIAL SPEC.	FITTINGS			
			SLEEVE	QTY	NUT	QTY
	HEAT & VENT & PRESSURIZATION SYSTEM (CONTINUED)					
	DELETED					
41A-95218-48	5/8 X .028 X 60	WW-T-787 57S-0 30B/982	MS20819-10	2	AN818-10D	2
41A-95218-50	5/8 X .028 X 50	WW-T-787 57S-0 30B/982	MS20819-10	2	AN818-10D	2
41A-95218-52	1 X .028 X	WW-T-787 57S-0	MS20819-16	2	AN818-16D	2
41A-95218-6	1/4 X .028 X 12	WW-T-787 57S-0 30B/557	MS20819-4	2	AN818-4D	2
41A-95218-8	1/4 X .028 X 21	WW-T-787 57S-0 30B/557	MS20819-4	2	AN818-4D	2
41A-97201-10	1/4 X .030 X 7-1/2	MPS 184-40 NYLON	MS20819-4	2	AN818-4D	2
41A-97201-12	1/4 X .028 X 8-1/2	WW-T-787 57S-0 30B/557	MS20819-4	1	AN818-4D	1
41A-97201-3	1/4 X .028 X 8-1/2	WW-T-787 57S-0 30B/557	MS20819-4	1	AN818-4D	1
41A-97201-4	1/4 X .030 X 41	MPS 184-40 NYLON	MS20819-4	2	AN818-4D	2
41A-97201-6	1/4 X .030 X 8-1/2	MPS 184-40 NYLON	MS20819-4	2	AN818-4D	2
41A-97201-8	1/4 X .030 X 7	MPS 184-40 NYLON	MS20819-4	2	AN818-4D	2
683204		1660-21-841-5601	COUPLING			

PART NUMBER	SIZE, GAUGE, STRAIGHT LENGTH	MATERIAL SPEC.	FITTINGS			
			SLEEVE	QTY	NUT	QTY
		HYDRAULIC SYSTEM				
S4905-020	.313 IN. WIDE X 20	L-P-349 TYPE III H2	COLORLESS ACETATE		CELLULOSE	
41A-42306-50	3/4 ID X 14-1/4	MIL-I-7444 TYPE II	FLEXIBLE TUBE		PLASTIC	
41A-42306-58	2 X 3	COMMERCIAL	TEMPERATURE RESISTING		TAPE	
41A-42324-10	1/4 X 0.035	WW-T-78965S-T6	MS21922-4	2	MS21921-4D	2
41A-42324-12	1/4 X 0.035	WW-T-78965S-T6	MS21922-4	2	MS21921-4D	2
41A-42324-14	1/4 X 0.035	WW-T-78965S-T6	MS21922-4	2	MS21921-4D	2
41A-42324-16	1/4 X 0.035	WW-T-78965S-T6	MS21922-6	2	MS21921-6D	2
41A-42324-18	1/4 X 0.035	WW-T-78965S-T6	MS21922-6	2	MS21921-6D	2
41A-42324-2	3/8 X 0.035	WW-T-78965S-T6	MS21922-6	2	MS21921-6D	2
41A-42324-20	1/4 X 0.035	WW-T-78965S-T6	MS21922-4	2	MS21921-4D	2
41A-42324-22	1/4 X 0.035	WW-T-78965S-T6	MS21922-4	2	MS21921-4D	2
41A-42324-24	1/4 X 0.035	WW-T-78965S-T6	MS21922-4	2	MS21921-4D	2
41A-42324-26	1/4 X 0.035	WW-T-78965S-T6	MS21922-4	2	MS21921-4D	2
41A-42324-32	3/8 X 0.035	WW-T-78965S-T6	MS21922-6	2	MS21921-6D	2
41A-42324-34	3/8 X 0.035	WW-T-78965S-T6	MS21922-6	2	MS21921-6D	2
41A-42324-36	3/8 X 0.035	WW-T-78965S-T6	MS21922-6	2	MS21921-6D	2
41A-42324-38	3/8 X 0.035	WW-T-78965S-T6	MS21922-6	2	MS21921-6D	2
41A-42324-4	3/8 X 0.035	WW-T-78965S-T6	MS21922-6	2	MS21921-6D	2
41A-42324-40	1/4 X 0.035	WW-T-78965S-T6	MS21922-4	2	MS21921-4D	2
41A-42324-42	1/4 X 0.035	WW-T-78965S-T6	MS21922-4	2	MS21921-4D	2
41A-42324-44	1/4 X 0.035	WW-T-78965S-T6	MS21922-4	2	MS21921-4D	2
41A-42324-46	1/4 X 0.035	WW-T-78965S-T6	MS21922-4	2	MS21921-4D	2
41A-42324-52	3/8 X 0.035	WW-T-78965S-T6	MS21922-6	2	MS21921-6D	2
41A-42324-54	3/8 X 0.035	WW-T-78965S-T6	MS21922-6	2	MS21921-6D	2
41A-42324-56	1/4 X 0.035	WW-T-78965S-T6	MS21922-4	2	MS21921-4D	2
41A-42324-58	1/4 X 0.035	WW-T-78965S-T6	MS21922-4	2	MS21921-4D	2
41A-42324-6	3/8 X 0.035	WW-T-78965S-T6	MS21922-6	2	MS21921-6D	2
41A-42324-60	1/4 X 0.035	WW-T-78965S-T6	MS21922-4	2	MS21921-4D	2
41A-42324-62	1/4 X 0.035	WW-T-78965S-T6	MS21922-4	2	MS21921-4D	2
41A-42324-64	1/4 X 0.035	WW-T-78965S-T6	MS21922-4	2	MS21921-4D	2
41A-42324-66	1/4 X 0.035	WW-T-78965S-T6	MS21922-4	2	MS21921-4D	2

PART NUMBER	SIZE, GAUGE, STRAIGHT LENGTH	MATERIAL SPEC.	FITTINGS			
			SLEEVE	QTY	NUT	QTY
HYDRAULIC SYSTEM (CONTINUED)						
41A-42324-68	1/4 X 0.035	WW-T-78965S-T6	MS21922-4	2	MS21921-4D	2
41A-42324-70	3/8 X 0.035	WW-T-78965S-T6	MS21922-6	2	MS21921-6D	2
41A-42324-74	3/8 X 0.035	WW-T-78965S-T6	MS21922-6	2	MS21921-6D	2
41A-42324-76	3/8 X 0.035	WW-T-78965S-T6	MS21922-6	2	MS21921-6D	2
41A-42324-78	3/8 X 0.035	WW-T-78965S-T6	MS21922-6	2	MS21921-6D	2
41A-42324-8	3/8 X 0.035	WW-T-78965S-T6	MS21922-6	2	MS21921-6D	2
41A-42324-80	3/8 X 0.035	WW-T-78965S-T6	MS21922-6	2	MS21921-6D	2
41A-42324-84	3/8 X 0.035	WW-T-78965S-T6	MS21922-6	2	MS21921-6D	2
41A-42324-86	1/4 X 0.035	WW-T-78965S-T6	MS21922-4	2	MS21921-4D	2
41A-42324-88	1/4 X 0.035	WW-T-78965S-T6	MS21922-4	2	MS21921-4D	2
41A-42325-14	1/4 X 0.035	WW-T-78965S-T6	MS21922-4	2	MS21921-4D	2
41A-42325-16	1/4 X 0.035	WW-T-78965S-T6	MS21922-4	2	MS21921-4D	2
41A-42325-18	1/4 X 0.035	WW-T-78965S-T6	MS21922-4	2	MS21921-4D	2
41A-42325-2	1/4 X 0.035	WW-T-78965S-T6	MS21922-4	2	MS21921-4D	2
41A-42325-20	1/4 X 0.035	WW-T-78965S-T6	MS21922-4	2	MS21921-4D	2
41A-42325-22	1/4 X 0.035	WW-T-78965S-T6	MS21922-4	2	MS21921-4D	2
41A-42325-24	1/4 X 0.035	WW-T-78965S-T6	MS21922-4	2	MS21921-4D	2
41A-42325-30	1/4 X 0.035	WW-T-78965S-T6	MS21922-4	2	MS21921-4D	2
41A-42325-32	1/4 X 0.035	WW-T-78965S-T6	MS21922-4	2	MS21921-4D	2
41A-42325-34	1/4 X 0.035	WW-T-78965S-T6	MS21922-4	2	MS21921-4D	2
41A-42325-36	1/4 X 0.035	WW-T-78965S-T6	MS21922-4	2	MS21921-4D	2
41A-42325-38	1/4 X 0.035	WW-T-78965S-T6	MS21922-4	2	MS21921-4D	2
41A-42325-4	1/4 X 0.035	WW-T-78965S-T6	MS21922-4	2	MS21921-4D	2
41A-42325-40	1/4 X 0.035	WW-T-78965S-T6	MS21922-4	2	MS21921-4D	2
41A-42325-42	1/4 X 0.035	WW-T-78965S-T6	MS21922-4	2	MS21921-4D	2
41A-42325-44	1/4 X 0.035	WW-T-78965S-T6	MS21922-4	2	MS21921-4D	2
41A-42325-46	1/4 X 0.035	WW-T-78965S-T6	MS21922-4	2	MS21921-4D	2
41A-42325-48	1/4 X 0.035	WW-T-78965S-T6	MS21922-4	2	MS21921-4D	2
41A-42325-50	1/4 X 0.035	WW-T-78965S-T6	MS21922-4	2	MS21921-4D	2
41A-42325-52	1/4 X 0.035	WW-T-78965S-T6	MS21922-4	2	MS21921-4D	2

PART NUMBER	SIZE, GAUGE, STRAIGHT LENGTH	MATERIAL SPEC.	FITTINGS			
			SLEEVE	QTY	NUT	QTY
HYDRAULIC SYSTEM (CONTINUED)						
41A-42325-54	1/4 X 0.035	WW-T-78965S-T6	MS21922-4	2	MS21921-4D	2
41A-42325-56	1/4 X 0.035	WW-T-78965S-T6	MS21922-4	2	MS21921-4D	2
41A-42325-58	1/4 X 0.035 x 10	WW-T-78965S-T6	MS21922-4	2	MS21921-4D	2
41A-42325-6	1/4 X 0.035	WW-T-78965S-T6	MS21922-4	2	MS21921-4D	2
41A-42325-60	1/4 X 0.035 x 6	WW-T-78965S-T6	MS21922-4	2	MS21921-4D	2
41A-42325-62	1/4 X 0.035 x 20	WW-T-78965S-T6	MS21922-6	2	MS21921-6D	2
41A-42325-64	1/4 X 0.035 x 22	WW-T-78965S-T6	MS21922-6	2	MS21921-6D	2
41A-42325-66	1/4 X 0.035 x 10	WW-T-78965S-T6	MS21922-4	2	MS21921-4D	2
41A-42325-68	1/4 X 0.035 x 6	WW-T-78965S-T6	MS21922-4	2	MS21921-4D	2
41A-42325-70	1/4 X 0.035 x 20	WW-T-78965S-T6	MS21922-6	2	MS21921-6D	2
41A-42325-72	1/4 X 0.035 x 22	WW-T-78965S-T6	MS21922-6	2	MS21921-6D	2
41A-42325-74	1/4 X 0.035	WW-T-78965S-T6	MS21922-4	2	MS21921-4D	2
41A-42325-76	1/4 X 0.035	WW-T-78965S-T6	MS21922-4	2	MS21921-4D	2
41A-42325-8	1/4 X 0.035	WW-T-78965S-T6	MS21922-4	2	MS21921-4D	2
41A-42326-10	1/4 X 0.035 x 30	WW-T-78965S-T6	MS21922-4	2	MS21921-4D	2
41A-42326-12	1/4 X 0.035 x 12	WW-T-78965S-T6	MS21922-4	2	MS21921-4D	2
41A-42326-14	1/4 X 0.035 x 22	WW-T-78965S-T6	MS21922-4	2	MS21921-4D	2
41A-42326-2	1/4 X 0.035 x 12	WW-T-78965S-T6	MS21922-4	2	MS21921-4D	2
41A-42326-22	1/4 X 0.035 x 13	WW-T-78965S-T6	MS21922-4	2	MS21921-4D	2
41A-42326-24	1/4 X 0.035 x 55	WW-T-78965S-T6	MS21922-4	2	MS21921-4D	2
41A-42326-26	1/4 X 0.035 x 60	WW-T-78965S-T6	MS21922-4	2	MS21921-4D	2
41A-42326-30	1/4 X 0.035 x 28	WW-T-78965S-T6	MS21922-4	2	MS21921-4D	2
41A-42326-32	1/4 X 0.035 x 11	WW-T-78965S-T6	MS21922-4	2	MS21921-4D	2
41A-42326-34	1/4 X 0.035 x 29	WW-T-78965S-T6	MS21922-4	2	MS21921-4D	2
41A-42326-36	1/4 X 0.035 x 29	WW-T-78965S-T6	MS21922-4	2	MS21921-4D	2
41A-42326-38	1/4 X 0.035 x 50	WW-T-78965S-T6	MS21922-4	2	MS21921-4D	2
41A-42326-4	1/4 X 0.035 x 14	WW-T-78965S-T6	MS21922-4	2	MS21921-4D	2
41A-42326-42	1/4 X 0.035 x 68	WW-T-78965S-T6	MS21922-4	2	MS21921-4D	2
41A-42326-44	1/4 X 0.035 x 38	WW-T-78965S-T6	MS21922-4	2	MS21921-4D	2

PART NUMBER	SIZE, GAUGE, STRAIGHT LENGTH	MATERIAL SPEC.	FITTINGS			
			SLEEVE	QTY	NUT	QTY
HYDRAULIC SYSTEM (CONTINUED)						
41A-42326-46	1/4 X 0.035 x 76	WW-T-78965S-T6	MS21922-4	2	MS21921-4D	2
41A-42326-50	1/4 X 0.035 x 15	WW-T-78965S-T6	MS21922-6	2	MS21921-6D	2
41A-42326-52	1/4 X 0.035 x 14	WW-T-78965S-T6	MS21922-6	2	MS21921-6D	2
41A-42326-54	1/4 X 0.035 x 28	WW-T-78965S-T6	MS21922-6	2	MS21921-6D	2
41A-42326-56	1/4 X 0.035 x 80	WW-T-78965S-T6	MS21922-6	2	MS21921-6D	2
41A-42326-6	1/4 X 0.035 X 9	WW-T-78965S-T6	MS21922-4	2	MS21921-4D	2
41A-42326-62	3/8 X 0.035 X 28	WW-T-78965S-T6	MS21922-6	2	MS21921-6D	2
41A-42326-64	3/8 X 0.035 X 52	WW-T-78965S-T6	MS21922-6	2	MS21921-6D	2
41A-42326-66	3/8 X 0.035 X 84	WW-T-78965S-T6	MS21922-6	2	MS21921-6D	2
41A-42326-68	3/8 X 0.035 X 80	WW-T-78965S-T6	MS21922-6	2	MS21921-6D	2
41A-42326-70	3/8 X 0.035 X 86	WW-T-78965S-T6	MS21922-6	2	MS21921-6D	2
41A-42326-72	1/4 X 0.035 X 15	WW-T-78965S-T6	MS21922-4	2	MS21921-4D	2
41A-42326-74	1/4 X 0.035	WW-T-78965S-T6	MS21922-4	2	MS21921-4D	2
41A-42326-76	1/4 X 0.035	WW-T-78965S-T6	MS21922-4	2	MS21921-4D	2
41A-42326-78	1/4 X 0.035	WW-T-78965S-T6	MS21922-4	2	MS21921-4D	2
41A-42326-8	1/4 X 0.035 X 30	WW-T-78965S-T6	MS21922-4	2	MS21921-4D	2
41A-42326-80	1/4 X 0.035	WW-T-78965S-T6	MS21922-4	2	MS21921-4D	2
41A-42326-82	1/4 X 0.035 X 30	WW-T-78965S-T6	MS21922-4	2	MS21921-4D	2
41A-42326-84	1/4 X 0.035 X 45	WW-T-78965S-T6	MS21922-4	2	MS21921-4D	2
41A-42326-86	3/8 X 0.035 X 90	WW-T-78965S-T6	MS21922-6	2	MS21921-6D	2
41A-42326-88	3/8 X 0.035 X 30	WW-T-78965S-T6	MS21922-6	2	MS21921-6D	2
41A-42326-90	3/8 X 0.035 X 50	WW-T-78965S-T6	MS21922-6	2	MS21921-6D	2
41A-42327-10	3/8 X 0.035 X 65	WW-T-78965S-T6	MS21922-6	2	MS21921-6D	2
41A-42327-12	3/8 X 0.035 X 30	WW-T-78965S-T6	MS21922-6	2	MS21921-6D	2
41A-42327-14	3/8 X 0.035 X 65	WW-T-78965S-T6	MS21922-6	2	MS21921-6D	2
41A-42327-16	3/8 X 0.035 X 70	WW-T-78965S-T6	MS21922-6	2	MS21921-6D	2
41A-42327-18	3/8 X 0.035 X 35	WW-T-78965S-T6	MS21922-6	2	MS21921-6D	2
41A-42327-20	3/8 X 0.035 X 70	WW-T-78965S-T6	MS21922-6	2	MS21921-6D	2
41A-42327-22	1/4 X 0.035 X 11-1/2	WW-T-78965S-T6	MS21922-4	2	MS21921-4D	2
41A-42327-24	3/8 X 0.035 X 13-1/2	WW-T-78965S-T6	MS21922-6	2	MS21921-6D	2

PART NUMBER	SIZE, GAUGE, STRAIGHT LENGTH	MATERIAL SPEC.	FITTINGS			
			SLEEVE	QTY	NUT	QTY
HYDRAULIC SYSTEM (CONTINUED)						
41A-42327-26	1/4 X 0.035 X 11	WW-T-78965S-T6	MS21922-4	2	MS21921-4D	2
41A-42327-38	1/4 X 0.035 X 8	WW-T-78965S-T6	MS21922-4	2	MS21921-4	2
41A-42327-40	1/4 X 0.035 X 7.62	WW-T-78965S-T6	MS21922-4	2	MS21921-4	2
41A-42327-8	1/4 X 0.035 X 11	WW-T-78965S-T6	MS21922-4	2	MS21921-4D	2
41A-42333-100	3/8 X 0.028 X 30	WW-T-78965S-T6	MS21922-6	2	MS21921-6	2
41A-42333-12	1/4 X 0.035 X 17	WW-T-78965S-T6	MS21922-4	2	MS21921-4D	2
41A-42333-14	1/4 X 0.035 X 10	WW-T-78965S-T6	MS21922-4	2	MS21921-4D	2
41A-42333-16	1/4 X 0.035 X 35	WW-T-78965S-T6	MS21922-4	2	MS21921-4D	2
41A-42333-18	3/8 X 0.035 X 8	WW-T-78965S-T6	MS21922-6	2	MS21921-6D	2
41A-42333-20	3/8 X 0.035 X 10	WW-T-78965S-T6	MS21922-6	2	MS21921-6D	2
41A-42333-22	3/8 X 0.035 X 8	WW-T-78965S-T6	MS21922-6	2	MS21921-6D	2
41A-42333-30	3/8 X 0.035 X 10	WW-T-78965S-T6	MS21922-6	2	MS21921-6D	2
41A-42333-302	3/8 X 0.035 X 30	WW-T-78965S-T6	MS21922-6	2	MS21921-6D	2
41A-42333-304	DELETED					
41A-42333-32	3/8 X 0.035 X 27	WW-T-78965S-T6	MS21921-6	2	MS21922-6D	2
41A-42333-324	3/8 X 0.035	WW-T-78965S-T6	MS21922-6	2	MS21921-6D	2
41A-42333-326	3/8 X 0.035	WW-T-78965S-T6	MS21922-6	2	MS21921-6D	2
41A-42333-328	3/8 X 0.028	MIL-T-6845 18-8/304 30B/2027	MS21922-8	2	MS21921-8	2
41A-42333-34	3/8 X 0.035 X 8	WW-T-78965S-T6	MS21922-6	2	MS21921-6D	2
41A-42333-36	3/8 X 0.035 X 56	WW-T-78965S-T6	MS21922-6	2	MS21921-6D	2
41A-42333-38	3/8 X 0.035 X 9	WW-T-78965S-T6	MS21921-6	2	MS21922-6D	2
41A-42333-4	1/4 X 0.035 X 19	WW-T-78965S-T6	MS21922-4	2	MS21921-4D	2
41A-42333-40	3/8 X 0.035 X 50	WW-T-78965S-T6	MS21922-6	2	MS21921-6D	2
41A-42333-44	3/8 X 0.035 X 25	WW-T-78965S-T6	MS21922-6	2	MS21921-6D	2
41A-42333-46	3/8 X 0.035 X 54	WW-T-78965S-T6	MS21922-6	2	MS21921-6D	2
41A-42333-48	3/8 X 0.035 X 56	WW-T-78965S-T6	MS21922-6	2	MS21921-6D	2
41A-42333-50	3/8 X 0.035 X 35	WW-T-78965S-T6	MS21922-6	2	MS21921-6D	2

PART NUMBER	SIZE, GAUGE, STRAIGHT LENGTH	MATERIAL SPEC.	FITTINGS			
			SLEEVE	QTY	NUT	QTY
HYDRAULIC SYSTEM (CONTINUED)						
41A-42333-52	3/8 X 0.035 X 34	WW-T-78965S-T6	MS21922-6	2	MS21921-6D	2
41A-42333-56	3/8 X 0.028 X 10	MIL-T-6845 18-8/304 30B/1977	MS21922-6	2	MS21921-6	2
41A-42333-58	1/4 X 0.035 X 18	WW-T-78965S-T6	MS21922-4	2	MS21921-4D	2
41A-42333-6	1/4 X 0.035 X 20	WW-T-78965S-T6	MS21922-4	2	MS21921-4D	2
41A-42333-60	3/8 X 0.035 X 14	WW-T-78965S-T6	MS21922-6	2	MS21921-6D	2
41A-42333-62	3/8 X 0.028 X 10	MIL-T-6845 18-8/304 30B/1977	MS21922-6	2	MS21921-6	2
41A-42333-64	3/8 X 0.035 X 12	WW-T-78965S-T6	MS21922-6	2	MS21921-6D	2
41A-42333-66	3/8 X 0.035 X 6	WW-T-78965S-T6	MS21922-6	2	MS21921-6D	2
41A-42333-68	3/8 X 0.035 X 20	WW-T-78965S-T6	MS21922-6	2	MS21921-6D	2
41A-42333-72	1/2 X 0.035 X 13	WW-T-78965S-T6	MS21922-8	2	MS21921-8D	2
41A-42333-74	1/2 X 0.028 X 6	MIL-T-6845 18-8/304 30B/2027	MS21922-8	2	MS21921-8	2
41A-42333-76	1/2 X 0.028 X 9	MIL-T-6845 18-8/304 30B/2027	MS21922-8	2	MS21921-8	2
41A-42333-78	1/2 X 0.028 X 15	MIL-T-6845 18-8/304 30B/2027	MS21922-8	2	MS21921-8	2
41A-42333-8	1/4 X 0.035 X 8	WW-T-78965S-T6	MS21922-4	2	MS21921-4D	2
41A-42333-82	3/8 X 0.035 X 9	WW-T-78965S-T6	MS21922-6	2	MS21921-6D	2
41A-42333-84	3/8 X 0.035 X8	WW-T-78965S-T6	MS21922-6	2	MS21921-6D	2
41A-42333-86	3/8 X 0.035 X 24	WW-T-78965S-T6	MS21922-6	2	MS21921-6D	2
41A-42333-88	3/8 X 0.035 X 11	WW-T-78965S-T6	MS21922-6	2	MS21921-6D	2
41A-42333-90	3/8 X 0.035 X 27	WW-T-78965S-T6	MS21922-6	2	MS21921-6D	2
41A-42333-92	3/8 X 0.035 X 10	WW-T-78965S-T6	MS21922-6	2	MS21921-6D	2
41A-42333-94	3/8 X 0.035 X 6	WW-T-78965S-T6	MS21922-6	2	MS21921-6D	2
41A-42333-950	1/2 X 0.028 X 5.5	MIL-T-6845 18-8/304 30B/2027	MS21922-8	2	MS21921-8	2
41A-42333-952	1/2 X 0.028 X 5.5	MIL-T-6845 18-8/304 30B/2027	MS21922-8	2	MS21921-8	2
41A-42333-98	3/8 X 0.028 X 30	MIL-T-6845 18-8/304 30B/1977	MS21922-6	2	MS21921-6	2
41A-75201-10	1/4 X 0.035 X 20	WW-T-78965S-T6	MS21922-4	2	MS21921-4D	2
41A-75201-12	1/4 X 0.035 X 20	WW-T-78965S-T6	MS21922-4	2	MS21921-4D	2
41A-75201-6	1/4 X 0.035 X 5	WW-T-78965S-T6	MS21922-4	2	MS21921-4D	2

PART NUMBER	SIZE, GAUGE, STRAIGHT LENGTH	MATERIAL SPEC.	FITTINGS			
			SLEEVE	QTY	NUT	QTY
HYDRAULIC SYSTEM (CONTINUED)						
41A-75201-8	1/4 X 0.035 X 5	WW-T-78965S-T6	MS21922-4	2	MS21921-4D	2
41A-75202-10	DELETED					
41A-75202-12	DELETED					
41A-75202-14	DELETED					
41A-75202-16	1/4 X 0.035 X 12	WW-T-78965S-T6	MS21922-4	2	MS21921-4D	2
41A-75202-18	1/4 X 0.035 X 9	WW-T-78965S-T6	MS21922-4	2	MS21921-4D	2
41A-75202-2	DELETED					
41A-75202-20	1/4 X 0.035 X 6	WW-T-78965S-T6	MS21922-4	2	MS21921-4D	2
41A-75202-22	1/4 X 0.035 X 5	WW-T-78965S-T6	MS21922-4	2	MS21921-4D	2
41A-75202-24	1/4 X 0.035 X 23	WW-T-78965S-T6	MS21922-4	2	MS21921-4D	2
41A-75202-26	1/4 X 0 035 X 5	WW-T-78965S-T6	MS21922-4	2	MS21921-4D	2
41A-75202-28	1/4 X 0.035 X 76	WW-T-78965S-T6	MS21922-4	2	MS21921-4D	2
41A-75202-42	1/4 X 0.035	WW-T-78965S-T6	MS21922-4	2	MS21921-4D	2
41A-75202-44	1/4 X 0.035	WW-T-78965S-T6	MS21922-4	2	MS21921-4D	2
41A-75202-46	1/4 X 0.035	WW-T-78965S-T6	MS21922-4	2	MS21921-4D	2
41A-75202-48	1/4 X 0.035	WW-T-78965S-T6	MS21922-4	2	MS21921-4D	2
41A-75202-50	1/4 X 0.035	WW-T-78965S-T6	MS21922-4	2	MS21921-4D	2
41A-75202-52	1/4 X 0.035	WW-T-78965S-T6	MS21922-4	2	MS21922-4D	2
41A-75202-6	DELETED					
41A-75202-8	1/4 X 0.035 X 12	WW-T-78965S-T6	MS21922-4	2	MS21921-4D	2

PART NUMBER	SIZE, GAUGE, STRAIGHT LENGTH	MATERIAL SPEC.	FITTINGS			
			SLEEVE	QTY	NUT	QTY
		OXYGEN SYSTEM				
41A-49052-10	3/16 X .030 X	WW-T-775 COPPER	AN800-3	2	AN805-3	2
41A-49052-2	3/16 X .030 X *	WW-T-775 COPPER	801364 AN800-3	1 1	AN805-3	1
41A-49052-20	3/16 X .030 X	WW-T-775 COPPER	AN785-3	2		
41A-49052-22	3/16 X .030 X	WW-T-775 COPPER	AN785-3 AN800-3	1 1	AN805-3	1
41A-49052-24	DELETED					
41A-49052-26	3/16 X .030 X	WW-T-775 COPPER	AN800-3	2	AN805-3	2
41A-49052-28	3/16 X .035 X	MIL-T-6845 18-8/304	MS20819-3	2	AN818-3	2
41A-49052-3	3/16 X .030 X *	WW-T-775 COPPER	801364 AN800-3	1 1	AN805-3	1
41A-49052-30	5/16 X .035 X	WW-T-787 57S-O 30B/963	MS20819-5	2	AN818-5	2
41A-49052-32	3/16 X .035	MIL-T-6845 18-8/304	MS20819-3	2	AN818-3	2
41A-49052-34	5/16 X .035	WW-T-787 57S-O 30B/963	MS20819-5	2	AN818-5	2
41A-49052-36	3/16 X .035 X	MIL-T-6845 18-8/304	MS20819-3	2	AN818-3	2
41A-49052-4	3/16 X .030 X	WW-T-775 COPPER	AN800-3	2	AN805-3	2
41A-49052-5	3/16 X .030 X	WW-T-775 COPPER	AN800-3	2	AN805-3	2
41A-49052-6	3/16 X .030 X	WW-T-775 COPPER	AN800-3	2	AN805-3	2
41A-49052-8	3/16 X .030 X	WW-T-775 COPPER	AN800-3	2	AN805-3	2

* ALTERNATIVE, 800289 BOTH G.S.M.

PART NUMBER	SIZE, GAUGE, STRAIGHT LENGTH	MATERIAL SPEC.	FITTINGS			
			SLEEVE	QTY	NUT	QTY
		PITOT STATIC SYSTEM				
S1244B15-49	.208 ID X 49	MIL-I-7444 TYPE II	FLEXIBLE TUBE		PLASTIC	
41-55750-106	1/4 X .035 X	WW-T-789 65S-T6	MS20819-4D	1	AN818-4D	1
41-55750-108	1/4 X .035 X	WW-T-789 65S-T6	MS20819-4D	1	AN818-4D	1
41-55750-184	1/4 X .035 X	WW-T-789 65S-T6	MS20819-4	1	AN818-4D	1
41-55750-188	1/4 X .035 X	WW-T-789 65S-T6	MS20819-4	1	AN818-4D	1
41A-42126-14	1/4 X .035 X	WW-T-789 65S-T6	MS20819-4	2	AN818-4D	2
41A-42126-16	1/4 X .035 X	WW-T-789 65S-T6	MS20819-4	2	AN818-4D	2
41A-42126-18	1/4 X .035 X	WW-T-789 65S-T6	MS20819-4	2	AN818-4D	2
41A-42126-2	1/4 OD X .03 X	MPS184-40 NYLON	MS20819-4	2	AN818-4D	2
41A-42126-20	3/8 X .035 X	WW-T-789 65S-T6	MS20819-6	2	AN818-6D	2
41A-42126-26	3/8 X .035 X	WW-T-789 65S-T6	MS20819-6	2	AN818-6D	2
41A-42126-28	3/8 X .035 X	WW-T-789 65S-T6	MS20819-6	2	AN818-6D	2
41A-42126-30	3/8 X .035 X	WW-T-789 65S-T6	MS20819-6	2	AN818-6D	2
41A-42126-32	3/8 X .035 X	WW-T-789 65S-T6	MS20819-6	2	AN818-6D	2
41A-42126-34	3/8 X .035 X	WW-T-789 65S-T6	MS20819-6	2	AN818-6D	2
41A-42126-36	1/4 X .035 X	WW-T-789 65S-T6	MS20819-4	2	AN818-4D	2
41A-42126-38	3/8 X .035 X	WW-T-789 65S-T6	MS20819-6	2	AN818-6D	2
41A-42126-4	3/8 OD X .04 X	MPS184-40 NYLON	MS20819-6	2	AN818-6D	2
41A-42126-40	1/4 X .03 X	MPS184-40 NYLON	MS20819-4	2	AN819-4D	2
41A-42126-42	1/4 X .03 X	MPS184-40 NYLON	MS20819-4	2	AN818-4D	2
41A-42126-6	1/4 X .035 X	WW-T-789 65S-T6	MS20819-4	2	AN818-4D	2
41A-42126-8	1/4 X .035 X	WW-T-789 65S-T6	MS20819-4	2	AN818-4D	2

PART NUMBER	SIZE, GAUGE, STRAIGHT LENGTH	MATERIAL SPEC.	FITTINGS			
			SLEEVE	QTY	NUT	QTY
		TAPE				
JAN-P-127	1 IN. & 2 IN. WIDE	TYPE I GRADE B	TAPE		AS REQUIRED	
LAC-24-426 TYPE II	1 IN. WIDE	VINYL	TAPE		AS REQUIRED	
MIL-C-5040	.14 IN. DIA	TYPE II NYLON CORD			AS REQUIRED	
S1207-18	1 IN. WIDE		IDENT TAPE		AS REQUIRED	
S1214-180			IDENT TAPE		AS REQUIRED	
S1214-37			IDENT TAPE		AS REQUIRED	
41A-42301-92	2 IN. WIDE	PPP-T-60 TYPE 3 CLASS 2	TAPE		AS REQUIRED	
41A-90452-10	1-7/16 DIA 1/2 THICK	COMMERCIAL CORK	CORK		AS REQUIRED	
472 (MMM)	1 IN. WIDE	VINYL	TAPE		AS REQUIRED	
7000 (SEO)	1 IN. WIDE	INSULATING	MYSTIK TAPE		AS REQUIRED	
7000G (SEO)	1 IN. & 2 IN. WIDE	INSULATING	MYSTIK TAPE		AS REQUIRED	
70006 (SEO)	1 IN. & 2 IN. WIDE	INSULATING	MYSTIK TAPE		AS REQUIRED	
7402 (SEO)	1 IN. & 2 IN. WIDE	INSULATING	MYSTIK TAPE		AS REQUIRED	
80 (CVL)	1 IN. WIDE	BLACK	VELCRO TAPE (HOOK)		AS REQUIRED	
88 (JMV)	3/64 X 2 IN. WIDE	ASBESTOS	SHEET		AS REQUIRED	

PART NUMBER	SIZE, GAUGE, STRAIGHT LENGTH	MATERIAL SPEC.	FITTINGS			
			SLEEVE	QTY	NUT	QTY
		TRIM (INTERIOR)				
S1244B17-1/2	.166 ID X 1/2	MIL-I-7444 TYPE II	FLEXIBLE TUBE		PLASTIC	
S1244B7-1/2	.625 ID X 1/2	MIL-I-7444 TYPE 11	PLASTIC TRANSPARENT			
41A-41550-28	1 IN. WIDE	NO. 80 UNBLEACHED	VELCRO TAPE		(PILE)	
41A-41550-30	1 IN. WIDE	NO. 80 UNBLEACHED	VELCRO TAPE		(HOOK)	
41A-41560-3	3/4 IN. WIDE	NO. 80	VELCRO TAPE		(HOOK)	
41A-41560-4	3/4 IN. WIDE	NO. 80	VELCRO TAPE		(PILE)	
41A-41567-13	1 IN. WIDE	NO. 80	VELCRO TAPE		(PILE)	
41A-41567-14	1 IN. X 2 IN.	NO. 80	VELCRO TAPE		(HOOK)	
41A-41567-15	1 IN. WIDE	NO. 80	VELCRO TAPE		(PILE)	
41A-41567-16	1-1/4 IN. X 1-2/5 IN.	NO. 80	VELCRO TAPE		(HOOK)	
41A-41567-18	2 IN. X 24 IN.	NO. 80	VELCRO TAPE		(HOOK)	
41A-41567-8	5/8 IN. WIDE	MIL-T-5083 TYPE IV	WEBBING			
41A-42213-19	1 IN. WIDE	NO. 80 BLACK	VELCRO TAPE		(HOOK)	
41A-42213-20	1 IN. WIDE	NO. 80 BLACK	VELCRO TAPE		(PILE)	

PART NUMBER	SIZE, GAUGE, STRAIGHT LENGTH	MATERIAL SPEC.	FITTINGS			
			SLEEVE	QTY	NUT	QTY
		MISCELLANEOUS				
K41A-10006-12		MIL-STD-417				
		NSN 9320-21-807-2988	RUBBER			
S4550		NSN 9390-21-802-3122	SEAL, RUBBER		AS REQUIRED	
			DESCRIPTION			
s4551		NSN 9390-21-802-3144	NOSE FUSELAGE DOORS, FIG 18-27			
41-323-002-51	1/16 x 11	MIL-C-1511	CABLE			
41-323-002-52		QQ-W-321 COMP A/B 1/8 HARD	WIRE BRASS			
41-323-003-11	1/16 x 14	MIL-C-1511	CABLE			
41-323-012-6	1/16 x 1 x 3-1/2	AMS3240 SHORE 40	RUBBER			
41-323-015-13	1/16 x 23	MIL-C-1511	CABLE			
41A-35005-112	1/16 x 1/2 x 12	MIL-R-3065 SB612EFF	RUBBER			
41A-35005-114	.032 x 1.55 x	MPS184-27	RUBBER			
41A-35005-116	.032 x 2.05 x	MPS184-27	RUBBER			
41A-35005-30	.032 x 1.6 x	MPS184-27	RUBBER			
41A-35005-32	.032 x 1.6 x	MPS184-27	RUBBER			
41A-35005-34	.032 x 1.5 x .375	S1333-3	RUBBER			
41A-35005-36	.032 x 1.1 x .250	S1333-2	RUBBER			
41A-35125-36	83 IN. LONG	AMS3301 NSN 9320-21-802-3122	SEAL, RUBBER			
41A-41567-10	3/16 IN. DIA.	MIL-C-5650	ELASTIC CORD			
41A-41567-6	3/16 IN. DIA.	MIL-C-5650	ELASTIC CORD			
41A-43014-92	1/4 x 5 x 5	MIL-R-6130 GRADE A TYPE II	COND MED			
41A-43014-94	1/4 x 4 x 3	MIL-R-6130 GRADE A TYPE II	COND MED RUBBER			
41A-52011-42	45 IN. LONG	S4718 NSN 9320-21-812-3307	SPECIAL SHAPED SECTION (CENTRE)		RUBBER	
41A-52011-44	4-1/2 IN. LONG	S4718 NSN 9320-21-812-3307	SPECIAL SHAPED SECTION (LH)		RUBBER	
41A-52011-45	4-1/2 IN. LONG	S4718 NSN 9320-21-812-3307	SPECIAL SHAPED SECTION (RH)		RUBBER	
41A-90765-40	.050 IN. THICK	MIL-C-8068 TYPE 2	RUBBER COATED		NYLON CLOTH	
41A-90765-42	.050 IN. THICK	MIL-C-8068 TYPE 2	RUBBER COATED		NYLON CLOTH	
41A-90765-44	.060 TO .070 THICK	MIL-P-15035C TYPE FDE NSN 5970-21-808-5633				
		SHEET PHENOLIC RESIN AS REQUIRED				
41A-90765-76	1/16" THICK	MIL-R-6855 CLASS 2				
41A-90765-78		NSN 9320-00-241-9754	SHEET RUBBER		AS REQUIRED	
41A-95212-54	1/16 IN. THICK	MIL-G-6183 CLASS 1 MEDIUM	CORK		AS REQUIRED	
41A-95212-56	3/8 IN. THICK	CF206 TYPE 1 CLASS 16R1	FELT		AS REQUIRED	
41A-95212-57	3/8 IN. THICK	CF206 TYPE 1 CLASS 16R1	FELT		AS REQUIRED	
41A-95212-58	3/8 IN. THICK	CF206 TYPE 1 CLASS 16R1	FELT		AS REQUIRED	
41A-95212-60	3/8 IN. THICK	CF206 TYPE 1 CLASS 16R1	FELT		AS REQUIRED	
41A-95212-62	3/8 IN. THICK	CF206 TYPE 1 CLASS 16R1	FELT		AS REQUIRED	
41A-95212-64	3/8 IN. THICK	CF206 TYPE 1 CLASS 16R1	FELT		AS REQUIRED	
41A-95212-66	1/16 IN. THICK	MIL-G-6183 CLASS 1 MEDIUM	CORK		AS REQUIRED	
110-004-2-1440	PYLON ASSY, REFER TO FIGURE 61D, INDEX 2 AND 23	SYNTHETIC RUBBER – SPECIAL SHAPED SECTION NSN 9390-00-027-3340			AS REQUIRED	
			DESCRIPTION			
9505-21-859-2942	.098 DIA	QQ-W423	PIN, HINGE (MLG LEG, DOOR) FIG 47-7			
9505-21-859-2943	.096 DIA	QQ-W423	PIN, HINGE (MLG LEG, DOOR) FIG 47-7			

PART 5

NUMERICAL PART LIST

This change, dated 1999-03-29, replaces Part 5 Numerical Part List, including all revisions and changes up to this date.

The Numerical Part List is sorted in alphanumerical order using the following sequence:

Dash (-);
Oblique (/);
Numbers (1 to 9); and
Letters (A to Z).

Example: 1-000
1/000
10000
1A000

PART NUMBER	FIG AND INDEX NO	QTY /AC
0106925-3	134A-	
0106940-1	134A-35	2
0310-272-501	52 - 2	1
057-0688-002	123 -	2
057-0709-001	123 -	1
1/4	101 -	2
	128 - 6B	2
10-101949-20	123 -	1
10-101949-24	128 -	1
10-150949-16	107 -	1
	126 -	1
10-150949-20	107 -	1
	107 -	1
	107 -	1
	107 -	1
	107 -	1
	126 -	1
10-150949-22	107 -	1
	107 -	1
	107 -	1
	107 -	1
10-150949-24	126 -	1
	126 -	1
10-260131-201	107 - 9	2
	107 -22	1
10-36675-10	107 -	1
10-36675-18	107 -	2
	107 -	1
10-36675-20	107 -	1
10-37090-121	107 -21	1
10-74912-3	114 -	1
10-74920-14	114 -	1
	114 -	1
10-74920-22	114 -	1
1000-24	134A-40	2
	135A-28	REF
1000-35	72 -11	4
10011-6A	101 -	
10011-7	101 -48	2
100994	45 -30	REF
100994-1	37 -23	REF
	44 -27	REF
	89 -16	2
101-0536-65-7	130 -63	1
10191	85 -	1
102196-2	92 - 1	REF
	94 - 2	1
10225-68-1	48 -11	1
	55 -13	1
10225-84	54 - 6	1
103308-1	92 - 2	REF
	94 - 4	1
104260	48 -18	REF
10520550	134A-48	6
10558N01Y00	130 -	1
107A	0 -	4
	109 -35	1
	111 -10	1
	130 -	1
10HL(A)	130 -	4
10HL(R)	130 -	4
10HR1V13	130 -	2
11008-7240	99 - 8	1
1100B52Z4	61A-26	1
	61A-38	1
110493-12	99 -	1
1108-02	44 -	8
1112-589976	85 -27	1
1112-589977	82 -16	1
	86 - 2	1
	86 - 9	1
	86 -16	1
1112-589978R	87 - 2B	1
11182B-CL41	97 -21	1

PART NUMBER	FIG AND INDEX NO	QTY /AC
112-589977	86 -32	2
11300	124 -21	1
	125 -33	REF
1182B-CL41	92 -16	REF
118J000-(B)	56 -39	REF
118J000-800	61C- 1	2
11A00227P01	20 - 3	1
	20 - 6	1
11A00228G01	20 - 2	1
11A00228G02	20 - 5	1
121009-1	52 -18	1
121009-4	52 -21	1
12164-1311	71 -	1
12164-1424	71 -	1
12164-511	71 -	1
	71 -	
1225C6-65	31 -14	1
1227-1	130 -44	1
1227-2	130 -45	1
124623-01	108 -19	REF
	130B- 1	1
124623-1	102 -14	REF
128-2VC	104 -	8
135751	94 -	1
138474-01-01	102 -16	REF
	130B- 3	1
13AT2	72 -17A	1
14	135 -	2
14-562-1	56 -22	REF
	60 - 2	3
140140-01-01	130 -14	1
14523-14	94 -	1
14523-2	94 -	1
14615	94 -	1
14625	94 -	1
14684	94 -	1
14990	94 -	1
1500-059-2	0 -21	4
1500-059-3	0 -22	6
	112 -42	1
15183-53125SH	94 - 3	1
1520-2	109A-39	1
152B22A	130 -22	1
152K60A	105 -58	4
152NM	133 - 6C	2
1537168	103 -	1
1541	109A-	
1543	109A-	
15489-3	71 -20	1
	71 -27	1
15571-1	71 -40	1
1559-10-03	130 -21	1
16-21B	123 -33	1
160554-2	142 -	1
160555-1	142 -	1
	142 -	1
160556-1	142 -18	1
160557-1	139 - 5	2
	139 - 7	1
	141 -	2
	141 -	1
160557-2	139 - 9	1
	139 -15	2
	139 -18	1
	139 -31	1
	141 -	1
	141 -	2
160557-3	139 -11	1
	139 -13	1
	139 -41	1
	141 -	1
	141 -	1
	141 -14A	1
160557-4	141 -	1

PART NUMBER	FIG AND INDEX NO	QTY /AC
	141 -	1
	141 -	1
160557-5	139 -22	1
	139 -33	1
	141 -	1
160557-6	139 -26	1
	139 -35	1
	141 -	1
160557-7	139 - 2	3
	139 -20	1
	139 -24	1
	139 -28	1
	139 -39	1
	141 -	1
	141 -	1
160557-8	139 -37	2
	141 -	2
160559-1	140 - 7	2
160560-1	140 - 6	1
160560-2	140 - 5	1
160561-1	140 - 8	4
160563-4	135D-	2
160563-5	135D-14	1
160563-6	135D-17	1
160563-7	135D- 5	2
160564-1	140 - 9	1
160566-1	139 -51	1
160566-2	139 -52	1
160566-3	139 -53	2
160567-1	139 -54	1
160567-2	139 -55	1
160568-1	139 -57	2
160569-1	139 -	2
160570-1	139 -56	2
160571-1	139 -61	1
160572-1	139 -59	1
160572-2	139 -60	1
160573-1	140 -10	1
160574-1	140 -12	1
160575-1	140 -13	1
160581-1	142 -13	2
1636-6AA-B1	130 -19	2
165-44	125 - 1C	1
165-61-1014	114 -	1
16505-420-1	43 -15	2
1680-21-807-0587	24 -64A	2
16925	123 -27D	1
172934-001	123 -18	1
	123 -24	REF
178052-1	98 -23	1
18-1417	130 -24	
18276-150	98 -33	1
18276-200	99 -17	6
18276-250	48 -15	1
	93 -12	REF
	99 -19	1
	99 -27	REF
19325-2	101 -58	REF
	130 -29	2
1947-1	111 -	3
19D2-2	81 - 9	1
1G349-3	56 -36	REF
	61A-32	2
1N1096	124 -17A	
1N1348A	110 -66	1
	128 -17A	1
1N249B	125 - 5	4
1N253	103 -40	4
1N3613	123 -24	1
1N3957	105 -	2
1N540	124 - 9B	1
1N649	123 -	1
20-0084-1C	126 -	2
20-0084-2C	126 -	2

PART NUMBER	FIG AND INDEX NO	QTY /AC
2002-354H	126 - 2	1
	128 - 33	REF
2024-4-4S	30 - 20	1
2030-015	60 -	1
203910-1	98 - 23A	1
205000L3/4	81 - 1F	1
20AS132-3	107 -	1
	130B- 14	1
	130B- 22	1
20P172-3	130B- 19	2
212-12ND	108 - 5A	1
214-16	5 - 61	36
	18 -	2
	18 -	2
	18 - 43	3
	32 -	16
214-16D	5 - 1	47
21428-16	71 - 26	1
21428-22	71 - 19	2
	71 - 25	1
21429	71 - 28	1
21430	71 - 21	1
21431	71 - 22	1
21432	71 - 42	1
21433	71 - 43	1
21434-1	71 - 41	1
215-90012	27 - 23A	1
215027	83 -	2
21505-44	71 - 39	2
21861	71 - 29	1
21862	71 - 44	1
21EN9-6	39 - 11	7
	119 - 24	REF
21GM4-190	82 - 31	1
21SN41-105	60 - 29	REF
	102 - 30	REF
	115 - 9	1
22558-11	25 - 11	1
22558-14	25 - 12	1
22559-11	25 - 13	1
227-28-5A	102 - 13	1
22866-13	52 - 20	3
22866-3	52 -	4
22866-5	52 - 17	4
22866-9	52 - 19	3
22922	118 -	4
	118 - 10A	6
	121 -	2
	121 -	4
	121 -	2
2297-13GM	134A- 38	2
22K1-048	134A-	4
22K2-02	22 -	2
230-20060	60 - 10	1
2362-63-1078	60 -	2
2366-63-1078SH	60 - 14	2
23693	118 - 10	6
	121 - 25	6
	121 -31Q	2
24-100D2	91 - 1	1
24-100D3	91 -	1
2400-14	134A- 53	2
24096-150A	98 -	1
24096-200C	99 -	6
24346-250C	48 -	1
	99 -	1
244-16	18 - 42	3
244-16C	23 - 13	6
244-16D	31 - 27	2
	34 - 28	6
244-18082	118 - 9	4
244-21082	121 - 24	6
244-22	113 -	4
244E40G180	102 - 39	REF

PART NUMBER	FIG AND INDEX NO	QTY /AC
2452-02	46 -	2
2452-02RET	46 -	2
24538-125	54 - 9	1
24538-150	48 -	1
24540-125	48 - 7	1
	54 -26	REF
	98 -31	2
24540-150	48 - 6	1
	48 -13	1
	54 -25	REF
24540-200	99 -14	1
247-5/8	135D- 9	2
249-1390-001	123 -	1
249149	104 -11	2
2499	30 -32	1
25830071	105 -29	1
	106 -47	REF
2600-32	60 -	4
2602-832	115 -49	1
261437-1	138 - 6	1
26220068	92 -21	REF
	92 -26	REF
	98 - 6	1
2630269	61 -	1
	61 -	1
2630363	56 -27	REF
	61 -10	1
	61 -25	1
2633496	61 -10A	2
	61 -25A	2
265159-1	139 - 6	2
	141 -	2
265159-10	139 -27	1
	139 -36	1
	141 -	1
265159-11	139 -29	1
	141 -	1
265159-12	139 -38	2
	141 -	2
265159-13	139 -40	1
	141 -	1
265159-14	139 - 3	3
	141 -	1
265159-15	139 -42	1
	141 -14D	1
265159-2	139 - 8	1
	141 -	1
265159-3	139 -10	1
	139 -19	1
	139 -32	1
	141 -	1
265159-4	139 -12	1
	141 -	1
265159-5	139 -14	1
	141 -	1
265159-6	139 -16	2
	141 -	2
265159-7	139 -21	1
	141 -	1
265159-8	139 -23	1
	139 -34	1
	141 -	1
265159-9	139 -25	1
	141 -	1
265196-1	135C- 3	2
265200-1	135C- 6	1
265201-1	142 - 3	1
265202-1	142 - 2	1
265203-1	142 - 1	1
265204-1	142 - 8	1
265205-1	142 - 5	1
265206-1	142 - 6	1
265207-1	142 - 4	1
265210-1	141 -	1

PART NUMBER	FIG AND INDEX NO	QTY /AC
265211-1	141 -	1
265212-1	141 -	1
265213-1	141 -	1
2660333M2	56 - 33	REF
	61A- 2	1
26C10	109A- 32	2
26N015	109 - 15C	2
26S8-3	108 - 7	1
27660-3	101 - 31	1
277A4EE	85 - 21	1
279A4TB	92 - 18	REF
	97 - 17	1
28-1C	61D- 35	4
28-27129-2	135C- 16	2
28-27129-4	135C- 17	2
28-52944-2	115 -	2
28VS3C2	109A- 44	1
2935-04	20 - 29A	12
2BREM4A	52 - 22	2
2BREMLH4A	52 - 26	2
2D100B	57 -	
	58 -	
2R2065-12	88 - 7	1
2R2065-14	88 - 12	1
2R2065-3	86 - 4	1
2R2065-5	86 - 11	1
2R2065-6	39 - 5A	1
3-1124-8-42-6	96 - 56	2
3-1664-12-86-6	92 - 29	REF
	96 - 63	REF
	100 - 1	1
3-1664-14-60-6	96 - 13	1
3-1664-14-68-6	96 - 14	1
3-5618	27 - 37	1
30-1591-1	106 - 9	1
30-83059	129 -	1
3002-3	135B- 41	4
30050-15	92 - 22	REF
	98 - 7	1
300U60A	105 - 57	1
30641-012	39 -	12
	43 - 16B	4
	83 -	8
31-352	123 -27E	1
	125 - 14	2
31236-10T-C11	128 - 37	REF
	130 - 18	1
315078-4	25 - 10	1
	97 - 41	REF
316-12-8	115 - 44	2
316-13-8	61 - 29	2
316-14-8	101 - 53	9
316-20-8	61 - 17A	2
	61 - 20A	1
316-3-6	101 - 16	21
316-4-8	82 - 46	2
	82 - 47	2
	82 - 48B	2
	82 - 50	2
	82 - 54	1
	83 - 27	4
	83 - 32	1
	83 - 41	4
	84 - 31	10
	90 - 18	2
	114 - 62	1
316-5-6	101 - 17	5
316-5-8	71 - 34	8
316-6-6	58 - 24C	1
	59 - 20	3
316-6-8	82 - 48A	1
	82 - 55	1
	84 - 12A	1
	84 - 16	1

PART NUMBER	FIG AND INDEX NO	QTY /AC
	84 - 17	4
	84 - 17C	8
	84 -17E	2
	90 - 17	4
316-7-6	29 -	AR
316E4-6	61 - 7	7
321094-3-1	92 - 20	REF
	96 - 60	REF
	98 - 1	1
321682-1-1	92 - 25	REF
	99 - 15	3
327	136 - 15	2
3288000-5A	37 - 11	REF
	43 - 1	1
	44 - 29	REF
3288000-6A	43 -	1
3289000-1	37 - 22	REF
	45 - 27	REF
3289000-4	89 - 11	1
3289000-5	89 -	1
3290000	37 - 17	REF
	43 - 26	REF
	44 - 25	REF
3290000-10	89 -	1
3290000-9	89 - 1	1
3290012-3	81 -	1
3290042-1	81 - 1J	2
3291000-15	79 - 2	REF
	81 - 1	1
3291000-17	81 -	
3291000-7	37 - 9	REF
3292000-1	79 - 5	REF
	82 - 6	1
	82A- 14	REF
3293000-1	62 - 26	REF
	74 - 45	REF
	88 - 1	1
3293019-1	88 - 1C	2
3294000-3	83 - 11	2
3294000-4	83 - 12	2
3294011-1	43 - 9H	2
	43 - 16C	2
3294019-5	43 - 9M	2
3295000-3	38 - 23	REF
	39 - 9	1
3295000-4	37 - 3	REF
	39 - 10	1
	81 - 23	REF
3295014-1	43 - 9K	1
3295014-2	43 -	1
3295018-1	43 - 9D	1
3295018-2	43 -	1
3297000-1	43 - 16	2
	88 - 68	REF
	88 - 68	
32B180-1B	102 - 7	REF
	103 - 22	1
	106 - 48	REF
32B52-12A	102 - 8	REF
	103 - 26	1
3300-6	87 - 67	1
3300-8	87 - 69	1
3302-8	87 - 1	1
3302000-1	43 - 9C	1
3302000-2	43 -	1
3302017-1	43 - 9E	2
33087C	109 -15F	4
33645-1495	113 - 21	1
3518	58 - 32	1
3591-4CN X 3/8	9 - 22C	2
	60 - 1A	12
359770-1	144 - 5	1
360278-1	144 - 22	1
360279-1	144 - 20	1

PART NUMBER	FIG AND INDEX NO	QTY /AC
360280-1	144 -19	1
360281-1	144 -17	3
360282-1	144 -15	3
360283-1	144 -14	1
360284-1	144 -	1
360291-1	142 -	1
360292-1	142 -24	1
360293-1	142 -25	1
360294-1	138 -	1
360295-1	138 - 2	1
360296-1	138 - 3	1
360297-1	138 - 4	1
360297-2	138 - 5	1
360298-1	138 -	1
360299-1	138 - 1	1
360308-1	135C- 1	1
360310-1	142 -	1
360311-1	142 -	1
360312-1	139 -63	1
360312-2	139 -64	1
360312-3	139 -65	1
360312-4	139 -66	1
360313-1	139 -62	1
360318-1	136 -16	2
360318-2	136 -13	2
360356-1	142 -23	1
3605-16D	61A-19	1
361-625-525S	101 - 3	4
362-0377	86 - 1	1
	86 - 8	1
	86 -15	1
363-14503-018	130 -67	1
364-14503-018	130 -64	1
366-63-462SH	98 - 9	2
370-403-00	22 -	1
370-403-00-1	22 -	1
375211-16	85 -12	1
377-28-2A	102 -14	1
	106 -49	REF
	106 -49	
392904-1	56 -37	REF
	61B- 4	2
397-16	55 -18	2
397-40	54 - 3	1
3S2060DC126B1	107 -47	1
4002-5	18 -35	22
4002-5H	18 -	2
	18 -	2
4002-7	23 -16	6
4002-9	23 -	
4002G	5 -	14
	5 -	22
	31 -	2
	32 -	29
	32 -	20
	32 -	16
	34 -	6
	113 -	4
	130 -	4
4002H	18 -	2
	18 -	2
	18 -	32
	18 -	22
	18 -	17
	18 -	17
	23 -	6
	32 -	19
	32 -	17
40250	48 -26	REF
	71 -38	1
40252-2	62 -15	REF
	71 -18	1
	73 -17	REF
	74 -44	REF

PART NUMBER	FIG AND INDEX NO	QTY /AC
40252-4	71 -24	1
40253	62 - 3	REF
	82A- 1	1
4026D4	134A-22	2
40276-2	25 -24	REF
	31 - 2	1
405-00216	60 -28	REF
405-00217	56 -26	REF
	60 -25	1
40G26-1	5 -	12
40G32-1A	5 -	12
40S5-2	32 -48	6
	32 -63	16
	34 -45	6
40S5-3	5 -63	14
	5 -70	22
	18 -34	32
	18 -36	17
	18 -44	17
	32 -18	19
	32 -27	17
	32 -41	29
	32 -49	11
	113 - 3	4
40S5-4	31 -28	2
	32 -50	3
40S5-5	130 -	4
40S56-4A	5 - 3	12
41-10015	3 -	2
41-10016	3 -	2
41-10018	3 -	2
41-10121-4	4 -40	2
41-10121-800	4 -	2
41-10164-2	5 -48	2
41-10164-3	5 -47	2
41-10173-2	5 - 4	2
41-10173-4	5 - 6	4
41-10173-6	5 -	2
41-10173-8	5 -	2
41-10519-2	46 - 8	2
41-12010	7 - 4	1
41-12010-1	7 -	1
41-12011-800	7 - 9	1
41-12011-801	7 -	1
41-12011-802	7 -	
41-12011-803	7 -	
41-14013-2	5 -44	4
41-22013-6	12 -	1
41-22013-8	12 -13	1
41-22013-950	12 -	
41-22013-952	12 -	
41-24012-2	77A-29	1
41-24012-3	77A-	1
41-24014-2	77A-18	2
41-24015	77A-19	2
41-24016	77A-28	2
41-24017	77A-24	4
41-24022	13 -52	REF
41-24022-18	77A-22	1
41-24022-19	77A-	1
41-24022-802	77A-	1
41-24022-803	77A-	1
41-24023	77A-26	2
41-24027-2	14 -13	1
41-30079-10	34 -24	2
41-30079-12	34 -23	2
41-30081-10	33 -	1
41-30081-12	33 -	1
41-30081-14	33 -	1
41-30081-8	33 -	1
41-30097	22 -12	2
41-30102	22 -21	2
41-30122	22 - 4	1
41-30127	18 -24	4

PART NUMBER	FIG AND INDEX NO	QTY /AC	PART NUMBER	FIG AND INDEX NO	QTY /AC	PART NUMBER	FIG AND INDEX NO	QTY /AC
41-30129	18 -25	4	41-333-017-3	142 -27	1	41-87094-6	47 -32	2
41-31043	34 -57	4	41-333-018	135C-	2	41-87098	47 -20	2
41-322-003-10	136 -14	1	41-341-004-12	143 -27	2	41-87099	47 -19	2
41-322-005-16	138 -	1	41-341-004-13	143 -28	1	41-90364	65 -45	1
41-322-008-26	138 -	2	41-341-005-6	143 -21	1	41-90530	66 -	2
41-322-015-7	136 -19	2	41-341-034	140 -	REF	41-90530-2	66 - 8	2
41-322-015-8	136 -18	1	41-40515	134A-15	2	41-90531	66 -27	1
41-322-015-9	136 -20	4	41-41512-800	134 -23	1	41-90532	66 -14	2
41-322-044-17	138 -11	2	41-41512-801	134 -	1	41-90533	66 -13	2
41-322-044-18	138 -12	2	41-50725	109 -28	1	41-90534	66 -18	2
41-322-044-20	138 -14	2	41-50726	109 -29	1	41-96291-2	92 -13	REF
41-322-044-21	138 -13	2	41-50726-10	109 -	1		96 -57	2
41-322-044-33	138 -	4	41-52014-802	107 -	NP	41-96806	94 - 1C	1
41-322-044-5	138 -10	1	41-55750-100	132 - 6	1	41-96809-800	94 - 1	1
41-323-002-1	141 -	1	41-55750-12	132 - 9	1	4140-100-7M	130 -50	1
41-323-002-51	141 -	2	41-55750-168	132 -		4140-319-1	130 -51	1
	141 -	1	41-55750-184	132 - 4	1	4140-319-10	130 -58	1
	141 -	1	41-55750-188	132 - 5	1	4140-319-12	130 -60	1
	141 -	1	41-55750-58	132 -22	2	4140-319-14	130 -65	1
	141 -	1	41-55750-804	132 -	NP	4140-319-15	130 -66	1
	141 -	2	41-55750-806	132 -	1	4140-319-2	130 -52	2
	141 -	1	41-55851	132 - 7	1	4140-319-4	130 -53	1
	141 -	1	41-61014-2	34 -59	1	4140-319-6	130 -54	1
	141 -	1	41-75440-2	89 -43	4	4140-319-7	130 -55	1
	141 -	1	41-75474-2	88 -61C	2	4140-319-8	130 -56	1
	141 -	1	41-85077	38 - 5B	2	4140-319-9	130 -57	1
	141 -	2	41-87015	4 -	2	4140-409-7	130 -	1
	141 -	1	41-87016	44 -10B	2	41531	102 -12	1
	141 -	1		45 -14A	2	41A-00001	2 -	1
	141 -14B	1		45 -14A		41A-00010-103	135B-56	REF
41-323-002-52	141 -	4	41-87019	44 - 8	4	41A-00010-89	135 -70	2
	141 -	2		45 -	4	41A-00010-90	135 -69	2
	141 -	2	41-87020	44 - 5	4	41A-10000-814	2 -	1
	141 -	2		45 -11	4	41A-10000-817	2 -	1
	141 -	2	41-87021-4	44 - 7	2	41A-10000-818	2 - 1	REF
	141 -	4		45 -15	2	41A-10002-18	3 -	2
	141 -	2		45 -15		41A-10002-42	3 -	ARAR
	141 -	2	41-87022-4	45 -16	2	41A-10002-44	3 -	AR
	141 -	2		45 -16		41A-10002-46	3 -	AR
	141 -	2	41-87023	45 -12	4	41A-10002-48	3 -	AR
	141 -	2	41-87023-2	44 -11	4	41A-10002-50	3 -	AR
	141 -	4		45 -	4	41A-10002-52	3 -	AR
	141 -	2		45 -		41A-10002-812	2 - 1	REF
	141 -	2	41-87024	44 - 9	2		3 -	1
	141 -14C	2		45 -13	2	41A-10002-815	3 -	1
41-323-003-11	141 -	1		45 -13		41A-10002-816	3 -	
41-323-005-1A	144 - 2	2	41-87025	44 -10	2	41A-10002-817	3 -	
41-323-007-1	144 - 1	2		45 -14	2	41A-10003-100	4 -	4
41-323-008-1	144 -13	1		45 -14		41A-10003-122	4 -	4
41-323-009-1	144 -12	2	41-87034-2	44 -17	2	41A-10003-124	4 -	4
41-323-010-1	144 -11	1	41-87050	44 -19	4	41A-10003-810	3 - 1	REF
41-323-012-18	135C-	1		45 -25	4		4 -	1
41-323-012-6	135C- 2	1	41-87058-2	45 -22	2	41A-10003-811	4 -	1
41-323-014-7	142 -	1	41-87063	45 -23	4	41A-10003-812	4 -	
41-323-015-13	141 -	1	41-87069	38 -		41A-10003-813	4 -	
41-323-016-1	144 -10	1	41-87070	38 -	2	41A-10003-90	4 -	4
41-323-017-1	144 -	1	41-87070-2	37 -13	REF	41A-10003-953	5 -21A	8
41-323-017-2	144 - 4	1		38 -12	2	41A-10004	4 -	1
41-323-017-5	144 - 6	1	41-87072	38 -	2	41A-10004-14	4 -11	2
	144 -14A	1	41-87072-2	38 -11B	2	41A-10004-48	4 -	2
41-323-018-1	144 - 3	1	41-87073	38 -	2	41A-10004-49	4 -10	2
41-323-036-1	144 - 9	1	41-87073-2	38 -12A	2	41A-10004-72	4 - 4	1
41-332-004-6	142 -	1	41-87078	38 -24	REF	41A-10004-73	4 -	1
41-332-012	142 -	1	41-87078-16	43 -18	2	41A-10004-74	4 - 5	1
41-332-032-17	139 -	2		47 -39	REF	41A-10004-75	4 -	1
41-333-001-10	143 -12	1	41-87078-22	43 -	2	41A-10004-76	4 - 6	1
41-333-001-11	143 -14	1	41-87078-800	43 -16D	1	41A-10004-77	4 -	1
41-333-001-12	143 -10	1	41-87078-801	43 -	1	41A-10004-78	4 - 7	1
41-333-001-20	143 - 2	1	41-87078-802	43 -	2	41A-10004-79	4 -	1
41-333-001-21	143 - 3	1	41-87078-804	43 -	2	41A-10004-80	4 - 8	1
41-333-001-32	143 -17	2	41-87080	43 -20	2	41A-10004-801	4 -	1
41-333-001-8	143 - 9	1	41-87080-800	43 -	2	41A-10004-81	4 -	1
41-333-002-4	135C-12	1	41-87081	43 -21	4	41A-10004-82	4 - 9	1
41-333-003-4	135C- 8	2	41-87094-2	47 -27	4	41A-10004-83	4 -	1

PART NUMBER	FIG AND INDEX NO	QTY /AC
41A-10005	4 -	1
41A-10005-1	4 -	1
41A-10005-28	4 -	1
41A-10005-29	4 -	1
41A-10005-34	4 -23	1
41A-10005-35	4 -	1
41A-10005-36	4 -24	1
41A-10005-37	4 -	1
41A-10005-38	4 -25	1
41A-10005-39	4 -	1
41A-10005-40	4 -20	4
41A-10005-42	4 -21	4
41A-10005-46	4 -14	1
41A-10005-47	4 -	1
41A-10005-72	4 -15	2
41A-10005-74	4 -16	AR
41A-10005-78	4 -22	2
41A-10006-102	4 -	1
41A-10006-103	4 -	1
41A-10006-54	4 -30	8
41A-10007	4 - 1	REF
	5 -	1
41A-10007-1	5 -	1
41A-10007-26	5 -	1
41A-10007-27	5 -	1
41A-10008	4 -	REF
	5 -	1
	88 -	REF
41A-10008-1	5 -	1
	88 -	REF
41A-10009	4 - 2	REF
	5 -	1
41A-10009-1	5 -	1
41A-10009-104	5 -73	2
41A-10009-105	5 -72	2
41A-10009-106	5 -65	2
41A-10009-118	5 -37	4
	5 -59	4
41A-10009-154	5 -69	1
41A-10009-155	5 -	1
41A-10009-2	5 -	1
41A-10009-3	5 -	1
41A-10009-4	5 -	1
41A-10009-5	5 -	1
41A-10009-952	5 -	AR
41A-10010-1	6 -	NP
41A-10010-100	6 -27	1
41A-10010-101	6 -	1
41A-10010-102	6 -24	1
41A-10010-103	6 -	1
41A-10010-118	6 - 1	1
41A-10010-119	6 -	1
41A-10010-140	6 - 2	1
41A-10010-141	6 -	1
41A-10010-142	6 - 8	1
41A-10010-143	6 -	1
41A-10010-144	6 -11	1
41A-10010-145	6 -	1
41A-10010-156	6 - 6	1
41A-10010-158	6 - 6A	1
41A-10010-182	6 -21	1
41A-10010-183	6 -	1
41A-10010-184	6 -	1
41A-10010-185	6 -	1
41A-10010-2	6 -32	1
41A-10010-3	6 -	1
41A-10010-4	6 -33	1
41A-10010-5	6 -	1
41A-10010-80	6 - 7	1
41A-10010-800	4 - 3	REF
	6 -	NP
41A-10010-81	6 -	1
41A-10010-83	6 -	1
41A-10010-84	6 - 3	1

PART NUMBER	FIG AND INDEX NO	QTY /AC
41A-10010-85	6 -	1
41A-10010-86	6 -16	1
41A-10010-87	6 -	1
41A-10010-88	6 -13	1
41A-10010-89	6 -	1
41A-10010-90	6 -25	1
41A-10010-91	6 -	1
41A-10010-92	6 -20	1
41A-10010-93	6 -	1
41A-10010-94	6 -22	1
41A-10010-95	6 -	1
41A-10010-96	6 -19	1
41A-10010-97	6 -	1
41A-10010-98	6 -23	2
41A-10010-99	6 -26	2
41A-10024-6	5 - 2	1
41A-10024-7	5 -	1
41A-10026-2	4 -37	2
41A-10026-4	4 -38	2
41A-10027	4 -	2
41A-10027-2	4 -35A	2
41A-10028	4 -31	2
41A-10029	4 -28	2
41A-10030-4	20 -35	4
41A-10035-4	4 -	1
41A-10035-5	4 -	1
41A-10038	4 -	1
41A-10038-1	4 -	1
41A-10039-58	4 -36	1
41A-10039-59	4 -	1
41A-10039-800	4 -	1
41A-10039-803	4 -	1
41A-10040-2	4 -	1
41A-10040-3	4 -	1
41A-10045	4 -35C	4
	46 -20	REF
41A-10046	4 -	1
41A-10046-1	4 -	1
41A-10046-2	4 -18	1
41A-10046-3	4 -	1
41A-10047-16	5 -25	2
41A-10047-18	5 -26	2
41A-10048-20	5 -	4
	5 -	4
41A-10048-4	5 -30	4
41A-10048-6	5 -	2
41A-10048-8	5 -	4
41A-10048-800	5 -31	2
41A-10049-20	4 -43	2
41A-10054	4 -	1
41A-10054-1	4 -	1
41A-10054-2	4 -42	1
41A-10054-3	4 -	1
41A-10057	5 -	2
41A-10058-6	5 -	2
	75 -24	REF
41A-10061-102	5 -66	1
41A-10061-103	5 -	1
41A-10061-104	5 -74	1
41A-10061-105	5 -	1
	5 -	
41A-10061-106	5 -77	1
41A-10061-107	5 -	1
41A-10061-108	5 -71	1
41A-10061-109	5 -	1
41A-10061-110	5 -64	1
41A-10061-111	5 -	1
41A-10061-124	5 -67	1
41A-10061-125	5 -	1
41A-10061-126	5 -	1
41A-10061-127	5 -75	1
41A-10061-128	5 -	1
41A-10061-129	5 -55	1
41A-10061-26	5 -62	1

PART NUMBER	FIG AND INDEX NO	QTY /AC
41A-10061-27	5 -	1
41A-10061-52	5 -50	1
41A-10061-53	5 -	1
41A-10061-56	5 -49	1
41A-10061-57	5 -	1
41A-10062	4 -	1
41A-10062-1	4 -	1
41A-10062-2	4 -54	1
41A-10062-3	4 -	1
41A-10063-2	5 -57	2
41A-10063-8	5 -34	2
41A-10064	4 -52	2
41A-10068	5 -32	4
41A-10068-1	5 -33	4
41A-10070	9 -	4
41A-10071	5 -53	2
	90 -20	REF
41A-10072	5 -39	2
41A-10072-1	5 -40	2
41A-10073	5 -	2
41A-10074	5 -45	4
41A-10080	3 -	2
41A-10081	3 - 6	2
41A-10082	3 - 7	2
41A-10083	3 - 8	2
41A-10085	4 -35D	1
41A-10085-1	4 -	1
41A-10500	37 -25	REF
	46 -	1
41A-10500-1	46 -	1
41A-10500-2	46 -15	1
41A-10500-3	46 -	1
41A-10500-4	46 -	4
41A-10500-6	46 -	4
41A-10500-8	46 -	4
41A-10501	46 - 1	1
41A-10501-1	46 -	1
41A-10510	46 - 2	2
41A-10511	46 - 3	2
41A-10512	38 -20	REF
	45 -33	REF
	46 - 5	2
41A-10513	46 - 7	2
41A-10514	46 -	2
41A-10514-2	46 -	2
41A-10514-4	46 -10	2
41A-10514-6	46 -	2
41A-10520	2 - 6	REF
	46 -	1
41A-10520-1	46 -	1
41A-10550-10	47 - 8	2
41A-10550-12	47 - 9	2
41A-10550-14	47 - 4	1
41A-10550-15	47 -	1
41A-10550-16	47 -	2
41A-10550-44	47 - 1	1
41A-10550-45	47 -	1
41A-10550-46	47 - 2	1
41A-10550-47	47 -	1
41A-10550-58	47 -	1
41A-10550-59	47 -	1
41A-10550-8	47 - 3	1
41A-10550-802	37 -26	REF
41A-10550-804	2 - 7	REF
41A-10550-806	47 -	NP
41A-10550-807	47 -	NP
41A-10550-9	47 -	1
41A-10551-10	47 -	2
41A-10551-12	47 -13	2
41A-10553-2	47 -10	2
41A-10553-4	47 -10A	2
41A-10553-6	47 -	2
41A-10555-16	47 - 6	2
41A-10555-18	47 - 5	2

PART NUMBER	FIG AND INDEX NO	QTY /AC
41A-10555-8	47 - 7	2
41A-10555-804	47 -	2
41A-10559-2	47 -14	2
41A-10560	47 -16	
41A-11000	2 - 3	REF
	7 -	1
	119 -	REF
41A-11000-1	7 -	1
41A-11002	7 -	1
41A-11002-1	7 -	1
41A-11002-2	7 -24	1
41A-11002-3	7 -	1
41A-11010	7 -25	1
41A-11010-1	7 -	1
41A-11011	132 -14	1
41A-12100	2 - 2	REF
	7 -	1
41A-12100-10	7 -16	1
41A-12100-11	7 -	1
41A-12100-140	7 - 7	1
41A-12100-141	7 -	1
41A-12100-150	7 -19	8
41A-12100-158	7 -14	2
41A-12100-159	7 -15	2
41A-12100-16	7 - 1	1
41A-12100-164	7 -12	2
41A-12100-165	7 -13	2
41A-12100-17	7 -	1
41A-12100-174	7 - 5	4
41A-12100-2	7 -	1
41A-12100-201	7 -21	1
41A-12100-216	7 -	1
41A-12100-218	7 -18B	1
	7 -18B	
41A-12100-4	7 -	1
41A-12100-5	7 -	1
41A-12100-6	7 -	1
41A-12100-7	7 -	1
41A-12100-8	7 -17	1
41A-12100-801	7 -	1
41A-12100-803	7 -	1
41A-12100-9	7 -	1
41A-12102	7 -	
41A-12102-1	7 -	
41A-13101-46	9 -	1
41A-13101-50	9 -	1
41A-13101-812	2 - 5	REF
	9 -	1
41A-13101-814	9 -	1
41A-13102	70 -34	REF
41A-13102-14	9 -24	1
41A-13102-15	9 -	1
41A-13102-250	9 -16	2
41A-13102-252	9 -67	2
41A-13102-254	9 -22B	1
41A-13102-268	9 -17	1
41A-13102-269	9 -	1
41A-13102-270	9 -25	1
41A-13102-271	9 -	1
41A-13102-272	9 -18	1
41A-13102-424	9 -28	2
41A-13102-425	9 -29	2
41A-13102-434	9 -34	1
41A-13102-435	9 -36	1
41A-13102-436	9 -40	1
41A-13102-437	9 -	1
41A-13102-440	9 -54	1
41A-13102-441	9 -	1
41A-13102-450	9 -	1
41A-13102-452	9 -	1
41A-13102-454	9 -	1
41A-13102-456	9 -46	AR
41A-13102-458	9 -49	ARAR
41A-13102-460	9 -51	AR

PART NUMBER	FIG AND INDEX NO	QTY /AC
41A-13102-527	9 -50	1
41A-13102-569	9 -52	1
41A-13102-570	9 -55	2
41A-13102-576	9 -56	2
41A-13102-577	9 -48	1
41A-13102-578	9 -58	2
41A-13102-580	9 -57	2
41A-13102-586	9 -47	2
41A-13102-598	9 -	1
41A-13102-616	9 -22A	1
41A-13102-802	9 -	1
41A-13102-804	9 -	1
41A-13103	70 -35	REF
41A-13103-70	10 - 1	1
41A-13103-71	10 -	1
41A-13103-78	10 - 6	2
41A-13103-80	10 - 5	2
41A-13103-802	9 - 2	REF
	10 -	1
41A-13103-803	10 -	1
41A-13104	9 - 1	REF
	10 -	1
	70 -36	REF
41A-13104-2	10 -	1
41A-13104-22	10 -13	1
41A-13104-24	10 -	1
41A-13104-26	10 -14	ARAR
41A-13104-28	10 -	AR
41A-13104-4	10 -12	1
41A-13104-46	10 -	1
41A-13104-6	10 -	1
41A-13104-800	10 -	1
41A-13121-8	9 - 9	2
41A-13121-800	9 -	2
41A-13123-8	9 -14	2
41A-13123-800	9 -	2
41A-13131	10 -	1
	10 -	
41A-13132	10 -16	1
41A-13134	10 -	2
41A-13134-2	10 - 2	2
41A-13135	9 -11	2
41A-13138-2	9 -42	1
41A-13138-3	9 -	1
41A-13138-4	9 -43	1
41A-13138-5	9 -	1
41A-13138-6	9 -44	1
41A-13138-7	9 -	1
41A-13140-2	9 -70	2
41A-13140-4	9 -69	2
41A-14000-800	2 - 4	REF
	8 -	1
41A-14000-801	8 -	1
41A-14002	8 - 1	1
41A-14002-1	8 -	1
41A-14002-10	8 -	4
41A-14002-110	8 - 4	2
41A-14002-12	8 -	2
41A-14002-146	8 -14	10
41A-14002-170	8 - 2	1
41A-14002-171	8 -	1
41A-14002-238	8 -14A	4
41A-14002-84	8 - 7	4
41A-14013	8 -13	1
41A-20000	2 - 3	REF
	11 -	NP
41A-20004	11 -17	REF
	14 -	NP
41A-20004-112	14 -	1
41A-20004-113	14 -31	1
41A-20004-13	12 -26	REF
	14 -	1
41A-20004-14	14 -	1
41A-20004-2	14 -46	1

PART NUMBER	FIG AND INDEX NO	QTY /AC
41A-20004-27	14 -	1
41A-20004-28	14 -26	1
41A-20004-32	14 -48	4
41A-20004-6	14 -33	1
41A-20004-60	14 -42B	1
41A-20004-62	14 -	1
41A-20004-64	14 -	1
41A-20004-66	14 -42A	1
41A-20004-8	14 -45	1
41A-20004-804	14 -	1
41A-20004-806	14 -	1
41A-20004-808	14 -	1
41A-20004-809	14 -	1
41A-20004-82	14 -28	1
41A-20004-83	14 -	1
41A-20005-10	14 -36	2
41A-20005-12	14 -37	2
41A-20005-30	14 -38	2
41A-20005-46	14 -40	1
	77A -45	REF
41A-20005-47	14 -	1
41A-20005-48	14 -	1
41A-20005-50	14 -41	2
41A-20005-800	14 -	1
41A-21000	11 -18	REF
	12 -	1
	34 - 2	REF
41A-21000-10	12 - 5	1
41A-21000-11	12 -	1
41A-21000-2	12 - 4A	1
41A-21000-4	12 - 4B	1
41A-21000-6	12 - 4C	1
41A-21001-4	12 -	1
41A-21014	11 -13	1
41A-21021	12 -	1
41A-21021-2	12 - 1	1
41A-21023	11 -19	REF
	12 -	1
41A-21023-4	12 - 3	1
41A-22000	11 - 1	REF
41A-22000-145	12 -23	1
41A-22000-800	12 -	1
41A-22000-85	11 - 9	1
41A-22000-86	11 -	1
41A-22021	11 -	1
	12 -25	REF
41A-22021-2	11 - 2	1
41A-22021-950	11 -	
41A-22021-952	11 -	
41A-22022	12 -	1
41A-22022-2	12 - 9	1
41A-22022-950	12 -	
41A-22026	12 -16	1
41A-22029	12 -18	1
41A-22030	12 -20	AR
41A-22031	12 -	3
41A-23000-2	13 -	1
41A-23000-802	11 -11	REF
	13 -	1
41A-23000-804	13 -	1
41A-23014	13 - 5	2
41A-23019	13 - 6	2
41A-23021-2	13 -13	2
	77A -46	REF
41A-23022	11 -20	REF
	13 -	1
41A-23022-1	13 -	1
41A-23022-12	13 - 3	2
41A-23022-2	13 - 1	1
41A-23022-3	13 -	1
41A-23023	13 -17	2
41A-23026	13 -16	2
41A-23027	13 -14	1
41A-23028-30	13 - 7	1

PART NUMBER	FIG AND INDEX NO	QTY /AC
	13 -	1
41A-23028-31	13 -	1
	13 -11	1
41A-23028-32	13 -	4
41A-23028-40	13 - 8	1
	13 -	1
41A-23028-41	13 -	1
	13 -12	1
41A-23033	13 -18	2
41A-23034	13 -19	2
41A-24000	14 -	REF
41A-24000-118	13 -23	1
41A-24000-119	13 -	1
41A-24000-142	13 -29	1
41A-24000-144	13 -30	1
41A-24000-148	14 -	2
41A-24000-236	13 -24	1
41A-24000-237	13 -	1
41A-24000-282	14 -	2
41A-24000-283	14 -	1
41A-24000-284	14 -	1
41A-24000-300	13 -26	1
41A-24000-302	13 -27	1
41A-24000-314	13 -	ARAR
41A-24000-316	13 -	AR
41A-24000-318	14 -	1
41A-24000-4	13 -42	1
41A-24000-800	13 -	1
41A-24000-801	13 -	1
41A-24000-94	13 -44	1
41A-24000-95	13 -	1
41A-24000-96	13 -43	1
41A-24000-98	13 -	1
41A-24001	11 -16	REF
	13 -	NP
	77A -	REF
41A-24001-18	77A -34	2
41A-24001-56	77A -42A	1
41A-24002	13 -20	REF
	14 -	1
	78 -22	REF
41A-24002-1	13 -20A	REF
	14 -	1
41A-24002-14	14 -21	1
41A-24002-15	14 -22	1
41A-24005-801	13 -19B	1
41A-24005-802	13 -19A	1
41A-24021	77A -16	2
41A-24023	13 -31	1
41A-24027	77A -15	2
41A-24028-800	77A -	1
41A-24028-801	13 -22A	REF
	77A -	1
41A-24028-802	13 -22B	REF
41A-24029	13 -33	1
41A-24029-2	13 -	1
41A-24030	13 -37	2
41A-24031	13 -	2
41A-24031-2	13 -34	2
41A-24032	13 -	2
41A-24032-2	13 -38	2
41A-24037	14 -24	1
41A-24038	14 -25	1
41A-24040-16	14 - 3	1
41A-24040-18	14 -16	2
41A-24040-20	14 - 9	1
41A-24040-22	14 - 1	ARAR
41A-24040-24	14 - 2	AR
41A-24040-26	14 - 7	AR
41A-24040-28	14 - 8	AR
41A-24040-30	14 -15	AR
41A-24040-8	14 -19	2
41A-26000-2	61D -31	1
41A-26000-4	61D -	1

PART NUMBER	FIG AND INDEX NO	QTY /AC
41A-27305-3	61D-33	2
41A-27305-5	61D-34	2
41A-30030-2	126 -	1
41A-30055	21 -11	1
	21 -15	1
41A-30055-1	21 -	1
	21 -	1
41A-30056	21 -10	2
	21 -12	2
	21 -14	2
41A-30057	21 -43	6
41A-30057-2	21 -	6
41A-30057-4	21 -	6
41A-30058	21 -42	6
41A-30059	21 -44	6
41A-30061	21 -13	1
41A-30061-1	21 -	1
41A-30062	24 -63	1
	97 -40	REF
41A-30086	22 -14	1
41A-30086-1	22 -	1
41A-30091	24 -31	1
41A-30091-1	24 -	1
41A-30095	22 -13	2
41A-30096	22 -11	2
41A-30099	22 -15	2
41A-30114	24 -33	2
41A-30114-1	24 -	2
41A-30124	18 -	1
41A-30124-1	18 -	1
41A-30124-2	18 -21	1
41A-30124-3	18 -	1
41A-30125	18 -	1
41A-30125-1	18 -	1
41A-30125-2	18 -20	1
41A-30125-3	18 -	1
41A-30126	18 -	2
41A-30126-2	18 - 4	2
41A-30126-4	18 - 7	2
41A-30126-6	18 - 5	2
41A-30132	18 -16	4
41A-30173	24 - 1	2
41A-30174	24 -68	1
41A-30174-1	24 -	1
41A-30203	22 -36	1
41A-30203-1	22 -	1
41A-35001	2 - 4	REF
	15 -	1
41A-35002	15 - 1	REF
	16 -	1
41A-35002-950	16 -	AR
41A-35003	16 - 1	REF
	17 -	1
41A-35003-160	17 -30	2
41A-35003-212	17 -24	2
41A-35003-42	17 -25	1
41A-35003-43	17 -	1
41A-35004	16 - 2	REF
	19 -	NP
	20 -	REF
	118 -	REF
41A-35005-10	24 -59	1
41A-35005-106	24 -	1
41A-35005-107	24 -	1
41A-35005-108	24 -	4
41A-35005-112	24 -63A	4
41A-35005-114	24 -54A	2
41A-35005-12	24 -49	1
41A-35005-128	24 -64	1
41A-35005-129	24 -	1
41A-35005-13	24 -	1
41A-35005-14	24 -	1
41A-35005-15	24 -	1
41A-35005-16	24 -	1

PART NUMBER	FIG AND INDEX NO	QTY /AC
41A-35005-2	24 -48	1
41A-35005-20	24 -	1
41A-35005-22	24 -55	1
41A-35005-23	24 -	1
41A-35005-24	24 -	2
41A-35005-3	24 -	1
41A-35005-34	24 -44	1
41A-35005-36	24 -54	2
41A-35005-38	24 -52	1
41A-35005-39	24 -	1
41A-35005-4	24 -43	1
41A-35005-44	24 -	1
41A-35005-45	24 -	1
41A-35005-52	24 -65	1
41A-35005-53	24 -	1
41A-35005-54	24 -	1
41A-35005-55	24 -	1
41A-35005-56	24 -70	1
41A-35005-57	24 -	1
41A-35005-58	24 -	AR
41A-35005-6	24 -57	1
41A-35005-60	24 -66	1
41A-35005-61	24 -	1
41A-35005-8	24 -60	1
41A-35005-80	24 -	1
41A-35005-806	16 - 4	REF
41A-35005-81	24 -	1
41A-35005-814	24 -	1
41A-35006	100 -	REF
41A-35006-4	22	1
41A-35006-5	22 -	1
41A-35006-6	22 -	1
41A-35006-7	22 -	1
41A-35006-8	22 -	1
41A-35007	16 - 3	REF
	21 -	NP
	22 -	REF
41A-35007-234	22 - 8	1
41A-35007-248	22 -	1
41A-35007-249	22 -	1
41A-35007-270	22 -	1
41A-35007-292	22 -	1
41A-35007-294	22 -	1
41A-35007-296	22 -	1
41A-35007-310	22 -13B	AR
41A-35007-38	22 -24	1
41A-35007-39	22 -	1
41A-35007-42	22 -	1
41A-35007-44	22 - 2	1
41A-35007-46	22 - 3	1
41A-35007-52	22 -	2
41A-35007-54	22 -	1
41A-35009	16 -	NP
41A-35009-1	16 -	NP
41A-35010	16 -	NP
41A-35010-12	16 -32	1
41A-35020	21 -	NP
41A-35020-10	21 -23	1
41A-35020-106	21 -29B	1
41A-35020-107	21 -29B	1
41A-35020-108	21 -29A	1
41A-35020-109	21 -29A	1
41A-35020-11	21 -	1
41A-35020-12	21 -24	1
41A-35020-13	21 -	1
41A-35020-14	21 -25	1
41A-35020-16	21 -	1
41A-35020-22	21 -21	1
41A-35020-8	21 -22	1
41A-35020-88	21 -27	1
41A-35020-9	21 -	1
41A-35022	17 -	1
41A-35022-14	17 - 8	1
41A-35023	17 -	1

PART NUMBER	FIG AND INDEX NO	QTY /AC
41A-35023-12	17 - 10	1
41A-35023-13	17 -	1
41A-35023-14	17 - 12	2
41A-35023-16	17 - 11	2
41A-35024-2	17 -	1
41A-35024-3	17 -	1
41A-35024-800	17 - 15	1
41A-35024-801	17 -	1
41A-35029	21 -	1
41A-35029-170	21 -	2
41A-35029-172	21 - 9A	2
41A-35029-4	21 -	1
41A-35029-98	21 - 7	1
41A-35031	19 - 2	REF
	24 -	NP
41A-35031-102	24 - 13	2
	32 - 56	REF
41A-35031-106	24 - 15	1
	32 - 57	REF
41A-35031-120	24 - 17C	1
41A-35031-121	24 -	1
41A-35031-122	24 - 17D	1
41A-35031-124	24 - 17	1
41A-35031-126	24 -17F	1
41A-35031-128	24 -	1
	32 - 60	REF
41A-35031-2	24 - 3	1
41A-35031-30	24 - 18	1
	32 - 61	REF
41A-35031-32	24 - 16C	1
41A-35031-34	24 - 5	1
41A-35031-36	24 - 16	1
	32 - 59	REF
41A-35031-40	24 -	1
	32 - 55	REF
41A-35031-950	24 - 1C	1
41A-35037	21 -	NP
	28 - 18	REF
	113 -	REF
41A-35037-2	21 -	1
	107 -	REF
41A-35037-20	21 - 15A	1
41A-35037-200	107 - 55	1
41A-35037-202	107 - 54	1
41A-35037-220	113 - 37	1
41A-35037-222	113 - 38	1
41A-35037-228	21 - 15D	2
41A-35037-232	21 -	2
41A-35037-236	21 -15E	2
41A-35037-4	21 -15N	1
	113 -	REF
41A-35041	19 -	1
41A-35044	20 -	1
41A-35044-114	20 - 27	1
41A-35044-115	20 -	1
41A-35044-60	20 - 30	1
41A-35046	20 -	NP
41A-35046-130	20 - 38	1
41A-35046-132	20 - 37	2
41A-35046-134	20 - 37A	2
41A-35047	20 -	NP
41A-35052	19 - 27	1
41A-35052-1	19 -	1
41A-35053	24 - 2	1
41A-35053-1	24 -	1
41A-35054	20 -	NP
41A-35054-2	20 -	1
41A-35054-3	20 -	1
41A-35054-78	20 -	1
41A-35054-80	20 - 13	1
41A-35055	24 -	1
41A-35055-116	24 -	1
	27 - 43	REF
41A-35055-128	24 - 1B	1

PART NUMBER	FIG AND INDEX NO	QTY /AC
41A-35055-146	24 -	1
41A-35055-188	27 -44	1
41A-35055-74	24 - 1A	1
41A-35056-40	24 -42A	4
41A-35056-804	24 -41	1
41A-35056-805	24 -42	1
41A-35057	20 -41	1
41A-35057-1	20 -	1
41A-35059	20 -	NP
	20 -	
41A-35059-42	20 -15	2
41A-35059-50	20 -16A	2
41A-35060	20 -	NP
41A-35060-6	20 -19	1
41A-35060-7	20 -	1
41A-35061	20 -	NP
41A-35061-22	20 -14	1
41A-35061-4	20 -	1
	32 -58	REF
41A-35062	20 -34	1
41A-35062-1	20 -32	1
41A-35063	20 -26	1
41A-35063-1	20 -	1
41A-35064	16 -17	1
41A-35064-1	16 -	1
41A-35064-4	16 -	1
41A-35064-5	16 -	1
41A-35069	19 - 3	REF
	32 -	NP
41A-35069-1	32 -	NP
41A-35069-2	32 -	1
41A-35069-3	32 -	1
41A-35069-4	32 - 1	1
41A-35069-5	32 - 2	1
41A-35070	17 -	NP
41A-35070-68	17 -	1
41A-35070-69	17 -	1
41A-35070-70	17 -18A	2
	41 -12	REF
41A-35071	21 -	NP
41A-35071-110	21 - 4	1
41A-35071-2	21 -	1
41A-35071-32	21 - 1	1
41A-35071-4	21 -	1
41A-35074	19 - 8	REF
	32 -	NP
41A-35074-12	18 -40	1
	18 -48	1
	32 -22	1
	32 -31	1
41A-35074-2	32 -26	1
41A-35074-8	32 -28	1
41A-35077-10	24 - 8	1
41A-35077-12	24 - 7	1
41A-35077-4	24 - 6	1
41A-35078	21 -34	1
	22 -44	REF
41A-35078-1	21 -	1
41A-35081	19 - 7	REF
	32 -	NP
41A-35081-12	32 -19	1
41A-35081-14	32 -20	1
41A-35081-16	32 -21	1
41A-35081-2	32 -17	1
41A-35081-20	18 -	1
	32 -25	1
41A-35081-34	19 - 8A	1
	32 -24	1
	32 -62	REF
41A-35084	19 -	NP
41A-35084-1	19 -	NP
41A-35085	21 -18	2
41A-35087	21 -16	1
41A-35087-1	21 -	1

PART NUMBER	FIG AND INDEX NO	QTY /AC
41A-35088	20 -	NP
41A-35088-1	20 -	NP
41A-35088-2	20 -17	1
41A-35088-3	20 -	1
41A-35089	20 -	1
41A-35089-1	20 -	1
41A-35089-2	20 -40	1
41A-35089-3	20 -	1
41A-35091-2	21 -46	1
	65 -58	REF
	92 -14	REF
	96 -62	REF
41A-35092	16 -10	REF
	18 -	NP
41A-35092-16	18 -45	1
41A-35092-2	18 -	1
41A-35094	24 -38	2
41A-35095	16 - 5A	1
41A-35096-40	19 - 9	REF
	32 -40	1
41A-35097-144	21 -35	4
41A-35097-28	21 -	1
41A-35097-29	21 -	1
41A-35097-32	21 -	1
41A-35097-33	21 -	1
41A-35097-36	21 -	1
41A-35097-37	21 -	1
41A-35098	2 - 2	REF
	7 -	NP
41A-35098-1	7 -	NP
41A-35098-2/ST	7 -23A	1
41A-35098-3/ST	7 -	1
41A-35100	16 -13	1
41A-35101	16 -	NP
41A-35101-4	16 -	AR
41A-35102-2	118 -	NP
41A-35103	19 - 6	REF
	32 -	NP
41A-35103-26	32 -14	2
41A-35103-4	32 -	2
41A-35103-8	32 -12	2
41A-35106	19 -10	REF
	32 -	NP
41A-35106-1	32 -	NP
41A-35106-10	32 -35	2
41A-35106-18	32 -38	2
41A-35106-20	32 -36	2
41A-35106-6	32 -	2
41A-35106-8	32 -33	2
41A-35107	20 - 1	1
	32 -54	REF
41A-35109	33 -12	2
41A-35110	16 - 9	REF
	18 -	NP
41A-35110-36	18 -	1
41A-35110-6	18 -37	1
41A-35110-952	18 -	
41A-35112	17 -16	2
41A-35113	17 -17	2
41A-35114	16 -	NP
41A-35114-1	16 -	NP
41A-35114-2	16 -22	1
41A-35114-3	16 -	1
41A-35114-4	16 -23	1
41A-35114-5	16 -	1
41A-35116	17 - 3	REF
	18 -	1
41A-35116-1	18 -	1
41A-35116-800	18 -	1
41A-35116-801	18 -	1
41A-35118-2	22 -10	1
41A-35118-22	22 -	2
41A-35118-24	22 -19	2
41A-35118-26	22 -	4

PART NUMBER	FIG AND INDEX NO	QTY /AC
41A-35118-28	22 -	4
41A-35118-3	22 -	1
41A-35119-2	20 -50A	1
41A-35119-4	20 -50B	1
41A-35119-76	20 -54	1
41A-35119-80	20 -56	1
41A-35119-800	20 -	NP
41A-35120	16 -	1
41A-35120-1	16 -	1
41A-35120-68	16 -15	1
41A-35120-69	16 -	1
	100A- 8	REF
41A-35121-26	18 -34A	1
41A-35121-27	18 -	1
41A-35121-28	18 -34B	4
41A-35121-30	18 -34C	4
41A-35121-32	18 -	1
41A-35121-33	18 -	1
41A-35121-34	18 -	
41A-35121-35	18 -	
41A-35121-800	16 - 8	REF
	18 -	1
41A-35121-801	18 -	1
41A-35122-100	24 -40	1
41A-35122-115	24 -34A	1
41A-35122-148	24 -30C	1
41A-35122-154	24 -30	1
41A-35122-156	24 -18C	1
41A-35122-48	24 -21	1
41A-35122-49	24 -	1
41A-35122-54	24 -29	1
41A-35122-60	24 -24	1
41A-35122-62	24 -25	1
41A-35122-68	24 -39	2
41A-35122-72	24 -19	2
41A-35122-800	24 -	1
41A-35122-88	24 -35	1
41A-35122-89	24 -	1
41A-35122-90	24 -36	1
41A-35122-91	24 -	1
41A-35122-92	24 -	2
41A-35122-94	24 -	4
41A-35122-96	24 -37	2
41A-35123-2	22 -35	1
41A-35123-22	22 -30	1
41A-35123-23	22 -	1
41A-35125-12	42 -13	1
41A-35125-13	42 -	1
41A-35125-2	42 - 1	1
41A-35125-3	42 -	1
41A-35125-32	42 - 4	1
41A-35125-34	42 - 2	1
41A-35125-36	42 - 3	1
41A-35125-50	42 -	1
41A-35125-52	42 -	1
41A-35125-54	42 - 6B	AR
	42 - 8B	AR
41A-35125-56	42 - 6C	AR
	42 - 8C	AR
41A-35125-800	16 - 7	REF
	37 - 8	REF
	42 -	1
41A-35125-801	42 -	1
41A-35126-124	18 -	AR
41A-35126-126	18 -	AR
41A-35126-128	18 -	AR
41A-35126-130	18 -	AR
41A-35126-138	18 -33A	1
41A-35126-139	18 -	1
41A-35126-140	18 -27	2
41A-35126-34	18 -31	2
41A-35126-36	18 -29	2
41A-35126-38	18 -30	2
41A-35126-70	18 -	1

PART NUMBER	FIG AND INDEX NO	QTY /AC
41A-35126-71	18 -	1
41A-35126-72	18 -	1
41A-35126-73	18 -	1
41A-35126-74	18 -12	1
41A-35126-75	18 -	1
41A-35126-76	18 -11	1
41A-35126-77	18 -	1
41A-35126-804	17 - 1	REF
	18 -	1
41A-35126-805	18 -	1
41A-35126-84	18 -32	1
41A-35126-85	18 -	1
41A-35126-86	18 -28	1
41A-35126-87	18 -	1
41A-35127-16	17 -	1
41A-35127-17	17 -	1
41A-35127-54	17 -19	1
41A-35127-55	17 -	1
41A-35127-74	17 - 6	1
41A-35127-76	17 -21	1
41A-35127-77	17 -	1
41A-35127-90	17 -26	1
41A-35127-91	17 -	1
41A-35129-12	32 -47	4
41A-35129-16	32 -	1
41A-35129-26	32 -	1
41A-35129-27	32 -46	1
41A-35129-48	19 -11	REF
	32 -	NP
41A-35133	22 -32	1
41A-35135	17 -28	1
41A-35139	20 -	NP
41A-35140	19 - 4	REF
	32 -	NP
41A-35140-2	32 -	1
41A-35140-4	32 - 4	1
41A-35140-6	32 - 5	1
41A-35140-8	32 - 7	1
41A-35144	20 -57	1
41A-35144-1	20 -	1
41A-35146	21 -41	1
41A-35146-1	21 -	1
41A-35147-12	19 -26	2
41A-35147-16	19 -	2
41A-35147-2	19 -17	1
41A-35147-3	19 -	1
41A-35147-4	19 -18	1
41A-35147-5	19 -	1
41A-35148	19 -	NP
	48 -32	REF
41A-35148-2	19 -	1
41A-35148-3	19 -	1
41A-35148-4	19 -	
41A-35148-5	19 -	1
41A-35149	19 -	NP
41A-35149-1	19 -	NP
41A-35149-10	19 -15	2
41A-35149-12	19 -	2
41A-35152-2	19 -25	2
41A-35152-4	19 -24	2
41A-35154	19 -	1
41A-35154-1	19 -	1
41A-35154-2	19 -19	1
41A-35154-3	19 -	1
41A-35155	19 -	1
41A-35155-1	19 -	1
41A-35155-2	19 -20	1
41A-35155-3	19 -	1
41A-35156-12	34 -63	23
41A-35156-14	18 -35A	1
	18 -35A	
41A-35157	21 -38	1
41A-35157-1	21 -	1
41A-35158-32	17 - 4	2

PART NUMBER	FIG AND INDEX NO	QTY /AC
41A-35158-82	17 -	1
41A-35158-84	17 -	2
41A-35159	23 -	NP
41A-35159-1	23 -	NP
41A-35159-36	23 - 1	1
41A-35159-37	23 -	1
41A-35159-38	23 - 2	1
41A-35159-39	23 -	1
41A-35159-40	23 - 3	1
41A-35159-41	23 -	1
41A-35159-42	23 - 4	1
41A-35159-43	23 -	1
41A-35160	74 -	REF
41A-35160-168	23 -44	1
41A-35160-190	23 -17	1
41A-35160-194	23 - 6	1
41A-35160-195	23 -	1
41A-35160-206	23 -10	1
41A-35160-207	23 -	1
41A-35160-210	23 - 9	1
41A-35160-211	23 -	1
41A-35160-24	23 -43	1
41A-35160-260	23 -32	1
41A-35160-261	23 -	1
41A-35160-263	23 -28	1
41A-35160-265	23 -29	1
41A-35160-266	23 -23	1
41A-35160-267	23 -	1
41A-35160-278	23 -	1
41A-35160-280	23 -35	1
41A-35160-282	23 -36	1
41A-35160-30	2 -	1
41A-35160-31	2 -	1
41A-35160-32	2 -20	1
41A-35160-33	2 -	1
41A-35160-340	23 -37	1
41A-35160-342	23 -38	1
41A-35160-344	23 -21	1
41A-35160-348	23 -26	1
41A-35160-362	23 -	1
41A-35160-370	23 -15	4
41A-35160-372	23 -14	1
41A-35160-373	23 -	1
41A-35160-376	23 -11	1
41A-35160-377	23 -	1
41A-35160-378	23 -12	1
41A-35160-379	23 -	1
41A-35160-40	2 -13	1
41A-35160-41	2 -	1
41A-35160-414	23 -	
41A-35160-415	23 -	
41A-35160-42	2 -15	1
41A-35160-43	2 -	1
41A-35160-44	2 -16	1
41A-35160-45	2 -	1
41A-35160-46	2 -17	1
41A-35160-47	2 -	1
41A-35160-48	2 -18	1
41A-35160-49	2 -	1
41A-35160-50	2 -19	1
41A-35160-51	2 -	1
41A-35160-54	2 -12	1
41A-35160-55	2 -	1
41A-35160-804	19 - 1	REF
	23 -	NP
41A-35160-805	23 -	NP
41A-35161	2 - 6	REF
	23 -	NP
41A-35161-1	23 -	NP
41A-35161-10	23 -	1
41A-35161-11	23 -	1
41A-35161-12	23 -	1
41A-35161-13	23 -	1
41A-35161-2	2 -22	1

PART NUMBER	FIG AND INDEX NO	QTY /AC
41A-35161-20	23 -61	1
41A-35161-22	23 -57	1
41A-35161-28	23 -	1
41A-35161-29	23 -	1
41A-35161-3	2 -	1
41A-35161-30	23 -56	1
41A-35161-32	23 -	1
41A-35161-36	23 -59	1
41A-35161-38	23 -63	1
41A-35161-4	23 -	1
41A-35161-40	23 -65	1
41A-35161-6	23 -	1
41A-35161-8	23 -	1
41A-35161-80	23 -67	1
41A-35162	16 -	NP
41A-35162-1	16 -	NP
41A-35162-14	16 -14	1
41A-35162-15	16 -	1
41A-35162-16	16 -14A	1
41A-35162-17	16 -	1
41A-35162-2	16 -	1
41A-35162-3	16 -	1
41A-35162-4	16 -	1
41A-35162-5	16 -	1
41A-35164	22 -17	2
41A-35165	20 -42A	1
41A-35166	20 -	NP
41A-35166-12	20 -45	2
41A-35166-2	20 -42	1
41A-35166-3	20 -	1
	100A-	REF
41A-35166-44	20 -	8
41A-35168	16 -	NP
41A-35168-1	16 -	NP
41A-35168-2	16 -14B	1
41A-35168-3	16 -	1
41A-35168-4	16 -14C	1
41A-35168-5	16 -	1
41A-3517-2	2 -	1
41A-35170-1	2 -23	1
41A-35170-10	23 -70	1
41A-35170-12	23 -73	1
41A-35170-13	23 -	1
41A-35170-16	23 -	1
41A-35170-18	23 -	1
41A-35170-19	23 -	1
41A-35170-22	23 -	1
41A-35170-23	23 -	1
41A-35170-24	23 -74	1
41A-35170-25	23 -	1
41A-35170-28	23 -75	1
41A-35170-29	23 -	1
41A-35170-8	23 -69	1
41A-35171	18 - 1	2
41A-35171-1	18 -	2
41A-35172	18 -14	4
41A-35173	18 -22	4
41A-35174-2	19 -12A	2
41A-35174-4	19 -12B	2
41A-35177	22 -43	1
41A-35177-1	22 -	1
41A-35178-2	19 -	1
41A-35178-3	19 -	1
41A-35178-4	19 -13	1
	48 -31	REF
41A-35178-5	19 -	1
41A-35179	32 -	NP
41A-35181-6	42 -	1
41A-35181-7	42 -	1
41A-35181-8	42 - 6	1
41A-35181-9	42 -	1
41A-35182-6	42 -	1
41A-35182-7	42 -	1
41A-35182-8	42 - 8	1

PART NUMBER	FIG AND INDEX NO	QTY /AC
41A-35182-9	42 -	1
41A-35183	41 - 11	REF
	42 - 10	1
41A-35183-1	42 -	1
41A-35189	20 - 21	1
41A-35189-1	20 -	1
41A-35192	23 -	NP
41A-35192-14	23 -	1
41A-35192-16	23 -	1
41A-35192-20	23 - 19	1
41A-35192-8	23 - 18	1
41A-35193	23 - 41	1
41A-35196	20 -	1
41A-35200	20 -	NP
41A-35202	23 - 8	1
41A-35202-1	23 -	1
41A-35203	16 -	NP
41A-35203-1	16 -	NP
41A-35203-2	16 - 26	1
41A-35203-3	16 -	1
41A-35203-4	16 - 27	8
41A-35203-6	16 - 28	4
41A-35204	4 - 50A	2
	16 - 13A	1
41A-35212-800	20 - 51	2
41A-35214	19 - 37	1
41A-35214-1	19 -	1
41A-35215	19 - 36	1
41A-35215-1	19 -	1
41A-35216	19 - 38	1
41A-35216-1	19 -	1
41A-36001-800	2 - 5	REF
	33 -	1
41A-36001-802	33 -	
41A-36002-122	34 -	4
41A-36002-126	34 - 43	1
41A-36002-128	34 - 36	1
41A-36002-130	34 - 44	1
41A-36002-132	34 - 60	1
41A-36002-134	34 - 29	4
41A-36002-136	34 -	4
41A-36002-194	34 -	1
41A-36002-310	34 - 41	1
41A-36002-320	34 - 37A	1
41A-36002-322	34 - 38	1
41A-36002-324	34 - 38C	1
41A-36002-326	34 - 37C	1
41A-36002-328	34 -37E	1
41A-36002-330	34 - 37D	1
41A-36002-332	34 - 37	1
41A-36002-802	33 - 1	REF
	34 -	1
41A-36002-804	34 -	1
41A-36004	35 -	1
41A-36004-1	35 -	1
41A-36004-62	35 - 6A	2
41A-36004-64	35 - 7	2
41A-36004-66	35 -	1
41A-36004-68	35 - 1	1
41A-36005	34 -	NP
41A-36005-10	34 -	1
41A-36005-11	34 -	1
41A-36005-801	34 -	NP
41A-36006-1	34 -	NP
41A-36006-27	34 -	1
41A-36006-32	34 - 61	1
41A-36006-38	34 -	NP
41A-36007	33 -	NP
41A-36011	34 -	NP
41A-36011-108	34 -	1
41A-36011-110	34 -	1
41A-36011-120	34 - 2A	1
41A-36011-2	34 -	1
41A-36011-60	34 - 10	2

PART NUMBER	FIG AND INDEX NO	QTY /AC
41A-36011-61	34 -11	2
41A-36011-62	34 - 6	2
41A-36011-63	34 - 7	2
41A-36011-64	34 - 8	4
41A-36011-65	34 - 9	4
41A-36027	34 -	REF
	121 -	NP
41A-36027-2	121 -	1
41A-36030	34 -17	1
41A-36030-1	34 -	1
41A-36031	34 -18	1
41A-36031-1	34 -	1
41A-36032	34 -19	1
41A-36032-1	34 -	1
41A-36033	34 -20	1
41A-36033-1	34 -	1
41A-36034	34 -21	1
41A-36034-1	34 -	1
41A-36035	34 -22	1
41A-36035-1	34 -	1
41A-36038	34 -	1
41A-36038-1	34 -	1
41A-36038-2	34 -15	1
41A-36038-3	34 -	1
41A-36039	34 -	1
41A-36039-1	34 -	1
41A-36039-2	34 -16	1
41A-36039-3	34 -	1
41A-36042	34 -	REF
	76 -	NP
41A-36042-2	76 -	1
41A-36042-6	76 -52	1
41A-36044	76 -	1
41A-36044-2	76 -37	1
41A-36045	76 -41	1
41A-36046	76 -	1
41A-36046-2	11 -21	REF
	76 -42	1
41A-36051	35 - 8	1
41A-36051-1	35 -	1
41A-36052	35 - 3	2
41A-36053-2	35 - 4	1
41A-36053-3	35 -	1
41A-36053-6	35 -	1
41A-36053-7	35 -	1
41A-36054-2	35 - 5	1
41A-36054-3	35 -	1
41A-36054-6	35 -	1
41A-36054-7	35 -	1
41A-36055	34 -	NP
41A-36055-14	34 -49	1
41A-36055-15	34 -	1
41A-36055-16	34 -48	1
41A-36055-17	34 -	1
41A-36055-18	34 -47	1
41A-36055-19	34 -	1
41A-36055-20	34 -	2
41A-36055-22	34 -51	2
41A-36055-24	34 -53	4
41A-36055-26	34 -54	4
41A-36055-28	34 -55	4
41A-36055-34	34 -	2
41A-36055-36	34 -52	2
41A-36056	34 -	NP
41A-36056-10	34 -34	1
41A-36056-2	34 -	1
41A-36056-4	34 -31	1
41A-36056-6	34 -	1
41A-36056-8	34 -32	1
41A-36057	33 - 2	REF
	35 -	NP
41A-36057-1	35 -	NP
41A-36058-10	33 -	1
41A-36058-12	33 -	1

PART NUMBER	FIG AND INDEX NO	QTY /AC
41A-36058-6	33 -	1
41A-36058-8	33 -	1
41A-36059	33 -15	2
41A-36060	33 -11	2
41A-36060-2	33 -	
41A-36061-18	34 -62	1
41A-36062	34 -14	8
41A-36062-2	34 -	8
41A-36063/S	34 - 3	1
41A-36065-14	34 - 1A	1
41A-36065-66	34 -1E	1
41A-36065-68	34 - 1D	1
41A-36065-800	34 - 1	1
41A-40200	2 - 7	REF
	135C-	NP
	135D-	REF
41A-40515-6	134A-16	4
41A-40550	133 -	REF
41A-40550-13	134A-	AR
41A-40550-22	134A- 7	2
41A-40550-30	134A-52	2
41A-40550-818	134A-	NP
	135 -	REF
41A-40550-819	134A-	NP
41A-40552-106	134A-	2
41A-40552-24	134A-23	2
41A-40552-820	134A-	2
41A-40553	101 -59	REF
41A-40553-802	134A-	2
41A-40554	134A- 4	2
41A-40554-1	134A-	2
41A-40555	134A-	2
41A-40556	134A-11	2
41A-40568-2	135 -72	1
41A-40568-3	135 -	1
41A-41550	133 -	REF
	134 -	NP
41A-41550-10	134 - 9	1
41A-41550-11	134 -10	1
41A-41550-16	134 -12	1
41A-41550-18	134 -14	1
41A-41550-2	134 - 1	1
41A-41550-22	134 -16	1
41A-41550-23	134 -	1
41A-41550-24	134 -17	1
41A-41550-25	134 -	1
41A-41550-26	134 -18	1
41A-41550-27	134 -19	1
41A-41550-28	134 -	1
41A-41550-30	134 -	1
	134 -	1
41A-41550-4	134 - 2	1
41A-41550-40	134 - 7	1
41A-41550-41	134 -	1
41A-41550-44	134 -	1
41A-41550-46	134 - 6	1
41A-41550-47	134 -	1
41A-41550-49	134 -	1
41A-41550-5	134 -	1
41A-41550-56	134 - 3	1
41A-41550-57	134 -	1
41A-41550-58	134 - 4	1
41A-41550-59	134 -	1
41A-41550-6	134 - 5	1
41A-41550-60	134 -11	2
41A-41550-62	134 -15	1
41A-41550-64	134 -20	1
41A-41550-7	134 -	1
41A-41550-70	134 - 8	1
41A-41550-80	134 -18A	1
41A-41550-84	134 -13	1
41A-41560	134 -	NP
41A-41560-2	134 -22	1
41A-41560-3	134 -	1

PART NUMBER	FIG AND INDEX NO	QTY /AC
41A-41560-4	134 -	1
41A-41562	134 -27	2
41A-41565	15 -19	REF
	23 -	NP
41A-41565-2	23 -49	1
41A-41565-3	23 -	1
41A-41566	0 -	NP
41A-41566-2	0 -	1
41A-41566-4	0 - 8	1
41A-41566-6	0 -10	1
41A-42000	15 -13	REF
	93 -	NP
41A-42000-1	93 - 2	REF
	96 -	NP
41A-42000-10	93 - 6	REF
	97 -	NP
41A-42000-118	97 -34	1
41A-42000-2	93 - 9	REF
	100 -	NP
41A-42000-201	99 -	2
41A-42000-203	95 -11	1
41A-42000-211	96 -42	4
41A-42000-221	96 -15	2
41A-42000-3	93 -10	REF
	100 -	NP
41A-42000-38	95 -	2
41A-42000-5	93 - 4	REF
	96 -	NP
41A-42000-6	93 - 5	REF
	98 -	NP
41A-42000-7	93 - 8	REF
	99 -	NP
41A-42000-8	93 - 7	REF
	98 -	NP
41A-42000-83	98 - 9A	AR
41A-42000-9	93 - 3	REF
	95 -	NP
41A-42001	100 -20	1
41A-42002	92 -31	REF
41A-42002-2	100 -12	1
41A-42003	100 -16	1
41A-42004	92 -32	REF
41A-42004-800	100 -19	1
41A-42004-801	100 -	1
41A-42006-800	100 - 3	1
41A-42006-801	100 -	1
41A-42007	92 -30	REF
41A-42007-800	100 - 8	1
41A-42007-801	100 -	1
41A-42009	48 -21	REF
41A-42009-2	54 -27	REF
41A-42016	25 -	1
41A-42016-2	25 -	1
41A-42016-4	25 - 8	1
41A-42016-8	25 -	1
41A-42018	16 -11A	1
41A-42018-1	16 -	1
41A-42019	16 -11	1
41A-42019-1	16 -	1
41A-42100	15 -15	REF
	102 -	NP
	123 -	REF
	130A-	REF
41A-42100-146	103 -	4
41A-42101	15 -16	REF
	60 -	REF
	115 -	NP
	123 -	REF
	128 -	REF
	130A-	REF
	130B-	REF
41A-42101-33	115 -15	1
41A-42102	13 -	REF
	33 - 9	REF

PART NUMBER	FIG AND INDEX NO	QTY /AC
	121 -	NP
41A-42102-2	121 -	NP
41A-42102-4	14 - 35A	REF
	121 -	NP
41A-42103-54	9 -	REF
	119 -	NP
41A-42103-58	2 - 9	REF
	119 -	NP
41A-42103-59	119 -	NP
41A-42103-60	3 -	REF
	119 -	NP
	130B-	REF
41A-42103-61	119 -	NP
	123 -	REF
41A-42105	15 - 17	REF
	118 -	NP
41A-42110-2	106 -	1
41A-42110-4	103 - 29	1
41A-42112-16	105 - 22	1
41A-42112-42	105 - 24	1
41A-42112-44	105 - 23	1
41A-42112-56	105 - 25	4
41A-42112-70	105 - 21	1
41A-42112-72	105 -	1
41A-42112-82	102 - 4	REF
	102 - 2	REF
	105 -	NP
41A-42112-84	105 - 1	1
41A-42113	62 - 24	REF
	119 -	NP
41A-42114	102 - 3	REF
	102 - 3	REF
	105 -	NP
41A-42114-60	105 -	1
41A-42115	121 -	NP
41A-42117	118 -	NP
41A-42118	102 - 42	REF
	119 - 11	1
41A-42118-1	102 - 43	REF
	119 -	1
41A-42120-28	102 -	1
41A-42120-32	102 -	1
41A-42120-34	102 - 4	1
41A-42122	121 -	NP
41A-42122-30	121 -31N	1
41A-42123	102 - 13	REF
	102 - 6	2
41A-42124-19	132 - 31	8
41A-42124-800	2 - 10	REF
	132 -	NP
41A-42125	15 -	REF
	131 -	NP
41A-42126-14	131 - 4	1
41A-42126-16	131 - 6	1
41A-42126-18	131 - 7	1
41A-42126-20	106A- 56	REF
	131 - 9	1
41A-42126-26	131 - 12	1
41A-42126-28	131 - 14	1
41A-42126-30	131 - 15	1
41A-42126-32	131 - 17	1
41A-42126-34	131 - 18	1
41A-42126-36	131 - 3	1
41A-42126-38	131 - 11	1
41A-42126-4	132 - 25	1
41A-42126-40	132 - 23	1
41A-42126-42	132 - 20	1
41A-42126-8	106A- 55	REF
	131 - 1	1
41A-42127	13 -	REF
	121 -	NP
41A-42128	133 - 5A	1
41A-42129	118 -	NP
41A-42129-2	102 - 38	REF

PART NUMBER	FIG AND INDEX NO	QTY /AC
	118 -	1
41A-42130-4	102 - 5	1
41A-42130-8	102 -	1
41A-42131	102 -	NP
41A-42132-18	102 - 8	1
41A-42132-5	102 - 9	1
41A-42133	132 - 10	1
41A-42134	103 -	NP
41A-42135	121 -	NP
41A-42141	115 -	NP
41A-42143	115 - 42	1
41A-42144	115 - 43	1
41A-42147	5 - 15	1
	120 - 33	REF
41A-42148	5 - 16	1
41A-42149-4	5 - 17	3
41A-42149-8	5 - 13	14
41A-42150	106 - 26	1
41A-42150-2	106 -	2
41A-42150-4	106 -	2
41A-42151-10	5 - 10	2
41A-42151-12	5 - 12	2
	120 - 32	REF
41A-42151-14	5 - 11	2
41A-42152-32	102 - 27	REF
	115 - 28	1
41A-42152-804	115 -	NP
41A-42153-10	106 - 29	1
41A-42153-12	106 -	1
	106 -	1
41A-42153-14	106 -	1
	106 -	1
41A-42153-2	106 -	2
41A-42153-4	106 -	1
41A-42155	106 - 23	1
41A-42155-2	106 -	2
41A-42155-4	106 -	2
41A-42156	118 -	NP
41A-42157	106 -	1
41A-42158	105 - 17	1
41A-42159-2	106A- 1	6
41A-42159-4	106A- 9	1
41A-42159-6	106A- 10	1
41A-42159-8	106A- 11	3
41A-42160	118 - 5	2
41A-42166	115 -	NP
41A-42166-26	115 - 8A	1
41A-42167	119 - 3A	1
41A-42167-1	119 -	1
41A-42167-2	119 - 3B	1
41A-42167-3	119 -	1
41A-42168	107 - 6	REF
	113 -	NP
41A-42169	102 -	REF
	105 -	NP
41A-42169-38	105 - 41	1
41A-42169-810	105 -	1
41A-42170	77A- 47	REF
	121 - 50	2
41A-42171	34 -	REF
41A-42172	118 -	NP
41A-42172-2	118 - 33	1
41A-42173	34 -	REF
	121 - 37D	NP
41A-42173-2	121 -37E	1
41A-42173-4	121 -37F	1
41A-42200	15 - 2	REF
	107 -	REF
	126 -	REF
	129 -	REF
	133 -	REF
	135 -	REF
41A-42201	0 -	NP
	107 - 4	REF

PART NUMBER	FIG AND INDEX NO	QTY /AC
41A-42201-2	0 - 1	1
	102 -24	REF
41A-42201-3	0 - 2	1
41A-42201-4	0 - 5	1
41A-42201-5	0 - 6	1
41A-42202	0 -11	1
41A-42202-4	0 -13	1
41A-42203	107 - 7	REF
	108 -	NP
	127 -	REF
	130B-	REF
41A-42203-62	108 -	1
41A-42203-70	108 -	1
41A-42204-10	109A- 8	1
41A-42204-102	109A-15	1
41A-42204-12	109A-11	1
41A-42204-124	102 - 4A	1
41A-42204-126	109A- 6	1
41A-42204-14	109 -14	1
41A-42204-140	102 -21	REF
	109A- 1	1
41A-42204-15	109A-12	1
41A-42204-150	109 -15A	1
41A-42204-16	109 -10	1
41A-42204-17	109A- 5	1
41A-42204-2	102 -20	REF
	109 - 1	1
41A-42204-30	109 - 2	1
41A-42204-34	109 -13	1
41A-42204-38	109 -11	1
41A-42204-4	109 - 3	1
41A-42204-42	109 - 7	1
41A-42204-48	109A- 2	1
41A-42204-5	109A- 3	1
41A-42204-52	109A- 9	1
41A-42204-6	109 - 5	1
41A-42204-8	109 -12	1
41A-42204-804	109 -	NP
41A-42204-807	109A-	NP
41A-42205-16	127 -14	REF
41A-42205-18	108 - 6	1
41A-42205-26	108 - 5	1
41A-42205-28	108 -	1
41A-42205-30	108 - 4A	1
41A-42205-4	108 - 1	1
41A-42205-6	108 - 2	1
41A-42205-8	108 - 3	1
41A-42206-20	111 -30	1
41A-42206-4	111 -39	1
41A-42208	133 -	NP
41A-42208-2	133 - 7	2
41A-42209	133 -	NP
41A-42209-1	133 -	NP
41A-42209-26	133 - 1	1
41A-42209-27	133 -	1
41A-42209-34	133 - 3	1
41A-42209-35	133 - 3A	1
41A-42210	133 -	NP
41A-42210-26	133 - 6A	1
41A-42210-4	133 - 4	1
41A-42210-5	110 -72	REF
	133 - 5	1
41A-42211-10	133 -	2
41A-42211-12	133 -10A	2
41A-42211-14	133 -10B	2
41A-42211-16	133 -10C	2
41A-42211-2	133 -	NP
41A-42211-4	133 -	NP
41A-42211-52	133 -	2
41A-42211-6	133 -	2
41A-42211-8	133 - 9	2
41A-42212	133 -	NP
41A-42212-10	133 -14	1
41A-42212-12	133 -13	1

PART NUMBER	FIG AND INDEX NO	QTY /AC
41A-42212-16	133 - 15	1
41A-42212-20	133 - 16	2
41A-42212-4	133 -	1
41A-42212-6	133 -	1
41A-42213	133 -	
41A-42213-12	133 -	1
41A-42213-14	133 -	1
41A-42213-16	133 -	1
41A-42213-19	133 -	1
41A-42213-2	133 - 17	1
41A-42213-20	133 -	1
41A-42213-4	133 - 19A	1
41A-42213-8	133 - 19	1
41A-42214	126 -	1
	128 - 32	REF
41A-42215	126 -	1
41A-42216	126 -	NP
41A-42218	107 -	NP
41A-42219	109 -	1
	115 -	2
	130 -	1
41A-42219-2	109 -15P	1
	115 - 34	2
	130 - 47	1
41A-42220-2	0 -	9
41A-42220-6	0 -	1
41A-42220-8	0 -	1
41A-42300	15 - 12	REF
	80 -	NP
41A-42301	2 - 8	REF
	80 - 7	REF
	89 -	NP
41A-42301-1	89 -	NP
41A-42301-82	89 -	NP
41A-42301-83	89 -	NP
41A-42301-92	89 - 38A	AR
41A-42302	80 - 5	REF
	85 -	NP
	86 -	REF
	87 -	REF
41A-42303	80 - 1	REF
	81 -	NP
41A-42304	80 - 2	REF
	82 -	NP
41A-42304-2	82 -	1
41A-42304-3	82 -	1
41A-42304-68	82 - 53	1
41A-42305	80 - 4	REF
	84 -	NP
41A-42306	33 - 7	REF
	80 - 9	REF
	91 -	NP
41A-42306-46	91 - 8	2
41A-42306-50	91 -	2
41A-42306-58	91 - 7	4
41A-42307	3 - 4	REF
	80 - 8	REF
	90 -	NP
41A-42307-1	90 -	NP
41A-42309-2	45 - 31	REF
	89 - 9	4
	89 - 18	4
41A-42310-12	82 -	1
41A-42311-2	82 - 28	1
41A-42312	82 -	1
41A-42314	82 - 29	1
41A-42315-10	82 -	1
41A-42315-12	82 -	
41A-42315-14	79 - 6	REF
	82 -	
41A-42316	82 - 49	2
41A-42317	82 - 48	2
41A-42318	84 - 12	3
41A-42319	84 - 18	1

PART NUMBER	FIG AND INDEX NO	QTY /AC	PART NUMBER	FIG AND INDEX NO	QTY /AC	PART NUMBER	FIG AND INDEX NO	QTY /AC
41A-42323	80 - 6	REF	41A-42326-2	81 -11	1	41A-42333-64	87 -64	1
	88 -	NP	41A-42326-22	82 -11	1	41A-42333-66	87 -66	1
41A-42324-10	88 -36	1	41A-42326-24	82 -22	1	41A-42333-72	87 -68	1
	88 -36		41A-42326-26	82 -21	1	41A-42333-74	87 - 3	1
41A-42324-12	88 -44	1	41A-42326-30	82 -40	1	41A-42333-76	87 -36	1
41A-42324-14	88 -46	1	41A-42326-32	82 -42	1	41A-42333-82	87 -13	1
41A-42324-16	88 -28	1	41A-42326-34	82 -24	1	41A-42333-84	87 -37	1
41A-42324-18	88 -24	1	41A-42326-36	82 -23	1	41A-42333-86	87 -39	1
41A-42324-2	88 - 9	1	41A-42326-38	84 -23	1	41A-42333-88	87 -43	1
41A-42324-20	88 -30	1	41A-42326-4	81 -14	1	41A-42333-90	87 -45	1
41A-42324-22	88 -26	1	41A-42326-42	82 -44	1	41A-42333-92	87 -16	1
41A-42324-26	88 -38	1	41A-42326-44	84 -28	1	41A-42333-94	87 -18	1
41A-42324-32	88 -10	1	41A-42326-46	82 -45	1	41A-42333-950	87 - 2	1
41A-42324-34	88 -15	1	41A-42326-50	82 -13	1	41A-42333-952	87 - 2A	1
41A-42324-36	88 -21	1	41A-42326-52	82 -14	1	41A-42333-98	87 -34	1
41A-42324-38	88 -17	1	41A-42326-54	82 -20	1	41A-42337	82 -	NP
41A-42324-4	88 -14	1	41A-42326-56	84 - 3	1	41A-42339-10	86 -13A	1
41A-42324-40	88 -23	1	41A-42326-6	81 -15	1	41A-43000	119 -	REF
41A-42324-42	88 -19	1	41A-42326-62	82 -38	1		120 -	NP
41A-42324-44	88 -41	1	41A-42326-64	82 -58	REF	41A-43000-1	120 -	NP
41A-42324-46	88 -39	1		84 - 9	1		128 -	REF
41A-42324-52	88 -29	1	41A-42326-68	84 - 5	1	41A-43000-84	120 -29A	1
41A-42324-54	88 -25	1	41A-42326-70	84 - 7	1	41A-43000-85	120 -29B	1
41A-42324-56	88 -31	1	41A-42326-72	82 -19	1	41A-43000-86	120 -29C	1
41A-42324-58	88 -27	1	41A-42326-74	84 -24	1	41A-43001	121 -	NP
41A-42324-6	88 -16	1	41A-42326-76	84 -29	1	41A-43002	118 -	NP
41A-42324-60	88 -37	1	41A-42326-78	84 -26	1	41A-43003	114 -	NP
41A-42324-62	88 -34	1	41A-42326-8	81 -18	1		114A-	REF
41A-42324-64	88 -22	1	41A-42326-80	84 -30	1		115 -	REF
41A-42324-66	88 -18	1	41A-42326-82	82 -43	1		128 -	REF
41A-42324-70	88 - 8	1	41A-42326-84	82 -10	1	41A-43004	115 -	NP
41A-42324-74	88 - 5	1	41A-42326-86	84 - 1	1	41A-43010	124 -26	1
41A-42324-76	88 - 4	1	41A-42326-88	84 -10A	1	41A-43011	107 -	NP
41A-42324-78	88 -11	1	41A-42326-90	84 -10C	1	41A-43012	102 -34	REF
41A-42324-8	88 -20	1	41A-42327-22	82 -37	1		106 -	REF
41A-42324-80	88 -13	1	41A-42327-24	82 -35	1		106A-	NP
41A-42324-84	88 - 6	1	41A-42327-26	89 -	1		115 -	REF
41A-42324-86	88 -40	1	41A-42327-40	39 - 8	1		125 -	REF
41A-42324-88	88 -33	1	41A-42327-42	91 -19	1		130A-	REF
41A-42325-14	89 -22	1	41A-42327-44	91 -11	1	41A-43013	102 -11	REF
41A-42325-16	89 -	1	41A-42327-46	91 -12	1		102 -	REF
41A-42325-2	89 -27	1	41A-42327-48	91 -20	1		106 -	NP
41A-42325-22	89 -33	1	41A-42327-50	91 -13	1		117 -	NP
41A-42325-24	89 -	1	41A-42327-52	91 -14	1		125 -	REF
41A-42325-30	89 -40	1	41A-42327-8	89 -36	1		130A-	REF
41A-42325-32	89 -	1	41A-42328	90 - 5	2	41A-43014	115 -	REF
41A-42325-34	89 -44	1	41A-42332	79 -19	REF	41A-43014-92	23 -	1
41A-42325-36	89 -	1		87 -82	REF	41A-43014-94	117 -26B	1
41A-42325-38	89 -47	1	41A-42333-100	87 -11	1	41A-43015	115 -	REF
41A-42325-4	89 -	1	41A-42333-12	85 -26	1		117 -	NP
41A-42325-40	89 -	1	41A-42333-14	85 -28	1	41A-43021	130B-	NP
41A-42325-42	89 -50	1	41A-42333-16	85 -32	1	41A-43022	130B-	NP
41A-42325-44	89 -	1	41A-42333-18	87 -30	1	41A-43024-2	117 -56	1
41A-42325-46	88 -53	1	41A-42333-20	87 -26	1	41A-43024-4	117 -57	1
41A-42325-48	88 -	1	41A-42333-22	87 -70	1	41A-43025	105 -	NP
41A-42325-50	88 -56	1	41A-42333-30	87 -23	1	41A-44000	15 -10	REF
41A-42325-52	88 -	1	41A-42333-302	87 -14	1		48 -	NP
41A-42325-54	88 -58	1	41A-42333-32	87 -20	1	41A-44000-2	33 - 3	REF
41A-42325-56	88 -	1	41A-42333-324	87 -25	1		52 -	NP
41A-42325-58	90 -14	1	41A-42333-326	87 -24	1	41A-44001-2	53 -18	REF
41A-42325-6	89 -30	1	41A-42333-328	87 - 5	1	41A-44001-26	53 - 8	4
41A-42325-60	90 - 9	1	41A-42333-34	87 -53	1	41A-44001-4	33 - 4	REF
41A-42325-62	90 - 8	1	41A-42333-36	87 -55	1		53 -	NP
41A-42325-64	90 -13	1	41A-42333-38	87 -49	1	41A-44003-12	53 - 1	1
41A-42325-66	90 -	1	41A-42333-4	85 -24	1	41A-44003-6	53 - 6	1
41A-42325-68	90 -	1	41A-42333-40	87 -51	1	41A-44003-8	53 - 7	1
41A-42325-70	90 -	1	41A-42333-44	87 -32	1	41A-49051	15 -14	REF
41A-42325-72	90 -	1	41A-42333-46	87 -61	1		101 -	NP
41A-42325-74	88 -57	1	41A-42333-48	87 -60	1	41A-49051-32	101 -12	1
41A-42325-76	88 -	1	41A-42333-50	87 -41	1	41A-49052-10	101 -15	1
41A-42325-8	89 -	1	41A-42333-52	87 -47	1	41A-49052-20	101 -19	1
41A-42326-10	81 -19	1	41A-42333-56	87 -10	1	41A-49052-22	101 -20	1
41A-42326-12	81 -10	1	41A-42333-58	85 -35	1	41A-49052-26	101 -25	1
41A-42326-14	82 -12	1	41A-42333-62	87 - 9	1	41A-49052-28	101 -36	1

PART NUMBER	FIG AND INDEX NO	QTY /AC
41A-49052-30	101 -35	1
41A-49052-32	101 -39	1
41A-49052-34	101 -40	1
41A-49052-36	101 -30	1
41A-49052-4	101 -14	1
41A-49052-5	101 -14A	1
41A-49052-6	101 - 6	1
41A-49052-8	101 -15A	1
41A-49054	101 -	NP
41A-49054-1	101 -	NP
41A-49054-66	101 -	2
41A-49055	101 -49	1
41A-49056-2	101 -50	1
41A-50011-14	107 -30	1
41A-50011-16	107 -23	1
41A-50011-4	107 -33	1
41A-50704-23	130 -59	1
41A-50704-33	130 -61	1
41A-50704-34	130 -62	1
41A-50704-40	130 -	18
41A-50708	57 -22	1
41A-50709	111 -28	1
41A-50715	130 -35	1
41A-50718	111 -37	1
41A-50719	111 -42	1
41A-50723-32	112 -32	1
41A-50723-56	112 -31	1
41A-50723-60	112 -30	1
41A-50723-64	112 -29	1
41A-50728	72 -28	REF
	109 -30	1
41A-50729	129 -34	1
41A-50730	129 -48	1
41A-50731	111 -22	1
41A-50733	130 -42	1
41A-50734	111 -12	1
41A-50735	111 -	1
41A-50739	130 -39	1
41A-50761	109 -31	1
41A-50763	112 -34	1
41A-50780	109A-22	1
41A-51000	102 - 5	REF
	102 - 1	REF
	104 -	NP
41A-51000-16	104 - 6	2
41A-51000-28	104 -12	2
41A-51000-30	104 -	1
41A-51000-32	104 -17	1
41A-51000-34	104 -21	1
41A-51000-35	104 -	1
41A-51000-36	104 -16	2
	104 -20	2
41A-51000-74	104 - 4	4
41A-51202-6	111 - 1	1
41A-51204-4	111 -	1
41A-51208	111 -	1
41A-51209	111 -15	1
41A-51209-10	111 -	1
41A-51209-26	111 -	1
41A-51209-28	111 -	1
41A-51210	102 -23	REF
	111 -	1
41A-51210-4	111 -	1
41A-51212	110 -	NP
41A-51212-2	110 -	1
41A-51212-6	110 -	1
41A-51215	123 -	NP
41A-51216	123 -	NP
41A-51216-8	123 -34	2
41A-51218	123 -	NP
41A-51219	123 -	NP
41A-51220	123 -	1
41A-51220-2	123 -20	1
41A-51221	123 -19	1

PART NUMBER	FIG AND INDEX NO	QTY /AC
41A-51222	111 -14	1
41A-51222-10	111 -	1
41A-51222-2	111 -	1
41A-51222-4	111 -	1
	123 -	1
41A-51222-6	111 -	1
41A-51222-8	111 -	1
41A-51223-2	102 - 7	1
41A-51225	123 - 6	1
41A-52003	129 -	NP
41A-52003-23	129 -	1
41A-52003-24	129 - 6	1
41A-52003-25	129 -	1
41A-52003-26	129 - 5	1
41A-52003-27	129 -	1
41A-52003-28	129 - 3	1
41A-52003-29	129 -	1
41A-52003-30	129 - 9	1
41A-52003-31	129 - 9	1
41A-52003-32	129 - 8	1
41A-52003-4	129 - 2	1
41A-52003-5	129 -	1
41A-52003-78	130 -	2
41A-52003-86	129 - 4	1
41A-52003-90	130 - 1	1
41A-52004-138	130 -	2
41A-52004-808	131 -	REF
41A-52011	107 - 5	REF
41A-52011-38	113 - 2	1
41A-52011-40	113 - 1	1
41A-52011-41	113 -	1
41A-52011-42	113 - 6	1
41A-52011-44	113 - 5	1
41A-52011-45	113 -	1
41A-52011-800	102 -25	REF
	113 -	NP
41A-52012	107 -	1
41A-52013	107 -	NP
41A-52013-2	107 -	1
41A-52015	107 - 3	REF
	110 -	NP
	111 -	REF
	126 -	REF
41A-52017-800	111 -	1
41A-52018	16 -	REF
41A-52018-806	0 -	1
41A-52020	111 -	1
41A-52023	107 - 1	REF
	109 -	NP
	126 -	REF
41A-52023-86	109 -28A	1
41A-52024	107 - 2	REF
	109A-	NP
	130B-	REF
41A-52025-805	129 -	NP
41A-52025-806	129 -	NP
41A-52025-87	129 -41	1
41A-52025-88	129 -20	1
41A-52025-89	129 -	1
41A-52025-90	129 -	1
41A-52202	102 -22	REF
	110 -	NP
41A-52202-118	110 -18	1
41A-52202-12	110 - 5	2
41A-52202-120	110 -19	1
41A-52202-126	110 -14	1
41A-52202-20	110 - 7	1
41A-52202-22	110 - 9	1
41A-52202-24	110 -10	1
41A-52202-34	110 -	4
41A-52202-50	110 - 3	1
41A-52202-52	110 -	2
41A-52202-54	110 -12	2
41A-52202-56	110 -13	2

PART NUMBER	FIG AND INDEX NO	QTY /AC
41A-52202-6	110 - 1	1
41A-52202-60	110 -15	1
41A-52202-64	110 -16	1
41A-52202-76	110 -17	1
41A-52202-8	110 -	1
41A-52202-800	110 -	1
41A-52202-94	110 -21	1
41A-57000-802	106 - 1A	1
41A-57001	106 -51	REF
41A-57001-800	114 -13	1
41A-57002	106 -50	REF
41A-57002-800	114 -15	1
41A-57003-800	106 - 7	1
41A-57004	106A-39	REF
41A-57004-802	106 - 8	1
41A-57006-802	106 - 4	1
41A-57007-800	106 - 5	1
41A-57008-800	106 -10	1
41A-57009	106 -11	1
	106A-40	REF
41A-57010-800	106 -12	1
	106A-41	REF
41A-57010-802	106 -13	1
	106A-42	REF
41A-57010-804	106A-43	REF
	117 -26A	1
41A-57010-806	106 -13A	1
	106A-44	REF
41A-57011	106 - 1	REF
	106A-45	REF
	130A-20	1
41A-57011-800	130A-	1
41A-57012-802	105 -	1
41A-57013	106 -15	1
41A-57015-800	106 -16	1
41A-57017	106 -	1
41A-57019	107 -	1
41A-57020	107 -	1
41A-57100-800	114 -14	1
41A-57101-802	114 -10	1
41A-57102-802	114 - 2	1
41A-57103	114 -16	1
41A-57104-808	114A- 1	1
41A-57105	114A- 2	1
41A-57106	114A- 3	1
41A-57107-806	114 - 3	1
41A-57108	114A- 4	1
41A-57109-802	114 - 8	1
41A-57110	114A- 5	1
41A-57111	114A-	1
41A-57111-800	114A- 6	1
41A-57112-804	114 - 1	1
41A-57113-804	114A- 7	1
41A-57114	114 - 4	1
41A-57115	114A- 8	1
41A-57116-802	114 - 7	1
41A-57117-800	114A- 9	1
41A-57118-804	114A-10	1
41A-57119-802	114A-11	1
41A-57120	114A-	1
41A-57120-800	114A-16	1
41A-57121-808	114A-12	1
41A-57122-802	114A-13	1
41A-57123	114 -17	1
41A-57124	114 - 6	1
41A-57125-802	114 - 5	1
41A-57126-800	114 -18	1
41A-57127	114 -20	1
41A-57128-800	102 -26	REF
	114 -11	1
41A-57129	114 -12	1
41A-57130-802	114 - 9	1
41A-57131	114 -19	1
41A-57132	67 -	2

PART NUMBER	FIG AND INDEX NO	QTY /AC
41A-57133	110 - 56	REF
41A-57133-802	114A- 15	1
41A-57134-806	114A- 14	1
41A-57135-802	130 -	1
41A-57136-802	129 -	1
41A-57139	111 -	1
41A-57140-802	110 - 41	1
41A-57141-804	0 -	1
41A-57142-802	109 -	1
41A-57143-800	109A- 42	1
41A-57144	111 -	1
41A-57145-800	113 -	1
41A-57146	109A- 43	1
41A-57147	110 -	1
41A-57148	107 -	1
41A-57149-802	130 -	1
41A-57150	109A-	1
41A-57153	113 -	1
41A-57154	113 -	1
41A-57155	108 -	1
41A-57156	109 -	1
41A-57200	100A-	NP
41A-57200-806	118 - 13	1
41A-57201	106A- 46	REF
41A-57201-800	115 -	1
41A-57300	106A- 47	REF
41A-57300-800	118 - 15	1
41A-57301	118 - 14	1
41A-57302-806	118 - 23	1
41A-57303	118 - 16	1
41A-57304	118 - 24	1
41A-57305	118 - 17	1
41A-57306	106A- 48	REF
41A-57306-800	118 - 18	1
41A-57307	118 - 21	1
41A-57308	118 - 19	1
41A-57309	118 - 20	1
41A-57310-800	118 - 26	1
41A-57311	118 - 22	1
41A-57312	102 - 35	REF
	106A- 49	REF
	117 - 1	1
41A-57313	117 - 2	1
41A-57314	106A- 50	REF
	117 - 3	1
41A-57316	102 - 36	REF
	106A- 51	REF
	117 - 27	1
41A-57317	115 -	1
41A-57319	130B-	1
41A-57320	130B-	1
41A-57321	118 - 25	1
41A-57323-800	118 - 27	1
41A-57324-802	115 -	1
41A-57400-802	120 - 19	1
41A-57401	102 - 48	REF
	120 - 18	1
41A-57402	119 -	1
41A-57403	9 -	REF
	120 - 30	1
41A-57404	102 - 47	REF
	120 - 1	1
41A-57405	120 - 19A	1
41A-57500	120 - 20	1
41A-57501	120 -	1
41A-57502	119 -	1
41A-57503	132 -	1
41A-57600-800	102 - 49	REF
	121 - 1	1
41A-57800	78 - 21	REF
	121 - 40	1
41A-57801	121 -	1
41A-57802	102 - 50	REF
	121 -37H	1

PART NUMBER	FIG AND INDEX NO	QTY /AC
41A-58038-92	103 -	2
41A-58038-94	103 -	2
41A-58044-2	126 -	REF
41A-61100-806	48 - 1	REF
41A-61200	48 - 2	REF
	49 -	NP
41A-61200-1	49 -	NP
41A-61200-2	49 -	1
41A-61200-3	49 -	1
41A-61200-32	49 - 7A	2
41A-61200-34	49 - 7B	2
41A-61200-800	49 -	NP
41A-61200-801	49 -	NP
41A-61201	48 - 3	REF
	49 -	1
41A-61201-6	49 - 14	1
41A-61210	49 -	2
41A-61210-2	49 - 1	2
41A-61211-2	49 - 3	1
41A-61211-3	49 -	1
41A-61211-5	49 -	
41A-61212	49 - 5	1
41A-61212-1	49 -	1
41A-61213-2	49 - 2	4
41A-61213-4	49 - 2A	4
41A-61213-6	19 - 21	4
41A-61213-8	19 - 22	4
41A-61220	49 -	2
41A-61220-800	49 -	2
41A-61221	49 - 8	2
41A-61223	49 - 10	2
41A-61300	48 - 30	REF
41A-61300-18	52 - 24	2
41A-61300-36	52 -	1
41A-61300-38	52 -	1
41A-61300-72	52 - 13B	AR
41A-61300-73	52 -	AR
41A-61300-800	52 -	NP
41A-61301	52 - 1	1
41A-61304-800	52 - 13	2
41A-61305-2	52 - 8	4
41A-61305-6	52 -	4
41A-61305-8	52 -	4
41A-61306	52 -	4
41A-61306-2	52 - 4	4
41A-61308	52 - 31	2
41A-61309-2	52 - 12	1
41A-61309-58	52 - 12A	1
41A-61309-66	52 - 12B	3
41A-61309-68	52 - 12C	1
41A-61309-70	52 - 12D	1
41A-61309-72	52 -12E	1
41A-61309-802	52 -	1
41A-61310	48 - 35	REF
	52 - 27	2
41A-61311	48 - 16	1
	52 - 34	REF
41A-61312	52 - 15	2
41A-61313-6	52 - 2A	2
41A-61313-8	52 - 13A	2
41A-61314	52 - 29	1
41A-61315-10	52 -	1
41A-61315-12	34 -	NP
41A-61315-2	34 -	1
41A-61317	52 - 14A	2
41A-61318-2	52 - 2D	2
41A-61318-4	52 - 2B	1
41A-61318-6	52 - 2C	1
41A-61405	48 - 33	REF
	53 - 17	REF
41A-61407	48 - 20	REF
41A-61410	20 -	NP
41A-61410-1	20 -	NP
41A-61600	48 - 29	REF

PART NUMBER	FIG AND INDEX NO	QTY /AC
41A-65000-2	15 -	REF
	57 -	NP
41A-65000-4	33 - 5	REF
	61 -	NP
41A-65064-6	61 -12	1
41A-65200	57 -	NP
41A-65200-27	57 -28	2
41A-65200-40	57 -	2
41A-65201	57 - 1	REF
	58 -	NP
41A-65201-1	58 -	NP
41A-65201-2	57 -36	REF
	58 - 4	2
41A-65201-4	58 - 5	2
	59 -22	REF
41A-65201-6	57 -38	REF
	58 -13	2
41A-65201-75	56 -14	REF
	58 -	1
41A-65201-8	58 -23	1
41A-65202	57 - 2	REF
	59 -	NP
41A-65202-1	59 -	NP
41A-65202-24	56 -18	REF
41A-65202-31	59 -19	4
41A-65202-40	59 -18A	1
41A-65202-46	59 -17	1
41A-65202-47	59 -18	1
41A-65202-60	59 -	AR
41A-65202-62	59 -	AR
41A-65208	56 -35	REF
	61A -24	1
41A-65209-10	61A -21	1
41A-65209-12	61A -18	1
41A-65209-14	61B - 7	1
41A-65209-16	61B -12	1
	97 -45	REF
41A-65209-18	61A -46	1
41A-65209-2	61A -36	1
41A-65209-20	61A -47	1
41A-65209-24	61A -41	1
41A-65209-26	61A -40	1
	61C -16	REF
41A-65209-28	61A -12	1
41A-65209-30	59 -14	1
41A-65209-32	59 -13	1
41A-65209-34	57 -	1
41A-65209-36	56 - 7	REF
	57 -41	1
41A-65209-38	58 -50	1
41A-65209-4	61A -35	1
	61C - 8	REF
41A-65209-6	61A -	1
41A-65209-8	61A -29	1
41A-65210	56 - 5	REF
	56 -10	REF
	57 - 6	1
	58 - 6	2
	60 -30	REF
41A-65211-800	59 -7H	REF
	61A - 1	1
41A-65212	59 -21	1
41A-65212-1	59 -	1
41A-65213	59 -10	1
	59 -10A	1
41A-65221	56 - 4	REF
	56 -11	REF
	56 -13	REF
	56 -16	REF
	57 - 8	2
	58 - 2	4
	58 -42	REF
	59 - 2	2
41A-65222	59 - 5	1

PART NUMBER	FIG AND INDEX NO	QTY /AC
	61 -48	REF
41A-65225-16	58 -20	1
41A-65225-2	57 -	1
41A-65225-4	58 -19	1
41A-65225-6	57 -18	1
41A-65226	57 -11	2
	58 -43	REF
41A-65226-1	57 -	2
41A-65227	56 -12	REF
	58 - 7	2
	59 -23	REF
41A-65228	56 - 9	REF
	58 - 9	1
41A-65228-1	58 -	1
41A-65229	56 - 2	REF
	57 -25	2
41A-65230-2	58 -25	1
41A-65230-3	58 -	1
41A-65230-4	58 -26	1
41A-65230-5	58 -	1
41A-65231	58 -	1
41A-65231-1	58 -	1
41A-65232	57 -	1
41A-65232-1	57 -	1
41A-65233	57 -	1
41A-65233-1	57 -	1
41A-65234	57 -32	1
41A-65234-1	57 -	1
41A-65235	56 - 6	REF
	57 -16	1
	61 -47	REF
41A-65236	57 -19	1
41A-65237	57 -	1
41A-65238	58 -	2
41A-65239	57 -	1
41A-65239-1	57 -	1
41A-65240	59 - 7C	2
41A-65241	57 -19A	1
41A-65242	20 -	NP
41A-65242-2	20 -20A	1
41A-65242-6	20 -	1
41A-65242-7	20 -	1
41A-65242-72	20 -21A	2
41A-65242-73	20 -21B	2
41A-65242-74	20 -21C	2
41A-65242-75	20 -21D	2
41A-65243	19 - 5	REF
	58 -	NP
41A-65243-14	58 -	1
41A-65243-2	58 -27	1
41A-65243-28	58 -33	1
41A-65243-50	58 -30	1
41A-65244	57 -	NP
41A-65244-2	57 -	NP
41A-65244-4	57 -	NP
41A-65244-6	57 -	NP
41A-65244-8	57 -	NP
41A-65244-9	57 -	NP
41A-65245	57 -26	2
	58 -10	2
41A-65246	57 -31	2
	58 -24	2
	59 -15	2
41A-65253	57 -15	1
41A-65254	57 -13	1
41A-65255	58 -14	1
41A-65256	58 -15	1
41A-65257	57 -	2
41A-65259	58 -	1
41A-65259-1	58 -	1
41A-65260	57 -20A	1
41A-65261	58 -31	1
41A-65400	57 - 4	REF
41A-65400-30	60 -23	1

PART NUMBER	FIG AND INDEX NO	QTY /AC
41A-65400-50	60 -	NP
41A-65400-52	48 -27	REF
41A-65501	57 - 5	REF
	61 -	NP
41A-65501-24	61 - 4	1
41A-65501-26	61 -22	2
41A-65501-52	61 - 9	1
	61 -23	1
41A-65501-54	61 - 2	1
	61 -18	2
	61 -31	1
41A-65501-56	61 -12A	1
41A-65502	61 -	NP
41A-65502-22	61 -37	1
41A-65511	59 -24	REF
	61 -21	1
41A-65512	57 -37	REF
	61 - 1	1
41A-65513	61 -19	1
41A-65514-10	61 -24	1
41A-65514-2	56 -28	REF
	61 -17	1
41A-65514-4	61 - 8	1
41A-65514-6	61 - 3	1
41A-65514-8	56 -32	REF
	61 - 6	1
41A-65515	61 -30	1
41A-65516-12	61 -44	1
41A-65516-2	56 -31	REF
	61 -45	1
41A-65516-28	61 -43	1
41A-65516-32	61 -	1
41A-65516-4	56 -30	REF
	61 -42	1
41A-65600	57 - 3	REF
	60 -	NP
41A-65600-2	60 -	1
41A-65601	56 -19	REF
	60 - 1	1
	61 -49	REF
41A-65602	60 -	1
41A-65616	56 -21	REF
	60 - 7	1
41A-65617	60 - 6	1
41A-65618-2	60 - 9	1
41A-70240-800	125 - 1	1
41A-70241	125 - 3	1
41A-70242-800	128 - 1	1
41A-70243	125 - 4	1
41A-70244-800	125 - 4B	1
41A-70245	125 - 6	1
41A-70246-800	128 - 2	1
41A-70247	125 - 7	1
41A-70248	128 - 5	1
41A-70260	128 - 6	1
41A-70260-800	128 - 6A	1
41A-70262	128 - 7	1
41A-70263-800	110 -47	1
41A-70264-802	128 - 8	1
41A-70265	128 -6H	1
41A-70266	134A-24	2
41A-70270	125 - 8	1
41A-70271	128 - 9	1
41A-70271-800	128 -	1
41A-70272-802	128 -10	1
41A-70273-800	128 -12	1
41A-70274-800	128 -13	1
41A-70275	128 -14	1
41A-70281	128 -15	1
41A-70283	128 -19	1
41A-70286-800	128 -20	1
41A-70287-800	128 -21	1
41A-70340	125 -16	1
41A-70341	125 -17	1

PART NUMBER	FIG AND INDEX NO	QTY /AC
41A-70342	125 -18	1
41A-70343	125 -19	1
41A-70344	125 -20	1
41A-70346-800	128 -25	1
41A-70347-800	128 -26	1
41A-70349	125 -21	1
41A-70370	106A-52	REF
	125 -22	1
41A-70371	106A-53	REF
	125 -23	1
41A-70380	120 -35	REF
	123 -	REF
	125 -24	1
41A-70381	128 -29	1
41A-70382	106A-38	REF
	125 -25	1
41A-70510-2	126 -27	1
41A-71010	123 -	REF
	124 -	NP
41A-71040-18	124 - 1	1
41A-71040-20	124 -	1
41A-71040-4	124 -	1
41A-71040-8	124 -12	1
41A-71043	124 -27	REF
	125 -	1
41A-71043-2	125 - 2	1
41A-72030-802	111 -	REF
	126 -	1
41A-72070	126 -	1
41A-72070-14	126 -	1
41A-72070-16	126 -	1
41A-72070-2	126 -24	1
41A-72070-28	126 -	1
41A-72070-4	126 -25	1
41A-72070-6	126 -26	1
41A-75023	92 -19	REF
41A-75023-4	85 - 1	1
41A-75023-6	85 - 8	1
41A-75023-800	79 -11	REF
	85 -	1
	97 -39	REF
41A-75050	80 - 3	REF
	83 -	NP
41A-75050-10	65 -62	REF
	83 -13	4
41A-75050-11	83 -	4
41A-75100	82 -	1
41A-75101-800	82 -	1
41A-75102-2	79 -15	REF
	86 -	1
41A-75102-6	79 -13	REF
	86 -	1
41A-75102-800	79 -14	REF
	86 -	1
41A-75103	79 -20	REF
	88 -	1
41A-75105	79 -12	REF
41A-75105-800	85 -	1
41A-75106	79 -18	REF
	87 -	1
41A-75107-800	79 -16	REF
	86 -	1
41A-75108	79 -17	REF
41A-75111-18	83 -	1
41A-75111-20	83 -	1
41A-75112-6	83 -	1
41A-75112-8	83 -	1
41A-75113-800	79 -29	REF
	91 -	1
41A-75113-801	91 -	1
41A-75116-16	79 -27	REF
	89 -	1
41A-75116-17	89 -	1
41A-75116-18	79 -24	REF

PART NUMBER	FIG AND INDEX NO	QTY /AC
	89 -	1
41A-75116-19	89 -	1
41A-75116-30	89 -	
41A-75116-31	89 -	
41A-75116-32	89 -	
41A-75116-33	89 -	
41A-75117-800	79 -22	REF
	89 -	1
41A-75117-801	89 -	1
41A-75117-806	89 -	
41A-75117-807	89 -	
41A-75118-806	81 -	1
41A-75118-808	81 -	
41A-75119	79 -25	REF
	89 -	1
	89 -	
41A-75119-1	89 -	1
41A-75119-800	89 -	
41A-75119-801	89 -	
41A-75120	79 -28	REF
	90 -	1
41A-75120-1	90 -	1
41A-75124-800	85 -	1
41A-75126	79 -10	REF
	83 -	1
41A-75126-13	83 -15	1
41A-75126-14	83 -16	1
41A-75126-16	83 -	1
41A-75129	87 -	1
41A-75129-16	87 -90	1
41A-75129-800	87 -	1
41A-75129-802	87	1
41A-75201-10	43 -10	1
41A-75201-12	43 -	1
41A-75202-16	83 -45	1
41A-75202-18	83 -35	1
41A-75202-20	83 -34	1
41A-75202-22	83 -30	1
41A-75202-24	83 -31	1
41A-75202-26	83 -29	1
41A-75202-28	83 -26	1
41A-75202-42	83 -37	1
41A-75202-44	83 -39	1
41A-75202-46	83 -42	1
41A-75202-48	83 -38	1
41A-75202-50	83 -40	1
41A-75202-52	83 -43	1
41A-75202-8	83 -44	1
41A-75257-2	85 - 3	1
41A-75258	85 - 6	1
41A-75259	85 - 9	1
41A-75268-2	83 -14	1
41A-75268-4	83 -21	1
41A-75269	83 -17	1
41A-75270	83 -22	1
41A-75272	87 -79	1
41A-75274	20 -59	1
41A-75403	85 - 2	1
41A-75403-8	83 -20	1
41A-75404	85 -	1
41A-75404-2	85 -	1
41A-75404-4	85 -	1
41A-75405	84 -	1
41A-80200-800	95 -12	1
41A-80201	92 - 6	REF
	95 - 1	1
41A-80201-1	95 -	1
41A-80202-2	92 - 7	REF
	95 -	1
41A-80202-3	95 -	1
41A-80202-4	22 -	1
41A-80202-5	22 -	1
41A-80203-18	95 -	1
41A-80203-20	95 - 8	2

PART NUMBER	FIG AND INDEX NO	QTY /AC
41A-80203-800	92 - 8	REF
	95 - 6	1
41A-80204-20	95 -22	1
41A-80204-22	95 -21	1
41A-80204-24	95 -	1
41A-80204-802	95 -19	1
41A-80204-804	95 -18	1
41A-80204-806	92 - 9	REF
	95 -15	1
41A-85000	38 -	NP
41A-85006	37 - 4	REF
	38 - 2	REF
	39 -	1
41A-85009	39 -19	2
41A-85009-2	39 -	2
41A-85010	39 -	1
41A-85010-2	39 -17	1
41A-85010-800	39 -	
41A-85010-802	39 -	
41A-85012	39 -20	2
41A-85012-2	39 -	2
41A-85013	39 -18	2
41A-85014	39 -25	2
41A-85016	39 -	2
41A-85016-2	39 -24	2
41A-85018	38 - 7	1
	39 -23	3
	39 -28	REF
	44 -20	2
	81 -21	REF
	88 -63	REF
41A-85020-14	39 -	1
41A-85020-2	39 -21	1
41A-85021	79 - 1	REF
41A-85021-29	39 -	1
	106 -44	REF
41A-85021-50	39 -	2
41A-85021-80	39 -	1
41A-85021-82	38 - 1	REF
	39 -	NP
41A-85022	37 - 6	REF
41A-85022-12	41 -	2
41A-85022-14	41 - 4	2
41A-85023	38 - 8	REF
	41 -	NP
41A-85024	41 - 4B	2
41A-85025	41 - 4A	2
41A-85026	42 -14	REF
41A-85026-2	41 - 6	2
41A-85028	37 - 7	REF
	41 - 5	2
41A-85029-6	39 - 3B	1
41A-85036	38 - 5A	AR
41A-87500	2 - 7	REF
	38 -	NP
41A-87500-40	37 -24	REF
	38 -18	2
	45 -26	REF
41A-87500-43	38 -11A	2
41A-87500-45	38 -11D	2
41A-87500-75	44 -	
41A-87503	38 - 9	REF
	43 -	NP
	79 -21	REF
	88 -62	REF
41A-87503-37	43 -	1
	120 -34	REF
41A-87503-950	43 - 1A	2
41A-87503-952	43 - 1B	2
41A-87506-60	44 -	4
	44 -	
41A-87506-818	38 -14	REF
	44 -	1
41A-87506-819	44 -	1

PART NUMBER	FIG AND INDEX NO	QTY /AC
41A-87508-28	45 - 4A	REF
	119 -	1
	119 -23A	2
41A-87508-34	44 - 4C	REF
	119 -	1
41A-87508-41	44 -14	2
41A-87508-42	44 -15	4
41A-87508-43	44 -13	4
41A-87508-64	44 -	2
41A-87508-804	79 -23	REF
	88 -66	REF
41A-87508-808	37 -16	REF
	44 -	1
41A-87508-809	44 -	1
41A-87509	38 -17	REF
41A-87509-804	45 -	
41A-87509-805	45 -	NP
41A-87510-800	3 - 2	REF
	47 -	1
41A-87510-801	47 -	1
41A-87511	47 -	2
41A-87511-2	47 -18	2
41A-87512	47 -23	2
41A-87513	47 -25	2
41A-87514	47 -26	2
41A-87515	47 -30	2
41A-87516	47 -35	2
41A-87519-6	47 -36	2
41A-87520-30	45 -18A	4
41A-87520-31	45 -18B	2
41A-87520-42	45 -21A	REF
	119 -	2
41A-87520-804	37 -19	REF
	45 -	1
	79 -26	REF
	88 -67	REF
41A-87520-805	45 -	1
41A-87521	45 -	NP
41A-87521-1	45 -	
41A-87521-2	45 - 1	1
41A-87521-3	45 -	1
41A-87522	45 -	NP
41A-87522-2	45 -10	2
41A-87523	4 -27	2
	45 -34	REF
	88 -64	REF
41A-87524	43 -19	1
41A-87524-1	43 -	1
41A-87524-804	43 -	2
41A-87525	43 -17	2
41A-87526-2	47 -29	2
41A-87526-8	47 -	2
41A-87526-9	47 -	2
41A-87527-6	47 -	1
41A-87527-7	47 -	1
41A-87527-8	47 -34	2
41A-87528	47 -37	2
41A-87529	47 -31	2
41A-87531-16	37 -15	REF
	44 -	2
41A-87531-18	44 - 2	2
41A-87532	37 -14	REF
	44 -	2
41A-87532-2	44 - 1	2
41A-87533-10	44 -16A	1
41A-87533-8	44 -16	4
	44 -	1
41A-87534	44 - 3	2
41A-87536	44 - 1A	8
41A-87537	45 - 3A	4
41A-87537-2	45 - 5A	4
41A-87538	45 -	2
41A-87539	45 - 3B	2
41A-87540	44 -	4

PART NUMBER	FIG AND INDEX NO	QTY /AC
41A-87541	45 - 3C	4
41A-87545-2	44 - 6	2
41A-87548-20	44 - 4	2
41A-87549-12	45 -17	1
	45 -17	
41A-87549-13	45 -	1
	45 -	
41A-87549-14	45 -18	1
	45 -18	
41A-87549-15	45 -	1
	45 -	
41A-87551	38 -25	REF
	45 -	2
41A-87551-2	45 - 5	2
41A-87552	37 -21	REF
41A-87552-10	45 - 3	1
	88 -65	REF
41A-87552-11	45 -	1
41A-87552-800	45 -	1
41A-87552-801	45 -	1
41A-87553	45 - 4	2
41A-87554	45 - 6	2
41A-87556-4	37 -20	REF
	41 - 2	2
	45 - 7	2
	46 -21	REF
41A-87556-6	41 -	2
	41 -	2
41A-87557-4	41 - 1	2
	45 - 8	2
41A-87558	41 -	2
	45 -	2
41A-87562	43 - 2	1
41A-87562-1	43 -	1
41A-87563	44 -12A	4
	45 -19	4
41A-87564	38 -	2
41A-87565-10	43 - 9A	1
41A-87565-11	43 -	1
41A-87566	38 -10	2
41A-87567	38 -11	2
41A-87571	45 -20	2
41A-87571-4	44 - 4A	2
41A-87572	44 -10A	2
	45 -14B	2
	45 -14B	
41A-87574	44 -	2
41A-90004	2 - 8	REF
	15 -11	REF
	63 -	NP
	64 -	REF
41A-90005	2 -10	REF
	33 - 6	REF
	76 -	NP
	77 -	REF
	77A -	REF
41A-90006	15 -	NP
41A-90020	15 - 6	REF
	38 -22	REF
	82A -	NP
41A-90021-10	82 -57	REF
41A-90021-16	82A - 2	1
41A-90022	82A - 5	1
41A-90099-10	64 -	1
41A-90099-102	66 -	1
41A-90099-104	66 -	1
41A-90099-106	64 -	1
41A-90099-108	64 -	1
41A-90099-110	64 -	1
41A-90099-114	77 -	1
41A-90099-12	64 -	1
	76 -53	REF
41A-90099-120	64 -	1
41A-90099-122	64 -	1

PART NUMBER	FIG AND INDEX NO	QTY /AC
41A-90099-124	64 -	1
41A-90099-128	77 -	1
41A-90099-132	77A -	1
41A-90099-134	77A -	1
41A-90099-136	64 -	1
41A-90099-138	64 -	1
41A-90099-14	64 -42	REF
	77 -	1
41A-90099-140	64 -	1
41A-90099-144	63 -36	
	69 -19	2
41A-90099-148	69 -	2
41A-90099-152	69 -16	2
41A-90099-156	69 -	2
41A-90099-158	67 -	1
41A-90099-16	76 -56	REF
	77 -	1
41A-90099-160	77 -	1
41A-90099-162	75 -14	2
41A-90099-18	77 -	1
41A-90099-2	66 -	1
41A-90099-20	64 -	1
	67 -30	REF
41A-90099-202	66 -47	1
41A-90099-204	66 -41	1
41A-90099-206	64 -10	1
41A-90099-208	64 -16	1
41A-90099-210	64 -22	1
41A-90099-212	64 -28	1
	77 -43	REF
41A-90099-214	77 - 1	1
41A-90099-216	77 -16	1
41A-90099-218	77 -29	1
41A-90099-22	64 -	1
41A-90099-220	64 -13	1
41A-90099-222	64 -19	1
41A-90099-224	64 -25	1
41A-90099-226	64 -31	1
41A-90099-228	77 - 8	1
41A-90099-230	77 -23	1
41A-90099-232	77A - 1	1
41A-90099-234	77A - 8	1
41A-90099-236	64 - 1	1
41A-90099-238	64 - 4	1
41A-90099-24	64 -	1
41A-90099-240	64 - 7	1
41A-90099-242	69 -12	1
41A-90099-244	69 -	2
41A-90099-246	69 -22	2
41A-90099-248	69 -25	2
41A-90099-250	69 -14	1
41A-90099-252	69 -	2
41A-90099-254	69 -24	2
41A-90099-256	69 -28	2
41A-90099-258	67 -16	1
41A-90099-26	64 -	1
	76 -54	REF
41A-90099-260	77 -36	1
41A-90099-262	75 -	2
41A-90099-28	64 -43	REF
	77 -	1
41A-90099-30	77 -	1
41A-90099-32	76 -57	REF
	77A -	1
41A-90099-34	77A -	1
41A-90099-36	64 -	1
41A-90099-38	64 -	1
	68 -19	REF
41A-90099-4	66 -	1
41A-90099-40	64 -	1
41A-90099-42	69 -	1
41A-90099-44	69 -	2
41A-90099-46	69 -	2
41A-90099-48	69 -	2

PART NUMBER	FIG AND INDEX NO	QTY /AC
41A-90099-50	69 -	1
41A-90099-52	69 -	2
41A-90099-54	69 -	2
41A-90099-56	69 -	2
41A-90099-58	67 -	1
41A-90099-6	64 -	1
	66 -52	REF
	68 -20	REF
41A-90099-60	77 -	1
41A-90099-62	75 -	2
41A-90099-72	64 -	
41A-90099-74	64 -	
41A-90099-8	62 - 7	REF
	64 -	1
41A-90103	64 -	1
	64 -	1
	64 -	1
	64 -	1
	64 -	1
	64 -	1
	64 -	1
	64 -	1
	64 -	1
	64 -	1
	66 -44	1
	66 -49	1
	67 -	1
	69 -	2
	69 -	2
	75 -15	4
	77 - 4	1
	77 -11	1
	77 -38	1
	77A - 3	1
	77A -10	1
41A-90103-4	69 -	2
	69 -	2
41A-90151	63 - 2	REF
41A-90151-100	67 - 9	4
41A-90151-51	67 -	1
41A-90151-55	67 -	1
41A-90151-806	67 -	1
41A-90151-808	67 -	
41A-90151-950	67 -	
41A-90152	67 -	2
41A-90152-2	67 - 1	2
41A-90153	67 - 1B	2
41A-90154	67 -	2
41A-90154-2	67 - 5	2
41A-90155	67 - 4	1
41A-90156-1	67 -13	1
41A-90156-800	67 -12	1
41A-90157	67 -	2
41A-90157-2	67 -10	2
41A-90158	67 -25	2
41A-90159	67 -1E	AR
41A-90201	63 - 1	REF
	65 -	NP
	66 -	REF
41A-90201-84	66 -34A	AR
41A-90201-93	66 - 6	4
41A-90201-94	65 -53	2
41A-90208-10	66 - 5	2
41A-90209-802	65 -	2
41A-90209-803	65 -	2
41A-90210-2	65 - 1	1
41A-90211	65 -	2
41A-90211-1	65 -	2
41A-90211-2	65 - 3	2
41A-90211-3	65 - 4	2
41A-90212	65 - 2	2
41A-90213	65 - 9	8
41A-90214	65 -	4
41A-90214-2	65 - 8	4
41A-90215	65 -	2

PART NUMBER	FIG AND INDEX NO	QTY /AC
41A-90215-1	65 -	2
41A-90215-2	65 -	2
41A-90215-3	65 -	2
41A-90215-6	65 -13	2
41A-90215-7	65 -14	2
41A-90215-800	65 -	2
41A-90215-801	65 -	2
41A-90216	65 -12	4
41A-90217	65 -19	4
41A-90221-2	66 -19	2
41A-90221-4	66 -39	1
41A-90221-6	66 -38	1
41A-90222-2	66 -17	2
41A-90225	66 -21	2
41A-90226	66 -	1
41A-90226-2	66 -35	1
41A-90227	66 -	1
41A-90227-2	66 -33	1
41A-90228	66 -30	1
41A-90232	83 -47	REF
41A-90232-2	65 -16	4
41A-90233-2	40 -27	REF
	66 -31	1
41A-90236-4	67 -26C	1
41A-90236-6	67 -26	1
41A-90326	65 -39	1
41A-90327	65 -37	1
41A-90328	65 -51	1
	83 -50	REF
41A-90329	65 -	1
41A-90330	65 -49	1
	83 -48	REF
41A-90333	65 -30	1
41A-90334	65 -	1
41A-90334-2	65 -	1
41A-90335	65 -22	1
41A-90336-2	65 -31	1
41A-90336-8	65 -38	2
41A-90338	66 -24	1
41A-90339	66 -	1
41A-90340-10	65 -25	1
41A-90340-2	65 -27	1
41A-90340-4	65 -21	1
41A-90340-6	65 -23	1
41A-90340-8	65 -24	1
41A-90364	40 -22	1
41A-90367	66 -29	1
41A-90370	15 - 5	REF
	40 -	NP
41A-90371	40 -	1
41A-90371-2	40 - 7	1
41A-90372	37 - 5	REF
	40 -	1
41A-90372-2	40 - 5	1
	62 - 1	REF
41A-90373-2	40 - 1	1
41A-90374	40 -20	1
41A-90375	40 -17	1
41A-90376-2	40 -23	1
41A-90376-6	40 -21	1
41A-90377	40 -18	1
41A-90378	66 -53	REF
41A-90378-16	40 -15	1
41A-90378-20	40 -19	1
41A-90378-38	40 -14	1
41A-90378-4	40 -	1
41A-90378-800	40 -	1
41A-90378-850	40 -	1
41A-90379	40 - 3	1
41A-90380	40 - 9	1
41A-90403	62 - 5	REF
	63 -	1
41A-90403-2	63 - 4	1
41A-90404	62 - 6	REF

PART NUMBER	FIG AND INDEX NO	QTY /AC
	68 - 7	1
41A-90405-10	63 -24	1
41A-90405-12	63 -25	1
41A-90405-14	63 -26	1
41A-90405-16	63 -27	1
41A-90405-2	63 -	1
41A-90405-4	63 -	1
41A-90405-6	63 -	1
41A-90405-8	63 -	1
41A-90407	62 -10	REF
	63 -23	2
41A-90408	63 -21	4
41A-90410	63 -	NP
41A-90411	68 - 8	1
41A-90412	68 -	1
41A-90412-2	68 - 3	1
41A-90413	63 -	NP
41A-90414	68 -	1
41A-90414-2	68 - 1	1
41A-90415	62 - 9	REF
	63 -11	1
	69 -43	REF
41A-90416	68 -	1
41A-90416-2	68 - 6	1
41A-90419	63 -	1
	69 -46	REF
41A-90419-2	63 -15	1
41A-90421	64 -	1
	64 -	1
	66 -	1
	69 -	4
	69 -	4
	77 -	1
	77 -	1
	77 -	1
41A-90421-2	64 -30	1
	64 -33	1
	66 -42	1
	69 -23	4
	69 -24A	4
	77 - 2	1
	77 - 9	1
	77 -17	1
41A-90422	63 -	2
	69 -45	REF
41A-90422-2	63 -17	2
41A-90424	63 -	1
	69 -47	REF
41A-90424-2	63 -16	1
41A-90425	62 - 8	REF
	63 -	1
	64 -41	REF
41A-90425-2	63 - 9	1
41A-90426	63 - 6	1
41A-90428	68 - 5	1
41A-90429-2	68 -	1
41A-90429-4	68 -	1
41A-90429-6	68 -14	1
41A-90429-8	68 -15	1
41A-90430-10	63 -28	2
41A-90430-12	63 -33	1
	76 - 6	1
41A-90430-14	76 -32	1
41A-90430-16	76 -	1
41A-90430-18	63 - 9A	1
41A-90430-2	68 -17	2
41A-90430-20	63 -15A	1
41A-90430-22	63 -18A	2
41A-90430-24	63 -16A	1
41A-90430-26	76 -17	1
41A-90430-28	76 -24	1
41A-90430-30	69 -	2
41A-90430-32	69 -	4
41A-90430-34	69 -	2

PART NUMBER	FIG AND INDEX NO	QTY /AC
41A-90430-4	63 -27A	4
	68 -15B	2
41A-90430-40	69 -	2
41A-90430-42	74 - 5	1
	74 - 9	1
41A-90430-44	74 - 7	1
41A-90430-46	69 -	2
41A-90430-6	68 -16	1
41A-90430-8	63 -32A	2
	76 - 4	2
	76 -13	1
	76 -	1
41A-90431-2	68 -13	1
41A-90432	68 -	1
41A-90432-10	68 -11	1
41A-90435	63 - 3	REF
	68 -	NP
41A-90435-16	68 -12A	AR
41A-90436	63 -12	1
	69 -44	REF
41A-90437	63 -	NP
41A-90438	63 -	NP
41A-90439	69 -27	2
	69 -30	2
	77 - 6	1
	77 -13	1
41A-90440	66 -48	1
	69 -17	2
	69 -20	2
	77 -19	1
	77 -25	1
	77 -32	1
41A-90442	63 -	NP
41A-90443	63 -	1
	64 -40	REF
	67 -31	REF
41A-90443-2	63 -	1
41A-90443-4	63 - 5A	1
41A-90444-2	63 -	4
41A-90444-4	63 -	1
	76 - 9	1
41A-90444-6	76 -20	1
41A-90445	63 -	2
	63 -35	REF
	76 -	2
	76 -55	REF
	77 -44	REF
41A-90445-2	63 -32	2
	76 - 3	2
41A-90446	63 -30	2
	76 - 1	2
41A-90447	63 -31	1
	76 - 2	1
41A-90448	63 -	1
	76 -	1
41A-90449	67 -	1
41A-90449-2	67 -17	1
41A-90451-10	63 -29A	2
41A-90451-12	63 -10A	1
41A-90451-8	76 -36	2
41A-90452	21 -	NP
41A-90452-2	21 -30	1
41A-90452-3	21 -	1
41A-90452-4	21 -31	1
41A-90453	69 -15	2
41A-90454	76 -10	2
41A-90455	63 -	NP
41A-90456	76 -	NP
41A-90457	76 -	1
41A-90457-2	76 -12	1
41A-90458	76 -	1
41A-90458-2	76 -15	1
41A-90459	76 -11	1
41A-90460	62 -20	REF

PART NUMBER	FIG AND INDEX NO	QTY /AC
	76 -	1
41A-90461	76 -	NP
41A-90462	63 -18	4
41A-90463	76 -21	2
41A-90464	76 -22	1
41A-90465	76 -	1
41A-90465-2	76 -23	1
41A-90466	62 -21	REF
	76 -	1
41A-90467	76 -	NP
41A-90468	76 -44	1
41A-90469	77 -	1
41A-90469-2	77 -30	1
41A-90472	77 -31	2
41A-90552	76 -	NP
41A-90552-14	76 -35	8
41A-90552-2	62 -19	REF
	76 -	1
41A-90553	76 -33	1
41A-90554	76 -30	1
41A-90554-1	76 -31	1
41A-90555	13 -51	REF
	77A -33	1
41A-90601	78 -	1
41A-90601-2	78 - 6	1
41A-90601-4	78 - 7	1
41A-90602	62 -14	REF
	70 -	2
41A-90602-14	70 -28	2
41A-90602-26	70 -29	2
41A-90602-28	70 -30	2
41A-90602-6	70 -31	2
41A-90602-8	70 -32	2
41A-90603-2	78 - 5	2
41A-90603-800	13 -21	REF
	78 -	NP
41A-90603-954	78 -	AR
41A-90604	78 -12	2
41A-90604-2	78 -	2
41A-90605	78 -13	2
41A-90606	78 -	2
41A-90607	62 -23	REF
	78 -	2
41A-90607-4	78 -17	2
41A-90608	13 -22	REF
	78 -	NP
41A-90609	78 - 9	1
41A-90610	77A -36	1
41A-90610-1	77A -	1
41A-90611	77A -	1
41A-90611-2	77A -38	1
41A-90612	77A -	1
41A-90612-2	77A -43	1
41A-90613	77A -40	1
41A-90614	77A -42	1
41A-90651-800	2 - 9	REF
	3 - 3	REF
	69 -	NP
41A-90651-801	69 -	NP
41A-90651-84	69 -38	2
41A-90651-950	69 -10A	AR
41A-90651-952	69 -	AR
41A-90652	62 -11	REF
	69 -	2
41A-90652-2	69 - 1	2
41A-90653	69 -	4
41A-90653-2	69 - 2	4
41A-90654-6	69 - 5	2
41A-90654-8	69 - 4	2
41A-90655	69 -	2
41A-90655-2	69 - 3	2
41A-90657	69 -	1
41A-90657-1	69 -	1
41A-90657-2	69 - 6	1

PART NUMBER	FIG AND INDEX NO	QTY /AC
41A-90657-3	69 - 7	1
41A-90658-2	69 - 8	1
41A-90658-3	69 - 9	1
41A-90658-800	69 -	1
41A-90658-801	69 -	1
41A-90659-2	69 -10	2
41A-90660-12	69 -39	2
41A-90660-4	69 -	2
41A-90661	4 -17A	4
41A-90662	62 -12	REF
	69 -	2
41A-90663	69 -36	2
41A-90664	69 -35	2
41A-90701-4	70 -	4
41A-90701-800	9 -	REF
	70 -	NP
41A-90701-801	70 -	NP
41A-90703	9 -	1
41A-90703-1	9 -	1
41A-90703-2	9 - 7	1
41A-90703-3	9 -	1
41A-90707	9 - 4	REF
	70 -	NP
41A-90712	70 -	2
41A-90712-2	70 -11	2
41A-90717	70 -	NP
41A-90717-2	70 -19	2
41A-90718	70 -	2
41A-90718-2	70 -21	2
41A-90719	70 -24	2
41A-90720	70 -22	2
41A-90720-2	70 -	2
41A-90721	70 -23	2
41A-90722	70 -	1
41A-90722-2	70 -17	
41A-90725-12	70 -	2
41A-90725-14	70 -	2
41A-90725-16	70 - 4	2
41A-90725-6	70 - 5	2
41A-90726	70 - 7	2
41A-90727	70 - 3	2
41A-90728	9 -	2
41A-90728-2	9 -12	2
41A-90729	70 - 2	2
41A-90730	70 -	2
41A-90730-2	70 - 1	2
41A-90731	70 -13	2
41A-90732	70 - 9	2
41A-90733	78 - 4	1
41A-90733-2	78 - 2	1
41A-90734-6	9 -	2
41A-90734-8	9 - 5	2
41A-90751	15 - 7	REF
	71 -	NP
41A-90751-56	71 -48	1
41A-90752	71 -	REF
41A-90752-15	72 -	1
41A-90752-52	72 -	1
	109 -39	REF
41A-90752-804	72 -	NP
41A-90752-84	72 -	1
41A-90755-2	72 -12	1
41A-90755-4	72 -13	1
41A-90756	72 - 2	1
41A-90757	72 -10	1
41A-90758	72 - 9	1
41A-90759	72 -	1
41A-90759-2	72 -21	1
41A-90760	72 -24	1
41A-90761	72 -22	1
41A-90762-2	72 - 6	1
41A-90762-86	72 -	1
41A-90765-22	72 -1J	1
41A-90765-24	72 -1K	1

PART NUMBER	FIG AND INDEX NO	QTY /AC
41A-90765-26	72 -1F	2
41A-90765-62	72 - 1B	2
41A-90765-70	72 -1G	1
41A-90765-76	72 - 1D	1
41A-90765-78	72 -1E	1
41A-90765-802	72 - 1	1
41A-90766-6	72 -	1
41A-90766-8	72 - 4	1
41A-90767	72 -	1
41A-90767-2	72 - 3	1
41A-90768-8	73 -14	1
41A-90768-9	73 -	1
41A-90769	73 -	1
41A-90769-6	73 - 9	1
41A-90769-800	73 -	
41A-90770-6	73 -	1
41A-90770-8	73 - 6	1
41A-90771	73 - 5	1
41A-90772	72 - 1A	1
41A-90773-10	48 -25	REF
	71 -52	REF
41A-90776	71 - 3	1
41A-90777-4	71 - 2	1
41A-90777-6	71 -12	1
41A-90778-2	71 - 7	1
41A-90778-4	71 -	1
41A-90779	71 -	1
41A-90779-2	71 - 5	1
41A-90780	71 - 1	1
41A-90781	71 -	2
	72 -29	REF
	73 -18	REF
41A-90781-2	71 -	2
41A-90781-4	71 -13	2
41A-90782	73 -11	1
41A-90785	71 -	REF
	73 -	NP
41A-90785-2	73 -	1
41A-90785-4	73 -16	REF
	114A-65	1
41A-90785-6	73 -	1
41A-90786-10	73 - 2	2
41A-90786-4	73 - 1	1
41A-90790	71 -49	1
	106A-59	REF
41A-90851	15 - 9	REF
	74 -	NP
	88 -	REF
	119 -	REF
	130B-	REF
41A-90851-950	119 -17B	1
41A-90852	15 - 8	REF
	75 -	NP
41A-90853-100	74 - 3	1
	74 - 3	
41A-90855	75 -	2
41A-90855-2	75 - 5	2
41A-90855-4	75 - 6	2
41A-90856-6	74 -	1
41A-90856-8	74 - 4	1
41A-90857-6	74 -	1
41A-90857-8	62 -17	REF
	74 - 8	1
41A-90858	74 -	1
41A-90858-2	74 -22	1
41A-90859	74 -	1
41A-90859-2	74 -39	1
41A-90859-8	74 -40	1
41A-90859-800	74 -	1
41A-90861	74 -37	1
	119 -28	REF
41A-90862-12	74 -19	1
41A-90862-14	74 -20A	1
41A-90862-16	74 -20B	1

PART NUMBER	FIG AND INDEX NO	QTY /AC
41A-90862-802	74 -	1
41A-90864	88 - 2	1
41A-90865	62 -18	REF
	75 -	1
41A-90865-2	75 -10	1
41A-90866	75 -11	2
41A-90867	75 - 8	2
41A-90868-2	75 - 1	1
41A-90868-5	75 -	1
41A-90868-7	75 -	1
41A-90869	75 -12	2
41A-90872-2	75 - 4	2
41A-90873	74 -36	1
	130B-31	REF
41A-90874-2	74 - 1	1
41A-90875	74 -13	1
41A-90876	74 -	2
41A-90876-2	74 -25	2
41A-90877	74 -12	1
41A-90878	74 -24	1
41A-90879	74 -15	1
41A-90880	74 -11	1
41A-90881	74 -17	2
41A-90882	74 -33	2
41A-90883	74 -14	1
41A-90884	74 -34	1
41A-90885	74 -31	1
41A-90886	74 -	1
41A-90886-10	74 -16	1
41A-92000	25 - 1	REF
	26 -	NP
41A-92001	25 - 2	REF
41A-92001-24	27 -31	1
41A-92001-800	27 -	NP
41A-92002	15 - 3	REF
	25 -	NP
41A-92003	25 - 3	REF
	28 -	NP
41A-92003-54	28 - 4	1
41A-92004-802	30 -	1
41A-92004-804	30 -	
41A-92007	25 - 4	REF
	29 -	NP
41A-92007-30	29 - 3	1
41A-92007-32	29 -16	1
41A-92007-34	29 -17	1
41A-92007-802	29 -	NP
41A-92007-804	29 -	NP
41A-92007-806	29 -	NP
41A-92010-800	25 -15	1
	27 -41	REF
	29 -34	REF
41A-92011	26 - 9	2
41A-92012	25 - 6	REF
41A-92012-800	30 -	NP
41A-92016-2	27 -18	1
41A-92021	26 -19	2
41A-92023	26 -	2
41A-92023-2	26 - 3	2
41A-92024	26 - 6	2
41A-92025	26 -10	2
41A-92026	26 - 8	2
41A-92031	26 -15	1
41A-92032	26 -	3
41A-92032-2	26 - 1	3
41A-92033	26 -11	1
41A-92034	26 -22	2
41A-92035-800	27 -35	1
41A-92036	27 -	1
41A-92036-2	27 -11	1
41A-92037-804	27 -17	1
41A-92040	27 - 1	2
41A-92041	27 -	1
41A-92041-14	27 - 6A	1

PART NUMBER	FIG AND INDEX NO	QTY /AC
41A-92041-2	27 - 3	1
41A-92042	27 - 9	1
41A-92042-2	27 -10	1
41A-92043	27 -15	1
41A-92046	26 -21	2
41A-92047	27 -38	1
41A-92051	27 - 5	1
41A-92055-14	30 - 4	1
41A-92055-17	30 - 7	4
41A-92055-18	30 - 5	1
41A-92055-20	30 -	
41A-92055-802	30 -	1
41A-92056-4	30 -12	1
41A-92056-8	30 -11	1
41A-92056-802	30 -	1
41A-92057	28 -10	1
41A-92059	28 - 1	1
41A-92063	28 -14	1
41A-92066	28 -16	1
41A-92067-800	29 -	1
	29 -	1
41A-92067-802	29 -	1
41A-92068	29 -	1
41A-92068-2	29 - 6	1
41A-92068-4	29 - 7	1
41A-92069-2	29 - 4	1
	29 -18	1
41A-92070	29 -14	1
	29 -26	1
41A-92071	29 -12	1
	29 -24	1
41A-92072	29 -	1
41A-92072-2	29 -20	1
41A-92072-4	29 -21	1
41A-92073-2	29 - 9	1
	29 -29	1
41A-92074-2	29 -	1
	29 -23	1
41A-92074-4	29 -11	1
41A-92075	25 - 5	REF
	29 -	NP
41A-92079	26 -12	1
	27 -42	REF
41A-92079-8	26 -	1
41A-92080-2	24 -74	REF
	26 -17	2
41A-92080-4	26 -18	2
41A-92090	15 - 4	REF
	31 -	NP
41A-92090-16	31 - 9	1
41A-92090-18	31 -	1
41A-92090-27	31 -10	2
41A-92090-28	31 -11	1
41A-92090-50	31 -2E	2
41A-92090-52	31 -	2
41A-92090-54	31 -	2
41A-92095-10	31 - 8	1
41A-92095-12	31 - 7	1
41A-92095-14	31 -13	2
41A-92095-16	31 -18	2
41A-92095-4	31 - 9	1
41A-92095-6	31 - 3	1
41A-92095-8	31 - 1	1
41A-92096	31 - 2D	2
41A-92102	28 -	1
41A-92103	28 - 7	1
41A-92104	28 - 6	1
41A-92105	28 - 5	1
41A-92106	28 - 9	1
41A-92107	25 -19	2
41A-92114-2	30 -10	1
41A-92114-4	30 -	
41A-92140-2	27 -26	1
41A-92140-802	27 -	1

PART NUMBER	FIG AND INDEX NO	QTY /AC
41A-92141	27 -	1
41A-92141-2	27 -21	1
41A-92142	27 -27	1
41A-92143-2	27 -25	1
41A-92144	27 -23	1
41A-92145	27 -29	1
41A-92149-2	27 -28	1
41A-92154-2	26 -26	2
41A-92160-2	30 - 6	2
41A-95002	93 - 1	REF
	94 -	NP
41A-95200-2	96 -47	1
41A-95200-4	98 -13	1
41A-95201-10	96 -46	1
41A-95201-2	96 -45	1
41A-95202-2	96 - 1	1
	98 -40	REF
41A-95203	96 -48	1
	100 -21	
41A-95207	100 -15	2
41A-95208-4	96 - 7	1
41A-95208-800	96 -16	1
41A-95208-801	96 -17	1
41A-95211	96 -10	1
41A-95212-54	96 -33	AR
41A-95212-56	96 -35	AR
41A-95212-57	96 -	AR
41A-95212-58	96 -36	AR
41A-95212-60	96 -37	AR
41A-95212-62	96 -38	AR
41A-95212-64	96 -39	AR
41A-95212-66	96 -34	AR
41A-95212-800	92 -10	REF
	96 -	1
41A-95212-801	96 -	1
41A-95212-802	96 -	1
41A-95212-803	96 -	1
41A-95212-804	96 -26	1
41A-95212-805	96 -	1
41A-95212-806	96 -27	1
41A-95212-807	96 -	1
41A-95214	92 -11	REF
	96 - 4	1
41A-95216	98 -15	1
41A-95217-2	98 -16	1
41A-95217-4	98 -17	1
41A-95218-10	97 -31	1
41A-95218-12	97 -33	1
41A-95218-14	85 -39	REF
	97 - 7	1
41A-95218-16	61B-14	REF
41A-95218-26	97 -10	1
41A-95218-30	97 - 5	1
	97 -12	1
41A-95218-32	97 -20	1
41A-95218-36	97 - 3	1
41A-95218-38	97 - 8	1
41A-95218-6	97 -16	1
41A-95218-8	97 -24	1
41A-95219-10	21 -26	1
41A-95219-12	21 -	1
41A-95220	96 -61	REF
	98 - 5	1
41A-95222	98 -10	1
41A-95700	96 -	2
41A-95700-2	96 -28	2
41A-95700-4	96 -29	2
41A-96201-16	99 - 3A	1
41A-96201-18	99 - 1	1
41A-96201-2	99 - 3	1
41A-96201-4	99 - 2	1
41A-96202	23 -77	REF
41A-96202-2	23 -	NP
41A-96202-4	20 -	NP

PART NUMBER	FIG AND INDEX NO	QTY /AC
41A-96202-42	20 - 7	2
41A-96202-44	20 - 8	2
41A-96202-46	23 -71	1
41A-96202-48	20 - 6B	1
	92 -28	REF
	98 -37	REF
41A-96202-50	20 - 9	1
41A-96202-52	20 -10	1
41A-96202-54	20 -12	1
41A-96202-56	20 -11	1
41A-97200	94 - 5	1
41A-97201-10	94 -10	1
41A-97201-12	94 -12	1
41A-97201-3	94 -13	1
41A-97201-4	94 -15	1
41A-97201-6	94 - 9	1
41A-97201-8	94 -18	1
41A-97202	94 -21A	2
41A-97203-2	92 - 4	REF
	94 -20	2
41A-97204	94 -21	2
41A-97205	92 - 3	REF
	94 -14	2
41A-97206	92 - 5	REF
	94 -24	1
41A-97207	94 - 1A	1
41A-97700	92 -15	REF
	97 -	1
41A-98206	48 -24	REF
	92 -27	REF
	99 -18	1
41A-98207-2	98 -30	1
41A-98207-4	97 -43	REF
	98 -32	1
41A-98207-800	95 -19A	1
41A-98208-2	99 -13	1
41A-98208-20	99 -11	1
41A-98208-4	98 -39	REF
	99 -10	1
41A-98209	99 -16	1
41A-98210	95 -26	REF
	99 - 7	1
41A-98212-18	95 -13	1
41A-98212-36	98 -26	1
41A-98213	99 -20	1
41A-99000	15 -18	REF
	54 -	NP
41A-99005	33 - 8	REF
	55 -	NP
41A-99200	54 -	NP
41A-99200-10	54 - 2	1
41A-99200-2	54 - 1	1
41A-99201-4	54 -13	2
41A-99202-2	48 - 5	REF
	54 -24	1
41A-99202-24	54 -12	3
41A-99202-26	54 -12A	3
41A-99202-28	54 -14	1
41A-99202-4	48 -23	REF
	54 -17	1
41A-99202-42	54 -18	1
41A-99202-44	54 -	1
41A-99202-50	54 -	1
41A-99202-6	48 -22	REF
	54 - 5	1
41A-99202-60	54 -	
41A-99204-2	54 - 4	1
41A-99206	54 -20	1
41A-99206-20	54 -22	2
41A-99207	48 -	1
41A-99208	48 -	1
	55 -24	REF
41A-99209-12	55 - 2	4
41A-99209-18	55 - 7	1

PART NUMBER	FIG AND INDEX NO	QTY /AC
41A-99209-19	55 -	1
41A-99209-2	55 -	1
41A-99209-24	55 - 9	2
41A-99209-26	48 -19	REF
	55 -12	1
41A-99209-3	55 -	1
41A-99209-4	55 - 4	1
41A-99209-40	55 -16	2
41A-99209-44	55 -17	2
41A-99209-46	55 -21	1
41A-99209-5	55 -	1
41A-99209-50	55 - 3	1
41A-99209-51	55 -	1
41A-99209-52	55 - 1	1
41A-99209-53	55 -	1
41A35007-42	31 -25	REF
41A65209-22	61A -43	1
41A90603-14	78 -16	2
41G-27200-2	61D -	2
41G-27200-3	61D -	2
41G-27200-62	61D - 2	2
41G-27200-63	61D -	2
41G-27200-810	56 -40	REF
	61C -17	REF
	61D -	NP
41G-27200-811	61C -18	REF
	61D -	NP
41G-27201-12	61D -23	1
41G-27201-4	61D -22	1
41G-27201-5	61D -	1
41G-27202	61D -25	1
41G-27202-1	61D -	1
41G-27206-2	61D - 6	4
41G-27207	61D - 4	2
41G-27210	61D - 3	2
41G-27210-1	61D -	2
41G-27211	61D -38	2
41G-27212-3	61D - 1	2
	61D -	2
41G-27212-4	61D -	2
41G-27212-5	61D -	2
41G-27220	61D - 9	2
41G-27220-1	61D -	2
41G-27221	61D - 8	2
41G-27221-1	61D -	2
41G-27222	61D - 7	2
41G-27222-1	61D -	2
41G-27223-10	61D -14	2
41G-27223-12	61D -15	2
41G-27223-16	61D -19	2
41G-27223-2	61D -17	2
41G-27223-4	61D -12	2
41G-27225-800	61D -	2
41G-27226	61D -42	1
41G-27227	61D -46	2
41G-27228	61D -43	2
41G-27305-24	56 -41	REF
	61D -32	1
41G-27305-810	61D -	1
41G-27307-4	61D -10	8
41G-27330-2	61D -45	2
41G-27332	61D -37	2
41G-27334-10	61D -36	2
41G-27335	61D -	2
41G-27407	61D -27	2
41G-35032	19 -	2
	19 -	2
	19 -	4
41G-35043	19 -31	2
	61D -51	REF
41G-35043-2	19 -	2
41G-65009	61A - 9	1
41G-65010	61A - 4	2
	61A -10	1

PART NUMBER	FIG AND INDEX NO	QTY /AC
41G-65011	61A- 27	1
	61C- 9	REF
41G-65011-1	61A-	1
41G-65016	61A- 48	1
41G-65017	61A- 49	1
41G-65022	61C- 2	2
41G-65023	61C- 10	2
41G-65024	61C- 5	2
41G-65025	61C- 13	2
41G-90010-2	67 - 15	1
41G-90010-4	67 - 15A	1
42232	118 -	1
	118 -	1
	121 -	2
42233	118 -	2
	121 -	2
42FW820	33 -	2
42FW918	33 -	2
4352D4	134A- 21	4
44-51440-2	103 - 34	2
	106 - 43	REF
44-62799	57 - 13A	1
	57 - 15B	1
	58 - 16B	2
44-A17830	21 -	2
44-A17831	21 - 49	2
44-A17832	21 - 50	2
44-A17833	21 - 48	2
44-A17834	21 - 47	2
44-A17835	21 -	2
44-A17836	21 - 51	2
442-4-6-8	132 - 27	15
443-4-2-8	106A- 31	2
443-6-2-8	106A- 6	7
443-6-2-8HT	118 - 28	2
443-7-2-8	106A- 15	7
443-8-2-8	117 -26F	10
443E4-2-6	72 - 20A	2
445-3-7-2-8	106A- 54	REF
	125 - 31	10
445-4-6-2-8	106A- 57	REF
	131 - 29	6
45000-14	111 - 35	1
453-16-10	60 - 8	1
456672-1	141 - 16	1
456675-1	136 -	1
456676-1	141 - 17	1
456678-1	135C- 14	1
456680-1	135C-	2
456681-1	135C-	1
456682-1	135C-	1
456684-1	135C-	2
456685-1	135C- 10	2
456686-1	136 - 11	1
456687-1	136 -	1
456688-1	136 -	1
4571	102 - 1	REF
	103 - 28	1
458-4SS27-6	30 - 23	1
	30 - 27B	2
45958-10	102 - 15	REF
	108 - 8	
462W4096	89 - 23	2
462W4097	91 - 3	2
462W4098	87 - 65	1
4681	110 - 67	1
472	53 - 16	AR
475C62NXW	56 - 25	REF
	60 - 22	1
49200	125 - 17A	1
4P10-12	56 - 34	REF
	61A- 11	1
5-102	25 -	2
5006305	37 - 12	REF

PART NUMBER	FIG AND INDEX NO	QTY /AC
	43 -24	2
5006306-2	43 -	2
50065-1	85 -	1
501-100	98 -33B	1
501-1361-03	107 -68	1
501-250	96 - 5	1
	98 -	1
	98 -24A	1
50175-200	57 -39	REF
	60 -13	3
502563-24-6/64	48 -10	1
504-350	98 -34	1
	99 -25	REF
5071-1-1/AIC504	126 -53	1
508-7545-504	129 -56	1
52-1650-02	20 -	8
	47 -	4
522-2447-552	123 -30	1
522-4408-207	126 -11	1
52869-150	48 -12	1
52LH2935-048	20 -	12
52N1610-02	113 -	4
5335-1	115 -48	1
552-1932-003	126 -42	1
555748-1	135D-	2
555749-1	135D-	1
555750-1	135D-	1
555751-1	142 -	1
555792-1	142 -	1
555793-1	139 -	1
555794-1	135C-	1
555797-1	142 -	1
555798-1	142 -11	1
555800-1	142 -12	1
555801-1	142 -15	1
555802-1	142 -	1
555803-1	142 -	1
555815-1	143 -20	1
555816-1	143 -18	1
555817-1	143 -22	1
555818-1	143 -	1
555822-1	143 -	1
555823-1	143 -25	1
555824-1	143 -26	1
555825-1	143 -29	1
555826-1	143 -31	1
555827-1	143 -33	1
555828-1	143 -32	1
555829-1	143 -30	1
555830-1	139 -	2
	141 - 1	2
555830-10	139 -	1
	139 -	1
	141 -10	1
555830-11	139 -	1
	141 -11	1
555830-12	139 -	2
	141 -12	2
555830-13	139 -	1
	141 -13	1
555830-14	139 -	3
	141 -14	1
555830-15	139 -	1
	141 -	1
555830-2	139 -	1
	141 - 2	1
555830-3	139 -	1
	139 -	1
	139 -	1
	141 - 3	1
555830-4	139 -	1
	141 - 4	1
555830-5	139 -	1
	141 - 5	1

PART NUMBER	FIG AND INDEX NO	QTY /AC
555830-6	139 -	2
	141 - 6	2
555830-7	139 -	1
	141 - 7	1
555830-8	139 -	1
	139 -	1
	141 - 8	1
555830-9	139 -	1
	141 - 9	1
555833-1	138 -	1
555834-1	138 -16	1
555835-1	138 -22	8
555836-1	138 -25	2
555837-1	138 -27	1
555837-2	138 -	1
555838-1	138 -19	2
555839-1	138 -20	2
555840-1	138 -	2
555841-1	138 -29	1
555842-1	138 -17	2
555843-1	138 -18	2
555852-1	139 -	1
555853-1	139 -	1
555854-1	139 -	1
555855-1	139 -	1
555856-1	141 -	1
555861-1	135D-	2
555866-1	140 -	1
555867-1	140 -	1
555868-1	142 -26	1
555870-1	139 -	1
555871-1	139 -	1
555872-1	139 - 1	1
555872-2	139 - 4	1
555872-3	139 -17	1
555872-4	139 -30	1
555873-1	139 -	1
555874-1	139 -	1
555875-1	143 -	1
555876-1	135D-	1
555877-1	135D-	1
577-100	105 -33	1
	106 -46	REF
57989-10-1078SH	60 -	
57989-12-1078	60 -	
58078	52 - 1A	1
583-3/4D1	96 -54	2
59911	83 -23	1
5R2-1	124 -	2
5S1-4	124 -13	2
5S3-1	124 -	2
6-403	136 -17	1
600-015-10-0S	57 -	4
	58 -	2
	58 -	4
601-100-SH	98 -33A	1
601-350SH	98 -36	REF
	99 - 6	1
601002-20D0240	56 -29	REF
60115M	85 -16B	1
602261-1	138 -	1
602262-1	138 -39	1
602263-1	138 -40	2
602264-1	138 -	1
602265-1	138 -31	1
602266-1	138 -30	1
602267-1	138 -33	2
602268-1	138 -36	1
602268-2	138 -38	1
602269-1	138 -37	1
602270-1	138 -43	2
602270-2	138 -	2
602271-1	138 -32	1
602272-1	138 -41	2

PART NUMBER	FIG AND INDEX NO	QTY /AC
602273-1	138 -	1
602274-1	138 - 8	1
602275-1	138 -	1
602276-1	138 - 7	2
602277-1	138 - 9	4
602278-1	138 -	1
602279-1	138 -	4
602280-1	138 -15	1
602281-1	140 -	1
602281-2	140 - 1	1
602281-3	140 - 2	2
602282-1	135D- 2	2
602282-2	135D- 3	2
602282-3	135D-12	1
602282-4	135D-15	1
602283-1	140 -	1
602284-1	141 -15	1
602287-1	139 -47	1
602288-1	139 -43	1
602289-1	139 -48	1
602290-1	139 -45	1
602291-1	139 -44	1
602293-1	135D- 1	1
602294-1	135D-11	1
602295-1	143 -	1
602296-1	143 -35	1
602297-1	143 -36	1
602298-1	143 -	1
602299-1	143 -38	1
602300-1	143 -37	1
602301-1	143 -39	1
602302-1	143 -34	1
602306-1	142 -	1
61919-2	130 -46	1
620-042-4	89 -	1
	89 -	1
6206-1	107 -16	1
	130B-14	1
	130B-22	1
6207-1	130B-15	1
	130B-23	1
6208-1	130B-24	1
622-1396-002	123 -25	1
622-6812-001	123 -45	REF
622-6812-003	123 -	REF
	128 - 9	1
622-6813-001	111 -44	REF
	126 -51	REF
	128 -34	1
622-6813-003	111 -	REF
622-6820-001	123 -47	REF
	128 - 5	1
622-7210-002	123 -46	REF
	128 -10	1
623-9614-001	128 - 8	1
63224A	85 -16C	1
6350-1	5 -78	REF
	90 - 1	2
63X1327	67 - 1C	2
63X565	66 -36A	1
63X700	68 - 6A	1
6500-17	39 - 1	1
6500-7	37 - 1	REF
653278	123 -43	REF
	125 -36	REF
	130A- 5	1
656767	130B-28	1
661102B	109A-27	1
	109A-27A	1
664543	102 -40	REF
	119 -26	REF
	130B-27	1
668-3-8FR	114A-29	2
67-06C20-37S	123 - 3	1

PART NUMBER	FIG AND INDEX NO	QTY /AC
67-06E18-24S	128 -	2
673447	102 - 6	REF
	123 - 44	REF
6770-3	79 - 4	REF
	82 - 1	1
6802-1	130B- 11	1
	130B- 18	1
6805-1-1/4	135D- 4	4
	135D- 10	2
	135D- 13	1
	135D- 16	1
6810-1	117 -	1
	117 -	1
	130B- 13	1
	130B- 21	1
6811-1	117 -	1
6817-1	130B- 10	1
	130B- 17	1
6825-1	130B- 12	1
	130B- 20	1
682565-1	92 - 24	REF
	98 -	1
683204	98 - 23D	1
6833-1	117 -	1
	117 -	1
	117 -	1
	117 -	1
6841-1	114 -	1
	117 -	1
	117 -	1
6900-1	89 -	
6930A/16-21B	123 -	1
7000	48 -	AR
	100 -	AR
700040	85 - 19	1
700070	48 - 28	REF
	56 - 24	REF
	60 - 18	1
7000G	54 - 10	AR
	54 - 24B	AR
701004	86 - 20A	1
	86 - 26	1
702000	86 - 20	1
	86 - 25	1
70775-1	65 - 60	REF
	79 - 8	REF
	83 -	1
70775-2	83 - 5	1
70776	79 - 7	REF
	83 - 1	2
70777	65 - 59	REF
	79 - 9	REF
	83 - 8	4
710043-350-13	99 - 5	1
712329-15-14	95 - 7	2
712329-2-14	95 - 20	6
	99 - 26	REF
712359-501	98 - 25	1
737TW	98 -23E	2
738-14-8	131 - 26	2
7402	48 -	AR
	54 -	AR
	54 -	AR
751S34-8	95 - 16	1
754WE3-2-8	117 - 19	3
754WE7-2-8	117 - 18	2
755-13-2-8	61 - 15	2
755-6-2-8	59 - 16	2
755-6-2-8HT	91 - 17	8
	91 - 21	6
755SS20-2-8SF	61 - 33	1
	61 - 39	3
755SS23-2-8SF	61 - 36	1
77M1P8	109 -	2

PART NUMBER	FIG AND INDEX NO	QTY /AC
	109A-	2
782-1-6HT	91 - 23	2
7940102	107 -	1
7940103	107 -	1
7940104	107 -	1
7C11-4	118 - 11	99
	118 - 12A	10
	121 - 27	150
	121 - 31A	1
	121 - 31B	13
	121 -31F	14
	121 -31T	2
7OO96	60 - 18D	1
8	135 -	2
80	23 - 50	AR
	23 - 55	AR
80-21N320	24 -	AR
80-320	24 - 77	AR
	134 - 24	8
	134 - 25	8
8001	21 - 53	1
800111	85 -	1
8001R	113 - 29	1
802-110	27 - 39	1
8022Y0C	29 - 33	1
8040008	0 - 25C	1
81-22-20	128 - 36	REF
	130 - 17	1
8135-21-805-9886	134A-	AR
8140309-1	107 - 62	1
8140316-X	107 -	NP
8140344-1	130 -	1
8140344-2	130 - 19A	1
82-F1113	123 -	1
	123 -	1
82-F1115	123 -	1
823-17	99 - 5A	2
8240304-1	133 - 24	2
8240305-1	133 - 25	2
8240306	133 -	2
8240310-1	133 - 26	2
826RNMR	133 - 8	2
8300/300	48 - 34	REF
	118 - 4	1
8315-21-820-0326	134A-	1
8315-21-820-5670	134A- 44	1
8406F	87 - 75	1
8406L	87 - 83	1
8432-1-1/2	135C- 9	2
	135C- 13	1
8432-1-1/4	142 - 35	1
85020-2	92 - 23	REF
	98 - 8	1
8525596	112 - 44	1
8525596-1	0 -25E	1
8525597-1	114 -	NP
859A6TT	61B- 5	2
869A12TT	61A- 25	2
88	55 - 14	AR
8916K703	109 - 33	2
8916K759	129 - 46	1
8925056-1	144 - 23	2
9-0810-11	144 - 16	3
9-0810-21	139 - 46	1
9-1010-11	143 - 13	1
90000	125 - 39	REF
	130A- 6	1
901-275-1-5ASH	39 - 13	1
9040243-1	135C- 18	2
9040244-1	135C-	1
9040245-1	135C-	1
9040246-1	135C-	1
9040247-1	135C-	1
918604	107 - 59	6

PART NUMBER	FIG AND INDEX NO	QTY /AC
9220-4249	109 - 23	6
	110 - 82	1
	126 - 37	1
9224-3951	110 - 29	1
9225-4416	103 - 46	2
9225-7221	110 - 32	1
9226-3887	126 - 14	4
	126 - 40	2
9226-4	118 -	1
9228-4424	109 - 22	1
9320-21-807-2984	134A-	AR
9330-4027	109A- 23	2
9385	103 - 31	1
	121 - 16	1
94-3-1	30 - 2	1
	31 - 24	REF
94-5-1A	25 - 16	1
	25 - 20	2
	26 - 28	REF
	30 - 44	REF
9440232	133 - 21B	1
9470K61	96 - 2	1
	96 - 8	2
9533247	37 - 2	REF
	39 - 15	1
9535-21-813-8521	135 - 75	2
9535-21-813-8544	7 - 9A	2
9555A	104 - 18	2
	104 - 22	2
960870	101 - 1	2
A1037-012-3	94 - 22	2
A120-129	111 -	1
A13A2	130 - 20	1
A3135-017-24A	109 -	37
	133 -	10
	133 -	8
A3235-020-24A	7 -	84
A3235SS020	7 -	8
A4174-24C	106 -	1
A451-2	130 - 31	1
A4A1B1-071	7 - 22	1
A4A1B1-100	7 - 22A	1
A50900-076	110 - 71	1
A50M6-4	130 - 30	1
A5506	82A- 10	3
A6745C24	129 - 25	1
A6815C24	130 - 20A	1
	130 -	8
A6912-832-1	9 - 35	1
A7165-1	109 - 34	3
	111 - 41	3
A7165-1-327	72 - 25	2
	109 - 38	REF
A848KBH	103 - 52	1
AA1801-1	27 - 8	2
AA224-1	77A- 39	3
AA401-1	72 -	1
AA521	72 -	1
AA607-2	27 - 7	2
AA607-3	27 - 14	1
AA6344	70 - 18	1
AB648	143 - 19	1
AC106-1P	130 - 28	1
AC356-518	19 -29E	25
	19 -	6
	20 -13F	4
	20 -	4
	20 -	8
	20 -	12
	20 -	12
	21 -15N	10
	21 -	4
ADB4V	9 - 6	2
	41 - 4C	2

PART NUMBER	FIG AND INDEX NO	QTY /AC
	42 - 6A	2
	42 - 8A	2
	72 -	2
ADB8V	5 -35	2
ADD3721R12	134A-	2
ADNE4JW	69 -40	2
ADNE6JW	90 - 1A	1
ADNEL4J	69 -37	2
	69 -41	2
AE1000612B0090	97 -28	1
AE1000612E0210	97 -26	1
AE1000616E0144	131 -40	4
AE1000616E0150	131 -33	1
AE1000616E0154	131 -32	1
AE1000616E0160	131 -35	5
AE1000616E0180	131 -37	1
AE1000616E150	131 -47	1
AE1002208E0045	30 -18	1
AE1002208E0063	30 -21	1
AE1002208E0076	30 -13	2
AE1002208E0243	30 -28	1
AE1002208E0452	30 -29	1
AE1002208G0160	52 -30	1
AE1002256E0047	43 - 7	2
AE1002256E0073	90 -16	2
AE1002256E0076	89 -42	2
AE1002256E0084	89 -29	2
AE1002256E0086	89 -35	2
AE1002256E0114	88 -52	2
AE1002256E0120	90 -11	2
AE1002256E0134	88 -55	2
AE1002256E0135	89 -32	2
	89 -38	2
AE1002256E0164	89 -49	2
AE1002256E0200	81 -17	2
AE1002256E0220	81 -13	1
AE1002256G0130	91 -27	1
AE1002256G0150	91 -28	1
AE1002256G0172	91 -	2
AE1002256G0233	87 -29	1
AE1002352E0460	30 -30	1
AE1002359E0146	30 -31	1
AE1002406E0145	39 - 3	1
AE1002406E0150	39 - 6	1
AE1002406G0224	91 - 9	2
AE1002415E0104	89 -46	2
AE1010119E0140	101 -44	1
AE1011105E0160	43 - 9	2
AE1204-2-231	98 - 2	2
AE1680E0087-180	30 -19	1
AE1826E0115-090	39 - 8A	1
AE300270-2A	130 -15	1
AE300270-3A	130 -	
AE320-2C	102 -29	REF
	130A-18	1
AE322-3B	103 -49	REF
	130A-10	2
AE340-28	129 -39	1
AE340-2B	129 -57	1
AE341-7C	129 -36	1
AE346-2A	130 -23	1
AE355-2A	130 -16	2
AE3663242F0140	101 -47	1
AE3663569F0250	101 -46A	1
AE409-5A	101 -56	AR
	135 -77	REF
AE6665018E0102	88 -60	2
AE6665018E0180	89 -26	2
AE7010000E0120	60 -26	1
	115 -63	REF
AE7010010E0135	83 -36	4
AE7010130M0220	60 -16	1
AE7010200N0240	61 -35	1
AE7013033G0280	53 -12	2

PART NUMBER	FIG AND INDEX NO	QTY /AC
AE705363-1	60 - 32	REF
	61 - 26	1
AER35866-502	101 - 10	1
ALPPH-T6-2	28 -	2
ALPPH-T8-2	28 -	4
AM1655	4 - 29	2
	38 - 21	REF
AM5186/AIC502	108 - 18	REF
	127 - 1	2
AMS3783	55 - 20	1
AN111-4	138 - 34	2
AN122735	136 - 7	1
AN123907	98 -	2
AN150254	142 - 7	2
AN150279	140 - 3	4
AN150280	142 - 10	2
AN173H11A	10 - 9	4
AN206DSP4	5 - 58	6
AN220-11	135B-	4
AN227-10-6	96 - 41A	2
AN227-10BM6	110 - 4A	2
AN227-6	134 - 26	4
AN227-7	134 - 26	4
AN227-8	134 -	4
AN227-9	134 -	4
AN229-2AS32-II	134 -	1
AN229-2AS43-II	134 -	1
AN23-22A	135A- 27	4
AN23-8A	135 - 20	8
AN2552-3A	102 - 37	REF
	118 - 1	1
AN276-6	74 - 21	6
AN3-10	23 -	
	135B- 10	4
AN3-10A	74 - 38	3
AN3-11A	129 - 12	3
AN3-13A	96 - 23	5
AN3-15	135B-	4
AN3-15A	135 - 52	24
AN3-16	97 - 22	4
AN3-16A	135 - 53	8
AN3-20A	136 - 9	7
AN3-23A	135A- 3	2
AN3-3	135 - 13	2
AN3-3A	16 -14H	27
AN3-4	61D- 13	12
AN3-4A	24 - 64B	15
AN3-5	74 - 32	2
AN3-5A	129 - 10	8
AN3-6	87 - 80	6
AN3-6A	43 - 1C	7
AN3-7A	40 - 2	18
AN3025-600	115 - 8D	1
AN3033-14	102 - 45	REF
	119 - 18	1
AN3033-15	119 - 19	1
AN310-3	23 -	
AN310-4	8 -	29
AN310-5	45 -	4
AN310-8	38 -11G	2
AN3106R10SL3S	118 -	1
AN3106R14S2SX	118 -	1
AN3106R14S5S	118 -	1
AN3106R18-1S	118 -	1
AN3111-2	106 -	4
AN3115-1	132 - 3	1
AN3116-2	114A-	1
AN3117-1	19 -	
	115 - 14	1
AN315-4R	138 -	2
AN315-8R	138 -	2
AN316-4R	18 -	20
AN316-5R	76 -	2
AN316-6R	28 -	3

PART NUMBER	FIG AND INDEX NO	QTY /AC
AN320-10	38 -	4
AN320-12	3 -	2
AN320-14	3 -	2
AN320-3	10 -	50
AN320-4	5 -	140
AN320-5	13 -	11
	45 -28	REF
	67 -	16
AN320-6	9 -	17
AN320-7	20 -	12
AN320-8	38 -	14
AN320-9	3 -	2
AN3249-1	105 -42	1
AN3249-2	105 -43	1
AN340-2	130 -	2
AN340-8	98 -	4
AN340DD516	20 -	24
AN3420-7	125 -	2
AN345-10	35 -	20
AN363C1032	18 -	4
AN364-720	61D-11	8
AN385-1-12	76 - 7	8
AN385-30-6	71 -	8
AN385-30-7	70 - 6A	8
AN385A3P12	65 -10	16
AN386-1-11A	65 -18	8
AN386-1-12A	66 -22	8
AN386-1-13	67 -14	4
AN386-1-13A	63 -29	8
AN386-1-14A	66 -32	2
AN386-1-15A	66 -20	8
AN386-2-14A	19 -23	8
AN386-2-15A	68 -18A	2
AN386-2-16	77A-30	4
AN386-2-16A	68 - 9	4
AN386-2-18A	65 - 7	8
AN3C10A	139 -67	2
AN3C3A	60 - 3	15
AN3CH20A	60 -19	4
AN3H4A	135 -36	4
AN4-10A	138 -28	8
AN4-11A	17 -13	6
AN4-12A	17 -14	8
AN4-13A	20 -31	4
AN4-14A	136 -21	4
AN4-15A	98 - 3	4
AN4-17	44 -18	2
AN4-21A	61D-48	2
AN4-24	67 -	
AN4-25A	22 -16	2
AN4-30A	23 -78	1
AN4-3A	103 -36	12
AN4-4A	70 -20	2
AN4-5	74 -35	2
AN4-5A	135C- 5	1
AN4-6A	57 -14	32
AN4-7A	135 -11	6
AN415-2	104 - 7	4
AN42B24A	65 -46	1
AN42B3A	31 -16	1
AN43B15	28 -15	1
AN46939	110 -70	1
AN486-4	28 -11	1
AN490HT8P	71 -14	2
AN5-26A	135 -60	2
AN500-4-8	121 - 3	3
AN500A10-20	25 -22	4
AN500A10-4	25 -17	2
AN500A4-8	121 - 2	1
AN500A6-8	107 -	2
AN500A8-5	77A-21	2
AN500A8-8	105 -30	1
AN501A10-10	26 -23	4
AN501A10-5	134A-13	4

PART NUMBER	FIG AND INDEX NO	QTY /AC
AN501A10-6	43 - 9B	6
AN501A10-7	38 - 6	8
	39 -27	REF
AN501A10-8	105 -34	1
AN501A6-4	132 - 8	4
AN501AD10-8	66 - 7	4
AN502-10-4	67 -24	2
AN502-10-8	123 -	8
AN502-416-10	61B- 3	2
AN507-1032R6	58 -21A	4
AN507-440R7	78 - 3	2
AN507-832R16	135 -45	4
AN507-832R7	109A- 4	21
AN507C1032R20	60 - 6A	2
AN509-10R10	106 -42C	36
AN515-4R40	107 -	2
AN515-4R8	123 -	28
AN515-5R12	139 -	1
AN515-6R	124 - 9C	2
AN515-8R9	114A-25A	4
AN515PB6R14	129 -	4
AN515PB6R8	126 -	2
AN515PB8R10	131 -	16
AN520-10R18	114 -59	4
AN520-10R9	30 -37	1
AN520-8R18	121 - 6A	2
AN520C10R10	55 -22	10
AN520C10R7	57 -13B	4
AN520C10R8	55 -10	6
AN520PB10R12	100 -11	10
AN525-10R8	100A- 5	1
AN530-10R20	96 -	1
AN530-10RF6	136 -	4
AN530-2-6	72 -	2
AN530-2R4	143 -	4
AN530-6R4	96 -41C	4
AN530-8R8	132 -	2
AN535-2-3	136 -	4
AN535-2-4	138 -	4
AN5534-2	130B- 7	1
AN565A4-3	72 -	1
AN565A428H9	19 -12	8
AN565A820H8	21 -52	2
AN565B6H2	139 -50	1
AN565C2H3	134A-14	2
AN565D1032H4	135 -	2
AN565D1032H9	143 -15	2
AN565E524H6	136 - 5	1
AN565F1032H4	5 - 8	8
AN565F428H3	38 -11C	4
AN565F428H4	5 - 9	6
AN5800-1	133 -17A	2
AN5816-2	7 -30	REF
	132 - 1	1
AN5839-2	130 -33	3
AN5DD14A	136 -12	6
AN6-15A	129 -15	4
AN6003T12A	101 -51	1
	101 -54	2
AN6011-18	101 -57	REF
AN6011-1B	130 -27	1
AN6015-2	101 - 5	2
AN6201-1	82 -25	1
AN6249-4	135A-10	4
AN6289-4D	97 -	1
AN6289-J4	30 -27	1
AN6289D4	39 -	39
AN6289D6	82 -	12
AN6289D8	86 -	5
AN6290-4	97 -	1
AN665-21L	135B-	2
AN665-21R	135B-	2
AN665-34L	135B-	2
AN665-34R	135B-	2

PART NUMBER	FIG AND INDEX NO	QTY /AC
AN735D16	61 - 14A	1
AN735D20	61 - 18C	2
AN735D24	95 - 7B	2
AN735D28	95 - 7C	2
AN735D32	95 - 20B	10
AN735D6	5 - 18	1
AN737RM46	55 - 15	2
AN737TW107	57 - 28A	8
	58 - 45	REF
AN737TW22	61 - 4A	24
AN737TW24	53 - 9	8
AN737TW26	53 - 13	1
	57 -	20
AN737TW30	98 - 31C	2
AN737TW34	61 - 9A	4
AN737TW34-38	96 - 58	4
AN737TW46	54 - 15	10
	58 - 41	REF
	58 - 46	REF
	59 - 3	18
AN737TW56-66	95 - 7A	26
AN737TW58	39 - 3C	15
AN737TW66	96 -	10
AN737TW74-91	95 - 20A	21
AN737TW98-114	98 - 27A	1
AN742-28	131 - 22	2
AN742-3	135 - 19	4
AN742-3C	101 - 9	2
AN742-4	31 - 8B	AR
AN742-8	4 - 57	2
AN742D10	100 - 10	6
AN742D4	81 - 20	15
AN742D5	121 - 12	2
AN742D6	5 - 19	4
AN742D8	100 - 6	12
AN743-12	21 -15P	2
	123 -	1
	128 - 41	1
AN743-13	21 - 6	12
	135A- 18	2
AN775-4D	94 - 8	3
AN776-4D	94 - 7	3
AN780-3	101 - 28	1
AN795-3	101 - 7	2
AN8-12A	138 - 26	2
AN8-17A	138 - 24	2
AN800-3	101 -	2
AN8008D13	129 - 13	4
AN8013D3	129 -	4
AN801D16	56 - 17	REF
	59 - 4	1
AN804-4D	131 - 46	1
AN804D4	94 - 11	4
AN804D6	131 - 10	1
AN805-3	101 -	2
AN814-4D	90 - 4	4
AN815-10D	61 - 27	2
AN815-12D	61A- 34	4
AN815-16	54 - 11	1
AN815-16D	61A- 20	3
AN815-20D	61 - 34	2
AN815-4	134A- 56	6
AN815-4C	30 - 24	1
AN815-4D	60 - 9A	9
AN815-6D	61A- 39	9
AN815-8	54 - 11A	2
AN816-3B	101 - 29	2
AN816-4D	131 - 36	4
AN816-5D	101 - 45	1
AN818-16	54 -	1
AN818-20D	59 -	1
AN818-4D	94 - 19A	1
AN818-6D	60 -	1
AN818-8	54 -	2

PART NUMBER	FIG AND INDEX NO	QTY /AC
AN824-16D	97 - 4	2
AN824-4	135A- 21	2
AN824-4D	131 - 5	2
AN824-5D	101 - 46	1
AN824-6D	61A- 45	3
AN832-20D	61 - 41	1
AN832-3	101 - 38	1
AN832-4D	94 - 19	1
AN832-4J	30 - 26	1
AN832-4S	30 - 15	1
AN832-5D	101 - 37	1
AN832-6D	61B- 9	2
AN833-10D	61 -	1
AN833-16D	97 - 9	1
AN833-4D	60 - 21	2
	97 - 25	1
	97 - 29	1
	97 - 32	1
AN833-4S	30 - 14	1
AN837-4D	131 - 6A	1
AN837-6D	131 - 14A	1
AN837-8	54 -	1
AN842-16D	96 - 53	2
AN893-12D	86 - 29	1
AN893-13D	87 - 84	2
AN893-2	39 - 5	1
AN894D4-3	25 - 14	2
	97 - 42	REF
AN901-4A	94 -	5
AN916-6D	131 - 45	2
AN917-1	101 - 27	1
AN919-16D	61A- 33	2
AN919-21D	97 - 6	2
AN919-6D	131 - 19	3
AN924-10D	61 -	1
AN924-16D	97 -	1
AN924-20D	61 -	1
AN924-3D	101 -	1
AN924-4	82 -	5
AN924-4D	39 -	70
AN924-4S	30 - 17	2
AN924-5D	101 -	1
AN924-6	82 -	26
AN924-6D	60 -	11
AN924-8	87 -	2
AN929-16	97 - 38	1
AN929A4	94 - 25	4
AN929A6	61B- 10	3
AN931A12-20	106 -16F	1
AN935-5L	109 -	2
AN935-816	138 -	2
AN935-8L	98 -	2
AN936-B8	98 -	1
AN936A2	130 -	2
AN936B10	78 -	3
AN937-6D	61A- 37	1
AN937D6	61B- 6	1
AN938-12D	61A- 31	2
AN938-4	135A- 11	2
AN938-4C	30 - 22	1
AN938D4	131 - 20	2
AN938D6	82 - 15	2
AN938J4	30 - 27A	1
AN939D4	81 - 8	1
AN948RE3H5	71 - 15	2
AN960-10	17 -	165
	121 -	AR
	128 - 29	19
AN960-10L	4 -	515
AN960-3	140 -	6
AN960-4	121 -	12
AN960-416	26 -	81
AN960-416L	30 -	35
AN960-4L	105 -	

PART NUMBER	FIG AND INDEX NO	QTY /AC
AN960-516	26 -	15
AN960-516L	27 -	3
AN960-6	102 -	396
AN960-616	26 -	21
AN960-616L	43 -	18
AN960-6L	18 -	1
	82A-	AR
	103 -	45
AN960-716	39 -	9
AN960-716L	47 -	2
AN960-8	23 -	
	105 -	
	105 -78	
AN960-8	128 -32	2
AN960-816	3 -	4
	61D-	AR
AN960-816L	38 -	6
	72 -	AR
AN960-8L	34 -	54
AN960-916L	91 -	2
AN960C10	23 -	46
AN960C10L	23 -	87
AN960C416	34 -	18
AN960C416L	34 -	10
	55 - 6	AR
	90 -	4
AN960C516	34 -	8
AN960C516L	105 -	3
AN960C6	110 -	2
AN960C616	29 -28	1
	90 -	2
AN960C6L	110 -	6
AN960C8	54 -	6
AN960C8L	23 -	8
AN960C916L	43 -9N	2
AN960D10	20 -	114
AN960D10L	12 -	263
AN960D2	110 -	6
AN960D4	109A-	10
AN960D4016L	23 -	1
AN960D416	11 -	351
AN960D416L	24 -	12
AN960D4L	102 -	134
AN960D516	19 -	89
AN960D6	106 -	13
AN960D616	11 -	16
AN960D616L	19 -	3
AN960D6L	102 -	296
AN960D716	39 -	1
AN960D8	20 -	43
AN960D816L	126 -	AR
AN960D8L	4 -	553
AN960JD10L	14 -56	15
AN960JD4L	14 -53	3
AN960JD6L	18 -	2
AN960KD4	103 -	4
AN960KD416	103 -	4
AN960KD616	103 -	4
AN960PD10	4 -	166
	14 -	AR
	14 -	AR
	16 -	760
AN960PD1016	67 -	2
AN960PD10L	4 -	845
	135 -	AR
	135A-	AR
	135A-	58
AN960PD1216	87 -	2
AN960PD2	133 -	6
AN960PD2116	97 -	1
AN960PD4	72 -	10
AN960PD416	4 -	176
	46 -	AR
	60 -	193

PART NUMBER	FIG AND INDEX NO	QTY /AC
AN960PD416L	4 -	AR
	8 -	AR
	9 -	20
	46 -	AR
	60 -	42
	66 -	AR
	68 -	29
AN960PD4L	73 -	11
AN960PD516	4 -	
AN960PD516L	4 -	
AN960PD6	8 -	20
AN960PD616	4 -	11
	43 -22A	AR
	63 -	13
AN960PD616L	74 -	2
AN960PD6L	42 -	44
AN960PD716	20 -	83
AN960PD716L	47 -	AR
AN960PD8	18 -	107
AN960PD816	63 -	18
AN960PD816L	135 -	4
AN960PD8L	9 -	13
	29 -	AR
	31 -	453
AN960PD916	3 -	36
AN960XD416	40 -	1
AN970-3	135 -	4
AN970-4	27 -	1
AN970-5	89 -14A	3
AN975-3	19 -	62
APX77-90A	123 -	1
AR3-4	71 -16	6
AS4580/2	94 -16	3
AS5071/ARN	123 -30	1
AS5084/ARN508	123 -33	2
ASH564B-6	103 -54	2
AT256A/ARC	123 -28	1
	125 -42	REF
AT3020-1	101 - 4	2
AT640A/ARN	123 -31	1
AT741A	123 -29	1
	123 -39	1
	125 -43	REF
	125 -44	REF
AV16B1692D	56 -23	REF
	60 -17	1
AV16E1274	56 -38	REF
	61B- 2	1
AVL45-040	123 -	2
B3	14 -50	1
B4	63 -17A	1
	67 -18	2
	76 -26	1
B51547F012	110 -68	1
B52595F025	110 -69	1
B538DD	69 - 1A	4
	69 - 2A	8
	69 - 3A	4
	69 - 9A	4
	73 - 7	2
	73 -10	2
	74 - 6	2
	74 -10	2
B539DD	65 -11	16
B540DD	63 -32B	4
	76 - 5	4
	76 -14	2
	76 -16	2
	76 -25	2
	76 -34	2
B542DD	63 -27B	8
	66 -10	2
	66 -15	2
	66 -34	1

PART NUMBER	FIG AND INDEX NO	QTY /AC
	66 - 36	1
	68 - 15A	4
	71 - 6	1
	71 - 8	1
B543DD	9 - 13	2
B64-CB-10	123 - 15	4
B6602AC	130 -	2
B6610C	130 -	2
	130 -	2
	130 -	2
B6611C	130 -	1
	130 -	1
	130 -	2
BAC20B43	112 - 40	2
BLC3TA09S	20 - 51A	2
BR4	64 -	
	64 -	
	66 -	
	69 -	
BR4H	64 -	30
BR8-1	106 - 42B	2
BS10370K1105	134 -	6
BS10412K1105	134 -	6
BS16506K1105	23 - 52	8
BTI600-200A	129 - 18	1
BUR610-2	52 -	1
C-5367(V)2/ARC-164(	126 - 52	1
V)		
C100994-1	89 - 6	2
C100U2	103 - 44	1
C101040	26 - 24	2
C101073	130 -	1
C5063/ARC552	126 - 1	1
C5067/ARC522	111 - 26	REF
C5067/ARC552	126 - 22	1
C5069/ARC552	126 - 43	1
C5140/AIC502	111 - 25	REF
	126 - 21	1
C5287/ARN504V	111 - 13	REF
	126 - 20	1
C6280P/APX	126 - 23	1
C6280P/APX77	111 - 27	REF
C63B51600-1	136 - 2	1
C63B51600-2	136 - 6	1
C63B51601-1	136 - 10	1
C63B51602-1	136 - 3	1
C63B51608-1	143 - 5	1
C63B51609-1	143 - 11	1
C63B51611-1	143 - 4	1
C63B51612-1	143 - 7	1
C63C51599-1	136 -	1
C63C51607-1	143 -	1
C63C51610-1	143 - 16	2
C63D51598-1	136 - 8	1
C63D51605-1	143 -	1
C63D51606-1	143 - 1	1
C63F51596-1	136 -	1
C63F51597-1	136 - 1	1
C63F51604-1	143 -	1
C63F51613-1	142 - 16	1
C64F46819-2	144 -	1
C65D00217-1	142 - 31	2
C66A00218	101 -	1
C66A00219-1	101 - 11A	1
C66A00235-1	101 - 11D	1
C66A00236-1	101 -11E	1
C66B00237-1	101 - 11C	1
C66B00238-1	101 -	1
C66C00232-1	101 - 11B	1
C66D00743	142 -	1
C66D00743-11	142 - 36	1
C66D00743-12	142 - 33	1
C66D00743-13	142 - 32	1
C67B00215	142 - 37	1

PART NUMBER	FIG AND INDEX NO	QTY /AC
C67B00216	142 -38	1
C67B00217	142 -	1
	142 -	
C69B47379-1	30 - 8	2
C70A47179-1	65 -	4
C71B00267-1	129 -55	1
C71B47355-1	129 -51	1
C71C00268-1	129 -	1
C71C00269-1	129 -	1
C71C47114-1	129 -50	1
C720-072-2000	144 - 7	1
	144 -14B	1
C72B47110-1	128 -	1
	128 -	1
C72B47274-1	96 -55	1
C72B47274-2	96 -	1
C72C47115-1	109A-13	REF
	129 -	
C72C47116-1	128 -23	1
C72C47117-1	128 -24	REF
	129 -	1
C72D47118-1	130 -	1
C72D47119-1	126 -	REF
	129 - 1	REF
	130 -	1
C74B47071-1	123 -12	1
C74C00179	18 -34D	2
C74C47075-1	123 - 9	1
C74D47080-1	128 -18	1
C74F47081-1	123 -	REF
	125 -	1
C75502	67 -28	1
C75506	102 -33	REF
	115 - 3	1
C75507	7 -29	REF
	102 -44	REF
	119 -15	1
C75509	74 -43A	REF
	102 -46	REF
	119 -17	1
	130B-30	REF
C90004-10	130 -13	2
C90015CX10	130 -12	2
C9614-1	121 -20	1
CA3100KE20-27P	118 -	1
	121 -	1
CA3100KE24-12P	118 -	1
CA3106KE20-27P	132 -	
CA3106KE20-27S	118 -	1
CA3106R10SL4S	114 -	
CA3193JJJ0376	60 -31	REF
	61 -11	1
CAE9513001-1	130 -71	1
CAE9513002-1	130 -72	1
CAE9513003-1	130 -73	1
CAP1826C	34 - 4	1
CCFM200-3	12 - 4C	12
CCFM200-4	12 - 4C	14
CE9218-5011	125 -	1
CF-T-75	17 -	4
CFT75-36-009	106 -	2
CL44BJ250TP1	125 - 2A	2
CM8-627	109 -	2
	111 -	1
	112 -	6
	112 -	6
	112 -	6
	112 -	6
COMM	23 -	1
CP10A1KB104K1	115 -65	1
CP53B1EF205K1	107 -44	2
CU5038/ARC552	124 -23	1
	125 -41	REF
CV5116/ARN508	123 -32	1

PART NUMBER	FIG AND INDEX NO	QTY /AC
CW123/U	124 - 4	3
CW123A/U	124 -	
	124 -	
D1068-064-1	134 -	42
DAA628-40	33 - 14	2
DAA629-46	33 - 10	2
DB51221-1	128 - 76	1
DK100	122 - 2	1
DPA32-33S	125 - 10	2
DPD33(11612)	125 -	2
DPJ59C10-34SA	125 - 13	1
DPX2MA4WIS40W1S	123 -	1
DT2RA7	27 - 34	1
	134A- 9	2
E8058	78 -	1
E9163M2	25 -	1
EA323-2H	130 - 25	1
ER776-4	89 - 7	2
ER804-08-06-06	87 - 7	1
ER804-080606	86 - 22	1
ER833D0806	87 - 76	2
ER837-0608	86 - 18	1
F34-14	18 - 6	2
	40 - 10	1
	40 - 24	1
F5040-16	92 - 12	REF
F61A1718-9	61 - 10B	1
	61 - 25B	1
F8595409	134A- 45	2
	135A- 29	REF
F893731	25 - 7	1
	30 - 43	REF
FCA25751	59 - 1B	4
FCB20104	19 - 29A	25
	19 -	6
	20 - 13B	4
	20 -	4
	20 -	8
	20 -	12
	20 -	12
	21 -15H	10
	21 -	4
FCB20441	19 - 29	25
	19 - 30	6
	20 - 13A	4
	20 - 16C	4
	20 - 19A	8
	20 - 36A	12
	20 - 41A	12
	21 -15G	10
	21 -15R	4
FCB20459	19 - 29B	25
	19 -	6
	20 - 13C	4
	20 -	4
	20 -	8
	20 -	12
	20 -	12
	21 -15J	10
	21 -	4
FCB25714	57 - 5C	1
	58 - 1G	2
FCB25715	57 - 5G	4
	58 - 1C	16
	59 - 1C	8
FCB25716	57 - 5F	2
	58 - 1F	4
	59 - 1D	2
FCB25717	57 - 5E	1
	58 - 1D	2
FCB25722	58 - 1B	4
FCB25752	59 - 1A	4
FCB25753	57 - 5B	2
	58 - 1A	4

PART NUMBER	FIG AND INDEX NO	QTY /AC
FCC20458	19 -	25
	19 -	6
	20 -	4
	20 -	4
	20 -	8
	20 -	12
	20 -	12
	21 -	10
	21 -	4
	57 - 40	REF
	58 - 47	REF
	59 - 25	REF
FCC60313	57 - 5D	4
FCC65217	58 - 1E	2
FCD60815	56 - 1	REF
	57 - 5A	1
FCD60816	56 - 8	REF
	58 - 1	1
FCD60817	58 -	1
FCD60818	56 - 15	REF
	59 - 1	1
FCD60819	59 -	1
FF1213-1	135B- 2	4
FF164426-2	12 - 4C	12
FF600-5	40 - 6	2
	40 - 8	2
FFW92	129 -	4
FG220A217	130B- 9	1
FG250A45	130B- 16	1
FL203-1	56 - 3	REF
FLLA	103 - 39	2
FLLE	105 - 3	2
FN1014-1032	105 -	4
FNA1836	126 - 30	1
FSH	103 - 37	4
FX90	96 -	1
G51H-A	117 -26R	2
G51H-C	119 - 9	2
G56679	62 - 4	REF
	67 - 21	2
G8400A8-24	102 - 28	REF
	115 - 1	2
GB300NA111	103 - 41	1
GSB071	120 -	3
GSC128	120 -	3
H14-3	21 -	2
H5000-081-125	16 - 15B	1
H5000-2-040-081	34 - 33	2
H5000-2-051-081	32 - 13	2
	32 - 34	2
H5000-2-064-064	23 - 45	2
H5000-2-072-072	32 - 6	2
H5000-2-072-102	22 - 1	1
	22 - 26	1
H5000-2-072-132	22 -	1
H5000-2-081-164	24 - 5A	2
H5000-2-091-091	23 - 40	1
H5000-2-156-125	23 - 60	1
HKP	0 - 20	8
HL218-6-23	21 -	2
HMR4M	41 - 8	2
HP457100-1900	87 - 5B	1
HR2002-1	85 - 16	1
HRBLL3E	78 - 18A	2
HRBML3EFN	70 - 25	2
HRBML3FN	78 - 14	1
HS109-012	85 - 16D	1
HS109-015	85 -16E	1
HS109-016	85 - 16A	2
HSBG3	70 -	4
HT1-10	123 - 8	4
	123 -	4
ID-1961B/ARC-164(V)	123 - 2	1
ID5040A/ARN	126 - 4	2

PART NUMBER	FIG AND INDEX NO	QTY /AC
	128 -35	REF
IN1614	106 -16B	1
INST8-7	123 -42	REF
	125 -38	REF
	130A - 3	1
JAN-1N3613	111 -	1
	111 -	1
JAN-P-127	57 -	AR
	58 -	AR
JAN1N3611	110 -77	1
JAN1N3957	105 -	8
	110 -81	2
	126 -	2
JAN1N540	103 -	8
	130 -	2
JANIN3957	103 -	1
JG602A1	130 -26	1
JJ034	113 -31	1
JS5	78 -11	1
K03-21-30SN-C13F	128 -	3
K06-21-5/8	128 -	3
K41A-10006-12	47 -11	2
K41A-30019-1	19 -	NP
K41A-30019-38	19 -35	2
	19 -	2
K41A-30019-40	19 39	1
K41A-30019-41	19 -	1
K41A-30019-42	19 -40	2
K41A-30019 C C	19 -	NP
K41A-35008-16	22 -39	1
K41A-35008-17	22 -	1
K41A-35008-18	22 -37	1
K41A-35008-20	22 -38	1
K41A-35008-21	22 -	1
K41A-35008-40	22 -40	2
K41A-35008-50	95 - 4	1
K41A-35008-51	95 -	1
K41A-35008-802	22 -	NP
K41A-40533-26	113 -28	1
K41A-40550-10	98 -31B	1
K41A-40550-2	98 -31A	1
K41A-58028-70	107 -37	1
K41A-58028-72	107 -38	1
K41A-58029	61A -	REF
	61B -	REF
	109 -	REF
	111 -	NP
	115 -	REF
K41A-58029-8	109 -	1
K41A-58037-12	105 -55	2
K41A-58037-18	105 -50	1
K41A-58037-2	103 -	REF
	105 -	NP
	110 -	REF
K41A-58037-20	105 -53	1
K41A-58037-22	105 -	1
K41A-58037-24	105 -54	1
K41A-58037-26	103 -50	1
K41A-58037-4	105 -	1
K41A-58040-4	103 -56	4
K41A-58041-2	110 -	REF
	124 -	REF
	126 -	NP
K41A-58042-10	123 -26	1
K41A-58042-12	123 -	2
K41A-58042-2	123 -	NP
K41A-58042-4	123 -32	1
K41A-58042-8	123 -	1
K41A-58043-16	105 -61	1
K41A-58043-20	123 -	1
K41A-58043-26	123 -	1
K41A-58043-4	112 -37	1
K41A-58043-6	112 -36	1
K41A-58043-8	126 -	2

PART NUMBER	FIG AND INDEX NO	QTY /AC
K41A-58044-2	103 -	NP
	105 -	
	112 -	NP
	123 -	REF
K41A-58045-20	123 - 19	1
K41A-58045-30	123 -	NP
K41A-58045-32	123 - 12	2
K41A-58045-34	123 - 14	2
K41A-58045-8	123 - 5	2
K41A-59005-6	105 - 40	1
K41A-59008-5	105 - 38	1
K41A-59009-12	102 -	1
K41A-59013-18	103 -	1
K41A-59013-19	103 -	1
K41A-59023-38	115 - 40A	1
K41A-59023-54	109 -15N	1
K41A-60016	61C-	NP
K41A-60017	19 -	NP
K41A-60018	57 -	REF
	58 -	REF
	61A-	NP
	61B-	REF
	61C-	REF
	97 -	REF
K41A-60018-110	61C-	NP
K41A-60018-112	61C-	NP
K41A-60018-118	61C- 3	2
K41A-60018-122	61C- 11	2
K41A-60018-125	61A- 3	1
K41A-60018-127	58 - 48	1
K41A-60018-16	61B-	1
	97 - 44	1
	98 - 38	REF
K41A-60018-18	61A-	1
K41A-60018-2	61A- 50	REF
	61B-	1
K41A-60018-4	61B- 1	1
K41A-92000-14	22 -	1
K41A-92000-16	22 -	1
K41A-92000-6	22 - 28	1
K41A-92000-8	22 - 27	1
K41A-95000	96 -	NP
K59-78	123 -	2
KC106-500	72 -17E	1
KC59-21	125 - 17B	3
KC59-224	123 -	2
KC59-86	123 -	1
KE4-10	49 - 9	2
	49 - 15	1
KEL4-10	49 - 12	2
	49 - 16	1
KH59-08	125 - 22B	1
KH59-11	123 - 40	1
	125 -	1
KJ126	72 -	1
KN19-30	123 - 36	1
KN59-18	125 - 16A	8
KP23BS	26 - 1A	3
	26 - 3A	2
KS89-05	125 - 25B	4
KSB8SXD1	13 - 2	2
KV144	72 - 17D	1
KWB4N	74 - 26	4
KWB4N3	74 -	
KY246	72 - 17	1
KY925	62 - 16	REF
	72 -	1
	73 - 12	1
KZ147	72 -17F	1
L622	136 -	2
LAC24-426	82 -	AR
LDH482	142 - 17	1
LDH682	142 - 19	1
LHA4	26 - 13	1

PART NUMBER	FIG AND INDEX NO	QTY /AC
	27 -12	1
	27 -22	1
LHA5	27 - 4	1
	27 -13	1
LHA8	4 -35B	2
LHEB220-164	3 -	2
LHSSR-8	39 -22	2
LHSSR18A	37 -10	REF
	38 - 4	2
LP62V040H16	135B-38	4
LS1010-180	130 -75	1
LS607-8	128 -30	1
	128 -59	2
LSS-4	19 -	2
	48 -	
	48 -	
	48 -	
	129 -	
	129 -22A	
	129 -	
	129 -	
	129 -	
	130 -71	
	134A-29	
	134A-30	
	134A-	
	134A-31	
	134A-	
	134A-	
	134A-	
	134A-32	
	134A-	
	134A-	
	134A-33	
	134A-	
	134A-	
	134A-34	
	134A-	
M2025103	103 -	4
M23053/5-104-4	17 -	6
M23329/3-01-03	123 -23	2
M23329/3-08	123 -22	2
M34-14	40 -11	1
M39006-09-8615	110 -	1
M39012/01-0005	128 -77	2
M39012-05-0001	125 -24A	1
M55339/03-00027	128 -77	2
M5757/1-021	123 -13	1
M5757-10-141	109A-49	2
M81714/12-20B-1	103 -	3
M83248/2-123	60 -	1
M83413/8-2AB6	115 -66	1
M83413/8-2BB6	17 -31	5
M83519/1-2	123 -	15
M83726/3-016	107 -64	1
M85049/48-3-3N	128 -76	1
M85049/52-12N	128 -74	1
M85049/52-16N	128 -73	2
M85049/52-22N	128 -73	1
M85049/53-20W	126 -	1
M9700	34 -64	1
MCD7711	27 -33	1
MDL-1	0 -	8
MIL-C-5040	57 -33	AR
	57 -34	AR
	57 -35	AR
MIL-T-43435TY1FINBSZ3	120 -19C	AR
MIL-T-5041	43 -25	2
MIL-T-5583A	62 -25	REF
	74 -43	REF
	119 -27	REF
	130B-25	1
MIL-W-83420	52 -11	AR

PART NUMBER	FIG AND INDEX NO	QTY /AC
MN97HA4/ARN	126 - 3	2
	128 - 34	REF
MS122118	130 - 19B	2
MS122198	130 -	2
MS14101-10	44 - 2A	4
MS14104-4	17 - 5	4
MS15001-1	39 - 26	4
MS15795-203	110 -	2
MS15795-804	115 - 48B	2
MS16624-1037	29 - 10	6
MS16624-1087	29 - 8	2
MS16624-68	135 - 64	32
MS16625-1143	4 -	2
MS16625-1300	67 - 1D	2
MS16625-212	66 - 36B	1
MS171467	43 - 9J	6
MS171606	29 - 15A	1
MS17245-5	109 - 27	2
MS17821-1-8	114 - 76	4
MS17821-1-9	130B- 9A	4
MS17821-2-9	57 - 15D	1
	58 - 16D	2
MS18029-11S10	105 - 38A	1
MS18029-11S20	110 - 75	1
MS18029-1L4	107 - 43	1
MS18029-1L5	107 -	1
MS18029-1S10	108 - 13	6
MS18029-1S12	109 - 17A	8
	128 - 13	1
MS18029-1S15	127 - 7	3
MS18029-1S16	130 - 7	1
MS18029-1S19	110 - 46	2
MS18029-1S2	103 --43	9
MS18029-1S3	124 - 20B	1
MS18029-1S4	111 -	5
MS18029-1S5	107 -	6
MS18029-1S6	103 --19	5
MS18029-1S7	109A- 20	3
MS18029-1S8	110 - 26	7
MS18029-1S9	115 - 40	1
MS18029-1SG	119 - 5	2
MS18029-21	105 - 38B	4
MS18029-23	107 - 61	3
MS18029-2L3	107 - 48	1
MS18235-3RT	129 -	1
MS20001P3-7200	16 - 15C	1
MS20002-10	38 -	2
MS20002-4	61D-	2
MS20002-5	45 -	4
MS20002C-5	61D-	4
MS20002C10	38 -	2
MS20002C4	21 -	6
MS20002C5	61D-	4
MS20002C8	3 -	10
MS20004-10	21 - 19	4
MS20005-18	61D- 29	4
MS20005-24	61D-	2
MS20005-26	61D-	2
MS20005-54	61D- 5	2
MS20005H7	38 - 5	8
MS20006-12	28 - 8	1
MS20008-18	3 - 9	2
MS20073-03-10	67 - 15B	2
MS20073-04-03	57 - 30	76
MS20073-04-04	57 - 7	80
	58 - 44	REF
	59 - 2A	30
MS20073-04-05	57 - 9	120
MS20073-04-17	58 - 34	12
MS20201KP5A	65 - 5	4
MS20206DSP5	5 - 43	2
MS20207DPP4	74 - 23	1
MS20219-2	31 - 3A	1
MS20219A1	65 - 34	2

PART NUMBER	FIG AND INDEX NO	QTY /AC
MS20230A10	23 - 53	4
MS20230B2	135C-	2
MS20230B4	142 - 34	1
MS20242AB5	12 - 4A	14
MS20253P2-150L	130 - 74	1
MS20253P2-155	34 - 53A	4
MS20253P2-225	34 - 34A	1
MS20253P2-300	23 - 46	1
MS20253P2-500	34 - 38B	1
MS20364-624	135 -	8
MS20392-1C11	104 - 3	4
MS20392-1C13	135B- 21	14
MS20392-1C15	135B- 43	4
MS20392-1C19	77A- 41	4
MS20392-2C11	65 - 56	1
MS20392-2C13	65 - 57	13
MS20392-2C17	37 - 27	REF
	38 - 19	2
	43 - 27	REF
	47 - 38	REF
	135B- 15	8
MS20392-2C19	28 - 13	4
MS20392-2C21	22 - 18	2
MS20392-2C25	18 - 26	4
MS20392-2C37	47 - 17	2
MS20392-2C55	72 - 16	1
MS20392-2C7	31 - 19	11
MS20392-2C9	65 -	5
MS20392-2C93	23 - 42	1
MS20392-2P21	52 - 9	4
MS20392-3C11	66 - 26	2
MS20392-3C15	135B- 46	8
MS20392-3C21	22 - 13A	4
MS20392-3C25	17 - 2	4
MS20392-3C29	18 - 8	2
MS20392-3C41	45 - 9	3
MS20392-3C45	66 - 28	1
MS20392-3C47	44 - 12	4
MS20392-5C39	135 - 37	4
MS20392-7C39	138 - 23	14
MS20401AD5	12 - 4A	20
MS20426AB4	12 - 4A	28
	12 - 4C	16
MS20426DD6-9	4 -	20
MS2044N3	123 -	2
MS20470AD6-10	122 -	4
MS20500-1032	43 -	59
MS20500-428	52 -	46
MS20500-524	43 -	12
MS20604ML4W3	82 - 28A	1
MS20819-16	40 -	2
MS20819-20	59 -	1
MS20819-6	60 -	1
MS20819-8	54 - 7	2
MS20826-4D	131 - 34	6
MS20995F41	65 -	AR
MS21042-04	14 - 53	11
MS21042-08	128 - 32	2
MS21042-3	14 - 56	17
MS21042-6	134A-	4
MS21042L04	78 -	
	105 -139	
MS21042L06	8 -	651
	144 -	2
MS21042L08	4 -	102
	29 -	AR
	34 -	
	105 -	
	105 -620	
MS21042L3	4 -	948
	103 -	4
	106 -	131
	121 -	AR
	121 -	250

PART NUMBER	FIG AND INDEX NO	QTY /AC
MS21042L4	4 -	268
MS21042L5	16 -	48
MS21042L6	4 -	42
MS21042L8	5 -	88
MS21042N06	130A-	5
MS21043-04	124 -	1
MS21043-06	110 -	4
MS21043-08	23 -	5
MS21043-3	22 -	285
MS21043-4	34 -	10
MS21044D08	5 -	18
MS21044N04	105 -	10
MS21044N06	123 -	2
MS21044N3	123 -	30
MS21045-8	3 -	2
MS21059L3	128 - 7	4
MS21060L4K	100A-	2
MS2106R16S1S	114 -	
MS21076-08	110 -61	2
MS21083N03	108 -	2
MS21083N04	102 -	10
MS21083N06	102 -	14
MS21083N08	65 -	10
MS21083N3	63 -	59
MS21083N4	65 -	27
MS21103D6	123 -	1
MS21104D5	30 -33	1
MS21104D8	30 -41	1
MS21151-7C	78 -18	2
MS21152-1	40 -16	1
MS21152-7	70 - 6	2
MS21209C0815	135B-	6
MS21209F1-20	9 -	4
	52 - 5	8
MS21209F4-15	9 -	2
	57 -	28
MS21209F4-20	9 -	36
MS21209F415	5 -	8
MS21209F5-15	4 -42A	18
MS21209F6-15	63 - 5B	1
MS21209F8-15	4 -18A	4
MS21209F8-20	20 -40A	2
MS21245-08	22 -	4
MS21250-08018	61D-49	2
MS21266-2	128 -60	AR
MS21266-3	123 -	AR
MS21266-3N	132 -	AR
MS21900D4	132 -19	2
MS21902-4	39 - 8B	10
MS21902-6	87 -91	2
MS21902-8	86 -23	1
MS21902D4	39 - 3A	18
MS21902D6	82 -18	10
MS21902J8	87 - 6	1
MS21904D6	58 -49	1
MS21905-6	91 -15	2
MS21905-8	87 - 4	1
MS21905D4	83 -33	4
MS21905D6	87 -38	2
MS21906D4	83 -28	1
MS21906D6	87 -22	1
MS21907-4	43 - 8	6
MS21907-6	87 -42	2
MS21907D4	83 - 2	8
MS21907D6	87 -31	1
MS21908-4	81 -12	18
MS21908-6	87 -40	12
MS21908D4	81 - 2	28
MS21908D6	86 -17	6
MS21909-4	39 - 4	5
MS21909D4	82 - 8	1
MS21909D6	82 - 4	4
MS21910D8	86 -21	1
MS21911-4	85 -20	1

PART NUMBER	FIG AND INDEX NO	QTY /AC
MS21912-4	82 - 2	5
MS21912D6	86 - 6	8
	88 - 48	REF
MS21912WH9	118 - 29A	6
MS21914-4	30 - 40	3
MS21915-8-6	91 - 29	1
MS21916-6-4	39 - 5B	1
MS21916-8-6	87 - 35	1
MS21916D6-4	82 - 17	21
MS21916D8-6	82 - 26	1
	85 - 10	1
	86 - 33	1
MS21919-3	123 -	AR
MS21919WCH13	123 - 27B	1
MS21919WCH2	121 - 4A	1
MS21919WCH3	121 - 7	1
MS21919WCH4	121 - 5	3
MS21919WCH5	121 - 4	18
MS21919WCH6	123 - 37	1
MS21919WCH7	123 -	11
MS21919WCJ32	95 - 23	3
	106A- 58	REF
MS21919WDG10	106 - 7G	18
MS21919WDG11	30 - 25A	36
MS21919WDG12	61A-	35
MS21919WDG13	106 -22E	14
MS21919WDG14	114A- 20	7
MS21919WDG15	114 - 21	2
MS21919WDG16	61A- 22	22
MS21919WDG17	114 - 54	1
MS21919WDG18	0 - 17	1
MS21919WDG2	53 - 4	
	113 -	19
MS21919WDG20	101 -	1
MS21919WDG24	120 - 28	2
MS21919WDG26	96 - 51	5
MS21919WDG28	96 - 20	3
MS21919WDG3	101 - 4A	100
MS21919WDG31	30 - 35	1
MS21919WDG4	38 -11E	153
	128 - 78	REF
	132 - 18	2
MS21919WDG5	53 - 10	70
MS21919WDG6	53 - 3	39
MS21919WDG7	106 - 6B	72
	128 - 79	REF
	128 - 80	REF
	130A- 22A	1
MS21919WDG8	30 - 36	68
MS21919WDG9	53 - 14	32
MS21919WG13	120 - 38	1
MS21919WG24	96 - 52	1
MS21919WG4	131 - 23	6
MS21919WG6	131 - 25	4
MS21919WH10	125 -12J	1
MS21919WH11	118 - 29B	4
MS21919WH12	118 - 30	1
MS21919WH16	87 - 8	6
MS21919WH3	110 - 64	20
MS21919WH34	95 - 9	1
MS21919WH4	85 - 25	11
MS21919WH5	118 -28F	12
MS21919WH6	87 - 21	20
MS21919WH7	118 -28H	4
MS21919WH8	87 - 5A	3
MS21921-6D	58 -	1
MS21922-6	58 -	1
MS21924-4	82 - 36	11
MS21924-6	87 - 33	3
MS21924D4	81 - 4	8
MS21924D6	82 - 34	4
MS21926-4	39 - 7	3
MS21926-4D	83 - 10	4
MS21926-6D	91 - 2	2

PART NUMBER	FIG AND INDEX NO	QTY /AC
MS21926D6	87 -86	2
MS22012-2	101 - 2	2
MS22055B24	101 -	1
MS22055H24	101 -51A	2
MS22058-2	101 -	1
MS22073-1	0 -25D	1
	112 -43	1
MS23006-3	106 -	1
MS24149D1	100A- 2	1
	102 -41	REF
	102 -51	REF
	109A-24	1
	115 -31	1
	118 - 3	1
	119 -10	1
	121 -45	1
MS24166D1	107 -32	2
	110 -39	2
	110 -42	1
MS24171D1	103 -35	2
	103 -59	REF
	105 - 8	3
MS24179D1	105 - 6	1
MS24185D1	102 -31	REF
	105 -10	1
	106 -45	REF
	115 - 8B	1
MS24187D1	105 -36	1
MS24266R12B12N	125 -	1
MS24266R22B55SN	128 -	1
MS24308/2-3	128 -76	1
MS24331-1	27 -40	REF
MS24350-1	92 -17	REF
MS24392D5	101 -34	1
MS24456-1	73 - 3	2
	102 -52	REF
	121 -19	1
MS24461-6	69 - 7A	4
MS24497-5	104 - 1	2
MS24523-22	111 -17	2
MS24523-23	126 - 5	1
MS24523-23G	111 -19	1
MS24523-30	107 -26	1
MS24524-26	107 -25	1
MS24568D1	109A-30	3
	130B- 5	1
MS24586-96	65 -52	1
MS24658-230	129 -28	1
MS24660-23D	111 - 3	1
MS24665-130	18 -	52
MS24665-132	10 -	162
MS24665-134	8 -	71
MS24665-136	38 -	69
MS24665-138	44 -	4
MS24665-140	135 -	4
MS24665-149	72 -	3
MS24665-150	135 -	2
MS24665-151	44 -	18
MS24665-153	5 -	10
MS24665-155	45 -	6
MS24665-283	39 -	9
MS24665-285	9 -	29
MS24665-287	38 -	7
MS24665-289	33 -	4
MS24665-300	44 -	4
MS24665-304	89 -	4
MS24665-306	20 -	4
MS24665-357	33 -	6
MS24665-359	3 -	4
MS24665-360	3 -	2
MS24665-368	65 -	4
MS24665-7	31 -	1
MS2466R16T24S	128 -	1
MS24692-102	70 -30A	8

PART NUMBER	FIG AND INDEX NO	QTY /AC
MS24692-105	70 - 23A	10
MS24692-108	69 - 13A	6
MS24692-111	64 -	132
MS24692-132	69 - 29A	12
MS24692-135	64 -	54
MS24692-138	69 - 20A	24
MS24692-153	40 -	2
MS24692-173P	61D- 44	4
MS24692-187	63 -	2
MS24693-2	126 -	3
MS24693-24	126 -	8
MS24693-25	111 -	12
MS24693-269	43 - 12A	2
MS24693-270	14 - 39	10
MS24693-271	14 - 34	12
MS24693-272	11 - 10	53
MS24693-273	12 - 7	32
MS24693-274	12 - 6	24
MS24693-278	119 - 17A	1
MS24693-28	111 -	29
MS24693-29	61D- 18	4
MS24693-296	123 - 6	4
MS24693-3	130 - 49	2
MS24693-30	109A- 35	1
MS24693-32	126 -	4
MS24693-33	126 -	2
MS24693-4	113 - 10	2
MS24693-48	130 -	2
MS24693-49	109 - 4	16
MS24693-50	119 - 16	8
MS24693-51	18 - 33	92
MS24693-52	108 - 8A	9
MS24693-55	135 - 6	2
MS24693-6	126 -	2
MS24693-BB31	130 -	2
MS24693-BB32	130 -	6
MS24693-BB33	130 -	12
MS24693-C26B	113 - 18	5
MS24693-S2	111 -	3
MS24693-S30	119 -	2
MS24693BB34	130 -	4
MS24693C271	52 -12F	15
MS24693C36	128 -	4
MS24693C49	133 - 3B	18
MS24693CB47	13 - 25	4
MS24693S251	123 - 7	4
MS24693S26	42 - 5	18
MS24693S270	130 -	2
MS24693S28	72 - 24A	2
MS24693S4	111 -	2
MS24693S49	72 - 20B	2
MS24694-3	47 - 10B	2
MS24694-47	132 - 11	4
MS24694-49	43 - 9P	4
MS24694-51	13 - 15	4
MS24694-53	4 - 17	14
MS24694-54	21 - 29C	34
MS24694-59	129 - 11	2
MS24694-6	135B-	6
MS24694-62	135 - 4	2
MS24694-69	9 - 45	34
MS24694-79	9 -	4
MS24694-C55	22 -	2
MS24694-C57	22 -	132
MS24694S194	103 - 27	4
MS24694S50	9 - 53	44
MS24694S53	123 -	12
MS25010B11	129 - 33	4
MS25010B12A	126 - 28	7
MS25010B16A	111 - 21	1
MS25011-1	82A- 8	1
MS25027-2	113 - 13	5
MS25036-102	111 -	13
MS25036-103	123 -	7

PART NUMBER	FIG AND INDEX NO	QTY /AC
MS25036-107	126 -	2
MS25036-108	126 -	2
MS25036-12	114A- 11	3
MS25036-149	123 -	2
MS25036-153	123 -	4
MS25036-2	114A- 1	314
MS25036-25	118 -	6
MS25036-27	118 -	6
MS25036-3	114A-	45
MS25036-48	114A- 9	21
MS25036-49	114A- 1	68
MS25036-53	114A- 11	6
MS25036-56	114A- 11	2
MS25036-6	114A- 1	10
MS25036-7	114A- 6	15
MS25036-8	114A-	11
MS25041-1	126 - 8	1
MS25041-10	126 - 9	1
MS25041-4	111 - 20	3
MS25041-6	130 - 46A	1
MS25042-10	118 -	1
MS25042-18	118 -	1
MS25068-21	111 - 7	1
MS25069-1495	113 - 15	6
MS25080-5	103 - 23	6
MS25082-21	126 -	4
MS25083-1BB4	95 - 7E	2
MS25083-1BB5	95 - 20C	4
MS25083-1BB6	95 - 7D	3
MS25083-1BB8	95 -20E	1
MS25083-2AA4	8 - 20	2
MS25083-2AA5	8 - 29	2
MS25083-2AB8	14 - 52	1
MS25083-2AC4	8 - 25	2
MS25083-2AC6	46 - 18	2
MS25083-2BB3	61A- 7	1
MS25083-2BB4	103 - 21	2
MS25083-2BB5	57 - 9A	7
MS25083-2BB6	14 - 54	7
MS25083-2BB8	9 - 65	11
MS25083-2BC4	9 - 3	5
MS25083-2BC5	9 - 61	2
	123 - 11	2
	123 - 16	2
	123 -	4
MS25083-2BD4	13 - 46	2
	121 - 51	REF
MS25083-2BE8	19 - 43	1
MS25083-2CC7	11 - 4	1
MS25083-2CC8	77A- 27	2
MS25083-4DE6	103 - 32	2
MS25085-1	78 - 23	REF
	121 - 41	1
MS25089-3C	111 - 5	1
MS25089-3CR	111 - 18	1
	130 - 37	1
MS25089-4B	72 - 17B	2
MS25089-4C	123 - 4	1
	129 - 44	1
	130 - 11	1
	130 - 32	1
	130 - 41	1
MS25089-5C	129 - 43	2
MS25128-1	109 - 32	3
MS25171-1S	119 - 14	4
MS25182-2	106 -	2
	106 -	2
MS25201-7	126 - 7	1
MS25219-3	121 - 38	1
MS25219-4	102 - 2	REF
MS25224-1	111 - 33	3
MS25224-3	124 - 9	1
MS25226-2-2	102 -	18
MS25226-2-3	109 - 21	3

PART NUMBER	FIG AND INDEX NO	QTY /AC
MS25226-2-4	110 -	3
MS25226-2-5	123 -	2
MS25226-2-6	110 -	1
MS25226-4-2	107 - 52	5
MS25226-4-3	0 -	2
MS25226-4-4	0 -	3
MS25227-1	102 -	104
MS25227-1A	103 -	2
MS25227-1A5	110 -	2
MS25227-2	109 -	15
MS25227-2A	115 -	2
MS25231-313	109 -	2
MS25237-326	130 -	8
MS25237-327	109 -	85
MS25237-328	126 -	3
	130 -	2
MS25241-4553	7 - 28	REF
	119 - 13	2
MS25244-20	0 - 25B	1
MS25244-7	0 - 25A	1
MS25309-7512	119 -	2
MS25324-4	109 - 40	1
MS25325D2	109 - 41	1
MS25332-1	109 -	2
MS25337-327	111 -	3
MS26574-10	105 - 49A	1
	112 - 35	2
MS26574-5	0 - 23A	1
	112 - 38	1
MS27037-1-09	21 - 8	2
MS27039-08-11	135B-	8
MS27039-0808	110 - 65	3
MS27039-0809	22 - 28A	1
MS27039-1-03	83 -	1
MS27039-1-04	135B- 13	8
MS27039-1-06	14 - 32A	26
MS27039-1-07	14 - 27	139
MS27039-1-08	21 -15Q	122
MS27039-1-09	14 - 43B	31
MS27039-1-10	61A-	6
MS27039-1-11	21 - 45	15
MS27039-1-12	12 - 8	17
MS27039-1-14	21 - 9D	16
MS27039-1-15	42 - 12	4
MS27039-1-16	21 - 9E	18
MS27039-1-17	18 - 2	8
MS27039-1-19	95 - 3C	2
MS27039-1-21	95 - 3A	2
MS27039-1-23	95 - 2	2
MS27039-1-24	18 - 23	4
	82 -	
MS27039-1-28	18 - 17	5
MS27039-1-30	83 - 7	4
MS27039-1-32	72 - 15	1
MS27039-4-04	34 - 5	8
MS27039-4-26	135B-	4
MS2712-1-12	107 - 67	1
MS27212-1-10	108 - 9	8
MS27212-1-12	109 - 16	8
	128 - 14	1
MS27212-1-15	127 - 3	3
MS27212-1-16	130 - 6	1
MS27212-1-19	110 - 44	2
MS27212-1-2	103 - 42	10
MS27212-1-20	105 - 38C	1
	106 - 45A	REF
	110 - 78	1
MS27212-1-3	124 - 20	1
MS27212-1-4	107 - 42	5
	119 - 25	REF
	132 - 15	1
MS27212-1-5	107 - 39	7
MS27212-1-6	102 - 16	7
MS27212-1-7	109A- 17	5

PART NUMBER	FIG AND INDEX NO	QTY /AC
MS27212-1-8	110 - 23	8
MS27212-1-9	115 - 38	
MS27291-2	125 -	1
MS27291-6	128 -	1
MS27400-21	110 - 73	1
MS27401-1	110 - 57	2
MS27433-600	102 - 32	REF
MS27473T18B-32S	123 -	1
MS27641-10	67 - 10A	4
MS27641-12	9 - 8	2
MS27641-5	35 - 9	8
MS27641-6	63 - 9B	10
MS27641-8	63 - 4B	2
MS27643-4	5 - 36	2
MS27643-6	4 - 55	2
MS27645-3	10 - 3	2
MS27645-3A	9 - 10	4
MS27645-4	11 - 3	3
MS27645-5	13 - 35	2
MS27648-16	70 - 12	2
MS27648-21	68 - 3A	3
MS27648-25	68 - 1A	3
MS27648-33	67 - 1A	2
	77A- 23	2
MS27975-2	66 - 25	2
MS27980-13C	0 - 3	20
MS27980-15N	22 - 7	2
MS28055-11	130 -	6
MS28055-12	130A- 11	2
MS28741-3-0090	25 - 26	REF
MS28741-4-0210	25 - 25	REF
MS28773-04	30 - 27C	1
	89 -	2
MS28774-007	86 - 1J	3
MS28774-010	82 -	15
MS28774-011	83 -	1
MS28774-012	82 -	1
MS28774-014	88 -	1
MS28774-016	86 - 1B	18
MS28774-020	82 -	2
MS28774-023	82 -	2
MS28774-111	87 -	4
MS28774-112	87 -	2
MS28774-113	26 - 24C	4
MS28774-114	86 - 1D	6
MS28774-115	83 -	1
MS28774-116	81 -	2
MS28774-118	83 -	1
MS28774-216	26 -24F	4
MS28774-224	86 -	2
MS28775-006	83 - 5A	14
MS28775-007	81 - 1K	2
MS28775-008	83 - 1A	6
	101 -	1
MS28775-009	81 - 1N	3
MS28775-010	78 -	16
MS28775-011	83 - 8C	2
MS28775-012	39 -	29
MS28775-014	86 - 1G	11
MS28775-015	81 - 1M	11
MS28775-016	81 - 1A	21
MS28775-017	88 - 1A	4
MS28775-018	88 - 1F	1
MS28775-020	82 - 6E	2
MS28775-023	82 - 1B	1
MS28775-028	81 - 1E	2
MS28775-110	83 - 1C	5
MS28775-111	83 - 5B	9
MS28775-112	87 -	1
MS28775-113	26 - 24B	6
MS28775-114	83 - 5D	8
MS28775-115	83 - 8B	3
MS28775-116	81 - 1D	3
MS28775-117	83 - 8E	1

PART NUMBER	FIG AND INDEX NO	QTY /AC
MS28775-118	83 - 8D	3
MS28775-123	83 -	1
MS28775-130	26 -24G	2
MS28775-213	81 - 1B	1
MS28775-214	83 - 1B	4
MS28775-216	26 -24E	3
MS28775-224	86 - 20C	2
MS28777-4	39 -	17
MS28777-6	98 -	1
MS28778-04	89 - 3	2
MS28778-12	87 - 85	2
MS28778-16	85 -	1
MS28778-20	85 - 4	1
	85 -	1
MS28778-3	26 - 24A	2
MS28778-4	25 - 13A	32
	81 -	1
	81 -	2
	81 -	3
	83 -	4
	83 -	2
	83 - 8F	1
	83 -	8
	83 -	1
	83 -	1
	85 -	1
	85 -	1
	85 -	1
	89 -	2
	90 -	2
	90 -	6
	97 -	21
MS28778-5	85 -	1
MS28778-6	39 -	2
	85 -	1
	86 -	2
	86 -	3
	86 -	2
	86 -	3
	86 -	1
	86 -	1
	86 -	2
	86 -	2
	87 - 89	2
	87 - 92	2
	91 -	4
	91 -	2
	131 -	2
MS28778-8	83 - 5C	2
	85 -	1
	86 -	2
	86 -	1
	86 -	1
	86 -	1
	87 -	1
	87 -	1
MS28885-20	61 - 20	1
MS28885-4	61 - 5	1
MS28932-2	26 - 24D	2
MS29512-04	61A-	3
MS29512-05	61A-	13
MS29512-06	61C- 14	2
MS29512-10	60 -	8
MS29512-12	61A-	7
MS29512-16	60 -	1
MS29512-4	60 -	3
MS29512-5	60 - 22C	1
MS29512-6	57 - 21	7
MS29513-025	60 - 18B	1
MS29513-112	98 -	1
MS29513-115	60 - 22B	1
MS29513-118	60 -	2
MS29513-12	19 - 29C	86

PART NUMBER	FIG AND INDEX NO	QTY /AC
MS29513-120	60 - 8B	2
MS29513-137	60 -	3
MS29513-210	61C- 7	2
MS29513-214	61A-	2
MS29513-235	60 - 18C	1
MS29513-248	57 -	4
MS29513-339	58 -	1
MS29513-8	60 - 22A	1
MS29513-9	60 - 10A	1
MS29513UDN024	60 -18F	1
MS29513UDN910	60 -18E	1
MS29528-6	57 - 29	1
	58 - 17	2
MS3057-12A	125 -	2
MS3057-12B	118 -	4
MS3057-16A	118 -	1
MS3057-6A	128 -	3
MS3100R14S5S	128 -	2
MS3106R10SL3S	61A- 51	
	114 -	14
MS3106R10SL4S	114 -	1
MS3106R14-5S	114 -	1
MS3106R14S2S	106 -	
	114 -	3
MS3106R14S2SX	100A- 7	1
MS3106R16S8S	106 -	1
MS3106R18-1P	61D- 39	2
MS3106R20-18P	106 - 11A	1
MS3106R20-18S	114 -	1
MS3106R20-27S	106 -	3
MS3106R20-29S	125 - 11	1
MS3106R24-11S	103 - 55	2
MS3106R24-12S	115 - 52	1
MS3106R24-28S	114 -	1
MS3106R28-12S	128 -	2
MS3107B14S5P	134A-	2
MS3108R10SL3S	106 -	2
MS3108R22-5P	106 - 2	1
MS3108R22-6S	106 - 6	1
MS3119E16-26	128 - 2	1
MS3119E20-41	123 - 28	1
MS3120E20-41S	129 - 52	1
MS3126F14-12S	128 -	1
MS3126F14-15S	128 -	1
MS3154-18	123 -	1
MS3181-14	126 - 44	1
MS3181-16C	124 - 11	2
MS3320-3	112 - 45	2
MS3338-40	110 -	2
MS3367-5-9	100A- 11	10
MS3373A1	111 -	8
MS3373B1	123 -	2
MS34076L12-10S	128 - 74	1
MS3417-14N	107 -	1
	114 -	1
MS3420-10A	125 -	2
MS3420-12	118 -	6
MS3420-16	118 -	1
MS3420-6	134A-	2
MS3420-84	125 -	2
MS3476L14-12S	107 - 70	1
	114 -	1
MS3476L16-26P	128 - 72	1
MS3476L16-26S	128 - 75	1
MS3476L20-41P	123 - 27	1
MS3476L20-41S	123 - 29	1
	126 -	1
MS3476L20-41SW	123 - 31	1
MS3476L22-55S	128 - 73	1
MS35058-22	126 - 6	2
MS35058-23	129 - 30	3
MS35058-24	111 - 9	2
MS35058-27	129 - 23	2
MS35058-30	124 - 10	1

PART NUMBER	FIG AND INDEX NO	QTY /AC
MS35059-21	129 - 29	1
MS35059-23	111 - 6	4
	130 - 36	1
MS35059-26	111 - 4	1
MS35059-27	111 - 8	1
MS35059-30	124 - 8	1
MS35205-215	110 - 79	2
MS35206-203	109 -15R	12
MS35206-213	111 -	10
MS35206-214	105 - 63	6
MS35206-215	105 - 38D	71
MS35206-216	103 -	17
MS35206-217	14 - 53	79
MS35206-218	107 -	10
MS35206-219	72 - 19A	18
MS35206-220	72 -17G	2
MS35206-221	115 - 24	2
MS35206-222	121 - 33	2
MS35206-223	127 - 12	3
MS35206-226	34 -	2
MS35206-227	105 - 51	69
MS35206-228	34 -	34
MS35206-229	24 - 8A	24
MS35206-230	101 - 12A	100
MS35206-231	8 - 21	25
MS35206-232	8 - 22	8
MS35206-233	130A- 12	8
MS35206-235	110 -	2
MS35206-238	124 - 14	2
MS35206-241	96 - 40	33
MS35206-242	108 - 4H	16
MS35206-243	102 -	74
MS35206-244	23 - 48	70
	133 -	
	134A- 26	6
MS35206-245	20 - 16B	609
	128 - 81	REF
	128 - 83	REF
	129 - 14	36
MS35206-246	61 - 7A	27
MS35206-247	61 - 7B	56
MS35206-248	47 - 12	26
MS35206-249	31 - 2G	54
MS35206-250	106 - 18	20
MS35206-251	106A- 2A	9
MS35206-252	113 - 33	3
MS35206-253	117 - 54	11
MS35206-254	106A- 3	1
MS35206-261	128 - 12	5
MS35206-263	14 - 55	2
MS35206-264	14 - 56	2
MS35206-265	115 - 41	3
MS35206-325	124 - 16A	8
MS35206-326	103 -	2
MS35206-327	123 -	2
MS35206-328	82A- 9	2
MS35206-329	124 - 25	2
MS35206-330	124 - 22	2
MS35206-332	125 - 2J	5
	128 - 82	REF
MS35206-333	106A- 2	23
MS35206-334	106 - 39	4
MS35206-340	105 - 14	1
MS35206-361	107 - 65	3
MS35206L04	111 -	2
MS35207-230	18 - 52	1
MS35207-243	128 - 39	4
MS35207-245	121 - 6	27
MS35207-259	94 - 17	6
MS35207-260	14 - 23	4
MS35207-261	10 - 11	51
MS35207-262	9 - 22	85
MS35207-263	18 - 51	170
	121 - 37B	AR

PART NUMBER	FIG AND INDEX NO	QTY /AC	PART NUMBER	FIG AND INDEX NO	QTY /AC	PART NUMBER	FIG AND INDEX NO	QTY /AC
	123 -	83	MS35489-6	88 -45	14	NAS1021H3	30 -	1
MS35207-264	17 - 32	164	MS35489-6S	60 - 9B	1	NAS1080-6	28 -	2
MS35207-265	88 - 11B	136	MS35489-7	106 -20	3	NAS1080-8	28 -	4
MS35207-266	61 - 15B	31	MS35489-75	29 - 2	1	NAS1089-24	135C- 4	1
MS35207-267	58 -	12	MS35489-8	88 -41B	4	NAS1096-3-10	115 - 4	4
MS35207-268	61A-	19	MS35489-9	107 -31	3	NAS1103-10D	70 - 8	6
MS35207-269	82A- 12	23	MS35649-202	115 -	2	NAS1103-11D	10 - 4	12
MS35207-270	106 - 24	5	MS35649-222	109 -	6	NAS1103-12	63 - 8	3
MS35207-272	114 - 28	1	MS35649-224	109A-	4	NAS1103-12D	40 -12	4
MS35207-273	106 - 27	6	MS35649-2314	19 -29D	61	NAS1103-14	5 -46	8
MS35207-281	105 - 59	1	MS35649-242	110 -	6	NAS1103-14D	40 -13	2
MS35207-284	138 -	4	MS35649-262	109 -	4	NAS1103-15D	71 -32	2
MS35214-109	130 -	6	MS3565-302	109A-	4	NAS1103-16	19 -16	6
MS35214-14	130 - 70	4	MS35650-302	103 -	137	NAS1103-18	19 -33	4
MS35214-17	130B- 28A	6	MS35650-3252	142 -	1	NAS1103-19D	72 -23	1
MS35214-24	130 - 19C	2	MS35650-3312	105 -	2	NAS1103-2	63 -34	29
MS35214-27	73 - 15	49	MS35790-17	132 -	4	NAS1103-20	19 -34	4
MS35214-28	130 -	2	MS37039-1-10	113 -22	2	NAS1103-21	76 -29	2
MS35214-29	129 -	41	MS51957-128	101 - 4B	2	NAS1103-22	21 -32	1
MS35214-30	123 -	13	MS51957-51	38 -18A	2	NAS1103-29	19 -32	2
MS35214-31	126 -	8	MS51958-1	30 -42	1	NAS1103-3	21 -33	16
MS35218-42	4 - 57A	20	MS75009-30	108 -4G	2	NAS1103-4	5 -21	65
MS35265-2	130 - 26A	24	MS75009-33	108 -4F	1	NAS1103-4D	82A- 4	1
MS35265-43	105 - 67	1	MS9012/16-0013	123 -34	1	NAS1103-5	21 -20	4
MS35273-30	111 - 24	5	MS9015-04	85 -14	1	NAS1103-6	34 -13	30
MS35276-269	123 -	16	MS90298-2	19 -42	1	NAS1103-7D	70 -26	4
MS35333-112	126 -	4		19 -42		NAS1103-8	31 -10A	22
MS35333-19	142 -	1	MS9048-006	78 -14A	8	NAS1103-9D	23 - 5	6
MS35333-35	109 -	10	MS9048-036	70 -30B	4	NAS1105-11	27 -20	2
MS35333-36	109 -	38	MS9058-04	81 -	20	NAS1105-12D	13 -45	2
MS35333-38	45 -	9	MS9058-06	82 -	1	NAS1105-15	26 -25	2
MS35333-39	123 -	3		86 -	3	NAS1105-24	26 -14	3
MS35333-40	142 -	1		86 -	3	NAS1105-27D	13 -36	2
MS35333-42	19 -	1		86 -	1	NAS1105-30	61D-40	2
MS35335-31	99 -	17		86 -	1	NAS1105-49	61D-41	4
MS35335-32	81 -	79		87 -88	2	NAS1105-6	22 -33	1
MS35335-33	105 -	1		91 -	2	NAS1105-7	27 - 6	2
MS35335-34	105 -	2	MS9058-08	86 -	5	NAS1105-8D	67 - 8	4
MS35335-35	103 - 24	4	MT1477/ARC552	123 - 1	1	NAS1106-24	11 -12	2
MS35337-40	130 -	6	MT3513/APX	123 -	1	NAS1106-28	11 -14	1
MS35338-10	128 - 29	1	MT4781/ARN	123 - 7	1	NAS1106-29D	9 -64	2
MS35338-100	129 -	4	MT5064/ARC504	123 -14	1	NAS1106-32D	69 -11	2
MS35338-145	133 -	8	MT5069/ARN508	123 - 8	1	NAS1106-46	11 -15	1
MS35338-39	103 -	28		123 -35	REF	NAS1106-58D	63 -20	1
MS35338-40	14 - 53	17	MT5154/ARN504V	123 - 3	1	NAS1106-6	118 -31	2
MS35338-41	18 -	9	MVT60050-10	52 -	2	NAS1106-68D	63 -19	1
MS35338-42	99 -	6	MW4602003-1	17 -	REF	NAS1106-7	134A- 3	4
MS35338-43	14 - 56	156		18 -	REF	NAS1106-9	4 -32	3
MS35338-44	74 -	3		32 -	REF	NAS1107-17D	45 -29	REF
MS35338-45	105 -	1	MX5163/ARN504V	123 - 4	1		89 -15	2
MS35338-48	16 -	1	N1C	110 -80	1	NAS1108-44D	63 - 5	1
MS35426-13	139 -	2	N30A26	122 - 1	1	NAS1110-27D	37 -18	REF
MS35426-14	143 - 40	1	N50-250SH	96 - 6	1		38 -16	2
MS35426-15	140 - 14	1		98 -14	1		44 -26	REF
MS35446-12	52 -	1		98 -24B	1	NAS1154-6	4 -41	4
MS35489-1	72 - 20	1	NAS1003-10	57 -15A	2	NAS1155-6	4 -	
MS35489-10	71 - 23	1	NAS1003-11	58 -16	3	NAS1201B6-12	8 -11	4
MS35489-11	4 - 59	17	NAS1003-12A	22 -42	6	NAS1201B6A11A	94 -26	1
MS35489-12	60 - 23A	1	NAS1003-13	58 -16A	1	NAS1201B6A6A	61B-	1
MS35489-12S	115 - 56	1	NAS1003-14A	22 -41	140	NAS1201B6A8A	94 -23	2
MS35489-14	4 - 58	5	NAS1003-14H	26 - 7	4	NAS1201C10B10B	20 -52	2
MS35489-16	106 - 22	3	NAS1003-19H	67 -23	2	NAS1201C6-10	23 -24	6
MS35489-17	106 - 13B	12	NAS1003-2A	52 -2E	38	NAS1201C6A78	32 -44	4
MS35489-18	114 - 50	6	NAS1003-3	24 -20	8	NAS1201C6B5	34 -46	1
MS35489-2	53 - 2	3	NAS1003-58A	57 -27	4	NAS1202-2	24 -56	46
MS35489-20	115 - 46	4	NAS1003-6	24 -26	2	NAS1202-26	46 - 6	2
MS35489-22	135 - 54	8	NAS1003-6A	52 -33	2	NAS1202-3	5 -76	35
MS35489-3	106 - 7B	2	NAS1003-7	24 -27	2	NAS1202-4	23 -39	5
MS35489-36	98 - 12	1	NAS1004-10A	52 -28	4	NAS1202-6	24 -51	2
MS35489-38	104 - 23	2	NAS1004-16A	52 -16	4	NAS1203-1	9 -39	10
MS35489-4	109 -15E	24	NAS1004-2A	48 -17	4	NAS1203-10	4 -53	32
MS35489-43	106 - 16A	1	NAS1004-5A	52 -14	36	NAS1203-12	24 -53	22
MS35489-45	106 - 15A	1	NAS1004-6A	52 -	1	NAS1203-14	135 -17	2
MS35489-5	128 - 30	1	NAS1005-10A	43 -23	12	NAS1203-2	6 -14	373

PART NUMBER	FIG AND INDEX NO	QTY /AC
NAS1203-20	9 -	30
NAS1203-3	2 -21	487
NAS1203-4	6 -28	8
	12 - 4B	38
	14 -35	39
NAS1203-5	7 - 3	20
NAS1203-6	5 -29	8
NAS1203-7	20 -	136
NAS1203-8	20 -47	128
NAS1203-9	16 -33	18
NAS1204-1	5 - 5	12
NAS1204-10	46 -13	4
NAS1204-12D	72 - 7	1
NAS1204-15	4 -34	12
NAS1204-25	67 -27	1
NAS1204-26	16 -20	2
NAS1204-29	16 -21	2
NAS1204-32	16 -19	2
	20 -60	REF
NAS1204-5	135 -10	4
NAS1204-8	46 -14	4
NAS1205-8	134A- 2	4
NAS1222-6D	135B-	4
NAS1291C08	30 -	1
NAS1303-8H	49 - 6	6
NAS1304-12	103 -	4
NAS1306-6	103 -	4
NAS1334A2S13	135C-11	1
NAS1334A5S12D	135C-	1
NAS1334A5S1.3	135 -66	4
NAS1334S6S18	32 -45	4
NAS1336A2S24	135C- 7	2
NAS1351-3H6	98 -23C	6
NAS1354DC2C47	135C-15	2
NAS1405-4	135B-18	2
NAS1405-5	135B-	4
NAS1407P7M8	61D-	2
NAS1593-111	61C-15	2
NAS1598-3Y	61A-	1
NAS221-12	21 -17	2
NAS226-8	34 -1G	1
NAS3003-12	19 -	4
NAS3003-13	19 -	6
NAS3003-15	19 -	4
NAS3003-8	19 -	8
NAS333CPA4	20 -	8
NAS333CPA4-5	20 -43	8
NAS333CPA5	24 - 4	28
NAS427K14	31 - 6	2
NAS427K9	65 -36	5
NAS428-3-5	35 - 2	2
NAS428-4-12	18 -15	4
NAS428-4-16	10 - 7	4
NAS428-5-12	67 - 7	2
NAS428-5-20	67 - 6	3
NAS428H3-7	70 -14	4
NAS428H5-14	66 -11	4
NAS428H5-20	67 -	
NAS428K5-11	76 -39	2
NAS428KH4-10	70 -15	2
NAS428KH4-12	71 -11	1
NAS428KH4-6	70 -15A	2
NAS42DD5-45	135 - 5	2
NAS42DD6-200	57 -	4
NAS43-10-102	67 -10B	2
NAS43-3-16	121 -31	20
NAS43-3-32	87 -58	1
NAS43-3-37	86 -	2
NAS43-3-40	129 -	2
NAS43-3-43	129 -	2
NAS43-3-5	18 -10A	2
NAS43-3-56	18 -	
NAS43-3-63	18 -	
	18 -	

PART NUMBER	FIG AND INDEX NO	QTY /AC
NAS43-4-129	22 -	2
NAS43-4-21	45 -	4
NAS43DD0-24	72 - 19B	4
NAS43DD048	107 -	2
NAS43DD1-16	109 -	2
NAS43DD1-20	108 - 8B	8
NAS43DD1-32	115 - 24A	2
NAS43DD1-40	121 -	2
NAS43DD1-56	110 -	2
NAS43DD1-64	124 - 16B	15
NAS43DD1-8	119 -	4
NAS43DD1-98	124 - 15	2
NAS43DD10-17	69 - 5A	2
NAS43DD10-7	69 - 5B	2
NAS43DD10-87	73 - 8	1
NAS43DD12-6	65 - 15	4
NAS43DD3-10	134A-	4
NAS43DD3-11	65 -	2
NAS43DD3-12	100 - 11B	8
NAS43DD3-13	71 -	1
NAS43DD3-14	21 - 9B	2
NAS43DD3-16	24 -30E	25
NAS43DD3-19	100A- 4	8
NAS43DD3-20	100 - 11A	6
NAS43DD3-24	21 - 9C	43
	128 - 84	REF
	135A-	2
NAS43DD3-26	121 -31H	3
NAS43DD3-28	105 - 13	34
NAS43DD3-32	58 -	70
NAS43DD3-34	135B-	2
NAS43DD3-35	87 -	2
NAS43DD3-36	71 -	1
NAS43DD3-37	86 -	2
NAS43DD3-38	125 -15Q	1
NAS43DD3-39	95 - 3D	2
NAS43DD3-4	18 - 26A	5
NAS43DD3-40	84 - 17B	27
NAS43DD3-43	106 - 14	1
NAS43DD3-46	84 -17G	4
NAS43DD3-47	95 - 3B	2
NAS43DD3-48	87 -	45
NAS43DD3-50	96 -	1
NAS43DD3-52	96 - 24	1
NAS43DD3-56	114A- 45	1
NAS43DD3-58	71 -	1
NAS43DD3-60	95 - 3	2
	135A- 4	2
NAS43DD3-64	21 - 32A	11
NAS43DD3-66	117 - 48	1
NAS43DD3-72	114A- 50	1
NAS43DD3-8	113 - 20	6
NAS43DD3-80	106 -22F	3
NAS43DD3-88	117 - 23	3
NAS43DD3-9	18 - 18	8
NAS43DD4-10	31 - 5	4
NAS43DD4-12	74 - 42	1
NAS43DD4-16	74 -	8
NAS43DD4-19	74 - 30	1
NAS43DD4-256	11 - 6	1
NAS43DD4-26	105 - 26	4
NAS43DD4-35	41 - 2A	4
NAS43DD4-64	82A- 7	1
NAS43DD4-7	70 - 19A	2
NAS43DD4-8	129 -	1
NAS43DD5-48	22 -	2
NAS43DD6-9	29 - 30	1
NAS43DD8-76	63 - 4A	1
NAS43DD9-63	26 - 27	4
NAS43HT2-39	65 -	1
NAS43HT3-14	55 - 23	4
NAS43HT3-32	115 - 62	2
NAS43HT3-4	108 - 5C	2
NAS43HT3-56	18 - 19	4

PART NUMBER	FIG AND INDEX NO	QTY /AC
	18 -19	
NAS43HT3-63	18 -13A	4
	18 -13A	
	18 -23A	4
	18 -23A	
NAS43HT4-12	27 -24A	2
NAS43HT4-18	123 -10	4
NAS43HT4-7	48 -17C	REF
NAS460-416	18 -	2
NAS464-4A8	20 -28	6
NAS464-4A9	20 -29	6
NAS464P4-14	49 -13	4
NAS464P4-17	66 -23	4
NAS464P4A12	30 - 9	4
NAS464P4A7	34 -27	8
NAS464P4A8	34 -26	8
NAS464P5A20	16 - 5	1
	25 -23	REF
NAS464P5A9	34 -25	8
NAS464P5LA32	135 -27	8
NAS464P6-33	63 -10	1
NAS464P6LA32	135 -58	8
NAS464P7-62	20 -36	4
NAS487-13	129 -	15
NAS487-15	126 -	82
NAS487-16	129 -	4
NAS487-21	130 -	4
NAS501-3-4A	133 - 7A	6
NAS501-3-6	54 - 3A	3
NAS501-3-6A	135 -73	2
NAS501-4-4A	54 -16	3
NAS509-10	49 -11	2
NAS509-4	40 -	26
NAS509-5	52 -23	12
NAS509-6	49 -	38
NAS509-7	75 -18	2
NAS509-8	27 -19	1
NAS509L4	70 -	8
NAS509L5	52 -25	8
NAS509L6	49 -	3
NAS509R4	135B-	2
NAS513-5	70 -	2
NAS517-3-1	16 -12	32
NAS517-4-2	123 -	4
NAS517-4-27	12 -19	2
NAS528A6	65 -	2
NAS560CK3P10	24 -47	51
NAS560CK3P11	24 -53A	57
NAS560CK3P27	100 -17	2
NAS560CK3P7	24 -50	6
NAS560CK3P8	24 -45	44
NAS560CK3P9	24 -46	20
NAS560HK3-2	7 -27	52
NAS561-10-13	135B-40	4
NAS561-2-11	74 -	1
NAS561-2-7	96 -30	4
NAS561-6-22	44 -	2
NAS561C4-8	31 -12	2
NAS561C6-22	29 -27	1
NAS561C6-48	29 -15	1
NAS561C812	24 -42B	4
NAS561P2-10	47 -24	4
NAS561P2-16	72 -	1
NAS561P2-6	65 -	2
NAS561P2-7	40 -	2
NAS561P2-9	18 - 9	2
NAS561P3-18	40 - 4	2
NAS561P3-5	140 -15	1
NAS561P3-7	139 -49	1
NAS561P3-8	138 -	5
NAS561P3-9	144 - 8	2
NAS561P4-10	47 -37A	2
NAS561P4-13	142 - 9	1
NAS561P4-16	45 - 6A	4

PART NUMBER	FIG AND INDEX NO	QTY /AC
NAS561P4-18	82 -30	2
NAS561P4-8	43 -22	4
NAS561P5-30	26 -16	1
NAS561P6-15	136 - 4	1
NAS561P6-24	138 -	2
NAS6203-10	18 -	4
NAS6203-2	21 -28	149
NAS6203-4	35 - 4A	36
NAS6204-10	4 -44	12
	42 -15	REF
	66 -12	4
NAS6204-10D	41 - 7	6
NAS6204-11	4 -45	6
NAS6204-11D	13 -48	6
NAS6204-12	28 - 2	1
NAS6204-12D	41 -10	3
NAS6204-13	65 - 6	16
NAS6204-13D	11 - 7	2
	48 - 9	REF
	64 -36	16
	71 -54	REF
	77 -41	2
NAS6204-14	48 - 4A	1
	49 -18	REF
NAS6204-14D	63 - 5D	11
NAS6204-15D	48 - 4	1
	49 -17	REF
	69 -34	22
	83 -49	REF
NAS6204-16	4 -33	11
NAS6204-16D	64 -38	22
NAS6204-17D	27 -24	2
NAS6204-18	5 -41	14
NAS6204-18D	46 -16	6
NAS6204-19	5 -42	2
	8 -32	REF
NAS6204-19D	8 -27	2
NAS6204-2	103 -33	1
NAS6204-20D	46 -17	3
NAS6204-21	77A-37	2
NAS6204-22D	41 - 3	2
NAS6204-23D	13 -40	6
NAS6204-24	26 -20	2
NAS6204-24D	45 -24	3
	71 -53	REF
	74 -27	2
NAS6204-25D	8 -18	2
NAS6204-26D	69 -31	1
NAS6204-28D	8 -23	6
NAS6204-3	26 - 2	21
NAS6204-32D	65 -20	4
NAS6204-34	49 - 4	2
NAS6204-34D	67 - 3	3
NAS6204-36	9 -60	6
NAS6204-38	9 -63	2
NAS6204-4	4 -48	20
NAS6204-40	77A-32	2
NAS6204-42	27 -16	1
NAS6204-44	38 -13	2
NAS6204-5	4 -47	34
NAS6204-50	11 - 8	3
NAS6204-50D	5 -54	2
NAS6204-6	22 -34	13
NAS6204-7	24 -32	6
NAS6204-7D	67 - 3A	4
NAS6204-8	4 -46	11
NAS6204-84	11 - 5	1
NAS6204-8D	67 - 2	4
NAS6204-9	4 -35	16
NAS6205-21D	75 -13	4
NAS6205-30D	75 -22	2
NAS6205-36D	35 -11	2
NAS6205-38D	35 -12	2
NAS6206-28D	90 - 6	2

PART NUMBER	FIG AND INDEX NO	QTY /AC
NAS6208-11D	91 - 5	2
NAS6208-18D	91 - 4	2
NAS6209-22D	3 - 5	2
NAS623-2-1	9 -68	12
NAS623-2-2	5 -68	22
	29 -	AR
	35 -15	15
NAS623-2-4	35 -16	2
NAS623-2-5W	65 -26	2
NAS623-2-6	12 -24	5
NAS623-3-1	4 -	96
NAS623-3-10	6 - 4	12
NAS623-3-11	18 -10	3
NAS623-3-12	12 -11	18
NAS623-3-13	5 -38	16
NAS623-3-14	24 - 2A	8
NAS623-3-15	14 - 4	12
NAS623-3-16	14 -20	14
NAS623-3-17	14 - 5	16
NAS623-3-18	134A-37	6
NAS623-3-19	14 - 6	2
NAS623-3-2	2 -14	93
	9 -72	REF
	11 - 6A	135
NAS623-3-20	84 -13	3
NAS623-3-21	44 -28	REF
	45 -32	REF
	82 -48C	13
NAS623-3-22	82 -52	3
NAS623-3-23	84 -15	1
NAS623-3-24	21 -39	4
NAS623-3-26	21 -40	2
NAS623-3-3	5 -56	289
NAS623-3-30	84 -21	1
NAS623-3-31	86 -24	8
NAS623-3-32	84 -20	1
NAS623-3-34	82 - 5	7
NAS623-3-36	134A-43	4
NAS623-3-3W	66 -37	4
NAS623-3-4	5 -27	94
NAS623-3-48	134A-36	2
NAS623-3-4W	66 -37A	4
NAS623-3-5	4 -12	44
NAS623-3-5W	66 -16	8
NAS623-3-6	5 -28	18
NAS623-3-66	85 -15	2
NAS623-3-7	5 -23	60
NAS623-3-8	5 -22	25
NAS623-3-9	12 -12	10
NAS623-4-11	73 -13	6
NAS623-4-12	10 -10	2
NAS623-4-26	12 -17	6
NAS623-4-3	100A-10	4
NAS623-4-42	82 -33	2
NAS623-4-5	130A- 7	3
NAS623-4-6	134A-46	4
NAS623-4-8	9 -22D	2
NAS623-4-9	72 -19	2
NAS624H7	38 - 3	8
	39 -29	REF
NAS625H32	38 -15	8
NAS626-22	49 - 7	4
NAS645-8LS	65 -47	1
NAS649B8S	65 -48	1
NAS651-16S	65 -	1
NAS6603-4	134A-41	4
NAS6603-5	134A-42	4
NAS669-100	13 - 4	2
NAS679A04W	110 -	2
NAS679A06W	109A-	2
NAS679A3	106 -	14
NAS679A3W	100A-	4
NAS679A7	43 -	2
NAS680A3	35 -	2

PART NUMBER	FIG AND INDEX NO	QTY /AC
	35 -	
NAS684A08	31 -	3
NAS689P6-5	4 -	4
NAS689P7-5	4 -	4
NAS707T2	125 -	8
NAS75-4-005	12 -14	6
NAS75-4-008	12 -10	8
NAS75-5-031	35 -10	4
NAS75-6-008	12 - 4	4
NAS75-6-011	12 - 2	2
NAS75-8-009	35 -	4
NAS75-9-009	19 -28	4
NAS77-4-18	61D-47	4
NAS77-5-25	34 -	8
NAS77-8-25	34 -	4
NH1004489-10	52 - 3	1
NS5W0106	124 - 9A	1
NW4505001-1	130A- 8	1
NW4524000-1	103 -58	1
NW4525001-24	101 - 8	1
NW4528468-1	100A-	NP
NW4528471-1	100A- 9	1
NW4601101-1	128 -37	NP
NW4601102-1	123 -	REF
	128 - 1	1
NW4601103-1	128 - 1	1
NW4601104-1	128 - 4	1
NW4601105-1	105 -	
	128 - 8	1
NW4601106-1	128 -12	1
NW4601107-1	128 -33	1
	130 -	REF
NW4601107-2	130 -	1
NW4601107-3	130 -	1
NW4601108-1	128 -33	1
NW4601109-1	112 -	REF
	128 -40	1
NW4601112-1	128 -71	1
NW4601113-1	128 -73	1
NW4601114-1	128 -74	1
NW4601115-1	128 -75	1
NW4601123-1	128 -31	1
NW4601124-1	128 -15	1
NW4601125-1	128 -19	1
NW4601126-1	128 -37	1
NW4601136-1	112 -46	1
NW4601139-1	128 -35	1
NW4601143-1	130 -77	1
NW4601144-1	130 -78	1
NW4601145-1	128 -40	1
NW4601146-1	128 -76	1
NW4601147-1	105 -65	1
NW4601147-10	128 -71	1
NW4601147-2	128 -68	1
NW4601147-3	128 -69	1
NW4601147-4	128 -27	1
NW4601147-5	128 -70	1
NW4601147-6	128 - 4	2
NW4601147-7	105 -68	1
NW4601147-8	105 -64	1
NW4601147-9	105 -70	1
NW4602000-1	9 -72	REF
	12 -	REF
	13 -53	REF
	14 -49	REF
	128 -85	1
NW4602000-3	14 -53	1
NW4602003-1	115 -	REF
	128 -86	1
NW4602005-1	9 -73	6
	12 -27	1
	13 -54	4
P101F12-0	20 -25	12
P101F12-2	20 -24	14

PART NUMBER	FIG AND INDEX NO	QTY /AC
P26B28H6A	103 -47	1
PB4395	34 -	64
PFCS3-1/2-38	111 -	2
PFSC3-1/2-38	0 -12	10
	111 - 2	4
	111 -	4
	111 -40	7
	126 -	4
PFSC3-1/2-8	111 -31	4
PFSC3-1-2-38A	128 -36	2
PHP24	103 -57	2
PJ055B	113 -30	1
PLT1M-M	128 -60	AR
PLT2M-M	128 -60	AR
PP200-4	77A-17	20
PR3-1-2	128 -38	2
PT00SE12-10S	106 -	1
	120 -	1
	120 -	1
PT00SE14-19P	72 -18	1
PT00SE14-19S	114A-	1
	114A-	1
PT00SE16-26S	124 -28	REF
	125 - 4A	2
PT00SE16-8S	120 -	1
PT00SE22-55P	130 -69	1
PT00SE24-61S(SR)	126 -45	1
	128 -	1
PT02E14-19P	126 -35	1
PT06A-14-15S	129 -49B	REF
PT06E12-83P	118 -	2
PT06E18-30S	128 -	1
PT06E20-41P	129 -54	1
PT06E8-3S	118 -	1
PT06E8-4P	125 - 7A	1
PT06S22-21W	114 -	1
PT06SE-18-32S	111 -29	1
PT06SE-19S	114A-	1
PT06SE10-6S	106 -	1
	114A-	1
	117 -	1
	118 -	1
	118 -	1
	120 -	1
	120 -	1
	125 - 8B	1
PT06SE10-6SW	106 -	1
PT06SE12-10P	39 -12	1
	43 -12	2
PT06SE12-10S	106 - 8B	1
	128 -	1
	130A-21	2
PT06SE12-3P	106 - 3	1
PT06SE12-3S	106 -	1
	106 -	1
	106 -	1
	114A-	1
PT06SE14-19P	67 -22	2
PT06SE14-19S	114 -	3
PT06SE14-5S	106 -	1
	118 -	1
	118 -	1
	118 -	1
PT06SE16-23P	125 - 1B	1
PT06SE16-23S	128 -	1
PT06SE16-26S	120 -	1
PT06SE16-8P	115 -53	1
PT06SE16-8S	114A-	1
PT06SE18-32S	114A-	1
	114A-	1
	128 -	1
	128 -	1
	130A-22	1
PT06SE20-16P	106 -10A	1

PART NUMBER	FIG AND INDEX NO	QTY /AC
	118 -	1
PT06SE20-16PW	114 -	1
PT06SE20-16S	114 -	2
PT06SE20-16SW	106 - 3A	1
PT06SE20-39P	120 -	2
PT06SE20-39S	114 -	2
PT06SE20-41P	125 - 1A	2
PT06SE20-41S	125 - 9	3
PT06SE22-21P	106 - 8A	1
	118 -	1
	118 -	1
PT06SE22-21PW	106 - 7A	1
PT06SE22-21S	114 -	3
PT06SE22-55S	114A-	1
PT06SE24-61P	125 - 8A	1
PT06SE24-61S	128 -	1
PT06W10-6S	120 -	1
PT08SE12-10P	125 - 3A	1
PT08SE14-15S	125 - 1D	1
PT08SE24-61P(SR)	125 -15	1
Q1157-2	109 -23A	4
QS200M12S	61C- 4	4
QS200M140S	20 -46	2
QS200M48S	20 - 4	1
	20 - 6A	1
	48 -	2
QS200M56S	55 -11	2
QS200M68W	48 -14	2
QS200M8S	61C-12	4
R1066-1	66 - 3	2
R196M40	66 - 4	4
R310M20	29 - 1	1
R3800-4-0180	135A- 7	2
R3800-4-0314	135A-13	2
R3800-4-0350	134A-54	2
R3805-4-0084	135A- 9	2
R3805-4-0121	135A- 8	2
R3806-4-0100	135A-20	2
R3806-4-0367	135A-23	2
R422M22-1	9 -71	REF
	62 -13	REF
R422M22-3	70 -16	1
R422M25-1	13 -53	REF
	62 -22	REF
	78 - 1	1
R42F24383	129 -22	1
R4G	5 -	36
	18 -	2
	18 -	2
	18 -	32
	18 -	22
	18 -	17
	18 -	17
	23 -	6
	31 -	2
	32 -	19
	32 -	17
	32 -	29
	32 -	20
	32 -	16
	34 -	6
	113 -	4
	130 -	4
R5164M1	135 -39	2
R5306-4-0244	135A-22	2
R532M30-11	66 - 2	2
R532M30-21	66 - 1	2
R819	62 - 2	REF
R819-2	66 -	2
RC20BF103K	127 - 9C	1
RC20GF102K	127 - 6	1
RC20GF561K	126 -34	1
RC32G471K	110 -	2
RC32GF121K	110 -	1

PART NUMBER	FIG AND INDEX NO	QTY /AC
RC32GF151K	110 - 59	1
	123 -	1
	127 - 9B	1
RC32GF221K	110 -	2
RC32GF222K	123 -	1
RC32GF331K	123 -	3
RC32GF470K	110 -	2
RC32GF471K	124 - 17	1
RC32GF561K	123 - 25	7
RC32GF680K	110 -	2
RC32GF681K	123 -	1
RC32GF683K	127 - 9A	2
RCAFL85	134A- 51	2
RCR32G220KM	124 - 29	1
REO12A004-059-6	4 -	2
RF4-4	71 - 31	4
RG115A/U	123 - 35	1
RL07S113J	111 -	1
RM52LHA4972-6-02	109 -	9
	133 -	4
RM52LHA4972-8-02	109A-	8
	133 -	4
RR12060B	56 - 20	REF
RR12060R	60 - 4	1
RR75C	72 -	1
RS2A	102 - 15	3
RT5011/ARC552	123 - 2	1
	125 - 40	REF
RT5014/ARC504	123 - 15	1
	125 - 37	REF
RT5036/ARN504V	123 - 5	1
	123 - 37	REF
	125 - 34	REF
RT5078	123 - 1	1
RT862/APX77	123 - 36	REF
RT862A/APX77	123 - 10	1
	125 - 35	REF
RV4NAYSD103A	126 - 29	1
RW22140	121 - 36	1
RW30G160	108 - 4J	2
RW33G400	108 - 4K	1
RW69G711	111 -	1
RY4NA3B3L01	109 -15Q	3
	130 - 48	1
S0-1019-7125	109 - 36	1
S0-1021-7127	114A-	2
S0-1048-8977	110 - 62	1
S0-1066-001	128 - 18	1
S01000	110 - 83	1
S01012-4616	103 - 45	1
S101F12-08	20 -	26
S1043	2 - 11	2
	4 - 60	1
	8 - 17	2
	9 - 23	2
	12 - 22	2
	34 - 58	1
S1043M	13 - 41	2
	24 - 73	1
	83 - 18	1
	85 -	1
S1125	22 - 29	1
S1191	8 - 9	9
S1192-2-7	85 - 5	1
S1207-18	97 -	AR
S1214-180	97 -	AR
	97 -	AR
	97 -	AR
	97 -	AR
S1222-6-049-1032	47 - 21	2
S1224-3-16	70 - 2A	4
S1225-5-80	65 - 28	1
S1225-6-80	65 - 29	1
S1228-4	135B- 51	2

PART NUMBER	FIG AND INDEX NO	QTY /AC
S1228-5	60 -	1
	60 -12	1
S1228-8	57 -	15
S1228A	61A- 6	1
S1236-10	100 -12A	80
	130B-	AR
S1236-10L	75 -	AR
	130B-	AR
S1236-1216	70 -12A	AR
S1236-416	8 -	AR
	8 -	AR
	55 - 6A	AR
S1236-416L	8 -	AR
	8 -	AR
	46 -	AR
S1236-516	35 -	18
	75 -	AR
S1236-516L	35 -13	4
S1242-6A	49 -	4
S1242-7	40 -	4
S1242AL13-19-16	16 -	1
S1242AL13-19-32	16 -	AR
S1244B	106 -	AR
	106 -41	AR
	114 -	AR
	114A-	AR
	117 -	AR
	117 -	AR
	120 -	AR
	120 -21	AR
S1244B10-44	120 - 5	1
S1244B11-18	117 -34	1
S1244B11-30	117 -31	1
S1244B11-34	120 -	1
S1244B11-41	67 -	2
S1244B12-14	120 - 6	1
S1244B12-15	120 -	1
S1244B12-16	117 - 4	1
S1244B12-42	121 -	1
S1244B12-55	117 - 8	1
S1244B13-12	121 -13	2
S1244B14-22	117 -30	1
S1244B14-3	114A-	AR
S1244B14-79	117 -33	1
S1244B15-17	117 -10	1
S1244B15-49	132 - 2	1
S1244B15-6	120 - 4	1
S1244B16-10	119 -	1
S1244B16-13	120 -	1
S1244B16-24	120 - 7	1
S1244B16-38	117 - 9	1
S1244B16-7	117 -11	1
S1244B16-8	119 -20	1
S1244B18-4	121 -	1
S1244B18-59-1/2	114A-	1
S1244B19-30	67 -28A	1
S1244B27-1	110 -	AR
S1244B30-1	108 -	2
S1244B7-20	117 - 5	1
S1244B7-21	117 -28	1
S1244B7-24	117 - 6	1
S1244B7-83	117 -32	1
S1244B8-21	117 -29	1
S1244B8-48	117 - 7	1
S1244B9-5-1/4	72 -	1
S1244D	117 -	AR
	117 -	AR
S1244D12-3	117 -12	1
S1244D8-3	117 -13	2
S1244D9-3	117 -35	1
S1244E	9 -	REF
	106 -42	AR
	117 -	AR
	120 -15	AR

PART NUMBER	FIG AND INDEX NO	QTY /AC
	120 -31	AR
S1244E11-18	114A-	1
S1244E12-42	118 -	1
S1244E15-10	118 -	1
S1244E15-17	118 -	1
S1244E8-12	118 -	1
S1244F16-9	114 - 7A	1
S1244F9-3	73 -	1
S1246-11-15-63	108 -	4
S1246-16-24-150	28 - 3	1
S1246-16-24-63	99 -	2
S1246-32-32-63	61D-50	AR
S1246-32-52-032	72 -14	1
S1246-66-45-32	3 -	2
S1246-74-49-32	3 -	2
S1246-90-59-32	3 -	2
S1246AB13-12-16	14 -	33
S1246AB15-16-20	19 -	24
S1246AB15-16-63	19 -	2
S1246AB16-22-20	48 -	2
S1246AB16-22-40	48 -	2
S1246AB16-22-50	48 -	2
S1246AB16-22-63	48 -	4
	107 -60	6
S1246AB64-42-60	44 -	2
S1246AB68-42-16	83 -	1
S1246B16-18-125	10 - 8	AR
S1246F10-24-31	130B-	3
S1246K41-38-40	98 -	2
S1246LC25-20-20	11 -12A	3
S1246LS12-12-063	74 -	AR
S1246LS17-16-32	16 -21A	AR
S1246LS17-19-062	31 -2F	AR
S1246LS32-26-110	63 - 4C	2
S1246LS7-8-062	23 -	4
S1246P13-14-40	133 -	4
S1246P13-20-187	133 -	1
S1246SR13-14-250	135B-	4
S1246T12-26-32	7 -	
S1246T16-24-63	99 -	2
S1246T20-14-15	61D-	4
S1256C632-7A	47 -	2
S1256CN1032-14	34 - 1C	3
S1267-9-1196	18 -47	1
S1267-9-1790	10 -15	2
S1267-9-320	32 -15	2
	32 -37	2
S1267-9-400	23 -62	1
S1267-9-440	22 -	1
S1267-9-444	22 -28C	1
S1267-9-4775	7 -11	12
S1267-9-500	22 - 5	1
S1267-9-550	32 - 8	1
S1267-9-670	32 -29	1
S1267-9-690	32 -30	1
S1267-9-850	17 -20	2
S1267-9-968	18 -39	1
S1267-9-980	18 -38	1
S1267-9-995	18 -46	1
S1267-9W1290	14 -44	4
S1277C4-10	29 -13	2
S1282A3	119 - 3C	4
S1286-12-12	96 -49	4
S1286-12-65	96 -43	2
S1286-14-12	96 -11	2
	96 -18	2
S1286-20-12	98 -19	2
S1286-5-10	100 - 4	2
S1286-6-10	100 -13	2
S1289D6-4	81 - 6	1
S1296	57 -	10
	93 -11	AR
	95 -25	AR
	96 -	AR

PART NUMBER	FIG AND INDEX NO	QTY /AC
	97 -	AR
	98 -	AR
	98 -	AR
S1300-1	114 -	1
S1300-2	114 -	3
S1300-3	114 -	1
S1307H1-10	105 -	1
	108 -	1
	108 -	1
	109 -	1
S1307H1-10A	110 -	2
S1307H1-12	109 -	1
	123 -23	3
S1307H1-12A	124 -	3
S1307H1-15	127 - 4	2
	130 -	1
S1307H1-16	130 -	1
S1307H1-19	110 -	2
S1307H1-2	109 -	7
S1307H1-2A	113 -	1
S1307H1-3A	124 -	1
S1307H1-4	107 -	1
	111 -	1
	113 -	1
	115 -	1
	132 -	1
S1307H1-4A	115 -	1
S1307H1-5	108 -	1
S1307H1-5A	110 -	1
S1307H1-6	102 -	2
	111 -	1
	119 -	2
S1307H1-7	109A-	1
S1307H1-8	121 -	1
	121 -	1
	126 -	1
	127 -	1
S1307H1-8A	110 -	3
S1307H1-9A	115 -	1
S1307V1-10	109 -	2
S1307V1-10A	109 -	1
S1307V1-12	123 -	1
S1307V1-20	110 -	1
S1307V1-2A	111 -	1
S1307V1-5	107 -	1
	107 -	1
	110 -	1
	130 -	1
S1307V1-5A	130A-	1
S1307V1-6	109 -	1
S1307V1-6A	109 -	1
S1307V1-7	119 -	2
S1307V1-7B	119 -	2
S1307V1-8	115 -	1
	129 -	1
S1313-4	89 -	2
S1324-3-13	70 -10	2
S1324-3-20	67 -	2
S1324-4-22	75 -	8
S1331A2	108 -10	6
	126 -16	2
S1331A4	130 - 8	2
S1331A6	130 - 5	3
S1331A7	130 - 2	3
S1331D3	111 -	2
S1331D4	111 -	2
S1331E5	0 -14	2
S1338-1	109 -24	14
	126 -36	2
S1338-10	110 -30	3
S1338-2	126 -13	12
S1338-7	126 -39	6
S1339-1-6	102 - 9	REF
S1349	133 -20	1

PART NUMBER	FIG AND INDEX NO	QTY /AC
S1371-3-5C	101 -33	2
S1384-4A4	99 -21	6
S1389	96 -41B	1
S1395-1	134A-28	2
S1412-10	0 -25	1
S1412-15	105 -45	4
S1412-25	105 -46	3
S1412-35	0 -27	1
S1412-5	0 -23	54
	105 -44	7
	105 -62	REF
S1412-50	105 -47	4
S1412-7	0 -24	3
S1413	104 - 9	2
S1414-1	104 -10	4
S1416	104 - 8	2
S1417-2	104 - 2	4
S1419-1	43 -11	2
S1420	104 -	2
S1422-4	82 -	1
	82 -	1
	82 -	1
	82 -	1
	89 -	2
	89 -	2
	89 -	4
	89 -	2
	89 -	4
S1422-6	82 -	9
S1422-8	82 -	1
	87 -78	2
S1426-6	73 -	4
	109 -	7
	111 -	4
	111 -	3
	111 -	3
	111 -	2
	112 -	8
	126 -	2
	129 -	4
	129 -	2
	130 -	4
	130 -	2
	130 -	4
S1427	22 -28B	1
S1439-1032-14	24 -16B	1
	24 -17B	1
	24 -18B	1
S1440	16 -15D	1
	22 -	1
	32 - 9	2
	133 -27	2
S1442-1	48 -	1
S1442-3-5	101 -	2
S1445	126 -	2
S1448-4-28-2	105 -48	3
S1448-4-28-4	105 -49	1
S1451-24	101 -55	2
S1453	101 -55B	1
S1458	24 -67	2
S21908-0900	54 -24A	1
S30641-012	43 -9G	12
S4506	20 -44	AR
S4901-01416	0 - 4	2
S4905	7 - 6	2
	120 - 3	16
S4905-00116	128 -	1
S4905-020	91 - 6	4
S548152K2215	123 -	1
S8171AD22	98 -23B	1
SCB83314-2	104 -	4
SCH-P51	123 -27A	1
SD1	9 -74	6
	12 -28	1

PART NUMBER	FIG AND INDEX NO	QTY /AC
	13 -55	4
	14 -51	1
SE38	133 -	6
SEAL	60 -	1
SL100-08	109 -	19
	130B-	
	133 -	6
SL19381-4-14	52 -	
SL200-4-411	110 -	2
SL201-4AA11	109 -	24
	109A-	39
SL201-5AA11	109 -	59
	133 -	10
	133 -	21
SL201-6AA	102 -	8
SL88-632-38-09	111 -	2
SL88-832-38-09	0 -	2
	107 -	2
	114A-	2
	130B-	4
SM5-7C	75 -17	2
SO1000	109 -37	6
	126 -50	REF
	128 -16	1
SO1004	126 -49	REF
	128 - 4	6
SO1009	114A-	1
SP00E12-83S(003)	107 -56	REF
	114 -	1
SP00E8-4S	107 -29	1
SP00W10-6P(003)	107 -57	REF
	114 -	2
SP06E8-4P	107 -27	1
SPB16-23PS003	126 -47	1
SPB16-8PS003	102 -19	REF
	107 -20	1
SPB20-16PS003	102 -18	REF
	107 -12	1
	107 -18	1
SPB20-16PSW003	102 -12	REF
	107 -10	1
SPB20-39PS003	107 -14	1
	107 -19	1
SPB20-41PS003	126 -48	1
SPB22-21PS003	102 -17	REF
	107 -13	1
	107 -15	1
	107 -17	1
SPB22-21PSW003	107 - 8	1
SPB24-61PS003	126 -46	1
SPH4-10C-1	64 - 2	19
SPH4-10C-7	77 -24	2
SS48140	126 -	1
SS48152K22	126 -	1
SS48152K2215	0 -28	5
	112 -41	1
	129 -49A	1
SS50726K2215	110 -54	2
SS51071	130 -20B	1
ST106N	79 - 3	REF
	81 -22	REF
	102 -10	REF
	103 -48	REF
	130A- 1	1
ST4AR	63 - 5C	1
	64 - 3	1
	64 - 6	1
	64 - 9	1
	64 -12	1
	64 -15	1
	64 -18	1
	64 -21	1
	64 -24	1
	64 -27	1

PART NUMBER	FIG AND INDEX NO	QTY /AC
	66 -46	1
	66 -50	1
	69 -18	2
	77 -40	1
	77A- 5	1
	77A-12	1
ST4BR	69 -21	4
ST4BR3	67 -19	1
SX560	110 -	3
T1-1131	107 -58	3
TBF20-18PS	107 -11	1
TDH8070-2502	110 -63	1
TR3	135B-14	4
TRE3	135B-12	4
TS1843B/APX	123 -11	1
TY13	125 - 2B	1
U92A/U	134A-	2
UG1185U	120 -36	1
UG1186U	120 -37	1
UG212C/U	125 -22A	2
UG27C/U	125 -16B	4
UG27D/U	125 -	1
UG492D/U	124 - 3	4
UG88D/U	123 -41	REF
	125 -25A	4
VP1073-4-14	52 -10	4
W805824-5	135 -12	2
W805829-5	135 -	2
W805829-7	135 -	2
W805829-802	134A- 1	REF
	135 -	2
W805829-9	135 -	AR
W805832	134A-10	REF
W805832-814	135 -	2
	135A-	REF
W805835-205	135 -40	2
W805835-5	135 -44	2
W805835-6	135 -	2
W805835-7	135 -50	4
W805835-810	135 -	2
W805835-9	135 -51	4
W805836-5	135B-22	8
W805836-806	135 -	REF
	135B-	NP
W805838-810	135 -	2
W805839-201	135 - 1	2
W805839-401	135 -	2
W805842-3	135 -16	2
W805843-804	135 -	REF
	135A-	NP
W805849-1	135B-	4
W805859-4	135 - 7	2
W805861-3	135 - 2	2
W805861-5	135 -15	2
W805864-2	135A-	2
	135A-	4
W805865-201	135 -65	2
W805865-401	135 -	2
W805868-2	135A-	2
W805873-2	135A-	4
W805874-2	135A-	8
	135A-	4
W805875-3	135A- 5	2
W805877-5	135B-29	4
W805878-3	135 -48	2
W805879-3	135B-24	4
W805882-3	135 -63	16
W805884-3	135 -62	16
W805888-3	135 - 3	2
W805893-3	135 -23	2
W805915-3	135 -43	2
W805918-401	135B-33	2
W805918-402	135B-	2
W805923-800	135B-30	2

PART NUMBER	FIG AND INDEX NO	QTY /AC	PART NUMBER	FIG AND INDEX NO	QTY /AC	PART NUMBER	FIG AND INDEX NO	QTY /AC
W805923-801	135B-	2	W809084-3	134A-12	2			
W805924-401	135B-	2	WP14PMA	120 -	1			
W805925-3	135B- 1	2	WP14SRA	120 -	1			
W805925-401	135B-	2	WP20SM	128 -	1			
W805926-401	135B-20	2	WWT700-6	101 -	2			
W805927-2	135A-	4	X21 (.0980 ID)	140 -	1			
W805928-3	135B-16	2	X21 (1/16 ID)	140 -	1			
W805929-3	135B-27	12	X21 (3/32 ID)	140 -	1			
W805930-3	135B- 3	2	X22 (3/16 ID)	140 -	1			
W805931-3	135B- 9	4	X611A	142 -28	1			
W805932-3	135B-11	8	XB10224K1105	134 -	8			
W805933-800	135B- 6	2		134 -10B	40			
W805933-801	135B- 7	2		134 -	9			
W805936-3	135B-31	2	XX10129-A8-002	0 - 9	11			
W805936-4	135B-	2	XX10129A8-002	134 -	9			
W805938-401	135B- 4	2	XX10129A8-777	134 -	8			
W805942-3	135B-19	2		134 -10A	40			
W805943-3	135B-35	4	XX10376K1105	134 -21	42			
W805946-3	135B-25	4	XX16205K1105	23 -51	8			
W805946-5	135B-26	4	XX16362-0808K110	23 -54	8			
W805947-401	135 -41	2	XX51362	46 - 9	8			
W805947-402	135 -42	2	Y-D4N	128 -17	1			
W805949-3	135B-39	4	YBM2CL	118 -	2			
W805950-3	135 -68	2	YD4N	107 -66	1			
W805950-4	135 -67	2	YE1620	111 -	12			
W805951-10	135B-	2	Z1200-048	52 - 3A	2			
W805951-800	135B-45	4	Z2291W	129 -24	1			
W805952-3	135B-	2						
W805952-401	135B-49	2						
W805952-5	135B-	2						
W805952-6	135B-	2						
W805953-3	135B-37	8						
W805955-5	135B-23	4						
W805956-3	135B-47	2						
W805958-3	135B-36	4						
W805959-2	135A-	2						
W805960-2	135A-	2						
W805961-2	135A-	2						
W805962-2	135A-	4						
	135A-	4						
W805963-2	135A-	2						
	135A-	2						
	135A-	2						
W805964-2	135A-	2						
W805966-2	135A-	4						
	135A-	8						
	135A-	4						
	135A-	4						
	135A-	4						
	135A-	4						
W805968-12	135B-53	2						
W805971-2	135A-	4						
W805972-2	135A-	2						
W805974-3	135 -61	2						
W809058-3	135 -29	2						
W809058-4	135 -	2						
W809059-3	135 -26	2						
W809060-3	135 -25	2						
W809061-401	135 -33	2						
W809062-3	135 -34	2						
W809063-3	135 -57	2						
W809064-3	135 -56	2						
W809065-401	135 -	2						
W809069-3	135 -49	2						
W809072-401	135 -21	2						
W809073-800	135 -	2						
W809074-401	135A- 1	2						
W809075-5	135 -18	2						
W809076-3	135 -28	2						
W809077-3	135 - 9	2						
W809078-3	135 -59	2						
W809079-3	135 -38	4						
W809081-800	134A-19	2						
W809083-800	135A- 2	2						