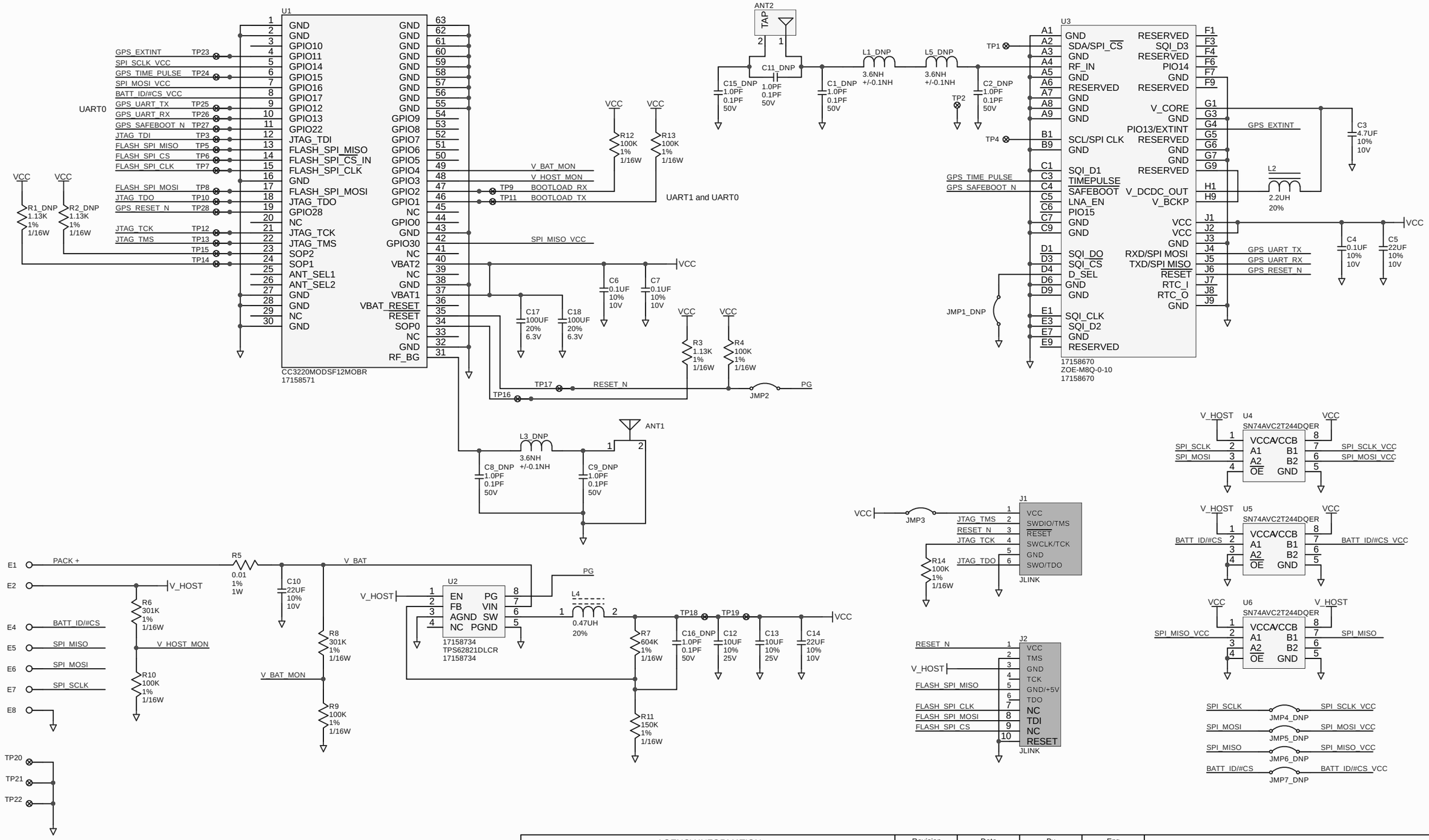

AGENCY INFORMATION			Revision	Date	By	Eng
Trace Specifications Inch [mm] Unless otherwise specified Min Trace Width		**WARNING:** Any change(s) in the Intrinsically Safe circuitry or components may result in an unsafe condition	0	06/06/2017	SL	JD
NET	MIN TRACK WIDTH		1	03/26/2018	SL	JD
		Do not change this drawing without the following agency approvals:				

INDUSTRIAL SCIENTIFIC CORPORATION

Title: *SCHM: PCBA,WIFI,BATTERY,VENTIS*

Dwg. No. *1715B8130-400.*

Sheet *1* of *1*

Origin: *ISCA*

Size: **B**