Spring 2026

46705 Power Grid Analysis

Assignment 2: Fault Analysis

Issued: 17/03/2026

Submission date: 10/04/2026

In this assignment you will work in small groups to complete a Python code similar to Exercise 1 and Assignment I in order to conduct fault analysis of a transmission system. The purpose of the assignment is to:

- Apply the theory of symmetrical components to model generators, transformers, and transmission lines under fault conditions, including the construction of positive, negative, and zero sequence networks.
- Perform classical fault calculations by hand to compute subtransient fault currents and voltages for different fault types and to reason about their physical implications.
- Prepare consistent per-unit sequence models of a power system and reduce them to Thevenin equivalents as seen from a fault location.
- Analyse and interpret the impact of faults on currents and voltages throughout the system, with particular emphasis on worst-case conditions relevant for protection and equipment ratings.
- Develop and complete a Python-based fault analysis program capable of systematically computing fault currents and bus voltages for different fault types and locations.
- Validate numerical fault analysis results by comparison with analytical calculations and assess the validity of common fault analysis assumptions.
- Investigate the influence of modelling choices such as fault impedance, pre-fault voltage, and grounding of system components on fault severity.
- Communicate technical methods, assumptions, results, and interpretations in a professional engineering report using appropriate equations, figures, and terminology.

Test System

In this case study you will analyse the same transmission system as in Assignment I, and described below. Please note that additional parameters have been added.

Table 1: System parameters and limits.

Generator Ratings
G_1: 100 MVA, 13.8 kV, $x'' = 0.12$ p.u., $x_2 = 0.14$ p.u., $x_0 = 0.05$ p.u., $-43.5\,\text{MVAr} \leq Q_{G1} \leq 43.5\,\text{MVAr}$
G_2: 200 MVA, 15 kV, $x'' = 0.12$ p.u., $x_2 = 0.14$ p.u., $x_0 = 0.05$ p.u., $-87\,\text{MVAr} \leq Q_{G2} \leq 87\,\text{MVAr}$
Generators are Y-connected with their neutrals solidly grounded.
Transformer Ratings
T_1: 100 MVA, 13.8 kVΔ/ 230 kVY, $x = 0.1$ p.u.
T_2: 200 MVA, 15 kVΔ/230 kVY, $x = 0.1$ p.u.
Transformer neutrals are solidly grounded.
Transmission Line Ratings
All lines: 230 kV, $z_1' = (0.08 + j0.5)\Omega\,\text{km}^{-1}$, $y_1' = j3.3\mu\text{S}\,\text{km}^{-1}$
$\underline{z}_0' = (0.2 + j1.5)\Omega\,\text{km}^{-1}$ Maximum Loading: 400 MVA
Line lengths ℓ are provided in the single line diagram. x corresponds to the number of your group.
Power Flow Data
Bus 1: Swing bus $V_1 = 13.8\,\text{kV}\angle 0°$
Bus 2,3,4,5,6: Load buses
Bus 7: Constant voltage magnitude bus
$V_7 = 15\,\text{kV}$
Generators G_1 and G_2 share active power according to the ratio of their nominal capacities.
Voltage limits: ± 0.05 p.u.
System Base Quantities
$S_{base} = 100\,\text{MVA}$ (Three-phase)
$V_{base} = 13.8\,\text{kV}$ (line-to-line) in the zone of G1

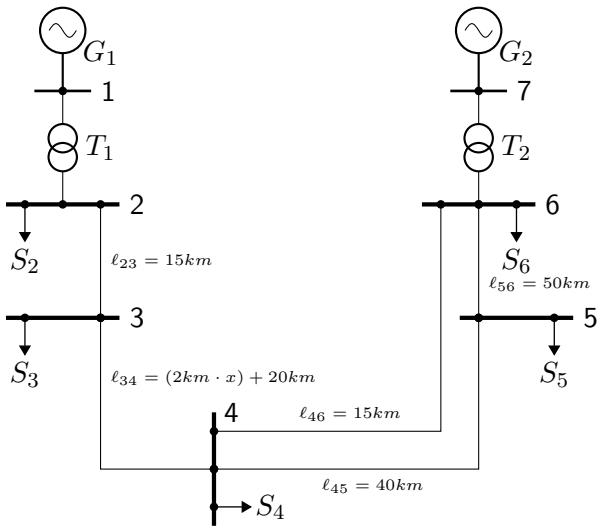

Figure 1: Single line diagram of the three phase transmission system.

Table 2: Operating points.

High Loading Point (Operating Point A)
$S^a = S_2^a = S_3^a = S_4^a = S_5^a = S_6^a = 50\,\text{MW} + \text{j}\,30\,\text{MVAr}$
Low Loading Condition (Operating Point B)
At every node, the apparent power for condition B is calculated as $S^b = c \cdot S^a$ with : $c = [0.2 + (x-1) \cdot 0.01]$ and x is your group number.

Tasks

Part A: Classic Calculation of Fault Currents

In this part of the assignment you will perform classic calculations by hand to compute the subtransient fault currents and voltages in the provided test system for a bolted three-phase to ground fault and a bolted single-line to ground fault. Whenever you draw circuit diagrams please name the components by symbols rather than parameter values and make sure that each symbol is properly defined.

Note: Whenever we ask to compute the subtransient fault current, we ask to compute the rms-value of the subtransient fault current that occurs for the worst-case fault angle.

1. **System Transformation**
   At first, you will transform the system to the per unit system in symmetrical components. Conduct the following steps to transform the system.

   (a) Which is the correct zero sequence diagram for both of the transformers in the test system? Please explain how you arrive at the diagram.

   (b) Draw the per unit sequence networks for the test system detailed in Figure 1, name all circuit components with symbols, provide their definition and provide all component parameters in the system per unit quantities.

2. **Fault Study Preparation**
   We want to study the system for the occurrence of different faults at Bus 5. Make the following assumptions:

   - Neglect pre-fault currents and all losses.
   - Pre-fault voltage $= 1\,\mathrm{p.u.}$
   - You may neglect Δ-Q phase shifts for all following tasks.

   Reduce the sequence networks to their Thevenin equivalents looking in from the fault location. Present the reduction steps and the sequence diagrams in your report, and include all system parameters. Use symbols rather than parameter values in your diagrams.

3. **Symmetrical Three-Phase Fault**
   A bolted three-phase fault occurs at Bus 5. Complete the following steps to analyse the fault:

   (a) Where in the system do you expect the largest current and voltage deviations? No calculations are necessary for this step. You should apply your knowledge on three-phase short circuits.

   (b) Compute the subtransient fault current and voltages at the fault location for a bolted three-phase fault at bus 5. Provide your solution in sequence and three-phase quantities, in per unit and physical units.

   (c) What is the maximum current amplitude that protection devices in the system must withstand to survive this fault?

   (d) How do you expect the fault current and voltages to change if the short circuit was no longer bolted? No calculations are necessary for this step.

4. **Single Phase to Ground Fault**
   A bolted single phase to ground fault occurs at Bus 5 and connects Phase R to the ground. We observe the same pre-fault conditions as in the previous question. The same assumptions apply. Complete the following tasks to analyse the system.

   (a) Draw the sequence network during the fault condition. Label all circuit elements and include their parameters.

(b) Compute the subtransient fault current and voltage in SI units in both sequence and phase domain at the fault location for the bolted single-line to ground fault at Bus 5.

(c) Compare the single-phase to ground fault results to your results for the three-phase fault. What differences and similarities do you observe? How can these be explained?

(d) How do you expect the fault current and voltages to change if the short circuit was no longer bolted? No calculations are necessary for this step.

Part B: Develop Python Program for Fault Analysis

In this part, you will complete a Python script, similar to the one developed in Exercise 1 and provided for Assignment I, to conduct systematic fault analysis of generic power systems. During development, you can use the provided test system data to complete and test the code. Once it is complete, you will use your results from Part A to validate the correctness of the developed code.

The main script for the fault analysis program is provided in Code 1 and contained in the file "*main4Fa.py*" of the provided documents. The functions colored in red denote functions and *.py files that you have to write or edit in order to complete the assignment. You are provided with a skeleton for each of these functions, but as part of the assignment, you need to complete several functions. The locations where you are expected to add your own code are highlighted as `"""insert your code"""` [1].

```python
import FaultAnalysis_46705 as fa    # import Fault Analysis functions
import LoadNetworkData4fa as lnd4fa # load the network data to global variables
# Load the network data
filename = "./TestSystem4FA.txt"
lnd4fa.LoadNetworkData4FA(filename)
# Carry out the fault analysis ...
FaultBus = 3
# FaultType: 0 = 3-phase balanced fault; 1 = Single Line-to-Ground fault;
#            2 = Line-to-Line fault;     3 = Double Line-to-Ground fault.
FaultType = 1
FaultImpedance = 0 # (in pu)
PrefaultVoltage = 1.000 # (in pu)
# Iph: phase current array (0: phase R; 1: phase S; 2: phase T).
# Vph_mat: phase line-to-ground voltages (rows: busses; columns: phases R, S, T).
Iph,Vph_mat = fa.FaultAnalysis(lnd4fa.Zbus0,lnd4fa.Zbus1,lnd4fa.Zbus2,lnd4fa.bus_to_ind,
                               FaultBus,FaultType,FaultImpedance,PrefaultVoltage)
# Display results
fa.DisplayFaultAnalysisResults(Iph,Vph_mat,FaultBus,FaultType,FaultImpedance,PrefaultVoltage)
print('\n-------------End of Fault Analysis-----------\n')
```

Code 1: A Python script that carries out a fault analysis for a single line to ground fault at Bus 3 in a test system. In this assignment, you need to complete the functions colored in red.

The functions that you have to complete are:

- The function `LoadNetworkData4FA()` (to be stored in LoadNetworkData4FA.py) which reads all the necessary information about the network and computes the Zbus matrices.
- The function `FaultAnalysis()` (to be stored in FaultAnalysis_46705.py) which is the essential part of the program and computes the fault current and voltages.
- The function `DisplayFaultAnalysisResults()` (to be stored in FaultAnalysis_4607.py) that displays the results of the fault analysis.

The following tasks guide you through the construction of each of these functions and scripts.

5. Construct the LoadNetworkData4FA() Function

Complete the `LoadNetworkData4FA()` function provided in the *LoadNetworkData4FA.py*. The function should automatically create the positive, negative and zero sequence admittance matrices (Ybus1, Ybus2, Ybus0) of a given electrical network and compute the sequence bus

[1] *Disclaimer:* There does not exist a universal standard for naming the three phases. This is due to historical reasons. The convention adopted during the lectures corresponds to the European nomenclature, whereas other regions use A-B-C, or L1-L2-L3. The code follows the North American convention A-B-C.

impedance matrices (Zbus1, Zbus2, Zbus0). Generally, data is handled similarly as for the power flow code from Exercise 1 and Assignment I. Complete the code such that it computes the sequence admittance matrices and the bus impedances matrices per sequence. Code 2 provides a skeleton of the function.

In your implementation, you should consider the assumptions made for typical fault analysis, e.g. ignore shunts, Δ-Y phase shifts, etc. Report your assumptions, and which equations were used to construct the matrices.

```python
import numpy as np
import ReadNetworkData as rd4fa

def LoadNetworkData4FA(filename):
    global Ybus,Sbus,V0,buscode,pq_index,pv_index,Y_fr,Y_to,br_f,br_t,br_Y,S_LD,bus_kv, \
           ind_to_bus,bus_to_ind,MVA_base,bus_labels,Ybus0,Ybus2,Zbus0,Zbus1,Zbus2
    #read in the data from the file...
    bus_data,load_data,gen_data,line_data,tran_data,mva_base,bus_to_ind,ind_to_bus = \
    rd4fa.read_network_data_from_file(filename)

    MVA_base = mva_base
    N = len(bus_data) # Number of buses

    Ybus = np.zeros((N,N),dtype=complex)
    Ybus2 = np.zeros((N,N),dtype=complex)
    Ybus0 = np.zeros((N,N),dtype=complex)

    # Add line admittances to the Ybus
    for line in line_data:
        """insert your code"""
    # Add the transformer model to Ybus
    #bus_fr, bus_to, id_, R,X,n,ang1,fr_co, to_co, X2, X0
    for line in tran_data:
         """insert your code"""
    # create the Sbus, V and other bus related arrays
    V0 = np.ones(N,dtype=complex) # the inital guess for the bus voltages
    #Get the bus data
    bus_kv = []
    buscode = []
    bus_labels = []
    for line in bus_data:
        """insert your code"""
    for line in load_data:
        """insert your code"""
    for line in gen_data:
        """insert your code"""

    Zbus0 = np.linalg.inv(Ybus0)
    Zbus1 = np.linalg.inv(Ybus)
    Zbus2 = np.linalg.inv(Ybus2)

    return
```

Code 2: Skeleton for the `LoadNetworkData4FA` function.

6. Construct the FaultAnalysis() Function

Move on constructing the `FaultAnalysis` function, by completing the four functions in the provided *FaultAnalysis_46705.py* file. Code 3 provides a skeleton of the final `FaultAnalysis()` function.

```python
import numpy as np
def FaultAnalysis(Zbus0,Zbus1,Zbus2,bus_to_ind,fault_bus,fault_type,Zf,Vf):

    # calculate sequence fault currents
    Iseq = Calculate_Sequence_Fault_Currents(Zbus0,Zbus1,Zbus2,bus_to_ind,fault_bus,
    ↪  fault_type,Zf,Vf)

    # calculate sequence fault voltages
    Vseq_mat = Calculate_Sequence_Fault_Voltages(Zbus0,Zbus1,Zbus2,bus_to_ind,
    ↪  fault_bus,Vf,Iseq)

    # convert sequence currents to phase (fault) currents
    Iph =  Convert_Sequence2Phase_Currents(Iseq)

    # convert sequence voltages to phase line-to-ground (fault) voltages
    Vph_mat =  Convert_Sequence2Phase_Voltages(Vseq_mat)
    return Iph, Vph_mat
```

Code 3: Skeleton for the `FaultAnalysis()` function provided in *FaultAnalysis_46705.py* file. The functions highlighted in red need to be completed.

The input to the `FaultAnalysis()` function are:

- The bus impedance matrices `Zbus0` for the zero, `Zbus1` for the positive, and `Zbus2` for the negative sequence,
- a mapping from bus numbers to the corresponding indices `bus_to_ind`,
- and several fault characteristics including the fault bus in `fault_bus`, a scalar providing the type of fault in `fault_type`, the fault impedance `Zf` and the pre-fault voltage `Vf`.

The function returns

- the phase fault currents `Iph` as an array that stores phase R, S and T currents. Note that `Iph[0]` contains the R phase, `Iph[1]` the S phase and `Iph[2]` the T phase current.
- the fault line-to-ground voltages `Vph_mat` in an Nx3 matrix that stores the voltages at each bus in rows and phase R,S,T voltages in columns. For example element
  - `Vph_mat[0][0]` contains the line-to-ground voltage of phase R (first column) at bus 1 (first row),
  - `Vph_mat[1][2]` contains the line-to-ground voltage of phase T (third column) at bus 2 (second row).

Skeletons for each of the functions that need to be completed for the fault calculation are contained in the *FaultAnalysis_46705.py* file, and the locations where you need to enter your code are marked accordingly. Complete the following steps to construct all required functions.

(a) Complete the function `Calculate_Sequence_Fault_Currents()`, which calculates the sequence fault currents and stores them in the array `Iseq`, where element `Iseq[0]` contains the zero sequence current, `Iseq[1]` contains the positive sequence current, and `Iseq[2]`

contains the negative sequence current. Make sure to handle all different fault types. Report your process and applied equations.

(b) Complete the function `Calculate_Sequence_Fault_Voltages()` that calculates the sequence fault voltages and stores them in a Nx3 matrix `Vseq_mat`, where N is the number of buses. The first column should contain zero sequence, second column positive sequence, and third column negative sequence voltages. Report your process and applied equations.

(c) Complete the `Convert_Sequence2Phase_Currents()` function which converts the sequence current array `Iseq` to the phase current array `Iph`. Report your process and applied equations.

(d) Complete the `Convert_Sequence2Phase_Voltages()` function which converts the voltage matrix `Vseq_mat` to the phase line-to-ground voltage matrix `Vph_mat`. Report your process and applied equations.

7. Construct the DisplayFaultAnalysisResults() Function

The final function to complete is the `DisplayFaultAnalysisResults()` function from Code 1, that should also be stored in the file *FaultAnalysis_46705.py*. It should display the phase fault currents and phase line-to-ground voltages (at all buses) for a given fault. An example of the desired printout is provided in Figure 2.

```
==============================================================
|                   Fault Analysis Results                   |
==============================================================
| Single Line-to-Ground Fault at Bus 3, phase a.             |
| Prefault Voltage: Vf = 1.000  (pu)                         |
| Fault Impedance:  Zf = 0.000  (pu)                         |
==============================================================
| Phase Currents ---------------------------------------------|
| --------------                                             |
|      ---- Phase a ----| ---- Phase b ----| ---- Phase c ----|
|      -----------------|-----------------|-----------------|
|       Mag(pu) Ang(deg)|  Mag(pu) Ang(deg)|  Mag(pu) Ang(deg)|
|        5.466   -90.00 |   0.000  -90.00  |   0.000  -90.00  |
==============================================================
| Phase Line-to-Ground Voltages ------------------------------|
| -----------------------------                              |
|    | ---- Phase a ----| ---- Phase b ----| ---- Phase c ----|
|Bus|-----------------|-----------------|-----------------|
|    |  Mag(pu) Ang(deg)|  Mag(pu) Ang(deg)|  Mag(pu) Ang(deg)|
|---| -------- ------- | -------- ------- | -------- ------- |
| 1 |   0.427     0.00 |  0.950  -114.26  |   0.950  114.26  |
| 2 |   0.484     0.00 |  0.928  -110.99  |   0.928  110.99  |
| 3 |   0.000   180.00 |  1.022  -122.11  |   1.022  122.11  |
| 4 |   0.549     0.00 |  0.956  -115.05  |   0.956  115.05  |
| 5 |   0.636     0.00 |  0.922  -110.15  |   0.922  110.15  |
==============================================================
```

Figure 2: Example of the `DisplayFaultAnalysisResults()` function when computing a Line-to-Ground Fault at Bus 3 in phase a (R) for the provided test system in *TestSystem4FA.txt*.

8. Code Validation

To ensure that the developed code works as expected, we are now running fault analysis for the test system studied in Part A. The goal is to repeat the fault calculations performed for the three-phase-to-ground fault in Task 3 and the single-line-to-ground fault in Task 4.

(a) Prepare all input files for the test case detailed in Figure 1, Table 1 and 2 to conduct fault analysis with your developed python code. Include the input files in your upload.

(b) Check if the results from your hand calculations for both fault types match the python code outputs. Report the outcomes.

Part C: Study the Test Case with Python Program

In this final part of the assignment, you will conduct systematic fault analysis of the provided test system and test some of the assumptions that we typically make for fault analysis.

9. Three-Phase to Ground Faults

Which fault is the worst case three-phase to ground fault in the system? Run the developed program to compute the subtransient fault current for a bolted three phase to ground fault at all buses in the system. Also, compute the bus voltages during the faults. Assume $1\,\mathrm{p.u.}$ prefault voltage. Neglect prefault load currents and all losses.

10. Comparing Different Fault Types

We compare the severity of different bolted faults at bus 4 in the system:

- single line to ground fault in phase R
- line to line fault between phases S and T
- double line to ground fault in phases S and T
- three-phase to ground fault

Conduct the following tasks to study the impact of the different faults on the fault severity.

(a) Use the fault analysis program to analyse the four types of fault above at bus 4. Report the subtransient fault current and voltages in the entire system.

(b) Analyse your results and compare the severity of the different faults. From your fault analysis, which fault is the worst-case fault that can occur in the system, i.e. which one yields the highest short circuit currents?

(c) From your fault analysis, which fault do you suspect to be the hardest one to detect in the system?

11. Impact of the Fault Impedance

Most faults are subject to a fault impedance. Research the literature for reasonable fault reactances and resistances for different fault types and report your resources. Study the impact of the fault resistance and inductance on the fault current and fault voltage for all different fault types at bus 4. Which general observation can you make? How does the fault impedance impact the outcome?

12. Impact of the Pre-Fault Voltage

Besides the fault impedance, depending on the pre-fault loading conditions, the pre-fault voltage will be different. Study the impact of the pre-fault voltage on the subtransient fault current and fault voltages at all buses in the system. Assume again that all faults are bolted faults with negligible fault impedance $\underline{z}_f = 0$, and that pre-fault voltages are within the voltage limits of $\pm 0.05\,\mathrm{p.u.}$.

13. Impact of Grounding of System Components

So far, all neutral points in our system were grounded. Study the impact of the grounding decision on subtransient fault current and voltage. For the worst case three-phase-to-ground fault, compare and study the impact of the following neutral point handling strategies on subtransient fault current and voltage:

- all neutral points are solidly grounded
- all neutral points are grounded with a small resistance within $r_g = 0.01\,\mathrm{p.u.}$ to $0.1\,\mathrm{p.u.}$ on the components unit base.
- all neutral points are grounded with a small inductive reactance within $x_g = 0.01\,\mathrm{p.u.}$ to $0.1\,\mathrm{p.u.}$ on the components unit base.

- transformers are replaced by Yy transformers, whose neutral points are solidly grounded,
- transformers are replaced by $\Delta - \Delta$ transformers.

How should we handle neutral points to reduce three-phase fault currents? Which transformer connections provide the smallest fault currents? What impact do grounding decisions have on system voltages during a fault?

14. Pre-Fault Loading

We typically make the assumption that the pre-fault loading is negligible and all buses in the system are subject to the same pre-fault voltage. How would you need to change your fault current computation with the developed program if we wanted to consider the pre-fault loading condition? No simulations are required for this step. Please apply and explain with the theory from class. How much would you expect the worst-case three-phase short circuit fault to change?

15. Reflections and Discussion

What have you learned in this assignment for the operation of real power systems where different faults can occur at any time? What are your recommendations regarding fault calculation procedures? What are your recommendations regarding the grounding of neutral points? Formulate guidelines for transmission system operators.

Guidelines for Report Writing

When writing the report for the assignment, the below listed points should be followed:

- The report must start with a self-evaluation section, where the authors state whether the report represents an even contribution from all group members or whether some participants were not effectively contributing to the report. All group members must sign the self-evaluation section.
- The report must contain a section informing about the AI policy of the group, and the usage of AI in completing the assignment and the report. All group members must sign the declaration of the usage of AI.
- The front page of the report should contain your names and student numbers.
- Your Python code used for the solution of this assignment has to be included in appendix.
- The report shall contain the answer to each of the questions. The answers shall be clearly separated from each other and come in the same order as the questions in the assignment. It is not necessary to repeat the text from the assignment in your report.
- When answering the questions, both the results as well as an explanation on how you came up with your results should be included in the answer.
- Always when asked to provide plots of something (time responses, curves etc.) you must provide your interpretation of the figure.
- Make sure that the assignment's learning objectives are reflected in your report.
- When your reports are evaluated, points are awarded for the general setup of the report. We are looking for a professional look of the report, where among others the following is considered:
  - Readability (appropriate font sizes, margins etc.) and consistence in styles applied (same look for body text, headings, captions etc. throughout the report).
  - Presentation of equations should be of an appropriate quality (do not copy/paste equations as screenshot pictures from the lecture handouts).
  - Plots and figures should be of good quality (no fuzzy looking screenshots in the report). You can always ask the teachers how you can export figures of good quality in Python/-Matlab.
  - Figures and tables must have a label and caption (e.g. Figure 1: plot of active power in respect to ....).
  - If you are citing external material, you need to include a properly set-up reference list (you can use any citation style you prefer).
  - Does the report contain a conclusion section?
- You will also be awarded points for the general formulation of the report where focus is on:
  - The flow in the text when explaining how you came up with your answers and correct use of relevant terminology.
  - Interpretation and reflection of results when appropriate.
  - Grammar and spelling.

Guidelines for the Upload of the Report and the Python Code

The report submission is carried out on DTU-LEARN where the following shall be uploaded:

- PDF version of your report, with your Python code in appendix.
- Your Python code used for solving the assignment (the *.py). The code shall include your comments where you explain the meaning behind the code.