更 改 记 录 REVISION RECORD					
标记 MARK	数量 QUANTITY	更 改 依 据 REVISION BASIS	更改人 REVISER	批准 AUTHORIZE	日期 DATE

会签
联系人
固话
手机
校对
固话
手机

GSI 广船国际	广 船 国 际 有 限 公 司 GUANGZHOU SHIPYARD INTERNATIONAL COMPANY LIMITED			船号 HULL NO. 21110001	
图 号 YARD REF. NO. K5452531		MSC/GNV 1500客/3100米车道客滚船 MSC/GNV 1500P/3100LM Ropax		第 1 页 PAGE NO. 共 8 页 TOTAL	
设绘 DESIGNED		装载计算机 Cable Diagram for Loading Computer		简易图号 DWG. NO. E-028	
校对 CHECKED					
审核 APP'VED1					
标检 CERTIFIED					
图纸面积 0.06 m²	审定 APP'VED2	比例 SCALE	材料 MATERIAL	重量 WEIGHT(kg)	修改版本 REV. 0
	批准 AUTHORIZE				

SYMBOL DESCRIPTION OF SYSTEM AND CABLE
系统和电缆的符号说明

1. SYSTEM SYMBOL DESCRIPTION
系统符号说明

P- :	ELECTRIC POWER SYSTEM 电力系统
L- :	ELECTRIC LIGHTING SYSTEM 照明系统
C- :	NAVIGATION AND INTERIOR COMMUNICATION SYSTEM 导航和船内通信系统
	FIRE ALARM SYSTEM 火警系统
K- :	ENGINE CONTROL AND INSTRUMENTATION SYSTEM 机舱自动化系统
R- :	RADIO SYSTEM 无线电系统
D- :	AUTOMATIC SYSTEM ON DECK 甲板自动化系统

2. ABBREVIATION OF ELECTRICAL EQUIPMENTS
电气设备代号

MSB : MAIN SWITCHBOARD 主配电板	RC-T : RADIO TABLE 报务台
GSP : GROUP STARTER PANEL 组合起动器	OCP : OVERHEAD CEILING PANEL FOR CONNING POSITION 驾驶室前仪表板
CHP : BATTERY CHARGING & DISCHARGING PANEL 蓄电池充放电板	BWCP : PORT WING CONTROL CONSOLE 左翼控制台
ECC : ENGINE CONTROL CONSOLE 机舱集控台	BWCS : STBD WING CONTROL CONSOLE 右翼控制台
ESB : EMERGENCY SWITCHBOARD 应急配电板	OWCP: OVERHEAD CEILING PANEL FOR BWCP 左翼天花仪表板
BCC : BRIDGE MAIN CONTROL CONSOLE 桥楼控制台	OWCS: OVERHEAD CEILING PANEL FOR BWCS 右翼天花仪表板
BSC : BRIDGE SAFE CONTROL CONSOLE 桥楼安全控制台	SRTPC: SECOND BRIDGE CONTROL CONSOLE 备用桥楼控制台
CT : CHART TABLE 海图桌	

图纸面积
0.06 m^2

3. CABLE TYPE DESCRIPTION
电缆型号说明

	含 义 CONTENT	代 号 SYMBOL	说 明 DESCRIPTION
结构形式 CONSTRUCTION	系列代号 CABLE SERIES	C/CH	C: 船用电力电缆 Marine Power Cable CH: 船用仪表电缆 Marine Instrumentation Cable
	绝缘代号 INSULATION	J	交联聚乙烯 XLPE
	其它结构代号 OTHER CONSTRUCTION	P	绝缘芯线或线对屏蔽 Wire or twised pair with individual
	铠装代号 ARMOUR	8	镀锡铜丝编织 Tinned Copper Wire Braid
	外护套代号 OUTER SHEATH	6	非交联聚烯烃外护套 NOn-Cross-linked polyolefin
规格 SIZE		n	芯线数 No. of Core
		s	导体标称截面 Nominal Conductor Size
燃烧特性 FIRE PERFORMANCE		NSC	耐火、低烟、无卤、低毒 Fire Resistant、Low Smoke, Halogen-free, Low Toxicity
		SC	成束阻燃，低烟、无卤、低毒 Bunched Flame Retardant, Low Smoke, Halogen-free, Low Toxicity

型号/电压等级 TYPE/VOLTAGE	说 明 DESCRIPTION	选用芯数 NO. OF CORE	截 面 SECTION AREA (mm²)
CJ86/NSC nxs 0.6/1kV	交联聚乙烯绝缘、镀锡铜丝编织、非交联聚烯烃护套、低烟无卤阻燃，船用（防火）电力电缆 XLPE Insulation, Tinned Copper wire braided, Polyolefin Outer Sheath,low smoke halogen free flame retardant(Fire Resistant) Marine Power Cable	芯数为: NO.OF CORES: 1,2,3,5,7, 10,12,19,27	1.5~95
CHJ86/SC nx2xs 250V	交联聚乙烯绝缘、镀锡铜丝编织、非交联聚烯烃护套、低烟无卤阻燃，对称式船用通信电缆 XLPE Insulation, Tinned Copper wire braid, Polyolefin Outer Sheath,low smoke halogen free flame retardant Marine symmetrical communication Cable	对数为: NO.OF PAIRS: 1,2,4,7,10, 14,19	0.75,1.5
CHJ86/NSC nx2xs 250V	交联聚乙烯绝缘、镀锡铜丝编织、非交联聚烯烃护套、低烟无卤阻燃，对称式船用防火通信电缆 XLPE Insulation, Tinned Copper wire braid, Polyolefin Outer Sheath,low smoke halogen free flame retardant(Fire Resistant) Marine symmetrical communication Cable	对数为: NO.OF PAIRS: 1,2,4	0.75,1.5
CHJP86/NSC nx2xs 250V	交联聚乙烯绝缘、镀锡铜丝编织、非交联聚烯烃护套、低烟无卤阻燃，对绞单独屏蔽船用（防火）通信电缆 XLPE Insulation, Separately screen ,Tinned Copper wire braid,Polyolefin Outer Sheath,low smoke halogen free flame retardant (Fire Resistant) Marine symmetrical communication Cable	对数为: NO.OF PAIRS: 2,4,7,10	0.75,1.5

图纸面积
0.06 m²

4. CURRENT RATING OF XLPE INSULATED CABLE
交联聚乙烯绝缘电缆电流额定值

AMBIENT TEMPERATURE 45°C, MAXIMUN CONTINUOUS SERVICE RATED TEMPERATURE 90°C
环境温度45°C ，最高连续工作温度 90°C

CONDUCTOR 导体截面积	1 CORE 1 芯	2 CORE 2 芯	3 CORE 3 芯
	CURRENT RATING 额定载流量	CURRENT RATING 额定载流量	CURRENT RATING 额定载流量
mm2	A	A	A
1	18	15	13
1.5	23	20	16
2.5	30	26	21
4	40	34	28
6	52	44	36
10	72	61	50
16	96	82	67
25	127	108	89
35	157	133	110
50	196	167	137
70	242	206	169
95	293	249	205
120	339	288	237

图纸面积
0.06 m^2

5.GENERAL NOTE:
备注

NO. 序号	说 明 DESCRIPTION
1	THE TYPE OF POWER CABLE TO BE CJ86/SC UNLESS OTHERWISE MARKED 除另有标注外,所有电力电缆型号为CJ86/SC.
2	THE TYPE OF PAIR TWISTED CABLE TO BE CHJ86/SC UNLESS OTHERWISE MARKED 除另有标注外,所有对绞电缆型号为CHJ86/SC.
3	CABLES MARKED "*" TO BE INNER WIRING IN CONSOLES 标注 ' * '是台内配线 .
4	CABLES MARKED "**" TO BE SUPPLIED AND CONNECTED WITH EQUIPMENT 标注"**"电缆为设备随机电缆.
5	CABLES MARKED "xx" WITH CABLE SERIAL NUMBER TO BE SUPPLIED WITH EQUIPMENT AND YARD CONNECTION. 带电缆编号的标注"xx"电缆为设备随机电缆并且由船厂接线.
6	CABLES MARKED "[IS]" FOR INTRINSICALLY SAFE CIRCUIT 电缆编号带标注"[IS]"电缆为本安电路.
7	CABLES MARKED "[AS]" FOR ANALOG SIGNAL CABLE. 电缆编号带标注"[AS]"为模拟量信号电缆.
8	CABLES MARKED "[VF]" FOR VFD TYPE CABLE. 电缆编号带标注"[VF]"为变频电缆.
9	CABLES MARKED "[SR]"REFERRING SAFETY RETURN TO PORT 电缆编号带标注"[SR]"为安全返港电缆.

图纸面积
0.06 m^2

NO. 序号	SYMBOL 代号	DESCRIPTION 设备名称	QTY 数量	TYPE OR SPECIFICATION 型号或规格	REMARK 备注
16					
15					
14					
13					
12	LC-K	LOADING COMPUTER KEYBOARD 装载计算机键盘	2		NAPA
11	LC-M	LOADING COMPUTER MOUSE 装载计算机鼠标	2		NAPA
10	LAN-C	LAN SOCKET 网络插座	2	RJ45	YARD
9	DIS	SUB-DISTRIBUTION CABINET 分机柜	1		SUPPLIED BY Owner 船东提供
8	DC	DATA CENTER CABINET 数据中心柜	1		
7	NWR	POWER SOCKET AC230V AC230V电源插座	2		YARD
6	LC-NWR	POWER SOCKET AC230V AC230V电源插座	4		YARD
5	LC-FW	LOADING COMPUTER FIRE WALL 装载计算机防火墙	2		NAPA
4	LC-PR	LOADING COMPUTER PRINTER 装载计算机打印机	2		NAPA
3					
2	LC-PC	LOADING COMPUTER PC 装载计算机主机	2		NAPA
1	LC-WS LC WORKSTATION	LOADING COMPUTER WORKSTATION 装载计算机工作站	2		NAPA

图纸面积
0.06 m^2

Cargo office desk DK3
货控台

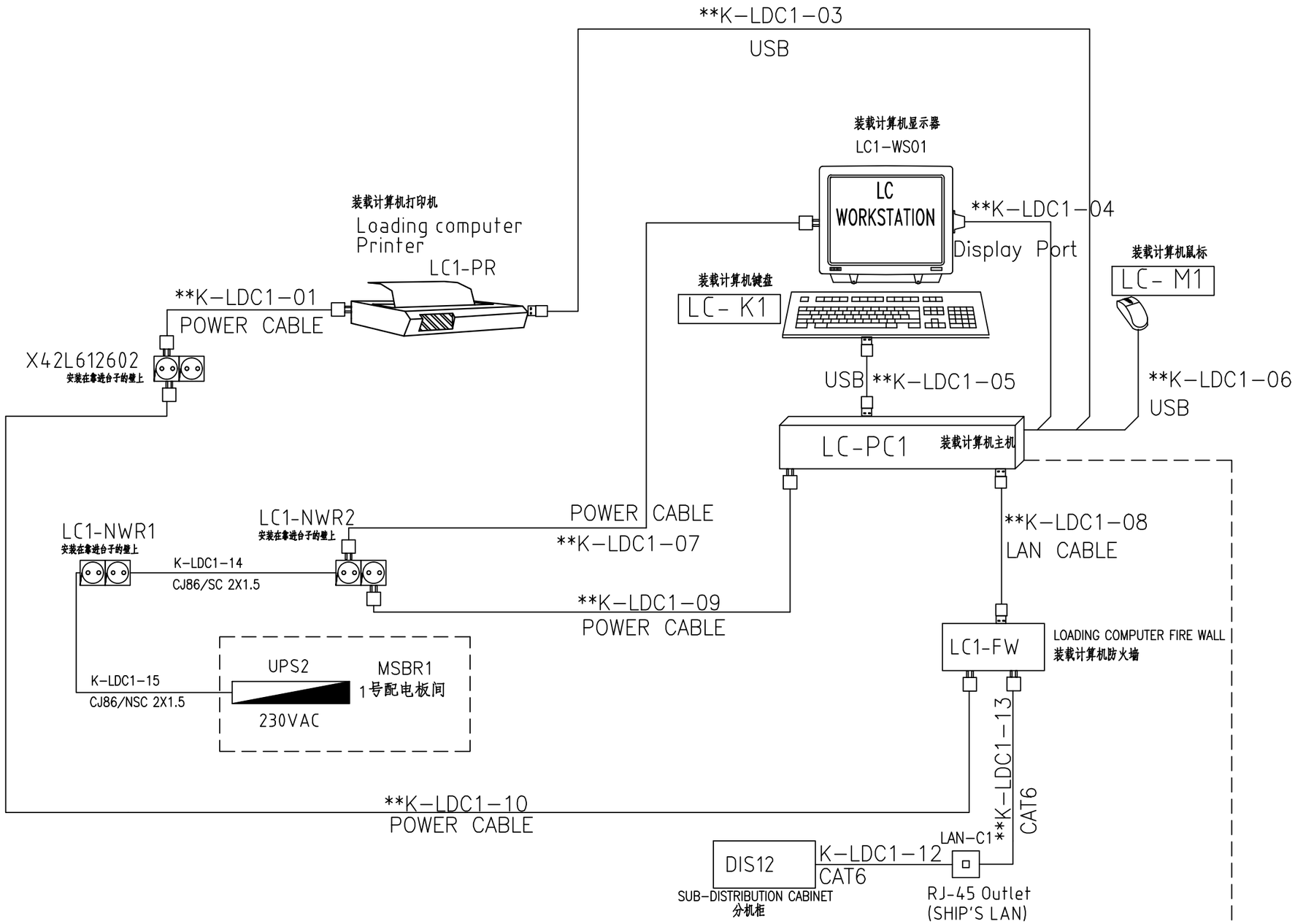

图纸面积
0.12 m²

Wheelhouse Office Area DK10
驾驶室工作区

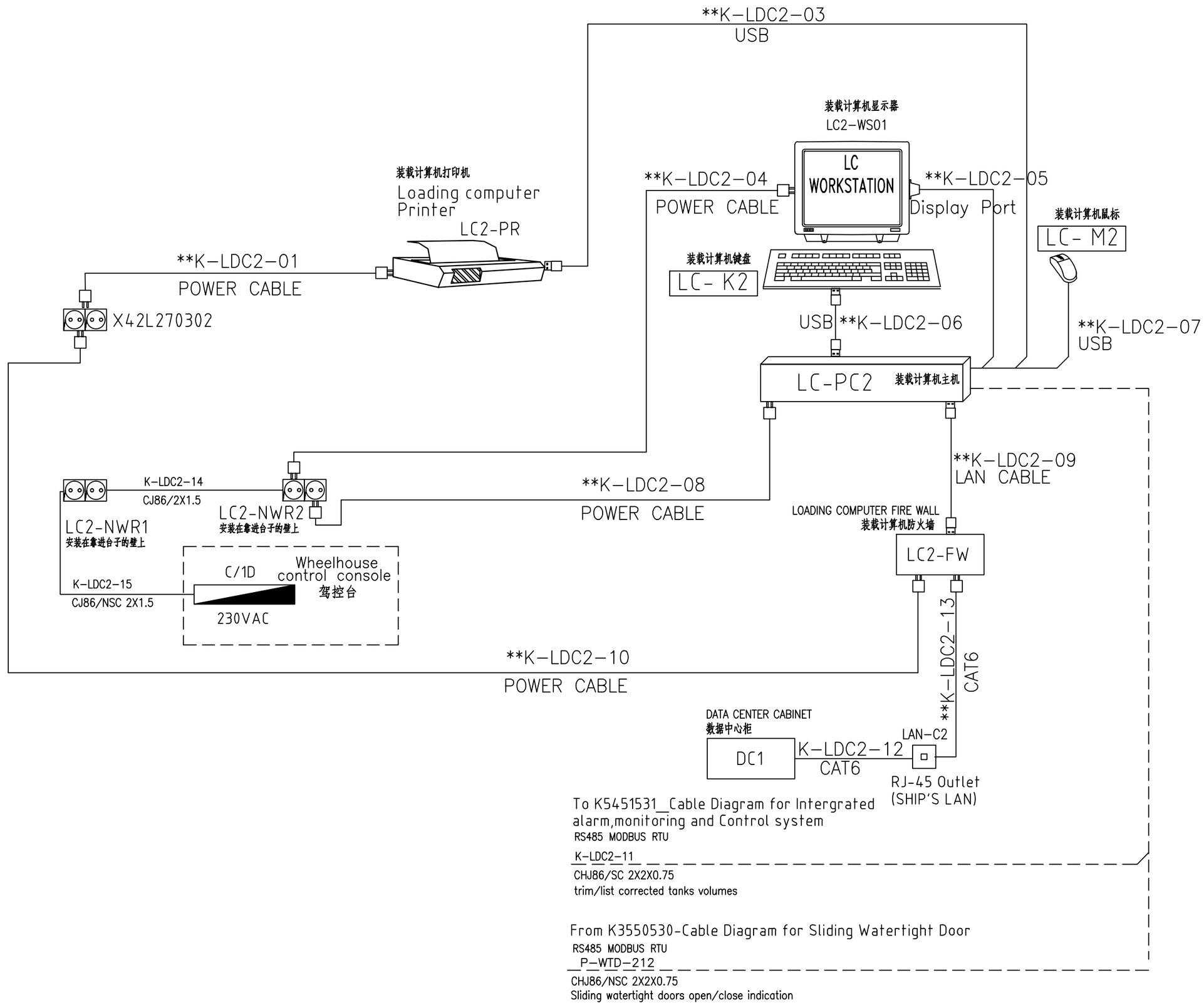

图纸面积
0.12 m²