NOTES

1. Outputs designed to drive high-speed optocoupler 6N137S with 10mA.
2. Maximum 500kHz clock skew (channel to channel) is 150ns, including the optocoupler.
3. Solder 22AWG wire into header through holes. Keep wiring less than 20in for best performance.
4. Plated #4 mounting hole provided to mount as daughter board in future application.
5. Do not exceed 20V at the input. Current draw should be approximately 50mA.

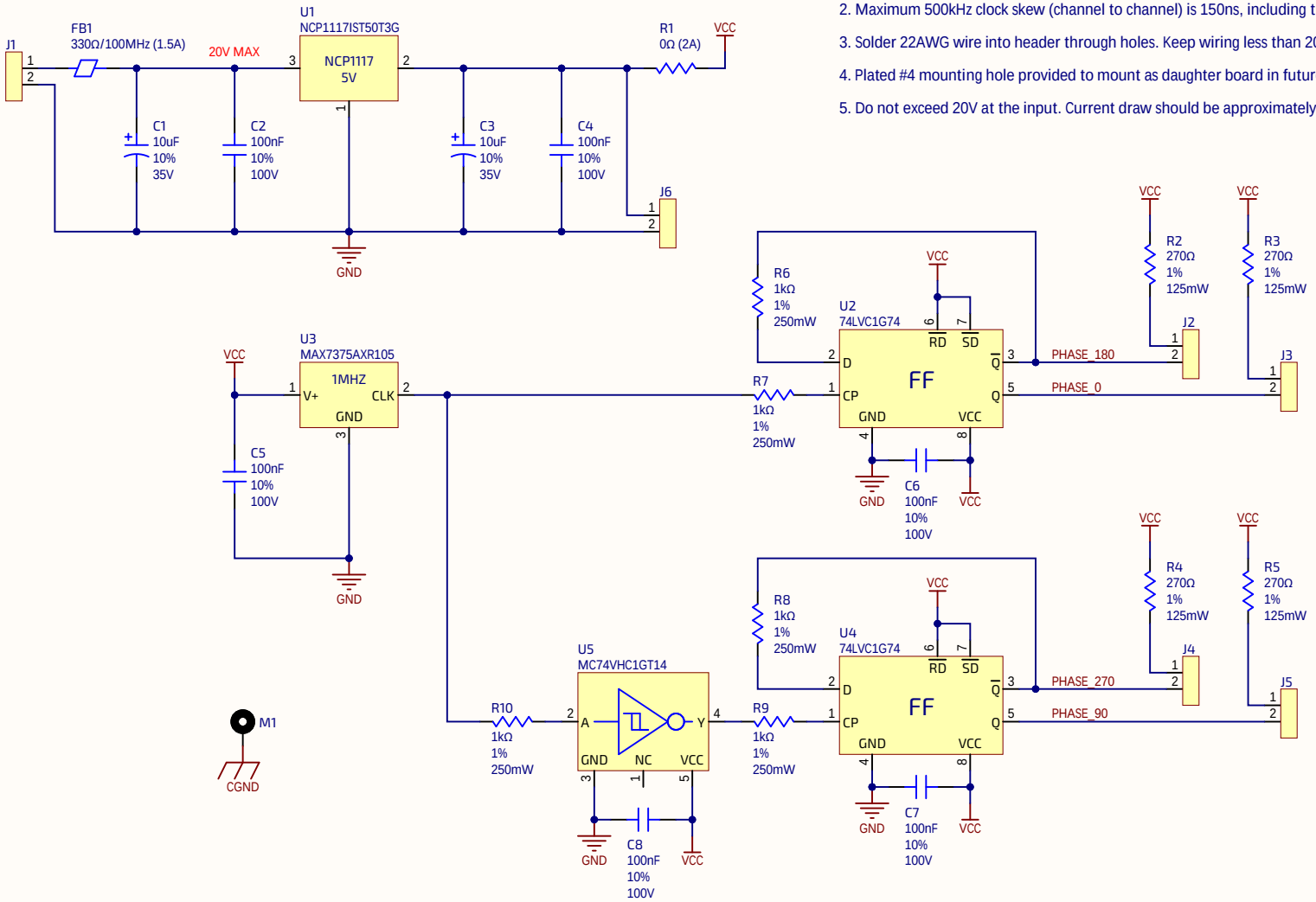

Clock Generator, 500kHz, 4 Phase

Last Modified 1/9/2022

Drawn by Alexander Osborne

Osborne Electrical Engineering

www.osborneee.com

www.github.com/amosborne

www.linkedin.com/in/alexander-m-osborne/