NRF52840 and peripherals

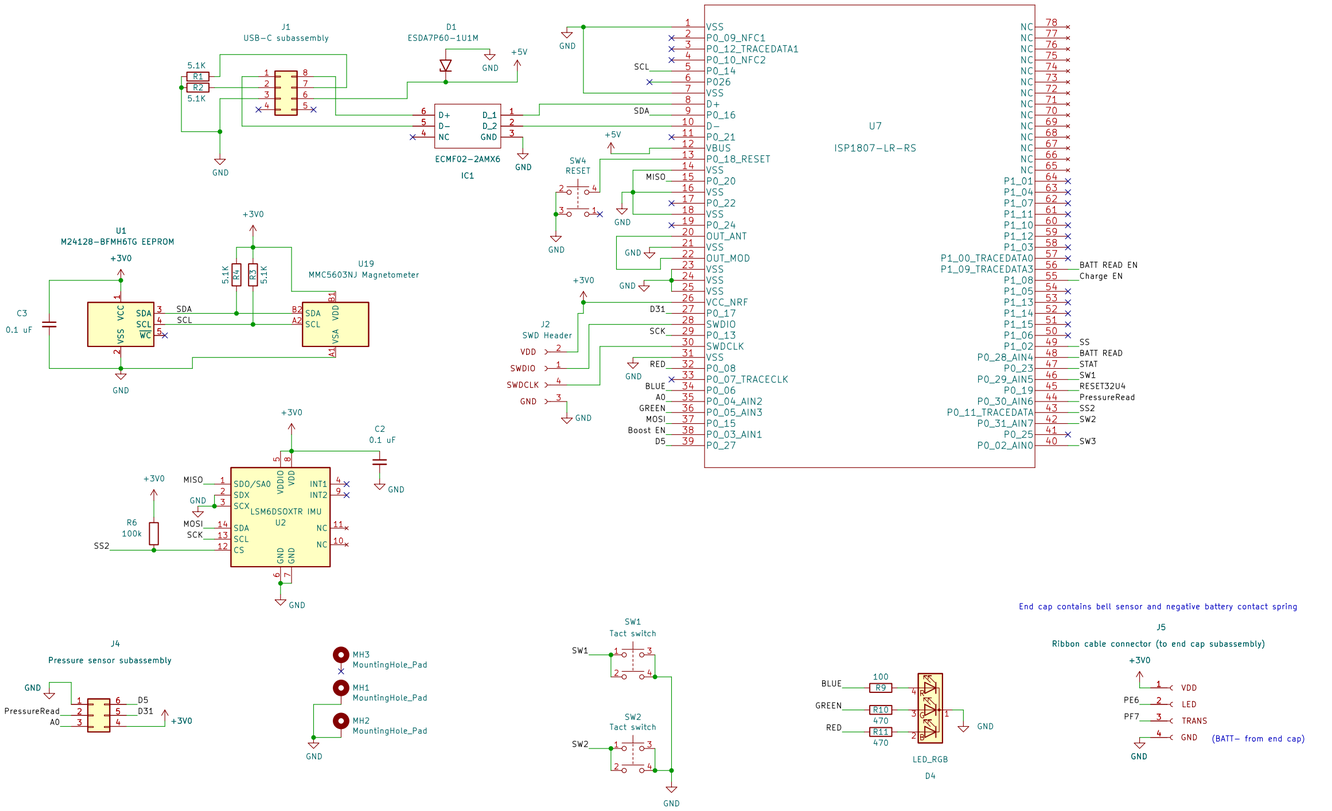

ATmega32U4 and tone hole sensors

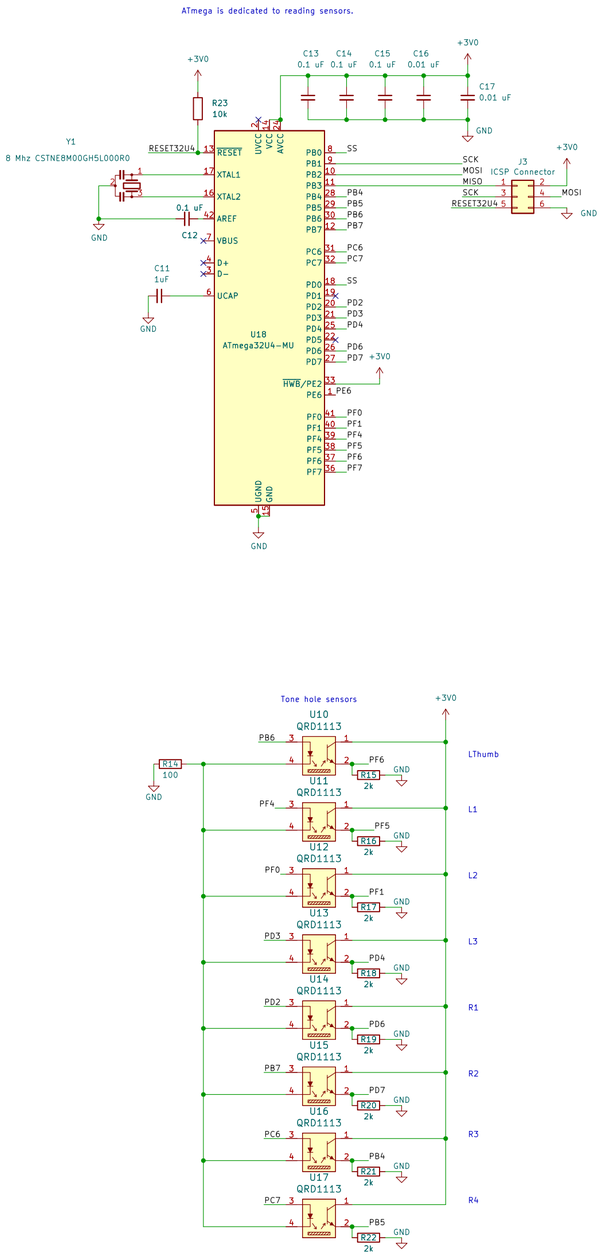

Power and battery management

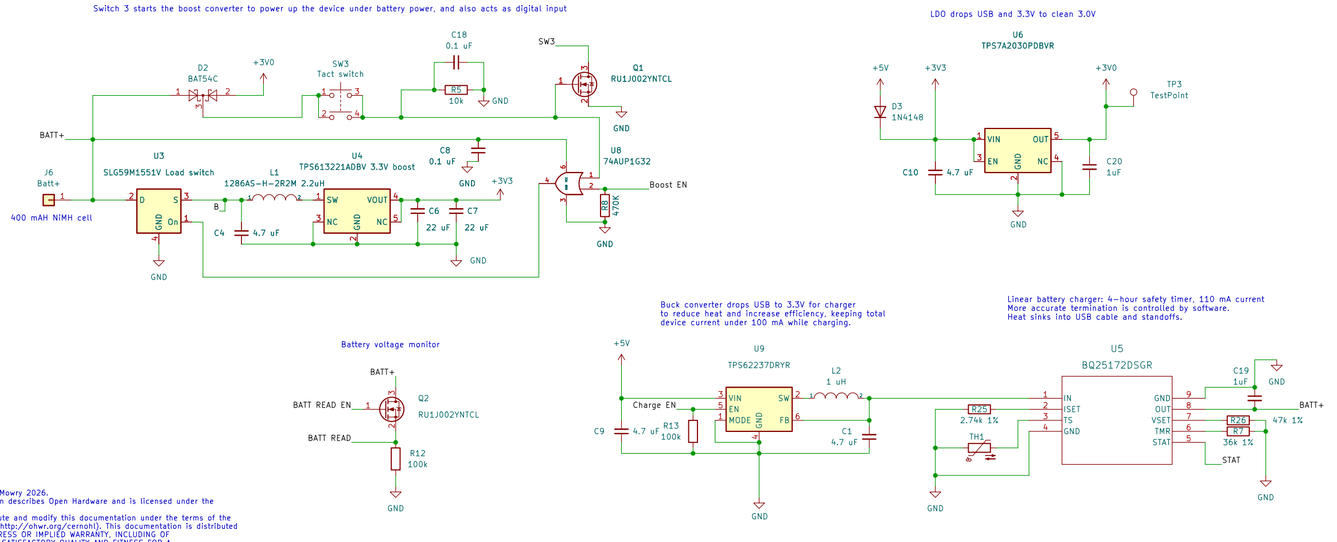

Copyright Andrew Mowry 2026.
This documentation describes Open Hardware and is licensed under the CERN OHL v. 1.2.
You may redistribute and modify this documentation under the terms of the CERN OHL v.1.2. (http://ohwr.org/cernohl). This documentation is distributed WITHOUT ANY EXPRESS OR IMPLIED WARRANTY, INCLUDING OF MERCHANTABILITY, SATISFACTORY QUALITY AND FITNESS FOR A PARTICULAR PURPOSE. Please see the CERN OHL v.1.2 for applicable conditions

Mowry Stringed Instruments

Sheet: /
File: WARBL2_5.1.kicad_sch

Title: WARBL2

Size: A2	Date: 2026-03-05	**Rev: 5.1**
KiCad E.D.A. kicad (6.0.8)		Id: 1/1

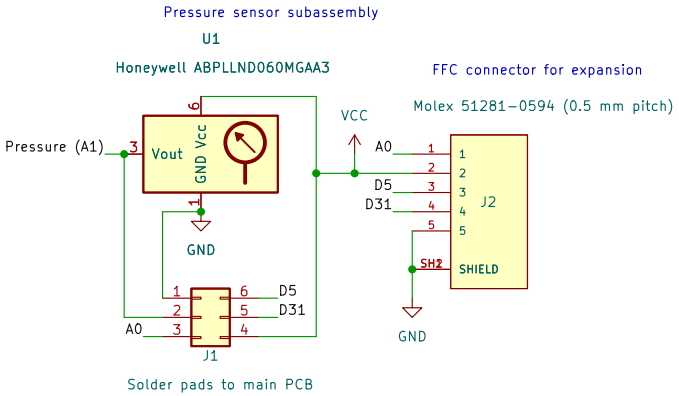

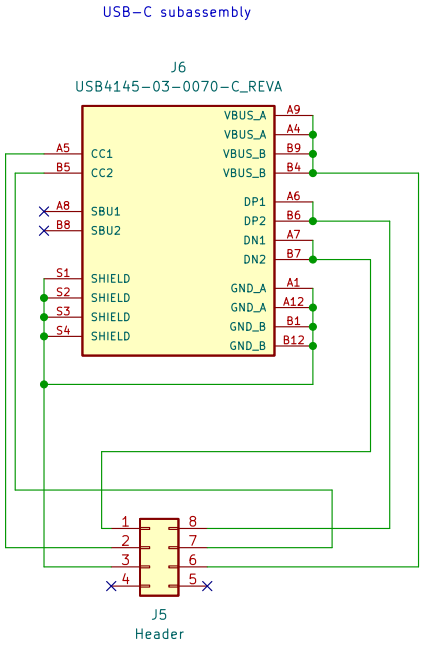

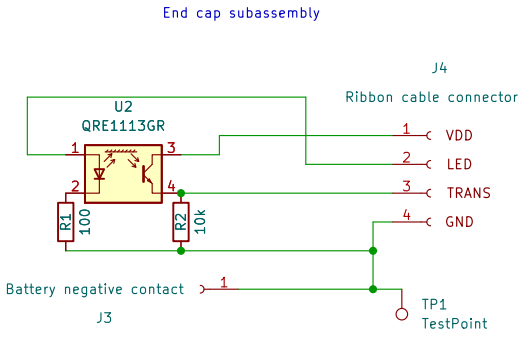

Mowry Stringed Instruments

Sheet: /

File: WARBL_subassemblies_schematics.kicad_sch

Title: WARBL2 Subassemblies

Size: A4	Date: 2024-04-12	**Rev: 4.8**
KiCad E.D.A. kicad (6.0.8)		Id: 2/1