220VAC TO 5VDC

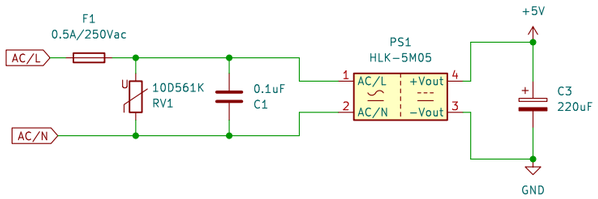

AC CONNECTOR+RELAY+BUZZER

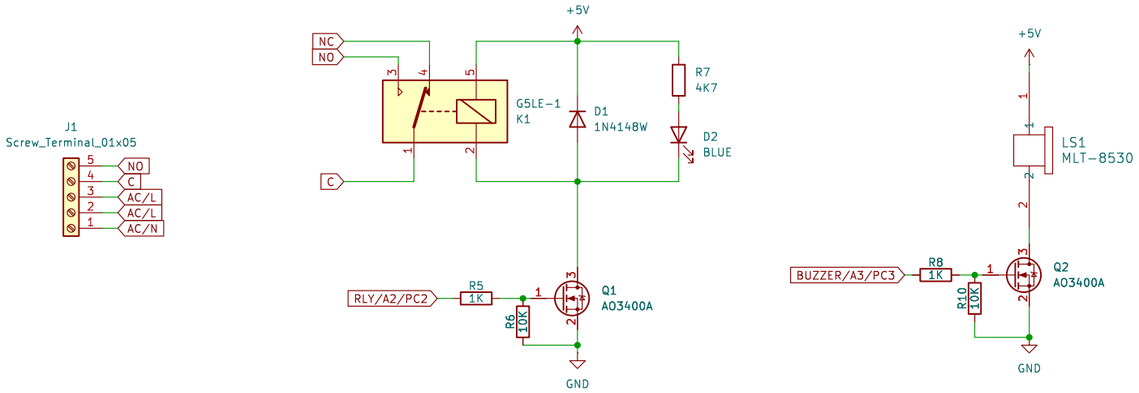

MICROCONTROLLER

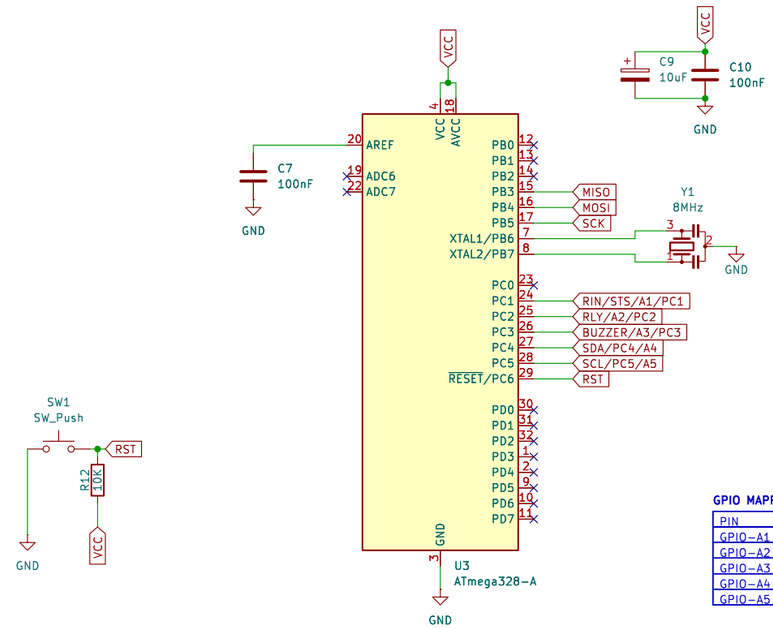

GPIO MAPPING

PIN	DEVICE
GPIO-A1	RELAY STATUS LED
GPIO-A2	RELAY
GPIO-A3	BUZZER
GPIO-A4 (SDA)	SENSOR SDA
GPIO-A5 (SCL)	SENSOR SCL

FID1 Fiducial FID2 Fiducial FID3 Fiducial

H1 MountingHole H2 MountingHole H3 MountingHole H4 MountingHole

ProxiWave-D
Engineered By
Open Source Hardware

ToF Sensor

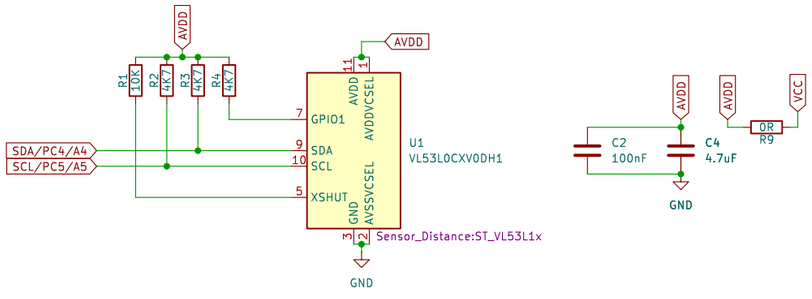

Needs to be calibrated for touchless operation:
Calibration value is range of 10MM-30MM maximum
for seamless operation.

5VDC TO 3.3VDC

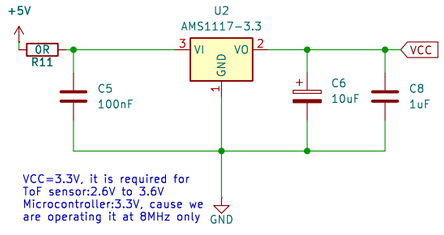

VCC=3.3V, it is required for
ToF sensor:2.6V to 3.6V
Microcontroller:3.3V, cause we
are operating it at 8MHz only

PROGRAMMING PORT

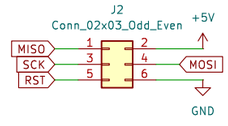

LED INDICATION

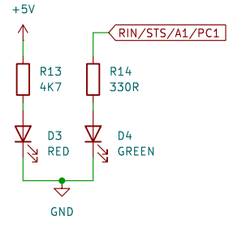

D1:Power LED indication
D2:Relay Switching(RINGER, ON/OFF Status

Sheet: /
File: PWD-v010A.kicad_sch

Title:

Size: A3	Date:	Rev:
KiCad E.D.A. 9.0.0		Id: 1/1