POWER SUPPLY 220VAC-5VDC

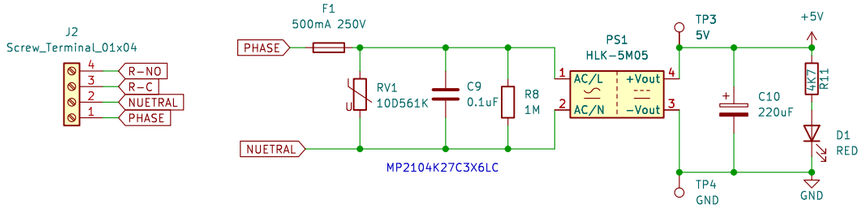

LDO

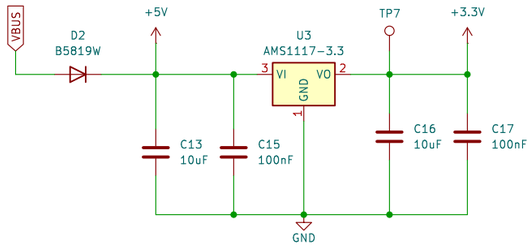

RELAY

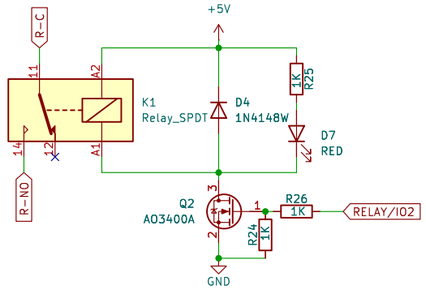

MICROCONTROLLER

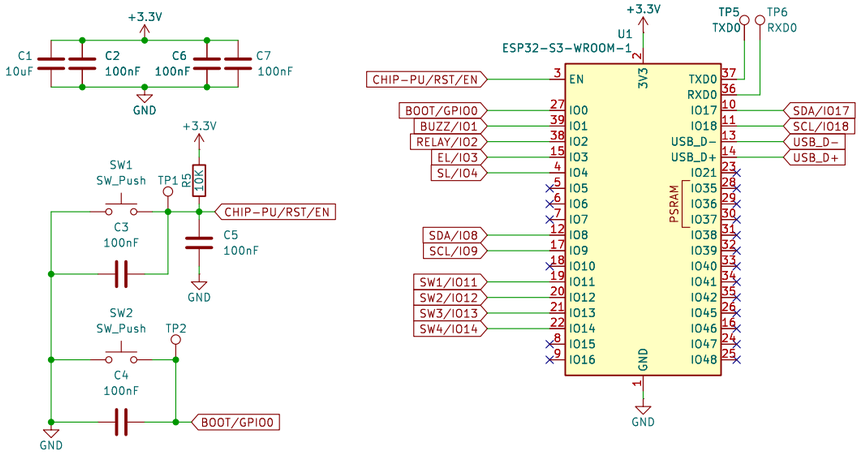

USB-CONNECTOR

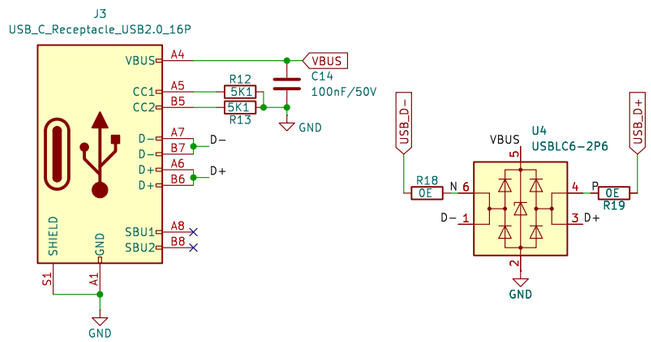

INDICATION

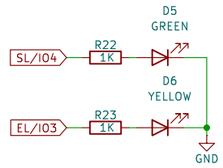

STATUS-LED:WE CAN USE THIS LED AS NETWORK CONNECTION.
ERROR-LED:WE CAN USE THIS ERROR LED.

DISPLAY & RTC

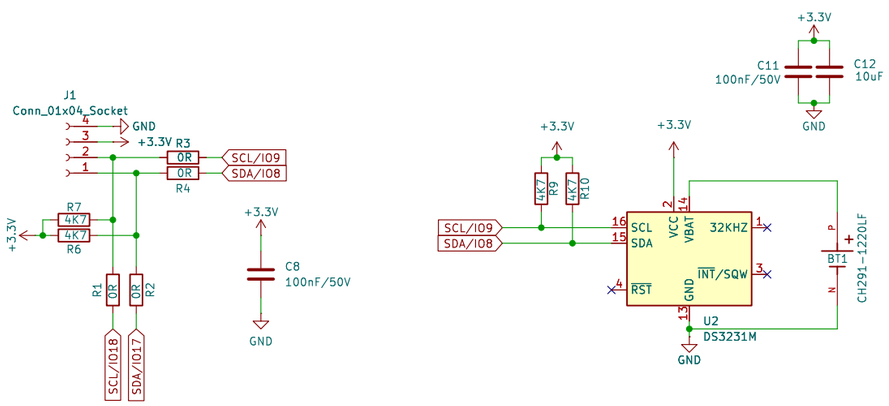

SWITCHES

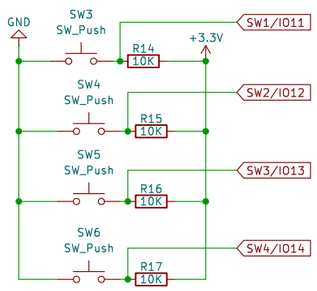

BUZZER

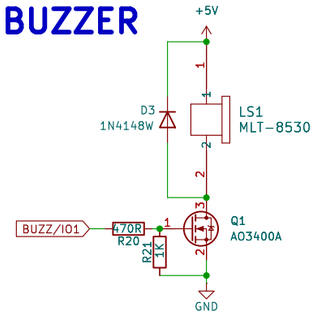

FIDUCIAL

ENGINEERED IN INDIA
Design By-Md Ammar Maniyar
Ampnics

Sheet: /
File: ZAP-01A.kicad_sch

Title: ZEEN_AI_PLUG

Size: A3	Date: 2025-11-15	**Rev: Rev-v0.1.0A**
KiCad E.D.A. 9.0.1		Id: 1/1