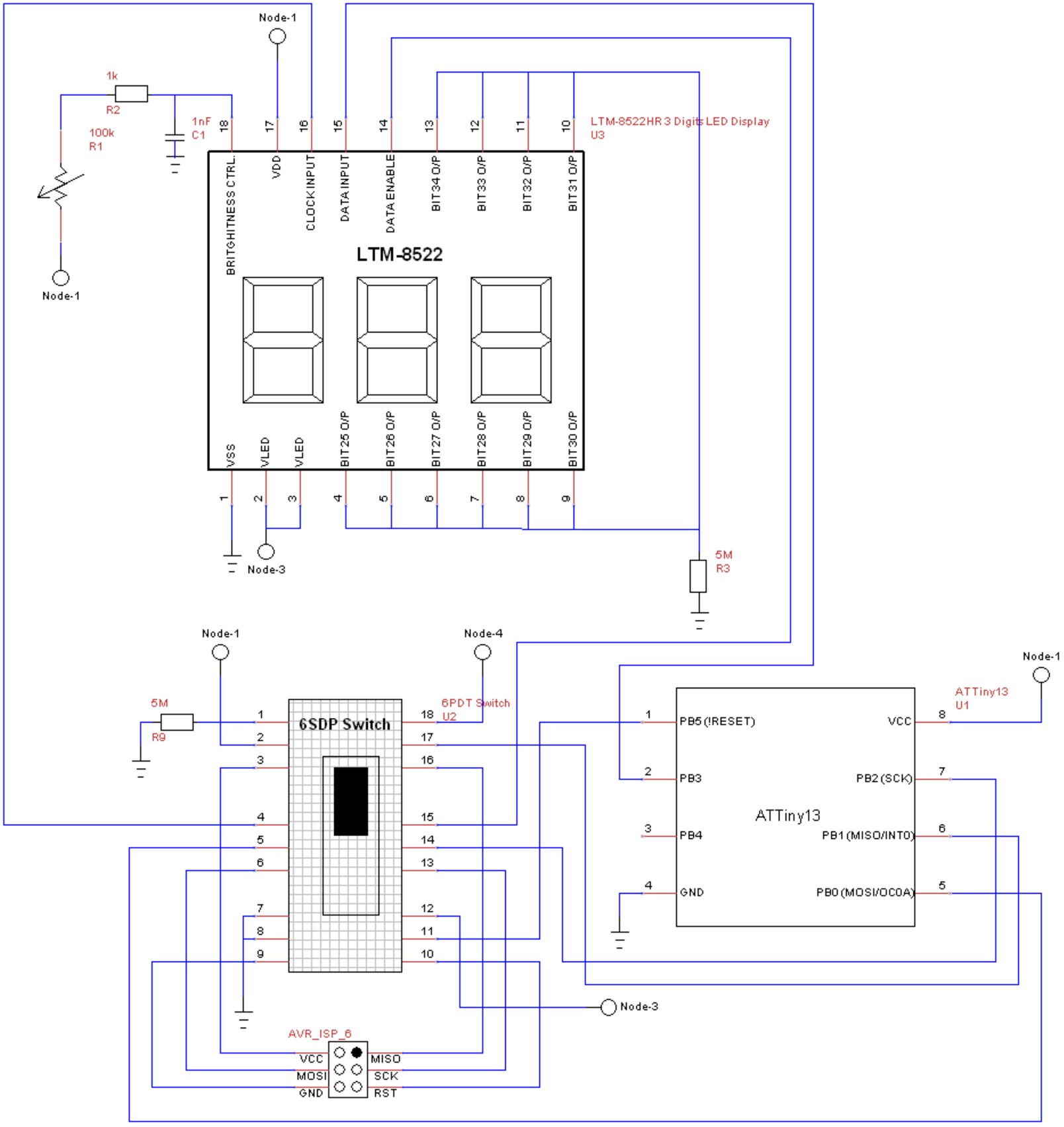

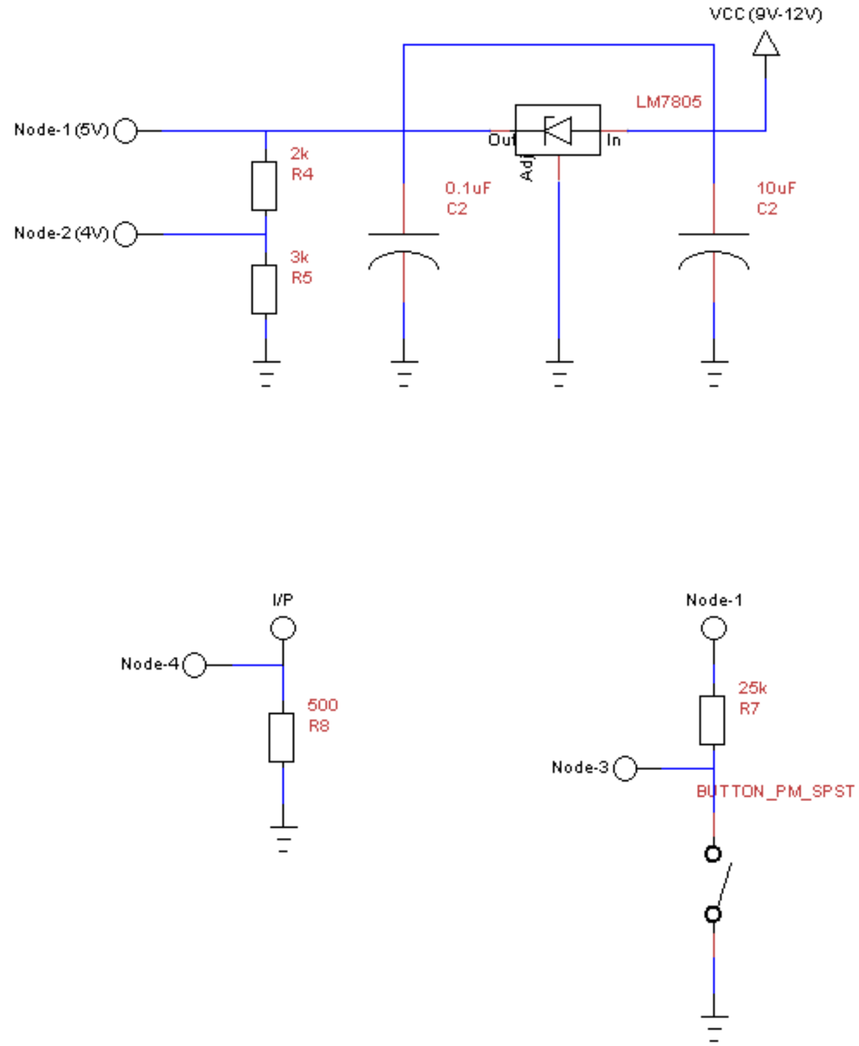

Title ATTiny13 Driving LTM-8522 LED Display		
Author Amr Ergawy Amr Ergawy		
File :t-speed-meter\hall-effect-speed-meter-ms-10.dsn		Document
Revision 1.0	Date 7 March 2014	Sheets 1 of 1