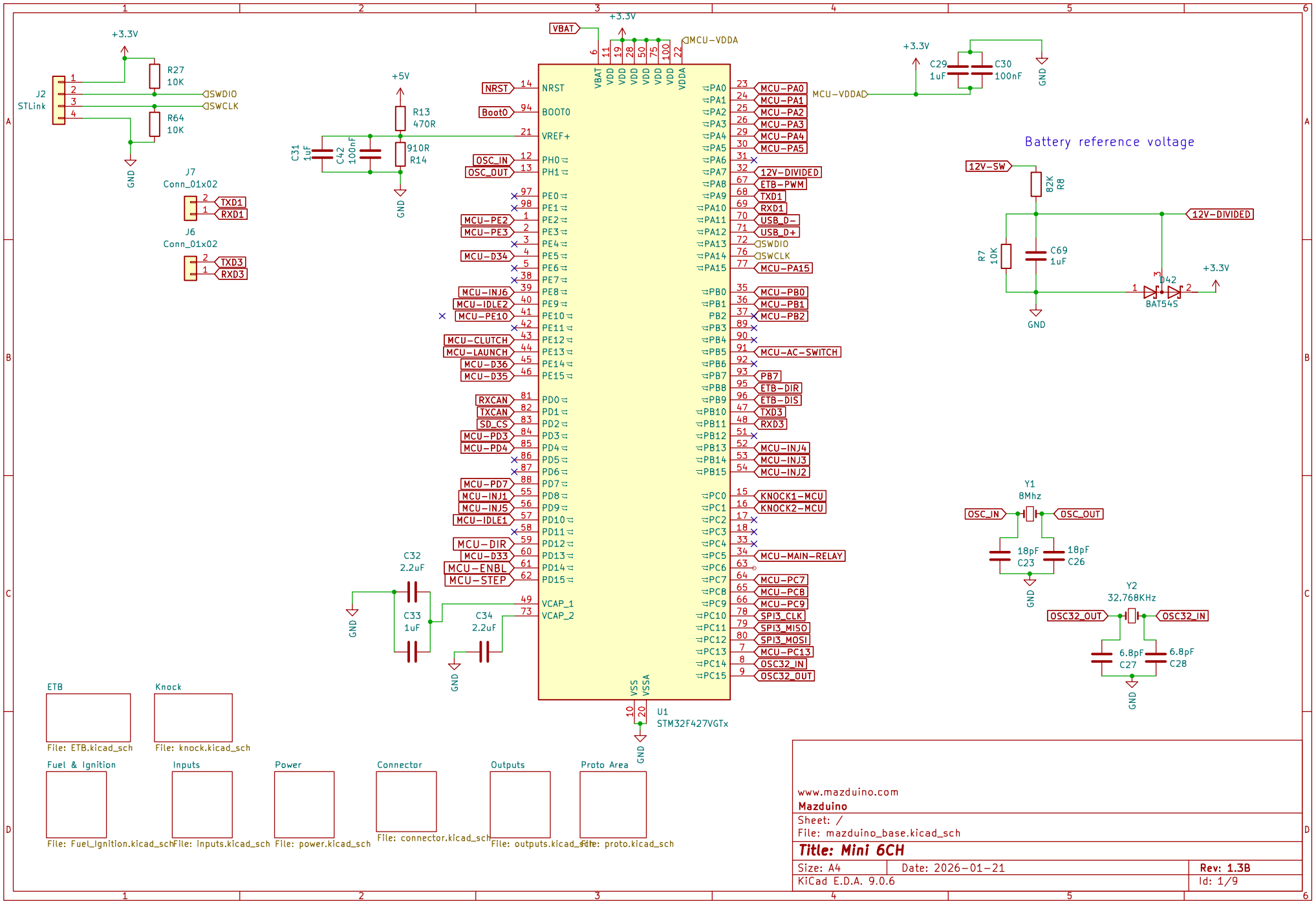
+3.3V
R27
10K
J2
STLink
SWDIO
SWCLK
R64
10K
GND
J7
Conn_01x02
TXD1
RXD1
J6
Conn_01x02
TXD3
RXD3
+5V
R13
470R
910R
R14
C31
1uF
C42
100nF
GND
VBAT
+3.3V
MCU-VDDA
C29
1uF
C30
100nF
GND
MCU-VDDA
Battery reference voltage
12V-SW
82K
R8
R7
10K
C69
1uF
12V-DIVIDED
D42
BAT545
+3.3V
GND
Y1
8Mhz
OSC_IN
OSC_OUT
18pF
C23
18pF
C26
GND
Y2
32.768KHz
OSC32_OUT
OSC32_IN
6.8pF
C27
6.8pF
C28
GND
NRST
BOOT0
VREF+
PH0
PH1
OSC_IN
OSC_OUT
PE0
PE1
PE2
PE3
PE4
PE5
PE6
PE7
PE8
PE9
PE10
PE11
PE12
PE13
PE14
PE15
MCU-PE2
MCU-PE3
MCU-D34
MCU-INJ6
MCU-IDLE2
MCU-PE10
MCU-CLUTCH
MCU-LAUNCH
MCU-D36
MCU-D35
PD0
PD1
PD2
PD3
PD4
PD5
PD6
PD7
PD8
PD9
PD10
PD11
PD12
PD13
PD14
PD15
RXCAN
TXCAN
SD_CS
MCU-PD3
MCU-PD4
MCU-PD7
MCU-INJ1
MCU-INJ5
MCU-IDLE1
MCU-DIR
MCU-D33
MCU-ENBL
MCU-STEP
VCAP_1
VCAP_2
C32
2.2uF
C33
1uF
C34
2.2uF
GND
GND
VSS
VSSA
U1
STM32F427VGTx
GND
PA0
PA1
PA2
PA3
PA4
PA5
PA6
PA7
PA8
PA9
PA10
PA11
PA12
PA13
PA14
PA15
MCU-PA0
MCU-PA1
MCU-PA2
MCU-PA3
MCU-PA4
MCU-PA5
12V-DIVIDED
ETB-PWM
TXD1
RXD1
USB_D-
USB_D+
SWDIO
SWCLK
MCU-PA15
PB0
PB1
PB2
PB3
PB4
PB5
PB6
PB7
PB8
PB9
PB10
PB11
PB12
PB13
PB14
PB15
MCU-PB0
MCU-PB1
MCU-PB2
MCU-AC-SWITCH
PB7
ETB-DIR
ETB-DIS
TXD3
RXD3
MCU-INJ4
MCU-INJ3
MCU-INJ2
PC0
PC1
PC2
PC3
PC4
PC5
PC6
PC7
PC8
PC9
PC10
PC11
PC12
PC13
PC14
PC15
KNOCK1-MCU
KNOCK2-MCU
MCU-MAIN-RELAY
MCU-PC7
MCU-PCB
MCU-PC9
SPI3_CLK
SPI3_MISO
SPI3_MOSI
MCU-PC13
OSC32_IN
OSC32_OUT
ETB
File: ETB.kicad_sch
Knock
File: knock.kicad_sch
Fuel & Ignition
File: Fuel_Ignition.kicad_sch
Inputs
File: inputs.kicad_sch
Power
File: power.kicad_sch
Connector
File: connector.kicad_sch
Outputs
File: outputs.kicad_sch
Proto Area
File: proto.kicad_sch
www.mazduino.com
Mazduino
Sheet: /
File: mazduino_base.kicad_sch
Title: Mini 6CH
Size: A4
Date: 2026-01-21
Rev: 1.3B
KiCad E.D.A. 9.0.6
Id: 1/9

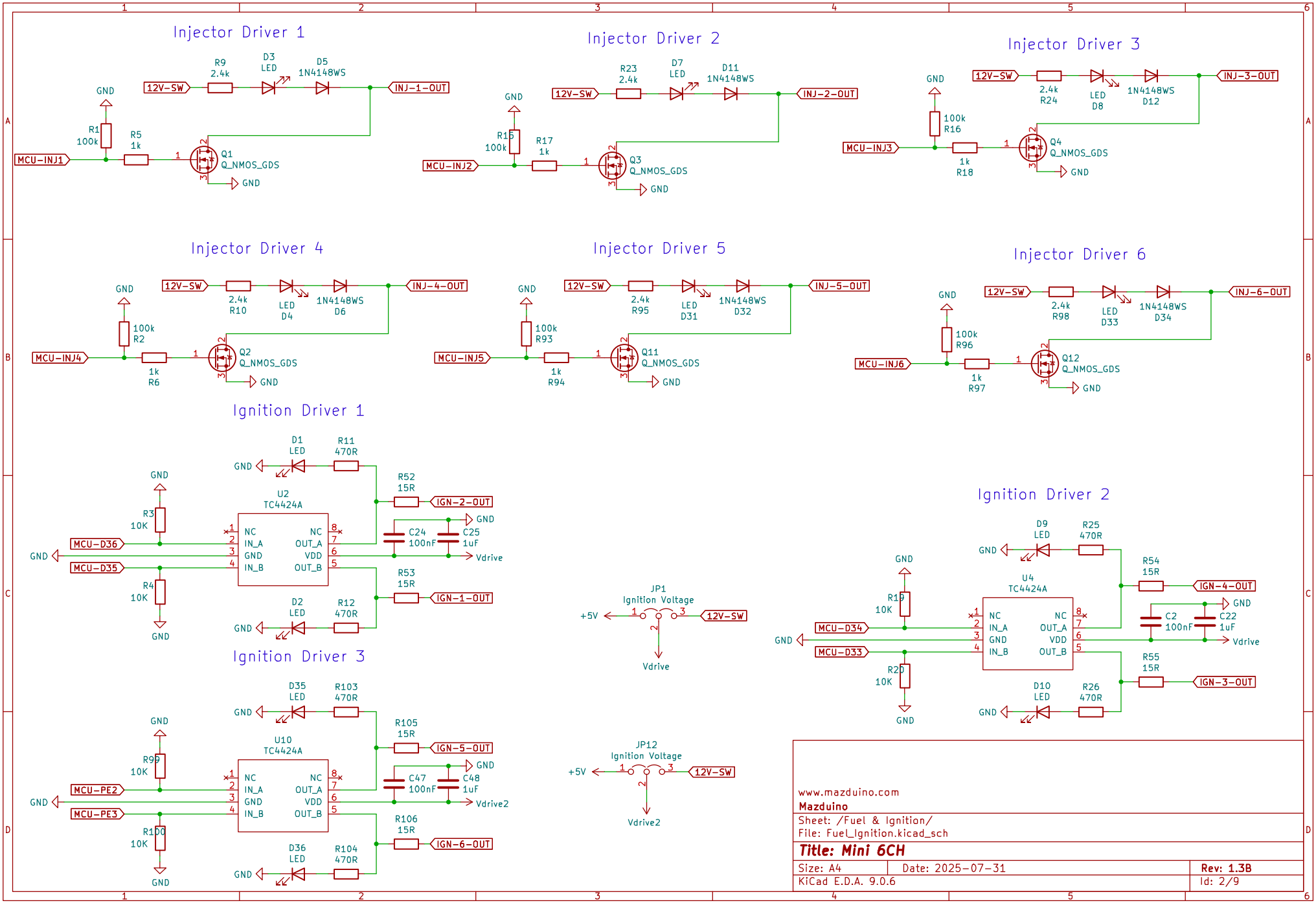
Injector Driver 1
R9
2.4k
D3
LED
D5
1N4148WS
12V-SW
INJ-1-OUT
GND
R1
100k
R5
1k
MCU-INJ1
Q1
Q_NMOS_GDS
GND
Injector Driver 2
R23
2.4k
D7
LED
D11
1N4148WS
12V-SW
INJ-2-OUT
GND
R15
100k
R17
1k
MCU-INJ2
Q3
Q_NMOS_GDS
GND
Injector Driver 3
GND
12V-SW
2.4k
R24
LED
D8
1N4148WS
D12
INJ-3-OUT
100k
R16
MCU-INJ3
1k
R18
Q4
Q_NMOS_GDS
GND
Injector Driver 4
GND
12V-SW
2.4k
R10
LED
D4
1N4148WS
D6
INJ-4-OUT
100k
R2
MCU-INJ4
1k
R6
Q2
Q_NMOS_GDS
GND
Injector Driver 5
GND
12V-SW
2.4k
R95
LED
D31
1N4148WS
D32
INJ-5-OUT
100k
R93
MCU-INJ5
1k
R94
Q11
Q_NMOS_GDS
GND
Injector Driver 6
GND
12V-SW
2.4k
R98
LED
D33
1N4148WS
D34
INJ-6-OUT
100k
R96
MCU-INJ6
1k
R97
Q12
Q_NMOS_GDS
GND
Ignition Driver 1
D1
LED
R11
470R
GND
R52
15R
IGN-2-OUT
U2
TC4424A
GND
R3
10K
MCU-D36
MCU-D35
R4
10K
NC
IN_A
GND
IN_B
NC
OUT_A
VDD
OUT_B
C24
100nF
C25
1uF
Vdrive
R53
15R
IGN-1-OUT
D2
LED
R12
470R
Ignition Driver 2
D9
LED
R25
470R
GND
R54
15R
IGN-4-OUT
U4
TC4424A
R19
10K
MCU-D34
MCU-D33
R20
10K
C2
100nF
C22
1uF
Vdrive
R55
15R
IGN-3-OUT
D10
LED
R26
470R
Ignition Driver 3
D35
LED
R103
470R
GND
R105
15R
IGN-5-OUT
U10
TC4424A
R99
10K
MCU-PE2
MCU-PE3
R100
10K
C47
100nF
C48
1uF
Vdrive2
R106
15R
IGN-6-OUT
D36
LED
R104
470R
JP1
Ignition Voltage
+5V
12V-SW
Vdrive
JP12
Ignition Voltage
+5V
12V-SW
Vdrive2
www.mazduino.com
Mazduino
Sheet: /Fuel & Ignition/
File: Fuel_Ignition.kicad_sch
Title: Mini 6CH
Size: A4
Date: 2025-07-31
Rev: 1.3B
KiCad E.D.A. 9.0.6
Id: 2/9

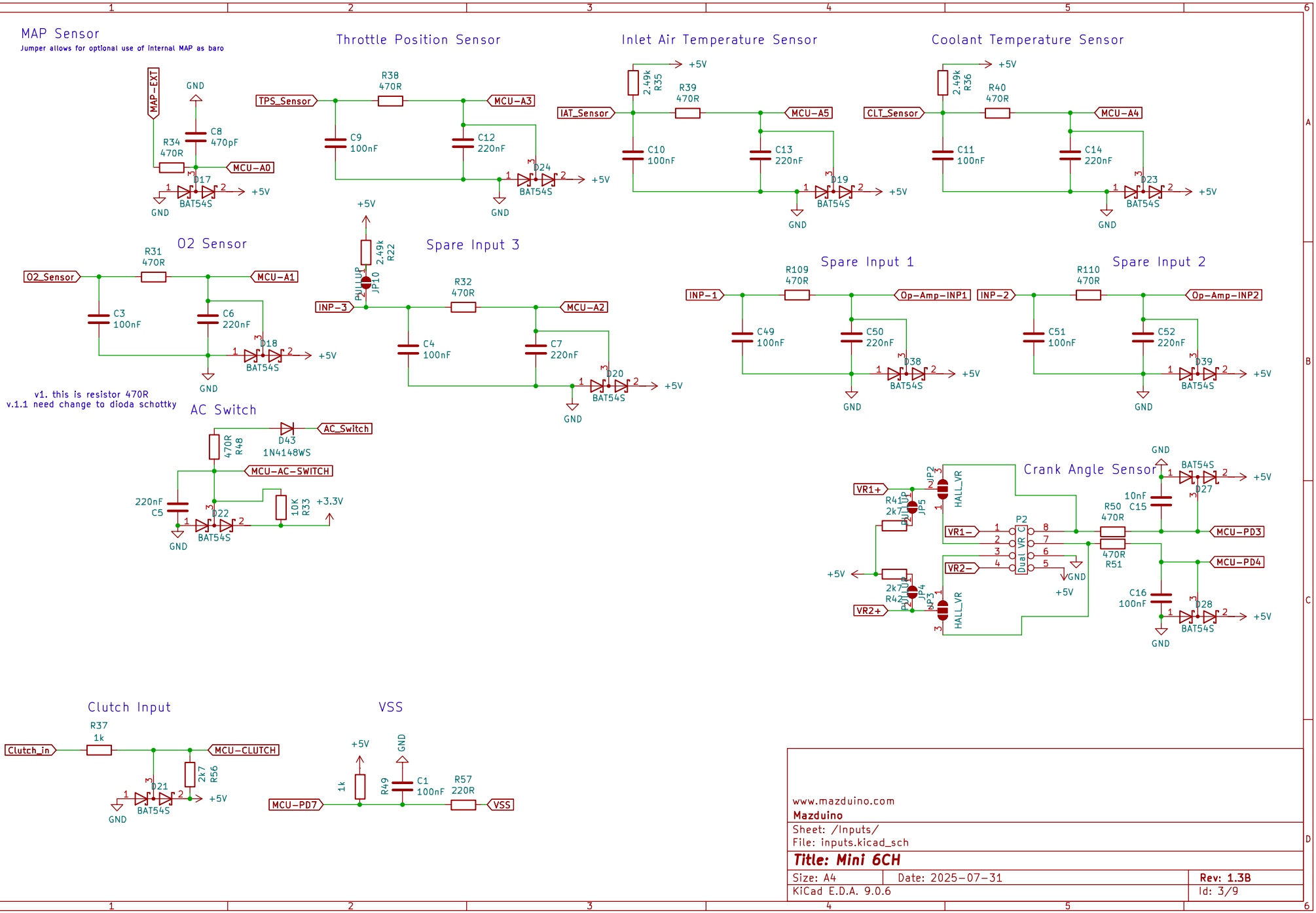
MAP Sensor
Jumper allows for optional use of internal MAP as baro
Throttle Position Sensor
Inlet Air Temperature Sensor
Coolant Temperature Sensor
O2 Sensor
Spare Input 3
Spare Input 1
Spare Input 2
AC Switch
Crank Angle Sensor
Clutch Input
VSS
v1. this is resistor 470R
v.1.1 need change to dioda schottky
MAP-EXT
TPS_Sensor
IAT_Sensor
CLT_Sensor
O2_Sensor
INP-3
INP-1
INP-2
AC_Switch
MCU-AC-SWITCH
VR1+
VR1-
VR2-
VR2+
MCU-PD3
MCU-PD4
Clutch_in
MCU-CLUTCH
MCU-PD7
VSS
BAT54S
HALL_VR
Dual VR C
GND
+5V
+3.3V
www.mazduino.com
Mazduino
Sheet: /Inputs/
File: inputs.kicad_sch
Title: Mini 6CH
Size: A4
Date: 2025-07-31
Rev: 1.3B
KiCad E.D.A. 9.0.6
Id: 3/9

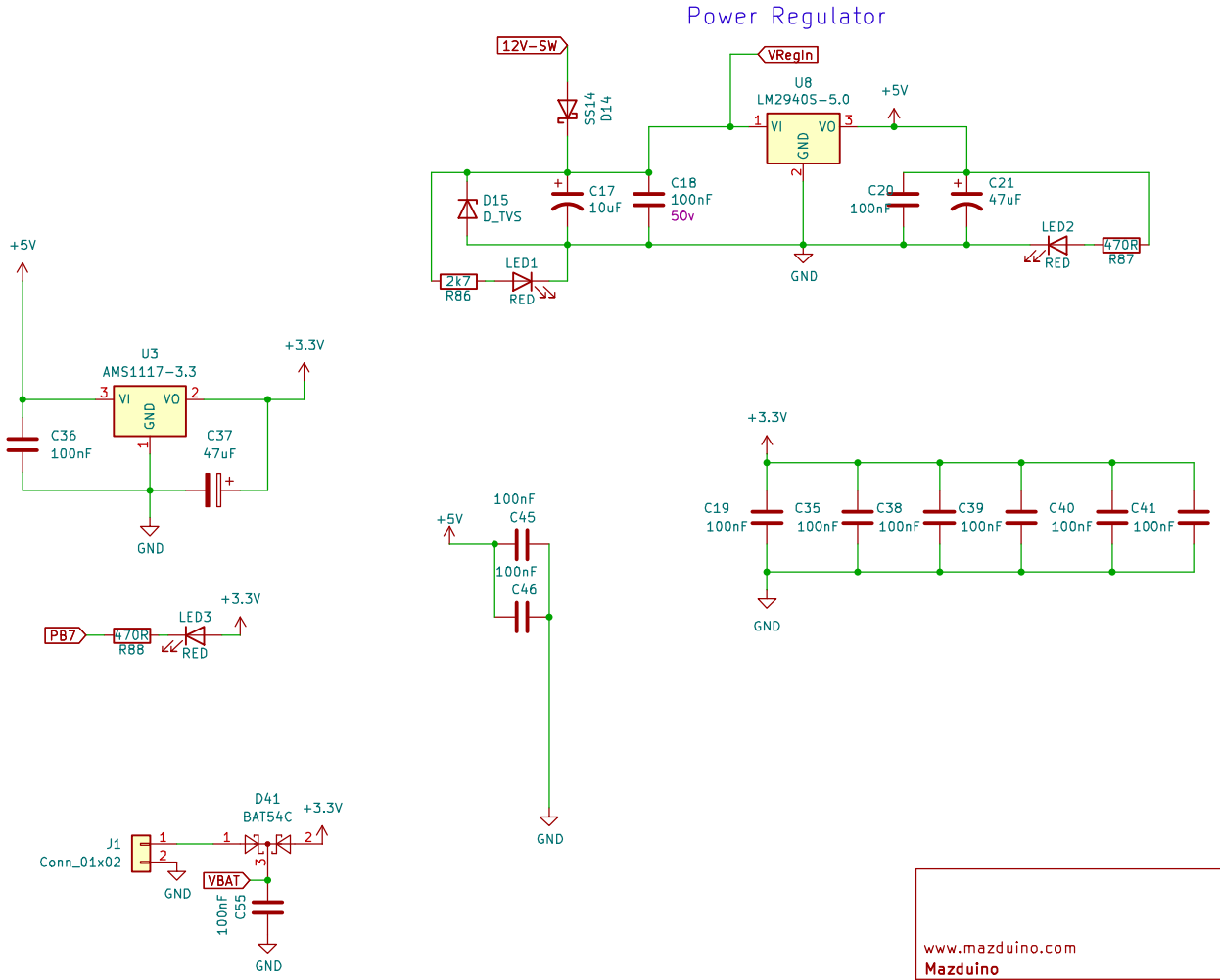

www.mazduino.com

Mazduino

Sheet: /Power/

File: power.kicad_sch

Title: Mini 6CH

Size: A4	Date: 2025-07-31	**Rev: 1.3B**
KiCad E.D.A. 9.0.6		Id: 4/9

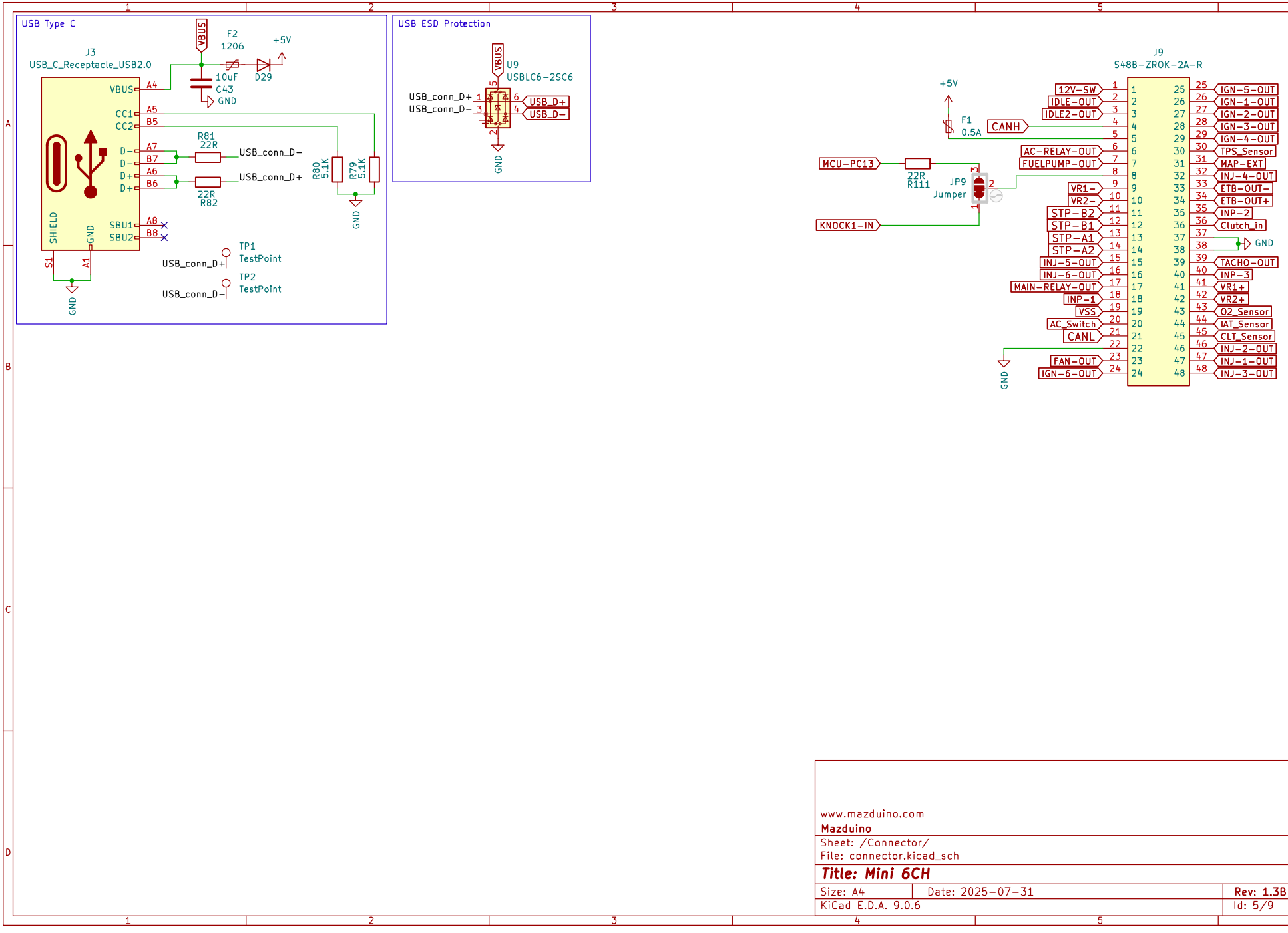

www.mazduino.com
Mazduino
Sheet: /Connector/
File: connector.kicad_sch

Title: Mini 6CH

Size: A4	Date: 2025-07-31	**Rev: 1.3B**
KiCad E.D.A. 9.0.6		Id: 5/9

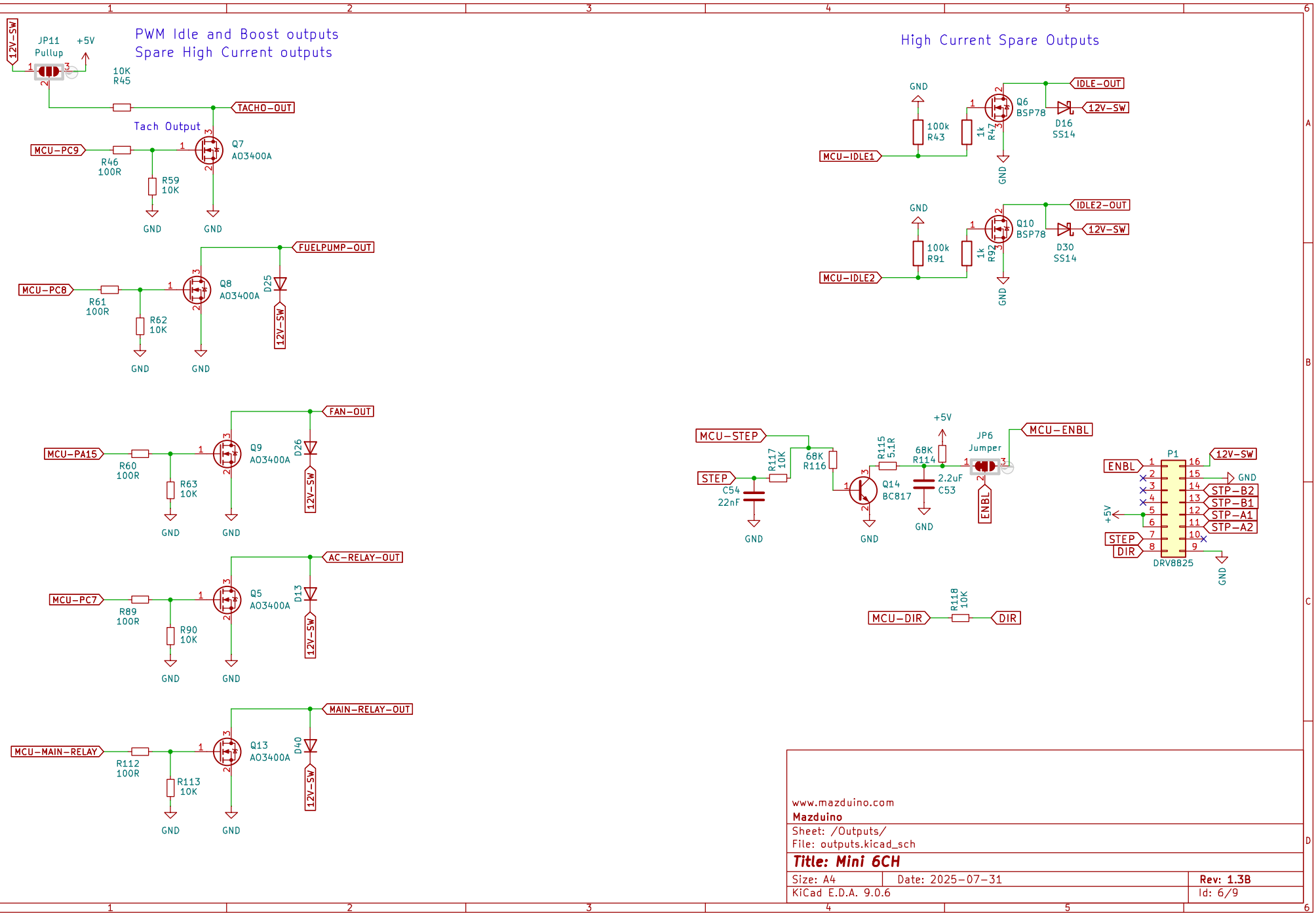
PWM Idle and Boost outputs
Spare High Current outputs
12V-SW
JP11
Pullup
+5V
10K
R45
TACHO-OUT
Tach Output
MCU-PC9
R46
100R
Q7
AO3400A
R59
10K
GND
FUELPUMP-OUT
MCU-PC8
R61
100R
Q8
AO3400A
D25
R62
10K
FAN-OUT
MCU-PA15
R60
100R
Q9
AO3400A
D26
R63
10K
AC-RELAY-OUT
MCU-PC7
R89
100R
Q5
AO3400A
D13
R90
10K
MAIN-RELAY-OUT
MCU-MAIN-RELAY
R112
100R
Q13
AO3400A
D40
R113
10K
High Current Spare Outputs
IDLE-OUT
MCU-IDLE1
100k
R43
1k
R47
Q6
BSP78
D16
SS14
IDLE2-OUT
MCU-IDLE2
100k
R91
1k
R92
Q10
BSP78
D30
SS14
MCU-STEP
STEP
R117
10K
68K
R116
C54
22nF
R115
5.1R
68K
R114
Q14
BC817
2.2uF
C53
JP6
Jumper
ENBL
MCU-ENBL
P1
DRV8825
STP-B2
STP-B1
STP-A1
STP-A2
DIR
MCU-DIR
R118
10K
www.mazduino.com
Mazduino
Sheet: /Outputs/
File: outputs.kicad_sch
Title: Mini 6CH
Size: A4
Date: 2025-07-31
Rev: 1.3B
KiCad E.D.A. 9.0.6
Id: 6/9

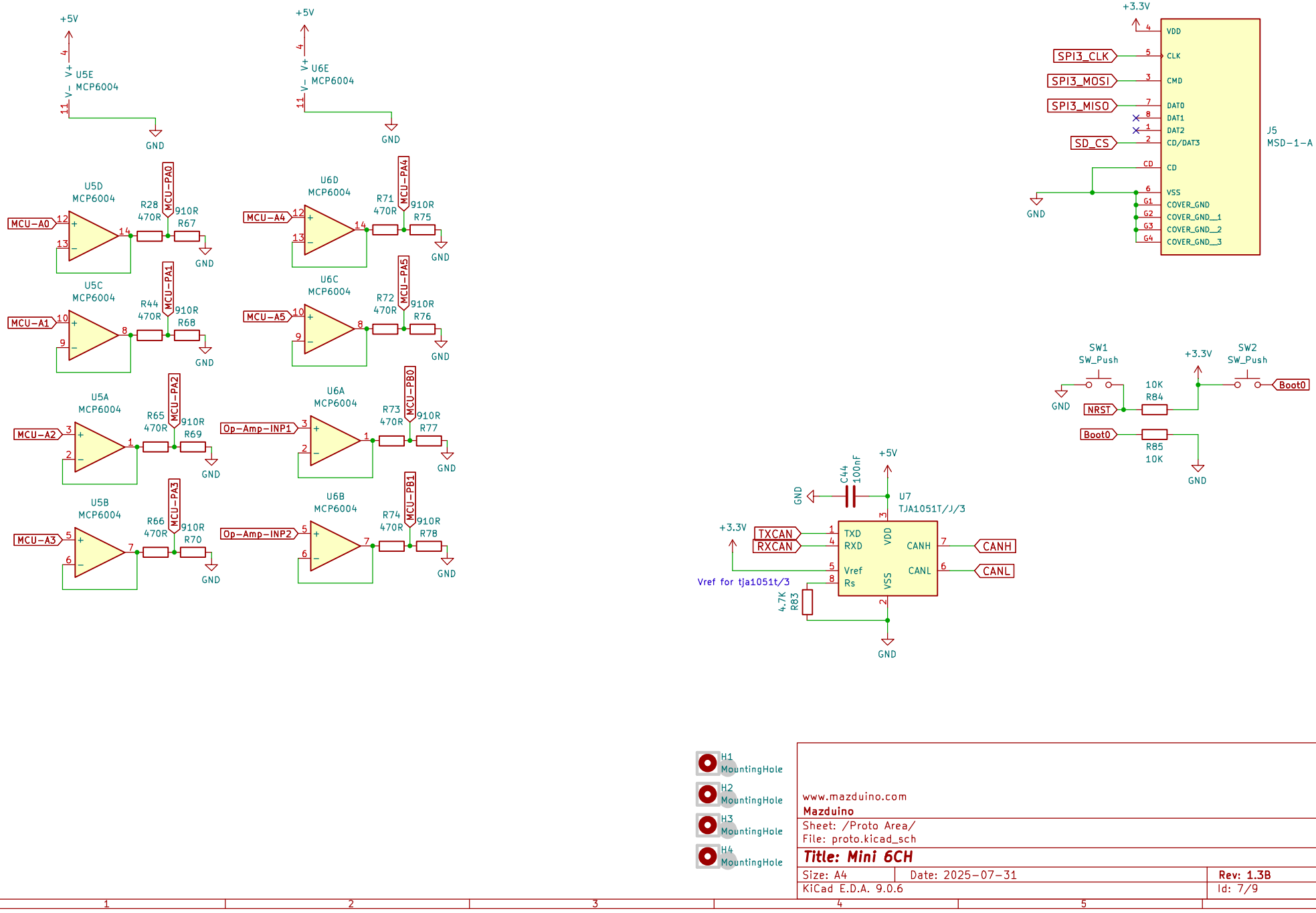
+5V
U5E
MCP6004
GND
+5V
U6E
MCP6004
GND
U5D
MCP6004
MCU-A0
R28
470R
MCU-PA0
910R
R67
GND
U6D
MCP6004
MCU-A4
R71
470R
MCU-PA4
910R
R75
GND
U5C
MCP6004
MCU-A1
R44
470R
MCU-PA1
910R
R68
GND
U6C
MCP6004
MCU-A5
R72
470R
MCU-PA5
910R
R76
GND
U5A
MCP6004
MCU-A2
R65
470R
MCU-PA2
910R
R69
GND
U6A
MCP6004
Op-Amp-INP1
R73
470R
MCU-PB0
910R
R77
GND
U5B
MCP6004
MCU-A3
R66
470R
MCU-PA3
910R
R70
GND
U6B
MCP6004
Op-Amp-INP2
R74
470R
MCU-PB1
910R
R78
GND
+3.3V
SPI3_CLK
SPI3_MOSI
SPI3_MISO
SD_CS
VDD
CLK
CMD
DAT0
DAT1
DAT2
CD/DAT3
CD
VSS
COVER_GND
COVER_GND__1
COVER_GND__2
COVER_GND__3
J5
MSD-1-A
GND
SW1
SW_Push
GND
NRST
10K
R84
+3.3V
SW2
SW_Push
Boot0
Boot0
R85
10K
GND
C44
100nF
+5V
GND
U7
TJA1051T/J/3
+3.3V
TXCAN
RXCAN
TXD
RXD
Vref
Rs
VDD
VSS
CANH
CANL
CANH
CANL
Vref for tja1051t/3
4.7K
R83
GND
H1
MountingHole
H2
MountingHole
H3
MountingHole
H4
MountingHole
www.mazduino.com
Mazduino
Sheet: /Proto Area/
File: proto.kicad_sch
Title: Mini 6CH
Size: A4
Date: 2025-07-31
Rev: 1.3B
KiCad E.D.A. 9.0.6
Id: 7/9

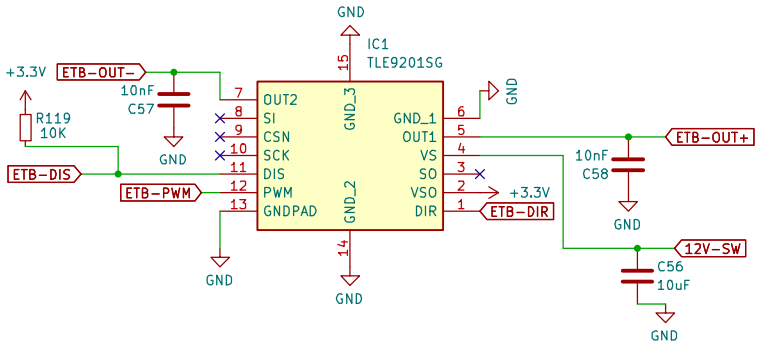

www.mazduino.com
Mazduino

Sheet: /ETB/
File: ETB.kicad_sch

Title: Mini 6CH

Size: A4	Date: 2025-07-31	**Rev: 1.3B**
KiCad E.D.A. 9.0.6		Id: 8/9

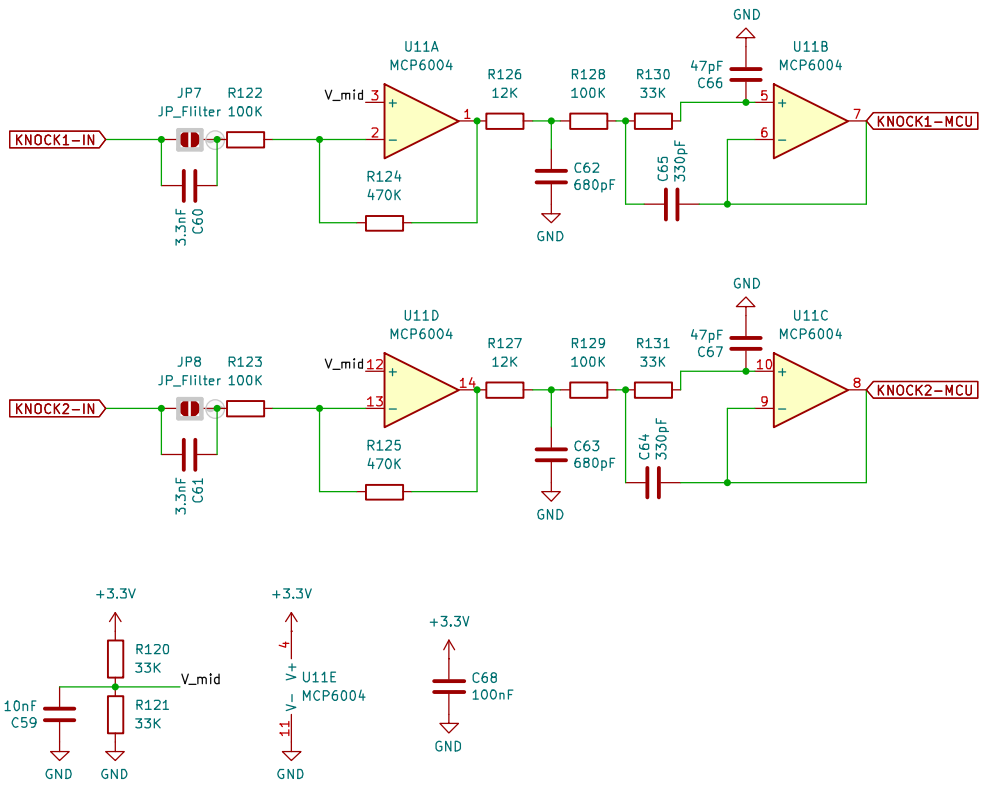

www.mazduino.com
Mazduino

Sheet: /Knock/
File: knock.kicad_sch

Title: Mini 6CH

Size: A4	Date: 2025-07-31	**Rev: 1.3B**
KiCad E.D.A. 9.0.6		Id: 9/9