Powertrain Recruitment Project: Differential Mount

Amrik Verma

FSAE Rules Check

1. What is the most power that can be drawn from the accumulator?
    a. "The maximum power measured by the Energy Meter must not exceed **80 kW**" (pg. 89)
2. What is the maximum voltage available for motor operation?
    a. "The maximum permitted voltage that may occur between any two points must not exceed **600 V DC**" (pg. 90)
3. What kinds of drivetrain designs can you use in the car?
    a. "**Any** transmission and drivetrain may be used" (pg. 66)
4. What is the range of wheel diameters allowed?
    a. "Wheels must be **8 inches or more** in diameter" (pg. 21)
5. What is the minimum acceptable wheelbase for the car?
    a. "Vehicles must have **minimum wheelbase of 1525 mm** " (pg. 19)
6. What is a critical fastener?
    a. Fasteners used in safety-critical systems, such as the suspension and steering systems, must meet specific standards: SAE Grade 5, Metric Class 8.8, AN/MS specifications, or approval by Technical Inspection. They must have a hex head, socket, or Allen design, with at least two threads extending beyond the lock nut. Additionally, they must include locking mechanisms that prevent complete detachment if the fastener begins to loosen (section T8.2)

Rules Check - Tilt Test

1. If the track of the car is given as “T”, what is the maximum height of the center of gravity that the car can have in order to pass the tilt test in terms of “T”? Your answer should be in terms of T, track, and h, height.

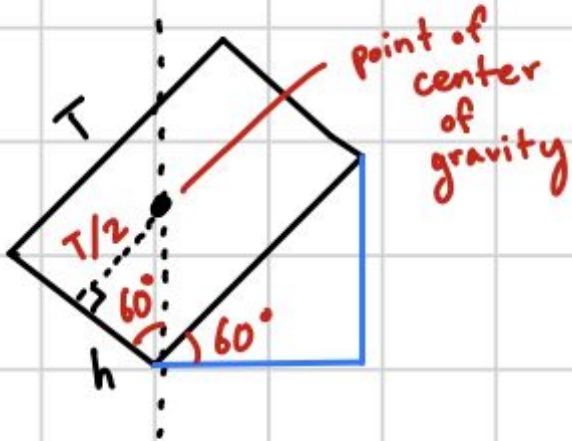

$$\tan(60^\circ) = \frac{T/2}{h}$$

$$\Rightarrow \quad h = \frac{T}{2\tan(60^\circ)}$$

$$\Rightarrow \quad \boxed{h = \frac{T}{2\sqrt{3}}}$$

Therefore, h must be less than T/(2√3)

Brainstorm / Planning

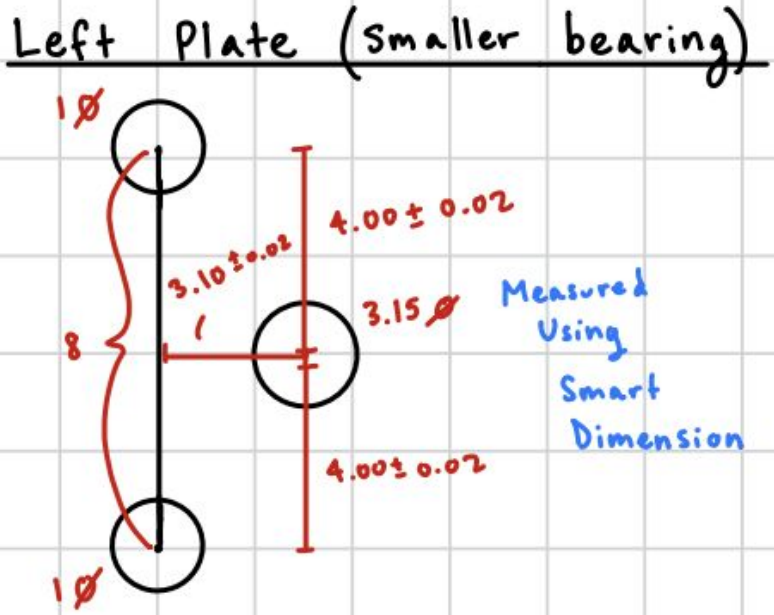

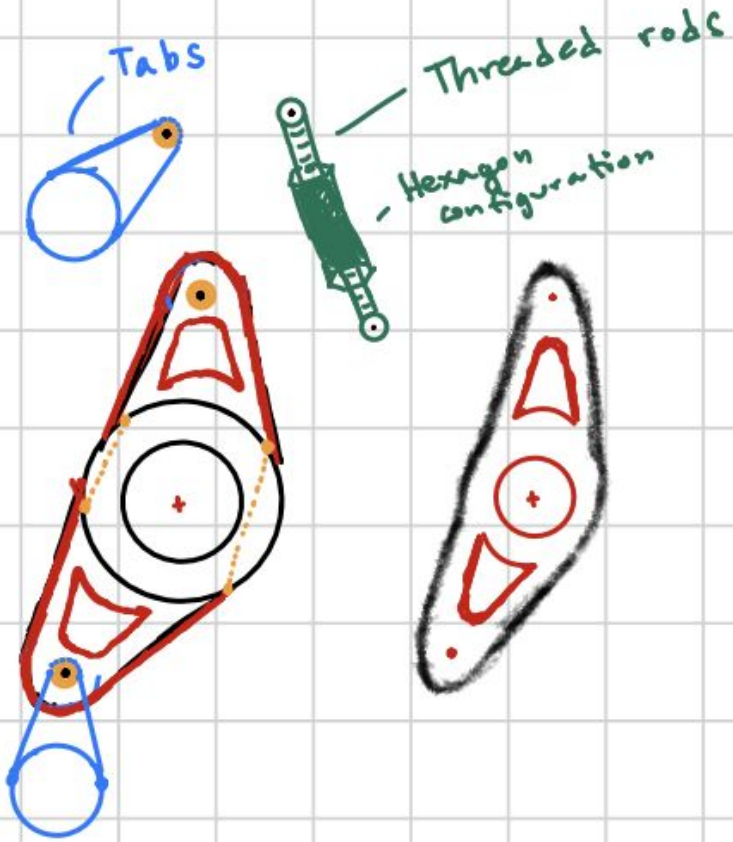

Chain Tensioning Mechanisms

Overview

- Crucial to have good adjustment
  - Too Tight: Wears chain & sprocket, snapping
  - Too Loose: Wears chain & sprocket, chain skips
- Tensioning Mechanisms:
  - Eccentric Tensioner
  - Idler Sprocket
  - Turnbuckle
- Changes whole design based on choice

Eccentric Tensioner

Pros: Compact design, easily integrated into mounting plates

Cons: Limited adjustment range, difficult to implement

Chain Tensioning Mechanisms (cont.)

Turnbuckle

Pros: Adjustable & easy to implement

Cons: Requires more space & frequent adjustments

Idler Sprocket

Pros: Reduces chain wear by increasing wrap around sprocket

Cons: Adds complexity & weight, extra sprocket to spin

Why I Used Turnbuckle?

- Easy to implement & adjust
- Simple design
- 1-inch extension for tensioning
  - Extension is radially and **NOT** linearly
- Should **never** be in compression
- Custom fabrication
  - Hex, threaded rod, welded ends to it

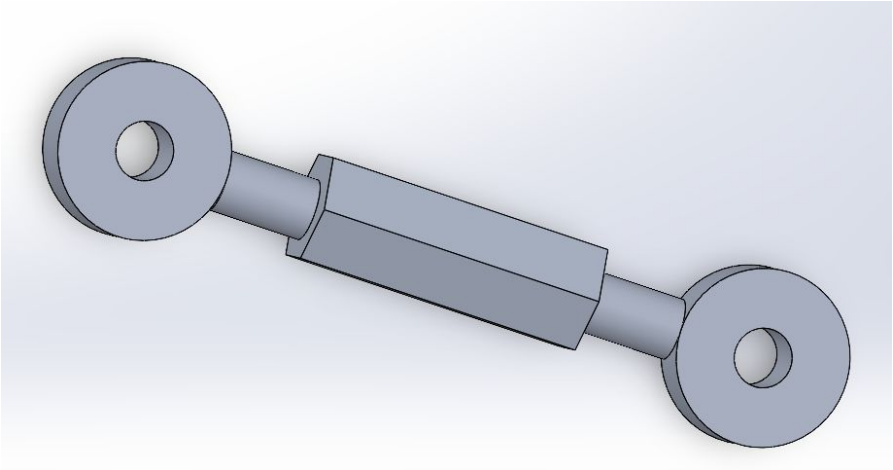

Master Sketch

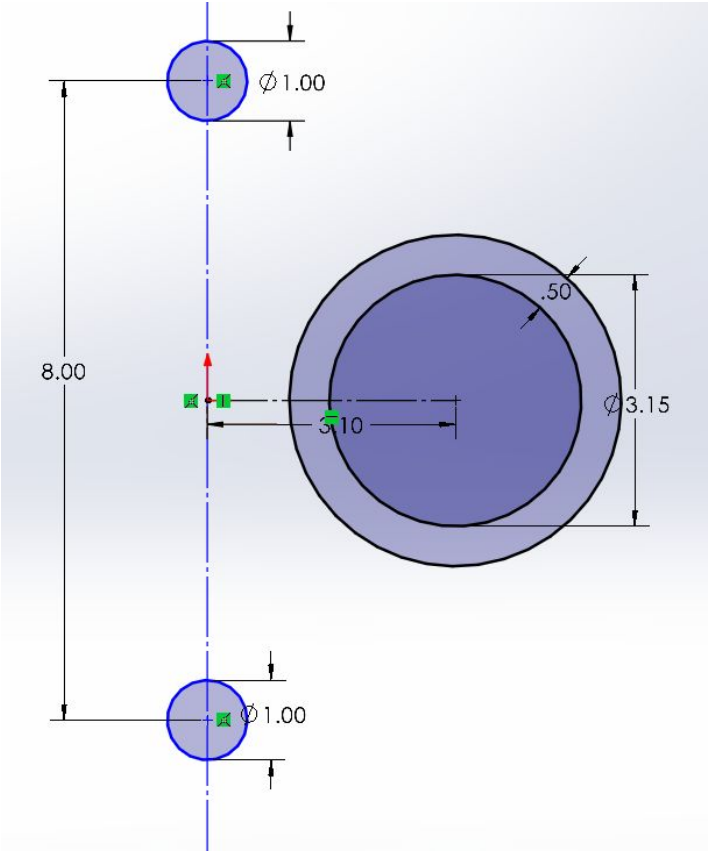

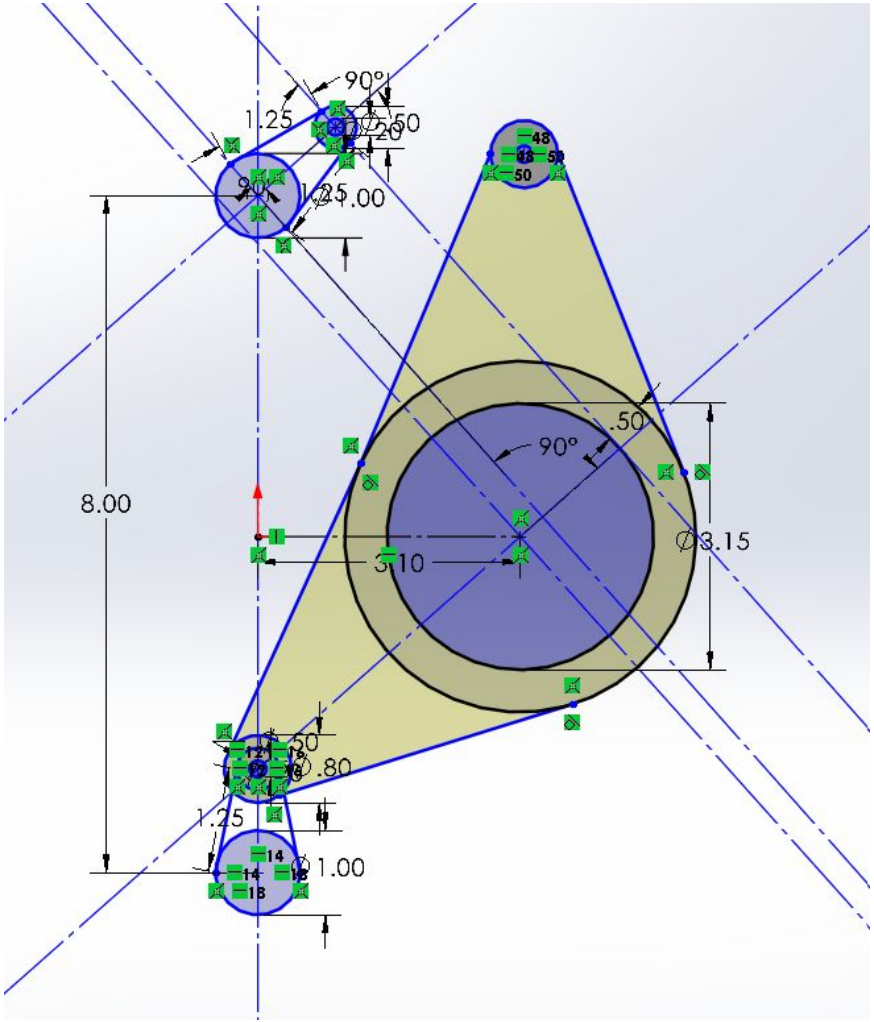

Initial Design for Plates

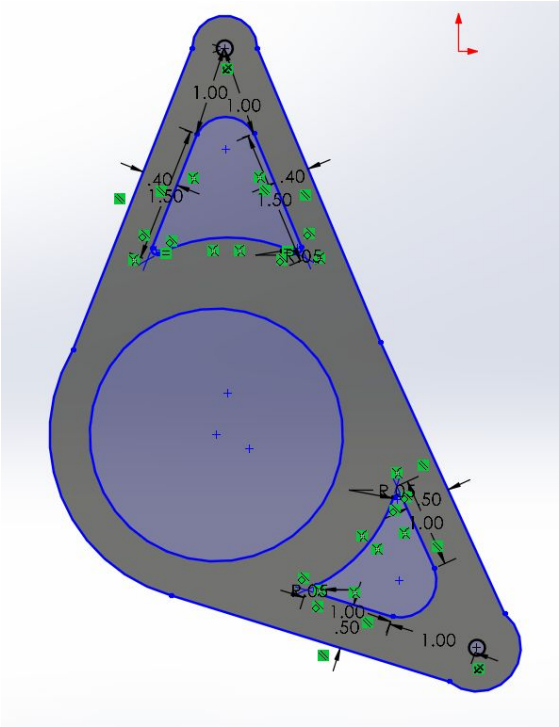

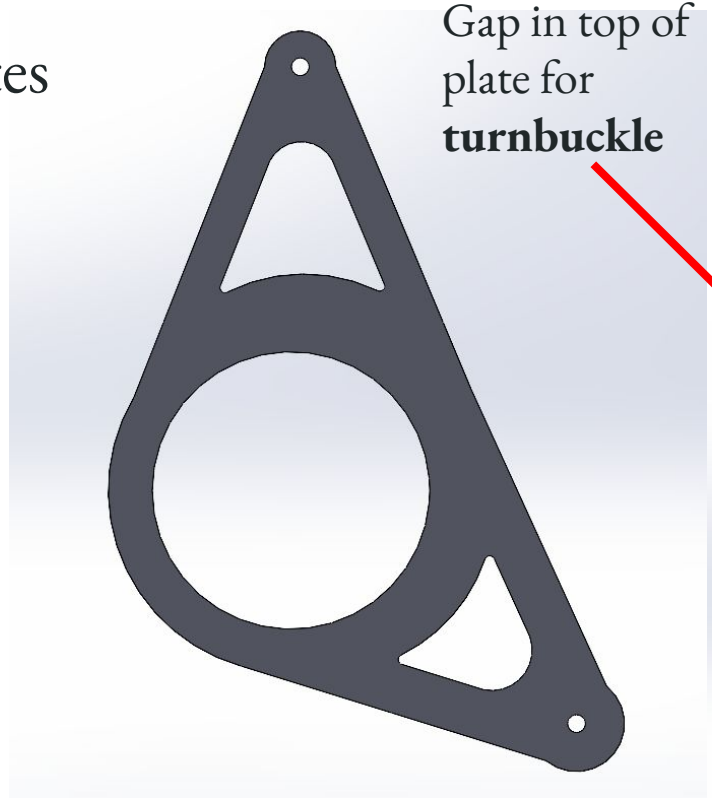

Gap in top of plate for **turnbuckle**

6061-T6 (SS)

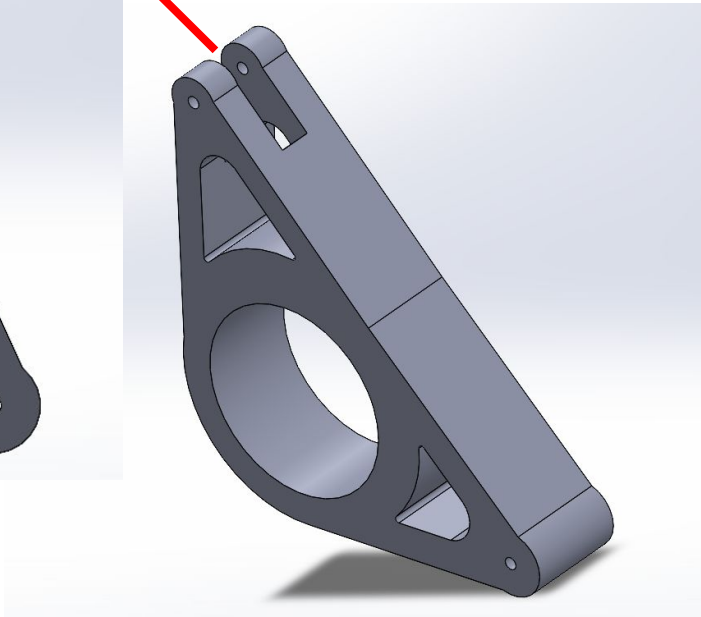

Tabs - Welded onto Chassis

AISI 4130 Steel, normalized at 870C

Light Weight + Simple

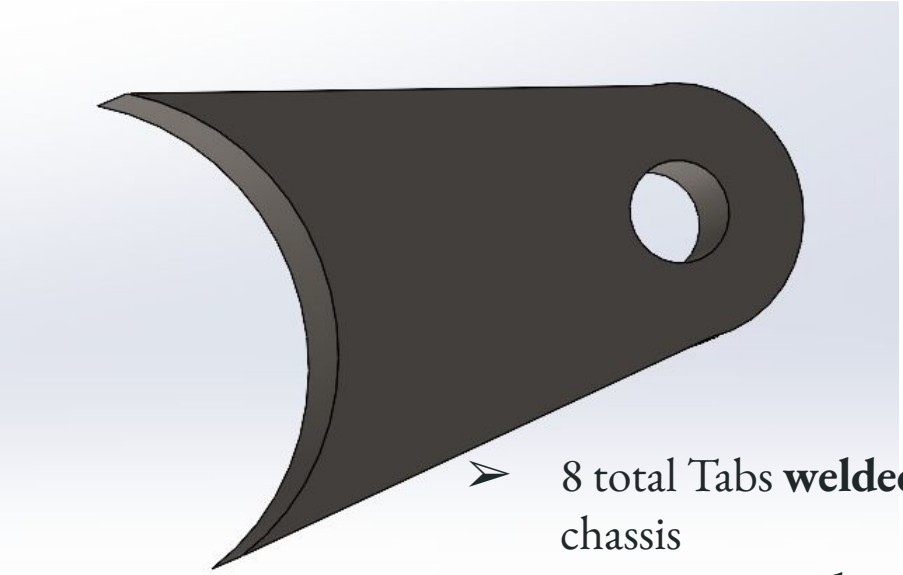

Chassis Cross-Section

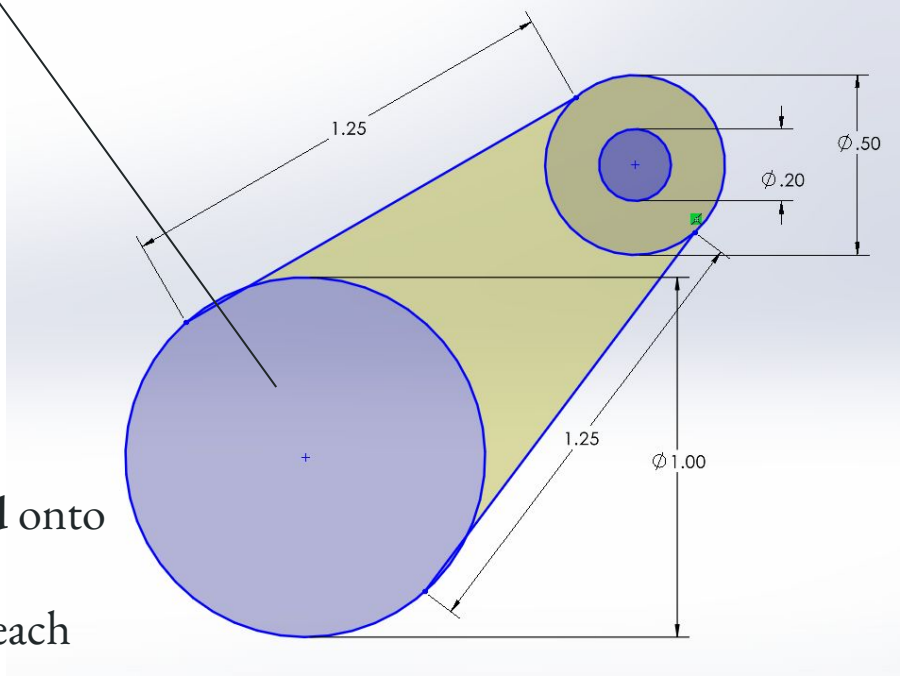

- 8 total Tabs **welded** onto chassis
  - 4 **screwed** to each plate

Calculations

- *Assuming* the motor & sprocket are next to the **right plate** (larger bearing)
- **Forces from Torque** (generated from motor):
  - F1 (Right Plate) - **35,300** Newtons
  - F2 (Left Plate) - **4,314.44** Newtons
- **Shock Force**:
  - 160 Newtons

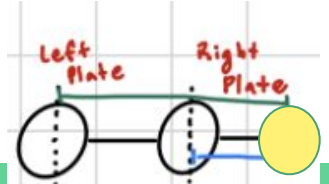

Sprocket

Forces From Torque

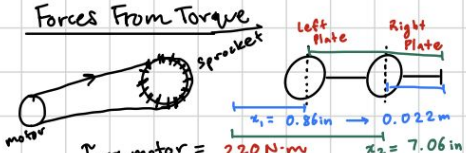

$\tau_{max\ motor} = 220\ N{\cdot}m$

$\tau_{max\ Sprocket} = 220(3.53) \Rightarrow \underline{776.6\ N{\cdot}m}$

Gear Ratio = 3.53:1

$\tau = Fx$:

Right Plate:

$F_1 = \frac{\tau_{Sprocket}}{x_1}$

$\Rightarrow F_1 = \frac{776.6\ N{\cdot}m}{0.022m}$

$\Rightarrow \boxed{F_1 = 35300}$

Left Plate:

$\Rightarrow F_2 = \frac{\tau_{Sprocket}}{x_2}$

$\Rightarrow F_2 = \frac{776.6\ N{\cdot}m}{0.18m}$

$\Rightarrow \boxed{F_2 = 4314.44}$

Forces from Torque generated by motor & carried by sprocket.

In the direction of the motor

Put in as Bearing Load on FEA Simulations

Shock Force

4 Gs = 4 times the weight of the differential & everything touching/mounted to it.

0.01 lbs each

Left Plate: 0.83 lbs → 0.376 kg

Right Plate: 1.43 lbs → 0.65 kg

2 TurnBuckles: 0.02 lbs → 0.0045 kg

0.03 lbs each

8 Tabs: 0.24 lbs → 0.0136 kg

Total Mass of Mounting System: 2.52 lbs → 1.14 kg

Drexler Differential: 6.31 lbs → 2.86 kg

Total Mass: (Mounting + Differential) 2.52 lbs + 6.31 lbs ⇒ 8.83 lbs → 4.00 kg

Total weight ⇒ $(4.00\ kg)(10\ m/s^2)$ ⇒ 40 Newtons

4Gs: 4(40 N) = 160 N

$\boxed{160.0\ N}$

Shock Force

OG Right Plate

Model name: Modified Right Plate
Study name: Static 1(-Default-)
Plot type: Factor of Safety Factor of Safety1
Criterion : Automatic
Factor of safety distribution: Min FOS = 1.5

- Static 1 (-Default-)
  - Modified Right Plate (-[SW16(
  - Connections
  - Fixtures
    - Fixed-1
  - External Loads
    - BearingLoads-1 (:-1-
    - BearingLoads-2 (:35,300 N:)
  - Mesh
    - Mesh Quality Plot
      - Quality1 (-Mesh-)
  - Result Options
  - **Results**
    - Stress1 (-vonMises-)
    - Displacement1 (-Res disp-)
    - Strain1 (-Equivalent-)
    - **Factor of Safety1 (-FOS-)**

TOO CHUNKY!

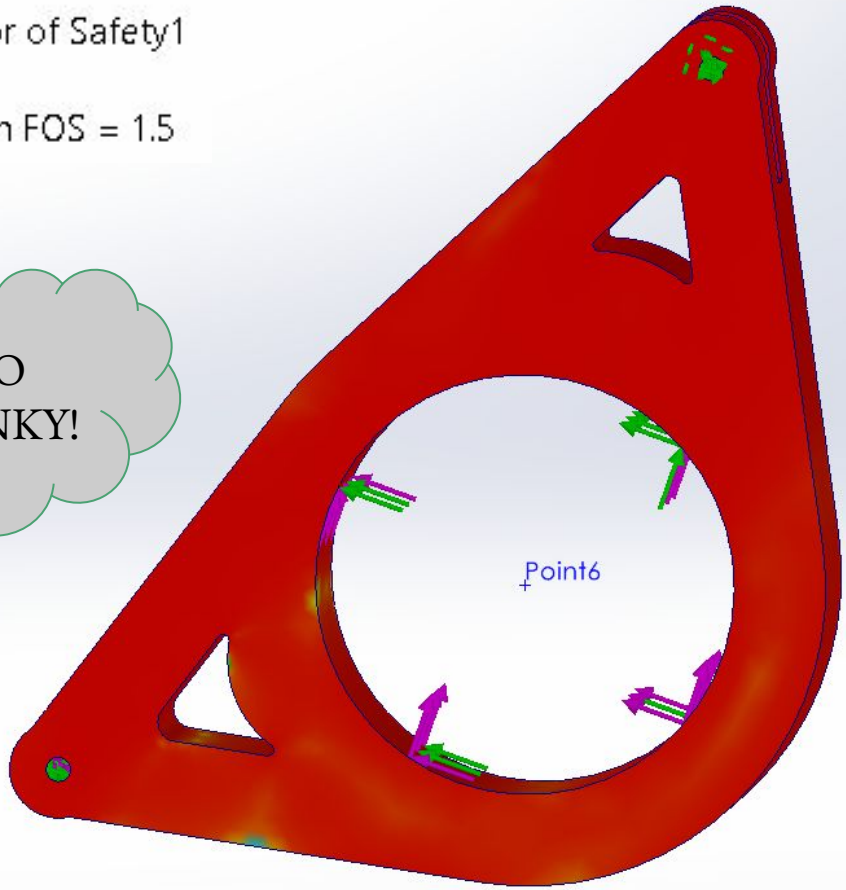

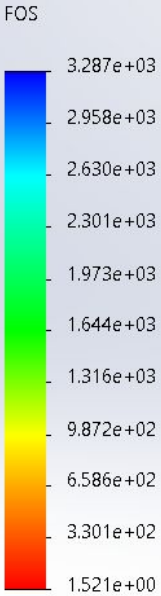

IDWORKS Educational Product. For Instructional Use Only.

Modified Right Plate - Thinned Out

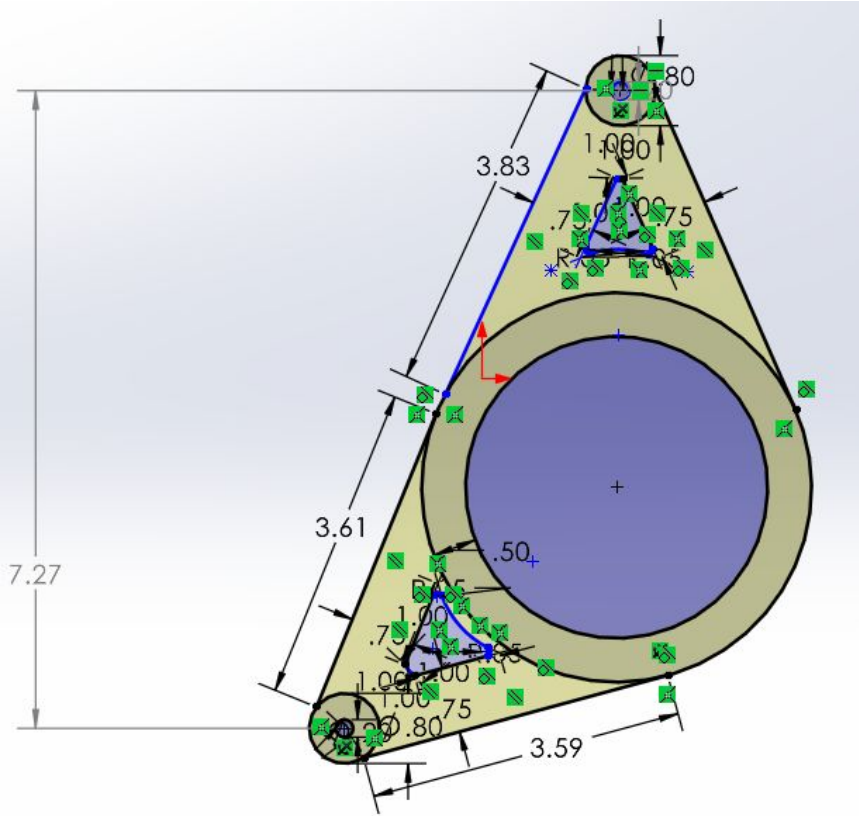

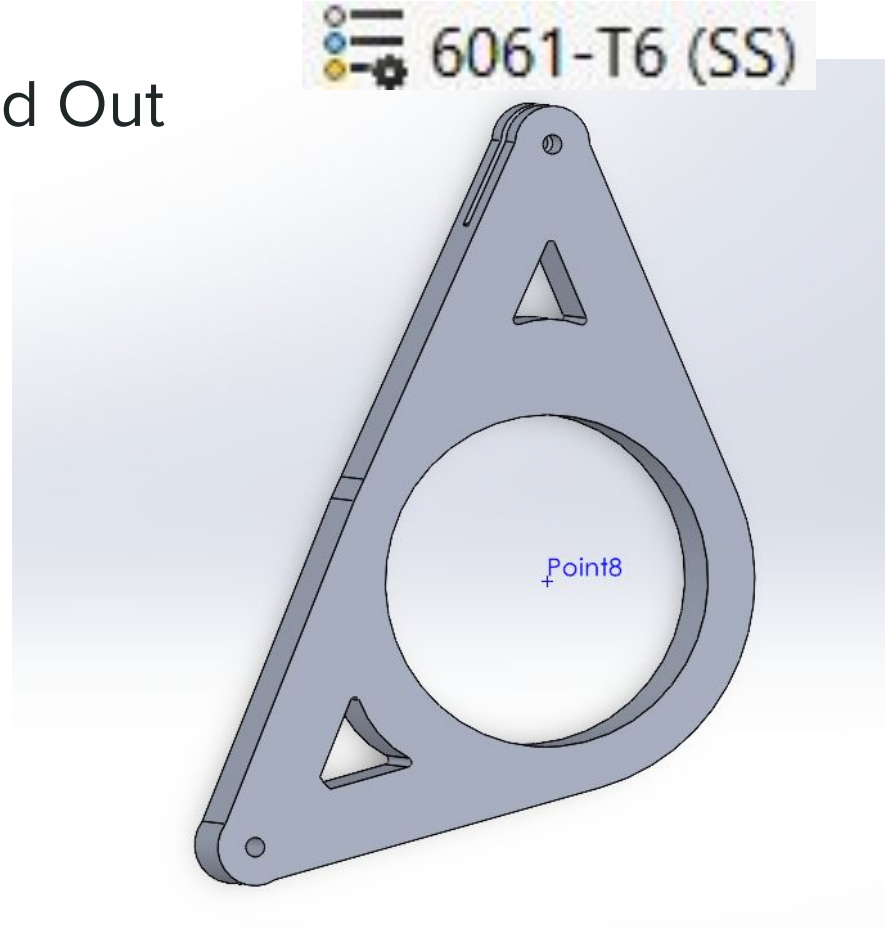

Diff Mount Design (Plates + Turnbuckles + Tabs)

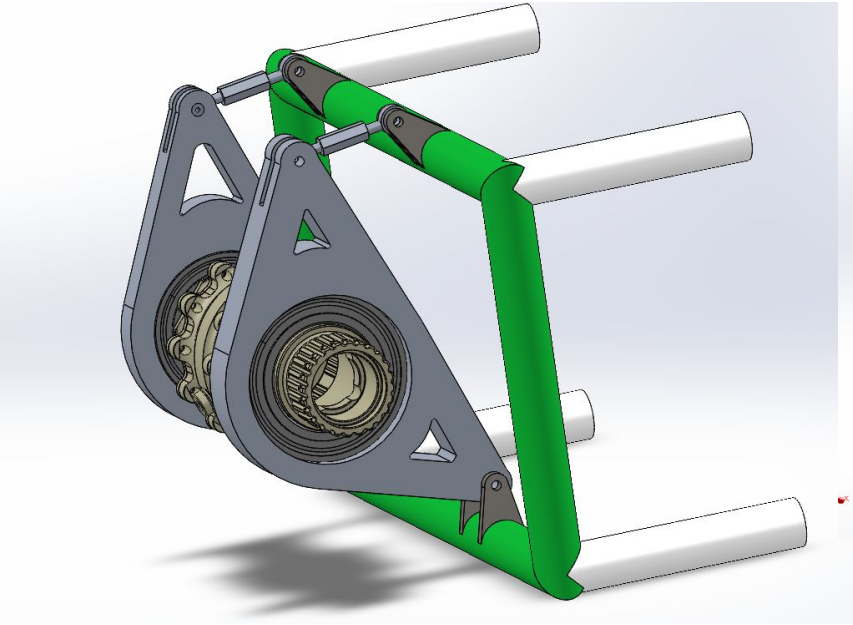

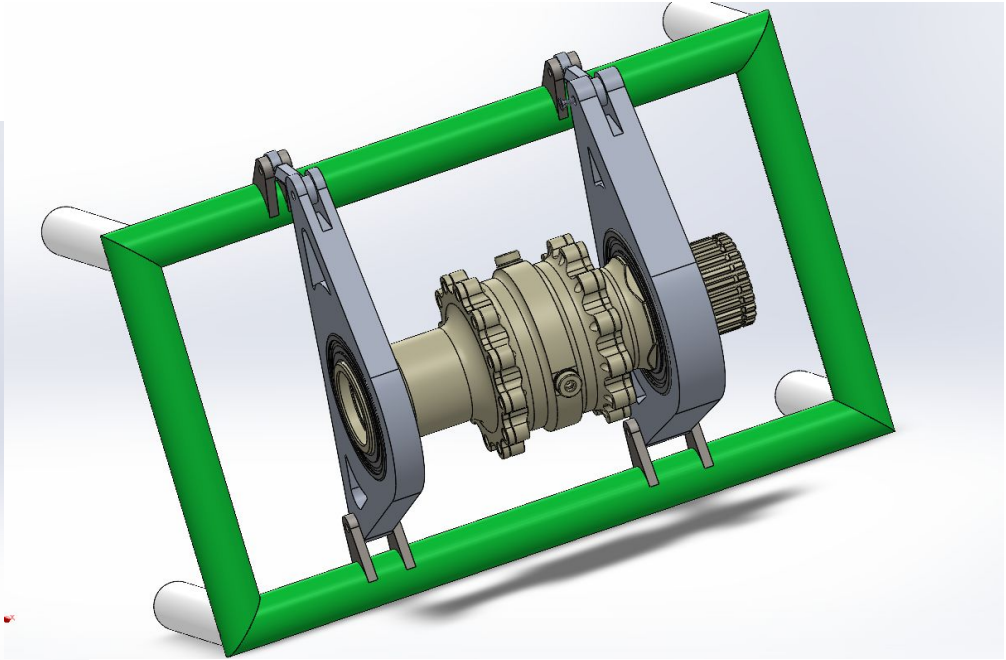

FEA Simulation - Left Plate

Model name: Modified Left Plate
Study name: Static 1(-Default-)
Plot type: Factor of Safety Factor of Safety1
Criterion : Automatic
Factor of safety distribution: Min FOS = 1.5

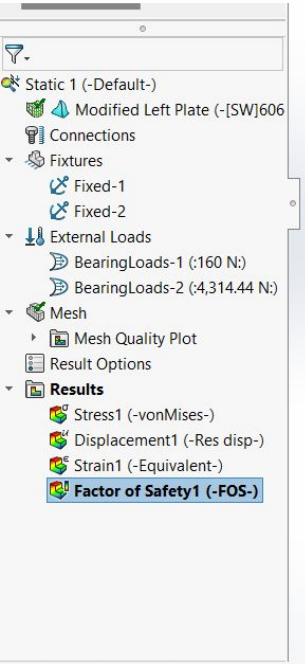

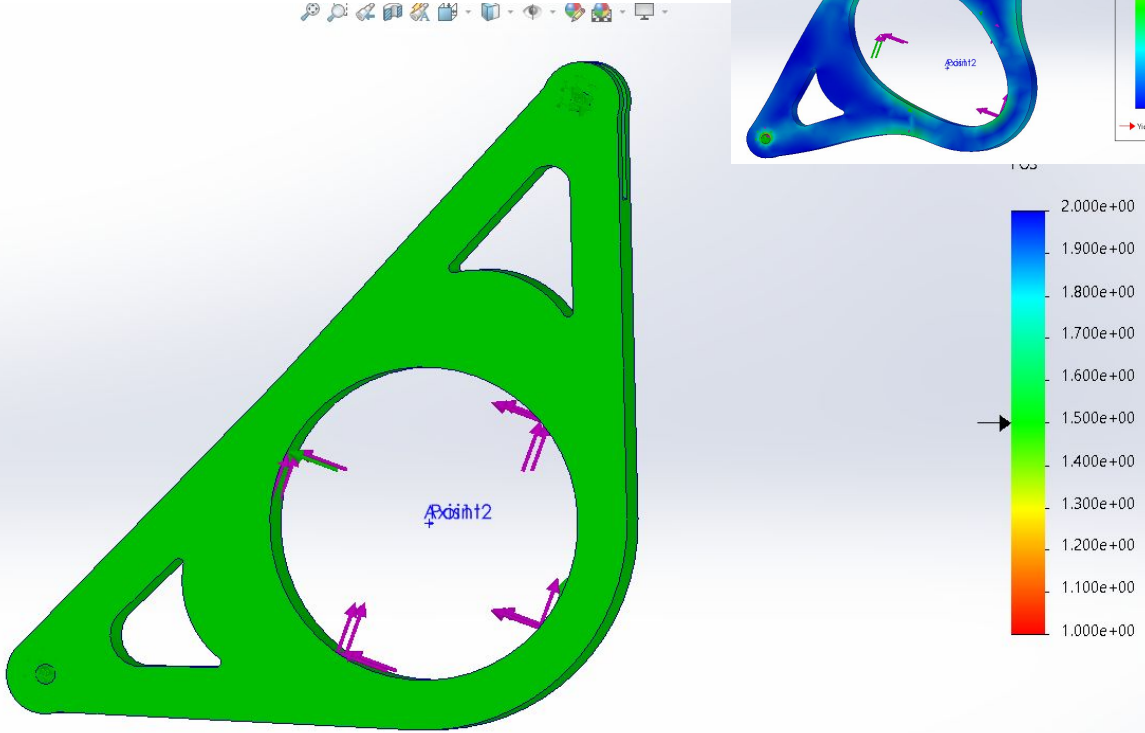

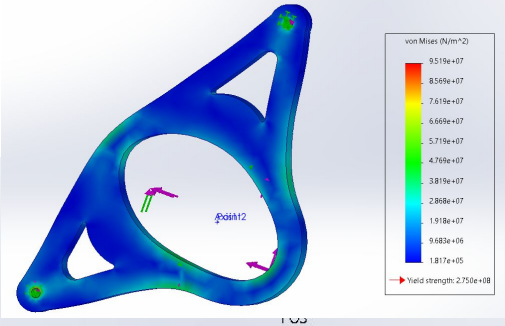

SOLIDWORKS Educational Product. For Instructional Use Only.

FEA Simulation - Modified Right Plate

Model name: Modified Right Plate
Study name: Static 1(-Default-)
Plot type: Factor of Safety Factor of Safety1
Criterion : Automatic
Factor of safety distribution: Min FOS = 1.5

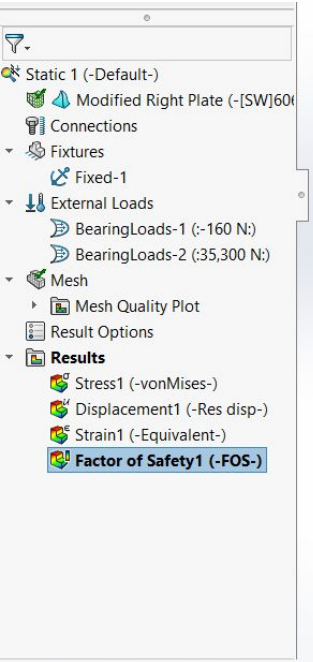

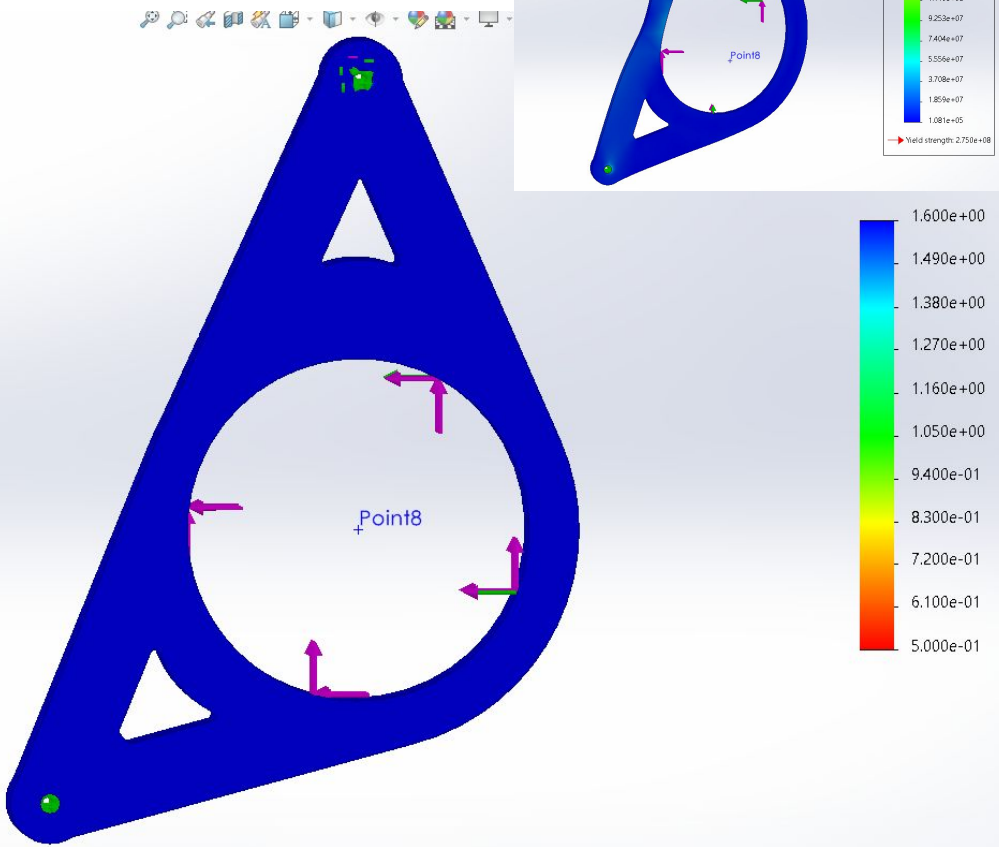

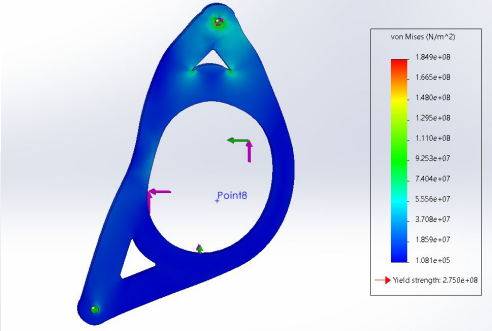

SOLIDWORKS Educational Product. For Instructional Use Only.

Screws

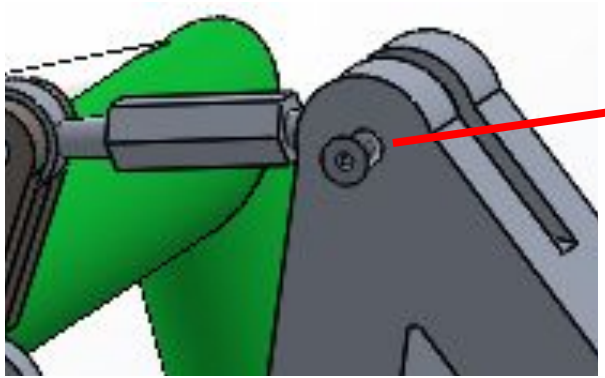

Fully Threaded - $2.92

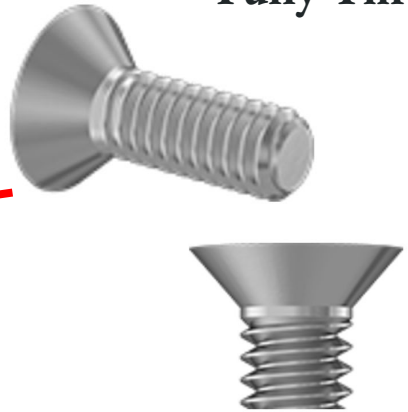

"18-8 Stainless Steel Hex Drive Flat Head Screws"

- Imported from McMaster-Carr
- All holes have a diameter of **0.5** inches
  - For **tabs** + **turnbuckles**
- Screws are good balance of strength & toughness
- Hex drive reduces risk of slippage
- Offers good resistance to corrosion & rust

Jacking Bar Sketch

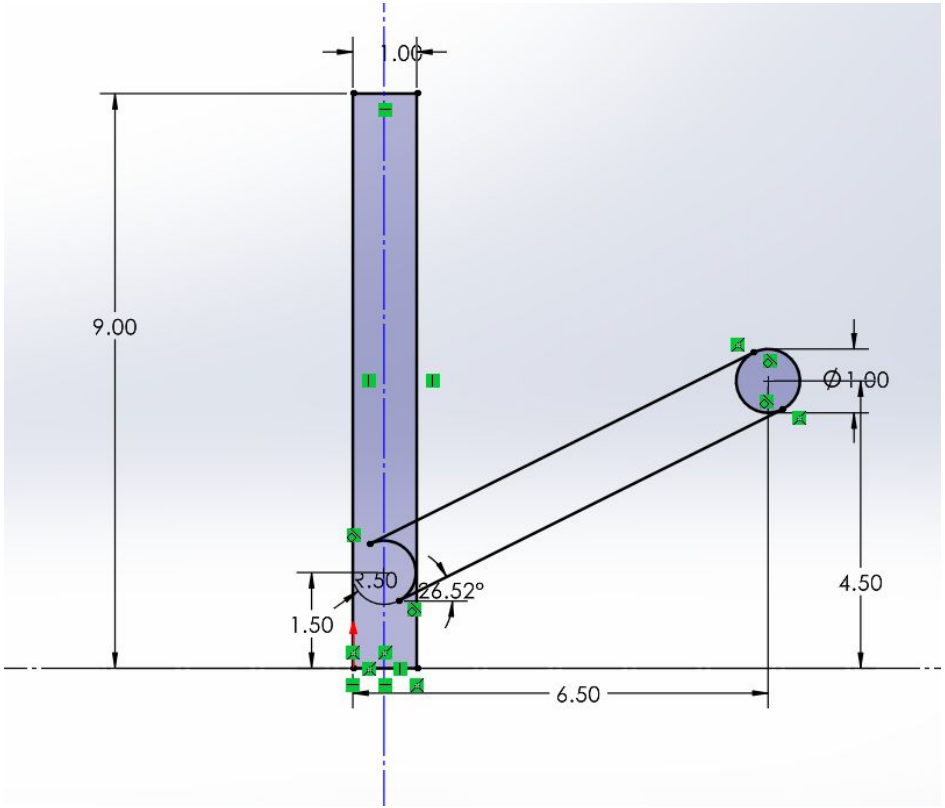

Rules & Restrictions:

- 300mm length unobstructed
  - Made Jacking Bar thickness 12in
- Lateral & Perpendicular to centerline of vehicle
- Well Exposed to a person 1m behind

Jacking Bar - Assembly

AISI 4130 Steel, normalized at 870C

Directly welded onto Chassis

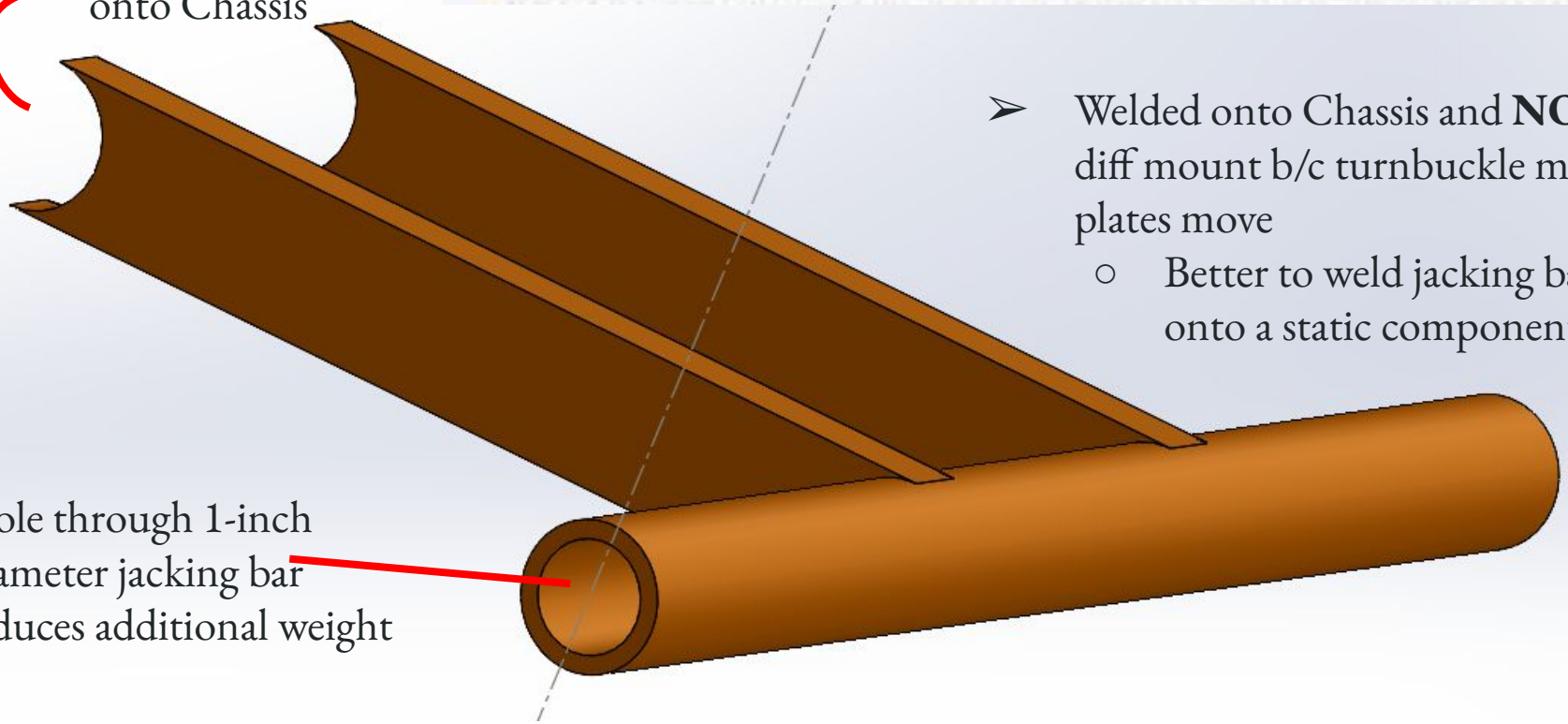

- Welded onto Chassis and **NOT** diff mount b/c turnbuckle makes plates move
  - Better to weld jacking bar onto a static component

Hole through 1-inch diameter jacking bar reduces additional weight

FEA Simulation - Jacking Bar

Model name: Jacking Bar Assembly
Study name: Static 1(-Default-)
Plot type: Factor of Safety Factor of Safety1
Criterion : Automatic
Factor of safety distribution: Min FOS = 5.7

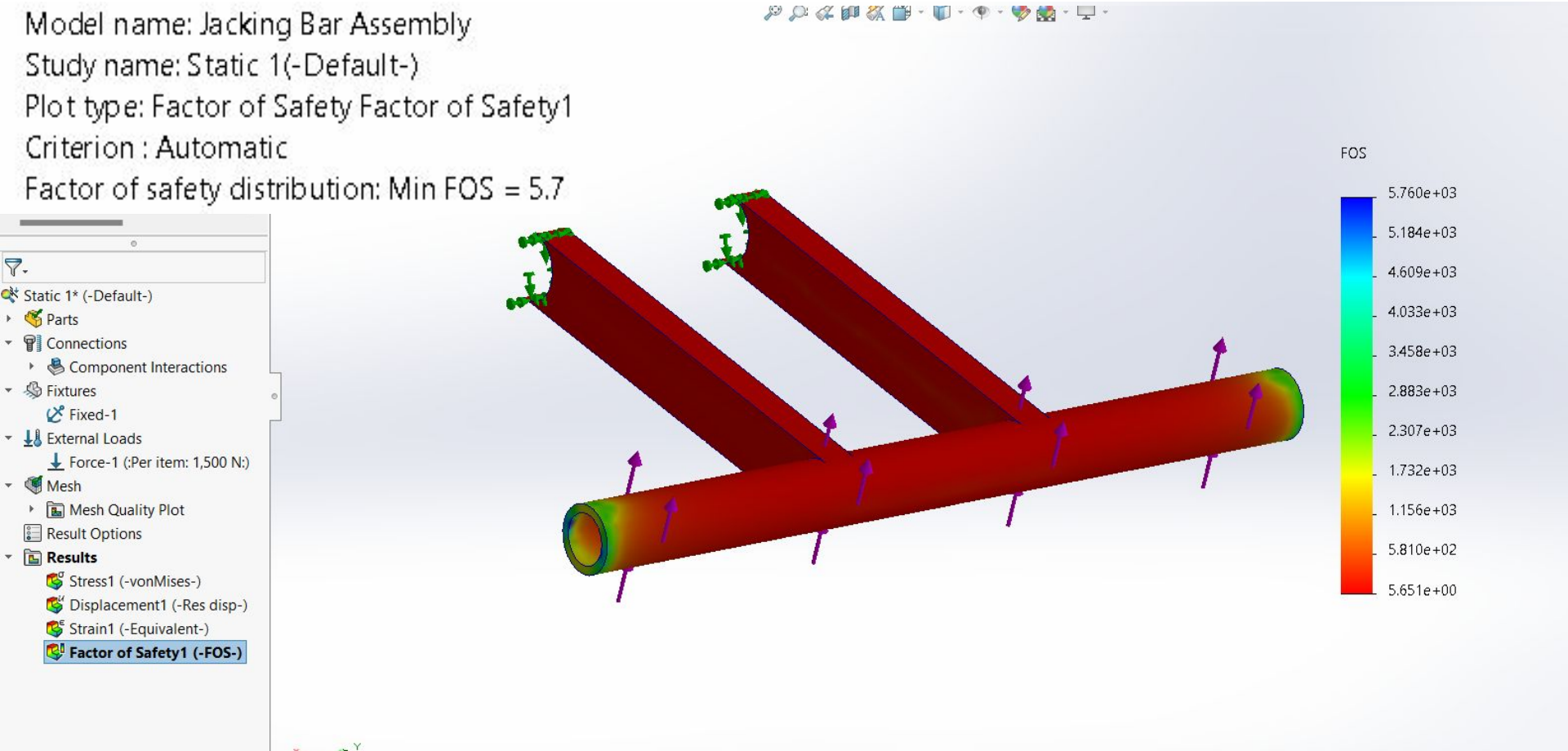

Final Assembly (Diff Mount + Jacking Bar)

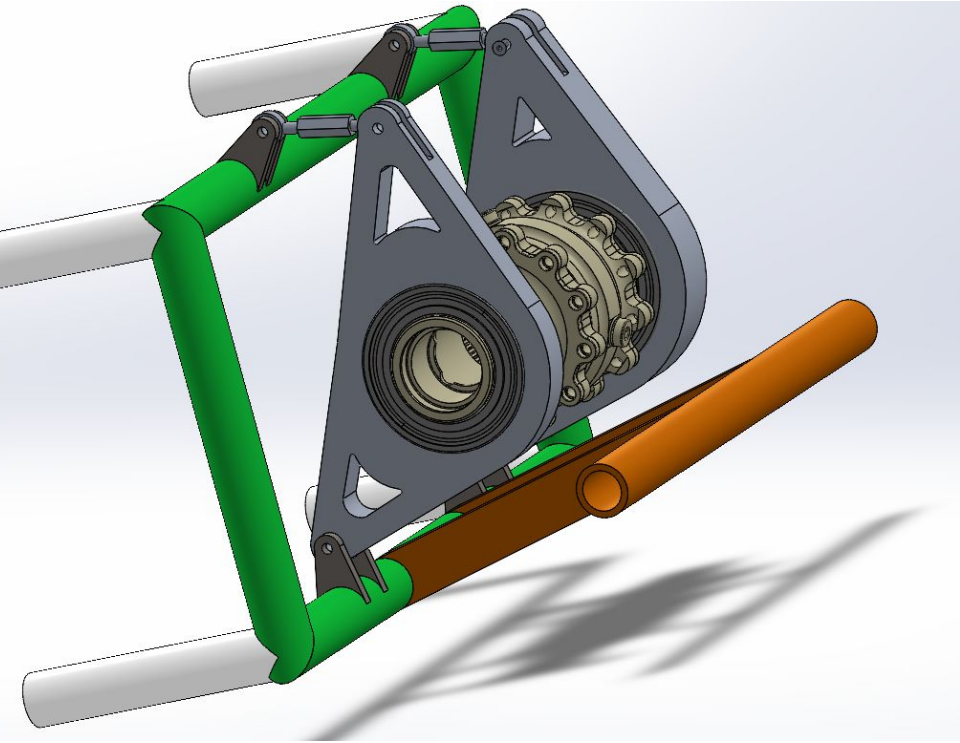

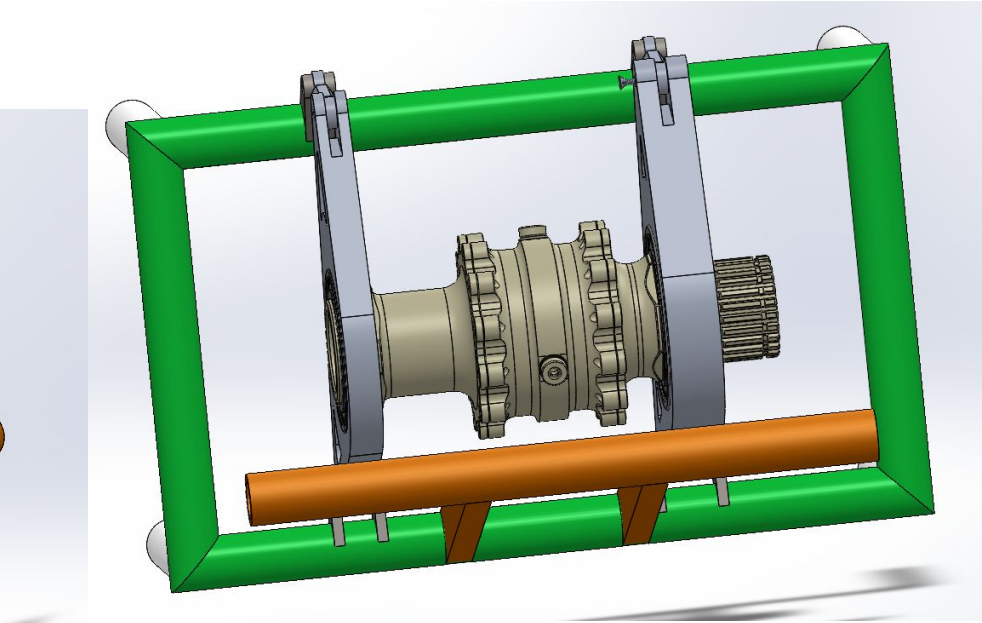

Material Choices

6061-T6 (SS) Aluminum

- Left & Right Plates
- High strength to weight ratio
- Excellent corrosion resistance
- Good machinability
- Standardized and used in various industries

AISI 4130 Steel

- Tabs + Jacking Bar Assembly
- Chassis is a similar grade of Steel
  - Able to **weld** Tabs & Jacking Bar
- High strength steel
  - For Tabs to hold weights much greater than itself
- Good machinability & weldability

Manufacturing + Cost - Diff Plates

6061-T6 Differential Mounting Plates

- CNC Machining (*Top Choice*)
  - Excellent machinability
    - Precise bolt holes & cut-outs
  - Good for tight tolerances -> important for differential loads
  - CNC Machining Cost: $50 - $120 per plate
- Waterjet Cutting
  - 30% cheaper & reduces material waste, *but* needs more machining for precise features

Manufacturing + Cost - Tabs

AISI 4130 Steel Tabs

- Laser Cutting (*Top Choice*)
  - High precision & cost-effective for small steel parts
  - Minimizes material distortion
  - Laser-cut edges have very little heat-affected zones
    - Ideal for welding tabs
  - $5 - $15 per tab
- Plasma cutting
  - Larger heat-affected zone -> weakens ability to weld tabs
- Waterjet Cutting
  - Slower & more expensive for steel

Manufacturing + Cost - Jacking Bar

AISI 4130 Steel Jacking Bar

- Tube Bending (*Top Choice*)
  - Efficient way of shaping AISI 4130 while maintaining strength
    - $10 - $30 per bar
  - Prevents collapse of tubing
  - Maintains uniform thickness
  - Welding to attach parts like mounting brackets or jacking bar on chassis
    - $20 - $50 per bar
- CNC machining or casting
  - Too expensive & inefficient