Electric Guitar Bass Amplifier - Circuit Design Project

By Amrik Verma

Symbolic Expression of Transfer Function

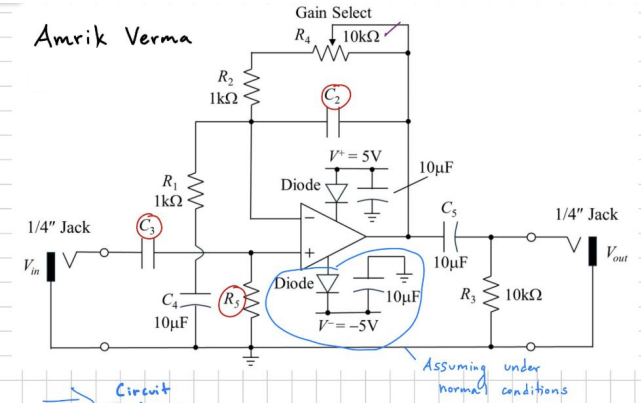

⇒ Circuit Redrawn

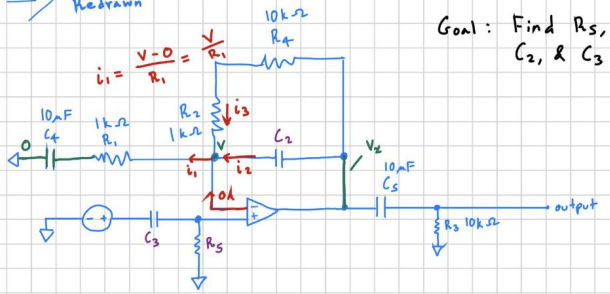

Goal: Find R_5, C_2, & C_3

$$i_2 = \frac{V_x - V}{\frac{1}{j\omega C_2}}$$

$$i_3 = \frac{V_x - V}{R_4 + R_2}$$

$$V_{out} = V_x$$

$$\frac{V_{out}}{V_{in}} = \frac{V_x}{V} \cdot \frac{V}{V_{in}}$$

KCL:

$$i_1 = i_2 + i_3$$

$$\Rightarrow \frac{V}{R_1} = (V_x - V) j\omega C_2 + \frac{V_x - V}{R_4 + R_2}$$

$$V_x = V_{out}$$

Find V_x:

$$\frac{V}{R_1} = (V_x - V)\left[j\omega C_2 + \frac{1}{R_4 + R_2}\right]$$

$$\Rightarrow \frac{V}{R_1} = (V_x - V)\left[\frac{j\omega C_2(R_4 + R_2) + 1}{R_4 + R_2}\right]$$

$$\Rightarrow V_x - V = \frac{R_1}{V} \cdot \frac{R_4 + R_2}{j\omega C_2(R_4 + R_2) + 1}$$

$$\Rightarrow \boxed{V_x = \frac{V(R_4 + R_2)}{R_1\left[j\omega C_2(R_4 + R_2) + 1\right]} + V}$$

Ratio: $$\boxed{\frac{V_x}{V} = \frac{V(R_4 + R_2)}{R_1\left[j\omega C_2(R_4 + R_2) + 1\right]} + 1}$$

Finding V_{in}:

$$V_{in} = \frac{(j\omega C_3 R_5 + 1) \cdot V}{j\omega C_3 R_5}$$

$$\Rightarrow \frac{V_{in}}{V} = \frac{j\omega C_3 R_5 + 1}{j\omega C_3 R_5}$$

$$\Rightarrow \frac{V}{V_{in}} = \frac{j\omega C_3 R_5}{j\omega C_3 R_5 + 1}$$

$$\frac{V_x}{V} = \frac{V(R_4 + R_2)}{R_1\left[j\omega C_2(R_4 + R_2) + 1\right]} + 1$$

$V_x = V_{out}$

$$\frac{V_{out}}{V_{in}} = \frac{V_{out}}{V} \cdot \frac{V}{V_{in}} = \left(\frac{V(R_4 + R_2)}{R_1\left[j\omega C_2(R_4 + R_2) + 1\right]} + 1\right)\left(\frac{j\omega C_3 R_5}{j\omega C_3 R_5 + 1}\right)$$

$$\frac{R_4 + R_2 + R_1\left[j\omega C_2(R_4 + R_2) + 1\right]}{R_1\left[j\omega C_2(R_4 + R_2) + 1\right]}$$

$$\Rightarrow \frac{R_1 + R_2 + R_4 + j\omega C_2 R_1(R_4 + R_2)}{R_1\left[j\omega C_2(R_4 + R_2) + 1\right]}$$

$$\Rightarrow \frac{(R_1 + R_2 + R_4)}{R_1} \cdot \frac{1 + j\omega \cdot \frac{C_2 R_1(R_4 + R_2)}{R_1 + R_2 + R_4}}{1 + j\omega \cdot C_2(R_4 + R_2)}$$

$$\frac{j\omega C_3 R_5}{j\omega C_3 R_5 + 1} = \frac{\cancel{C_3 R_5} \cdot j\omega}{\cancel{C_3 R_5} \cdot \left(j\omega + \frac{1}{C_3 R_5}\right)}$$

$$\Rightarrow \frac{j\omega}{j\omega + \frac{1}{C_3 R_5}} \Rightarrow \frac{j\omega / C_3 R_5}{1 + j\omega / C_3 R_5}$$

C2 = C3 = 9.65 * 10^-10 F

- Closest available: 1000 pF
- (Used 900 pF in LTSpice to adjust circuit to be in range of 300Hz - 15kHz)

R5 = 550kΩ

- Closest available: 470kΩ + 100kΩ in series

$$\underbrace{\frac{(R_1+R_2+R_4)}{R_1}}_{\substack{K \\ \text{(gain)}}} \cdot \frac{1+\dfrac{j\omega}{\dfrac{R_1+R_2+R_4}{C_2R_1(R_4+R_2)}}\Big\}\omega_{z_1}}{1+\dfrac{j\omega}{\dfrac{1}{C_2(R_4+R_2)}}\Big\}\omega_{p_1}} \cdot \frac{j\omega/C_3R_5}{1+j\omega/C_3R_5}\Big\}\omega_{p_2}$$

Between 300 Hz – 15kHz

$$\Rightarrow \quad K \cdot \frac{\left(1+\dfrac{j\omega}{\omega_{z_1}}\right)}{\left(1+\dfrac{j\omega}{\omega_{p_1}}\right)} \cdot \frac{\dfrac{j\omega}{\omega_{p_2}}}{\left(1+\dfrac{j\omega}{\omega_{p_2}}\right)}$$

$$\frac{1}{C_3R_5} = (300)\cdot(2\pi)$$

Given Values:

$R_2 = 1k\Omega$

$R_4 = 10k\Omega$

*Assumption

Letting $C_3 = C_2$: $\dfrac{1}{C_2(R_2+R_4)} = 2\pi(15{,}000)$

$$\Rightarrow \frac{1}{C_3(R_2+R_4)} = 2\pi(15{,}000)$$

$$\Rightarrow C_3 = \frac{1}{2\pi(15{,}000)(R_2+R_4)}$$

$$\Rightarrow C_3 = \frac{1}{2\pi(15{,}000)(1000+10{,}000)}$$

$$\Rightarrow \boxed{C_2 = C_3 = 9.65\times10^{-10}\,F}$$

$$R_5 = \frac{1}{C_3(300)(2\pi)}$$

$$\Rightarrow R_5 = \frac{1}{(9.65\times10^{-10})(300)(2\pi)} \Rightarrow R_5 \approx 550{,}000\,\Omega$$

$$\Rightarrow \boxed{R_5 \approx 550k\Omega}$$

Circuit schematic on LTSpice

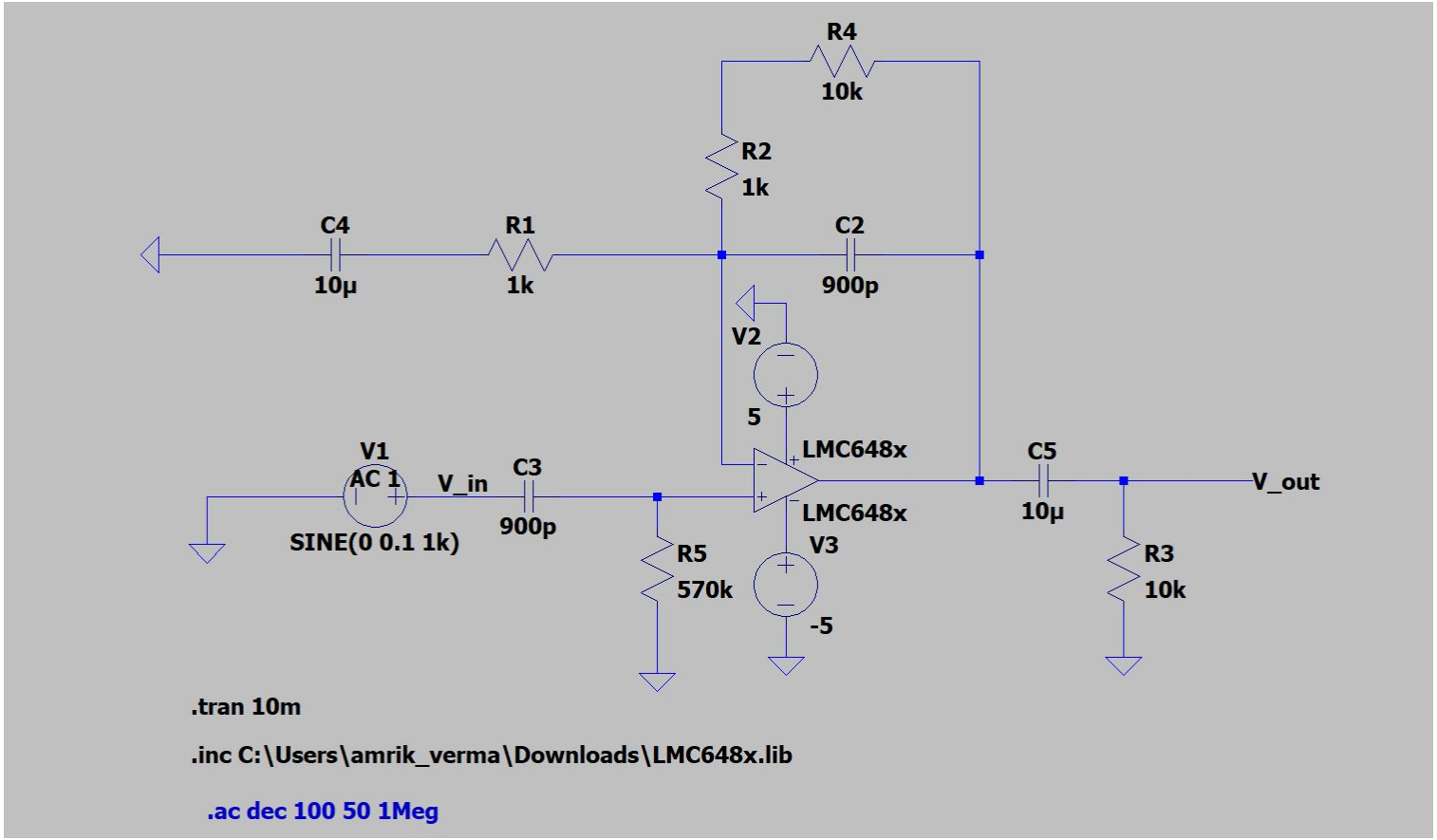

Time Domain Plot

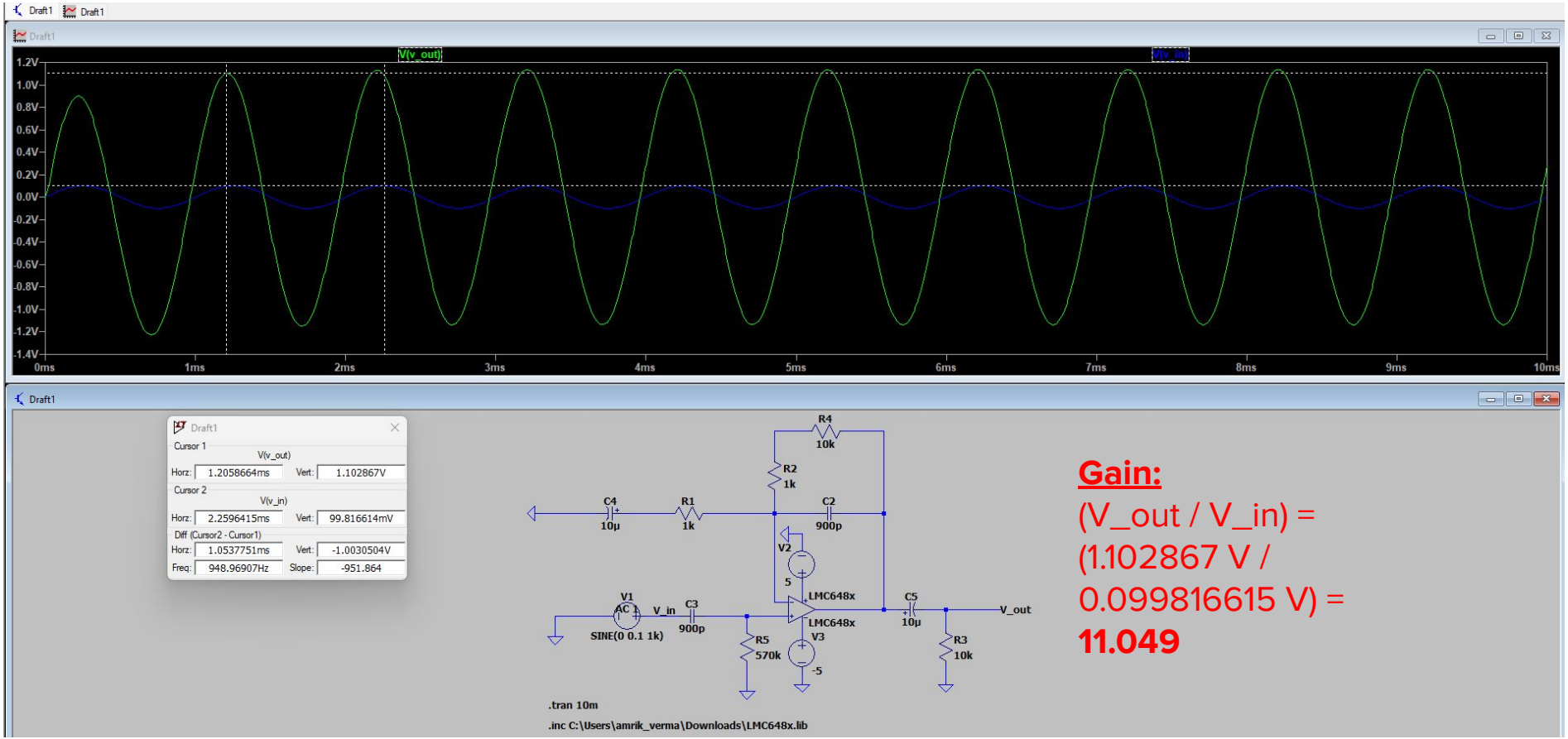

Gain:

(V_out / V_in) = (1.102867 V / 0.099816615 V) = **11.049**

Frequency Domain Plot (-3dB Low Cut-Off ≈ 300 Hz)

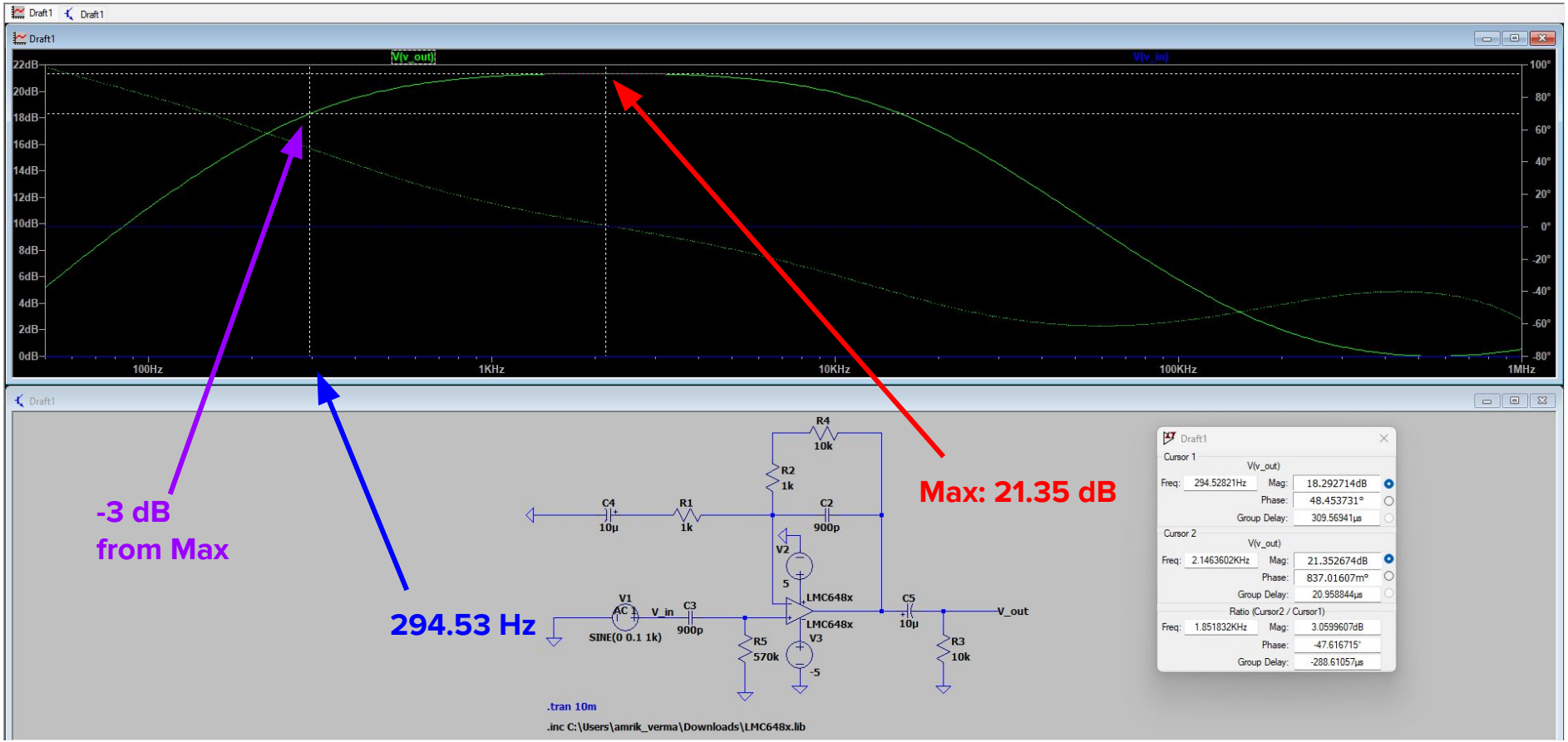

Frequency Domain Plot (+3dB High Cut-Off ≈ 15kHz)

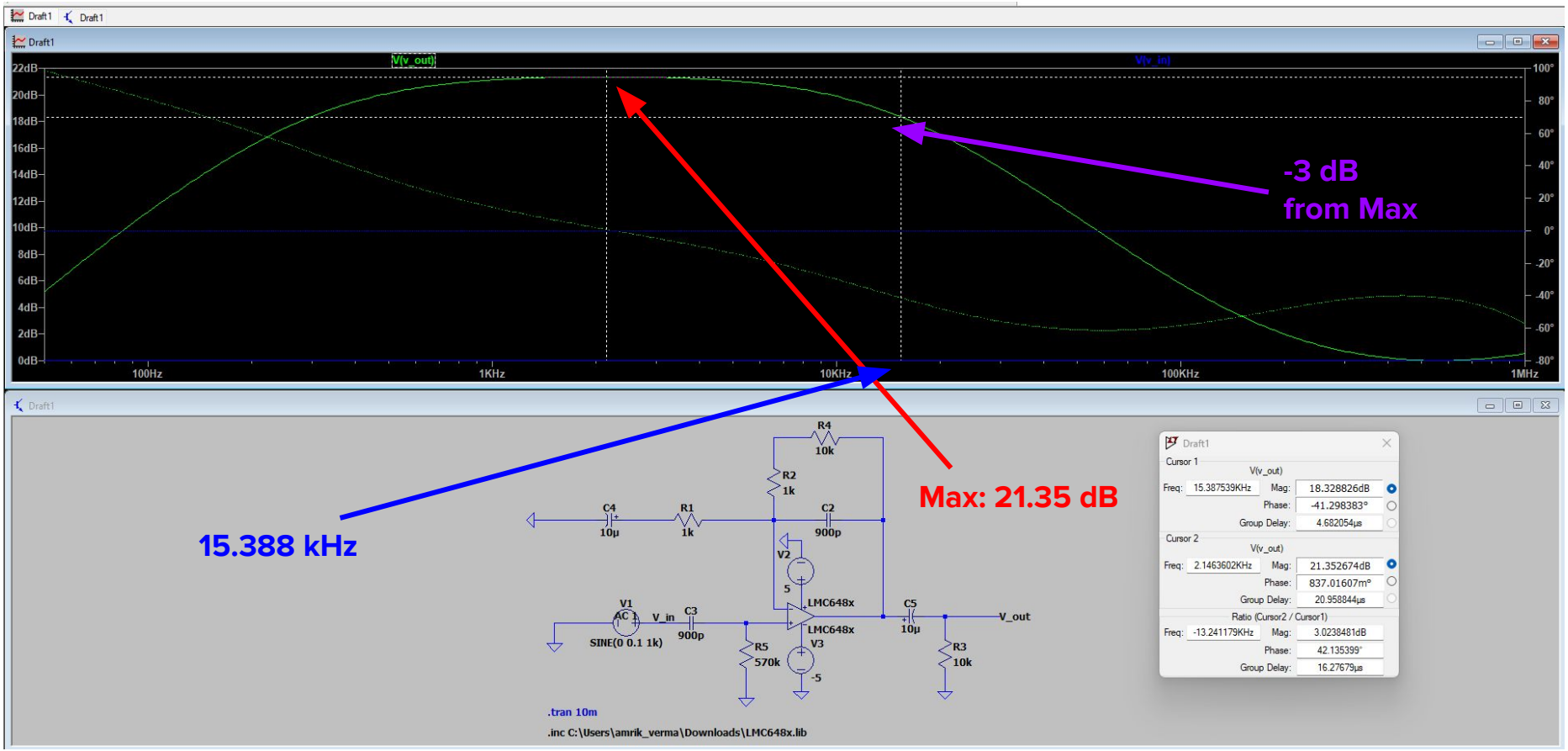

Circuit on Breadboard

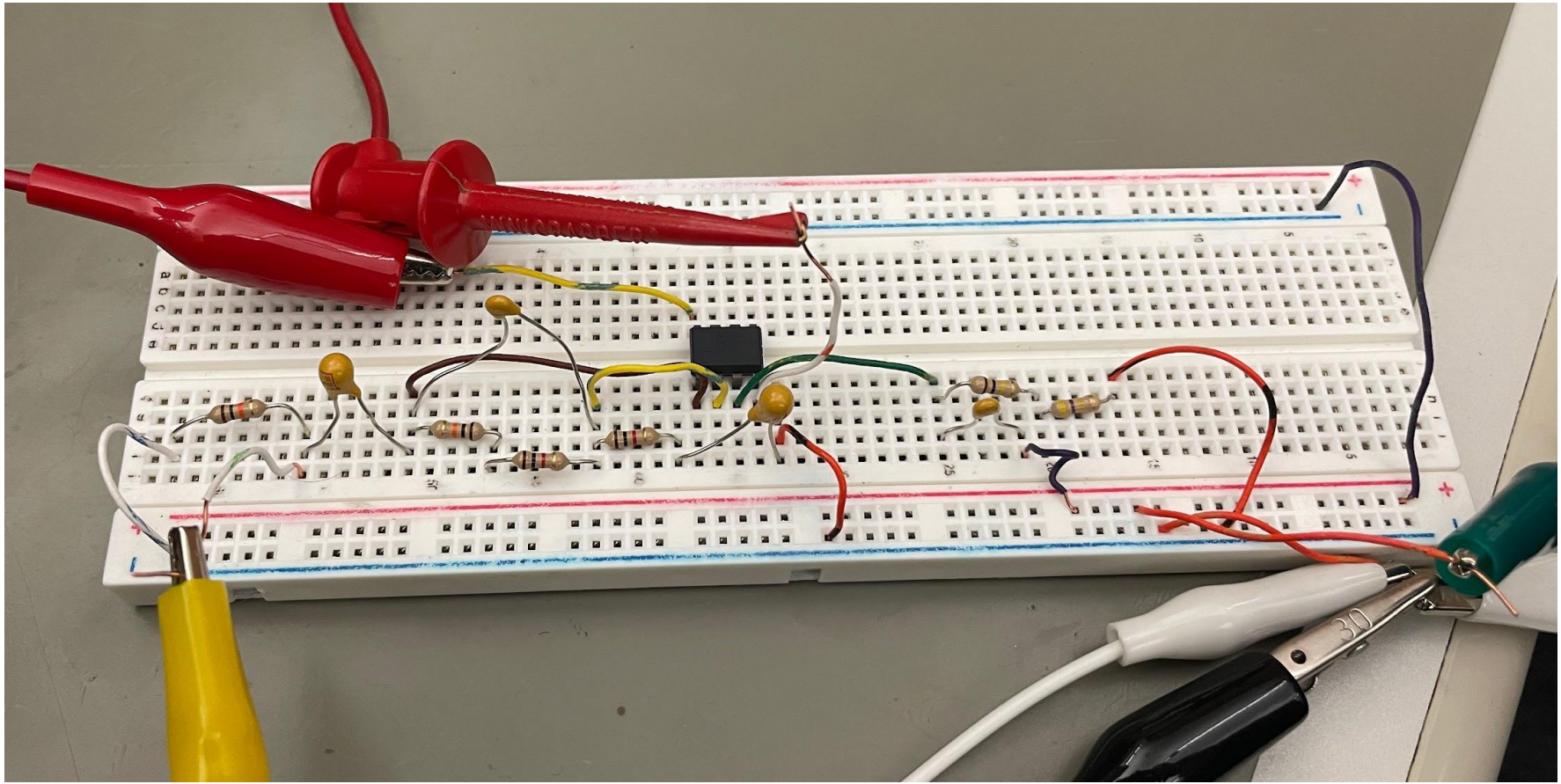

Oscilloscope (300Hz - 15kHz)

	Name	Value
C1	Maximum	104.08 mV
C2	Maximum	1.1814 V

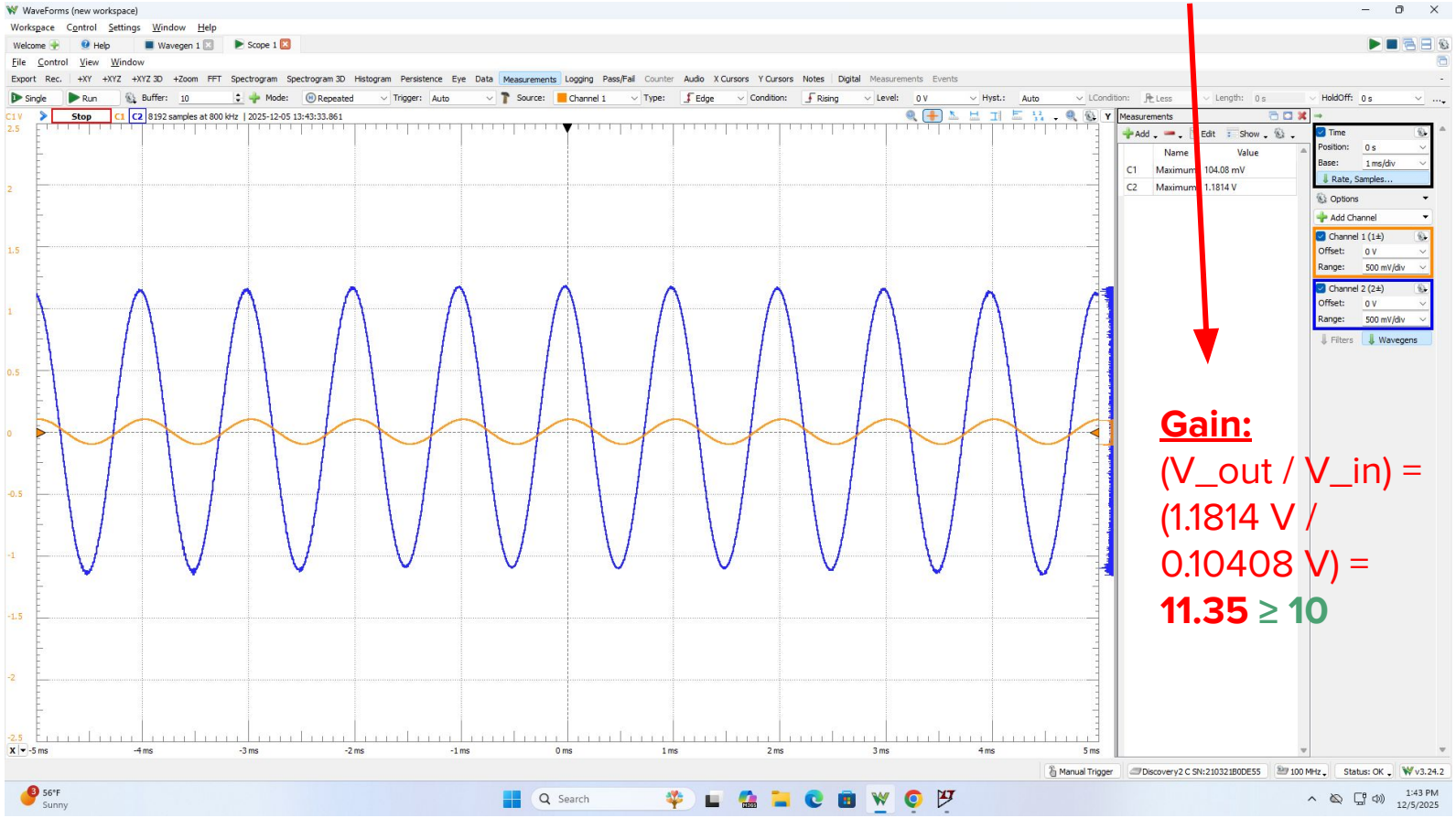

Gain:

(V_out / V_in) = (1.1814 V / 0.10408 V) = **11.35 ≥ 10**

Oscilloscope (< 300 Hz)

	Name	Value
C1	Maximum	104.08 mV
C2	Maximum	0.65998 V

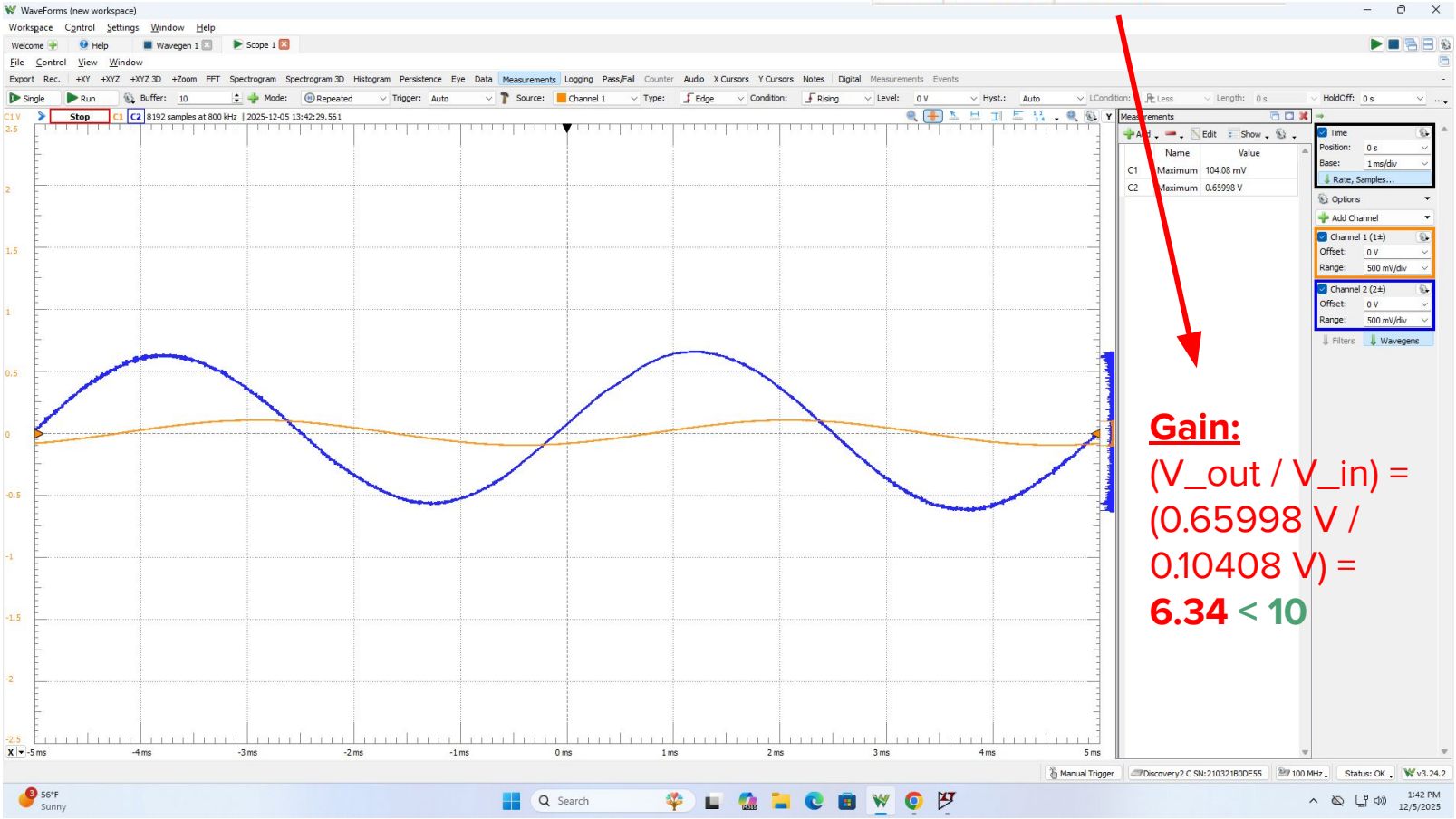

Gain:

(V_out / V_in) = (0.65998 V / 0.10408 V) = **6.34** < 10

Oscilloscope (> 15 kHz)

	Name	Value
C1	Maximum	104.73 mV
C2	Maximum	0.82935 V

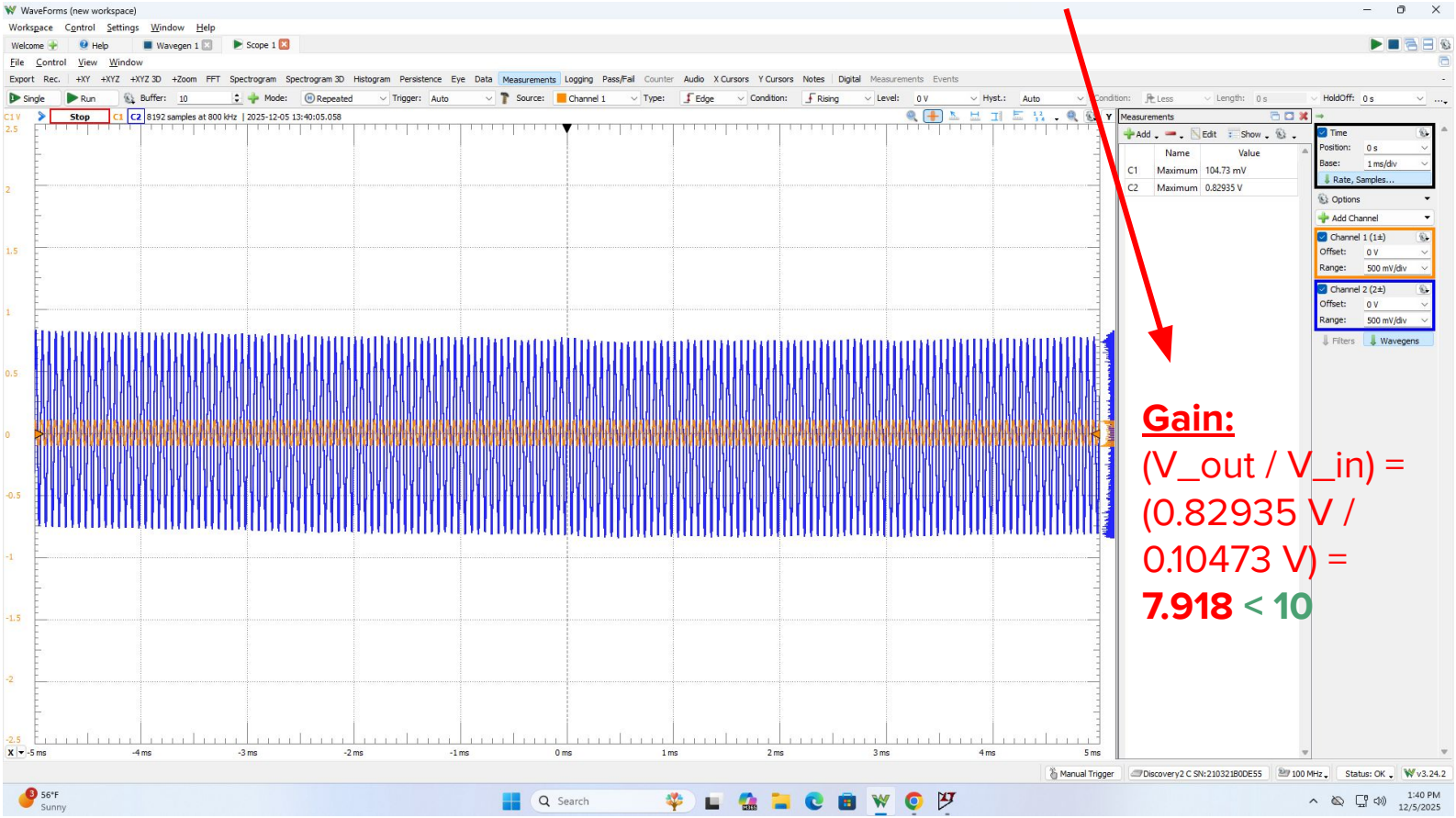

Gain:

(V_out / V_in) = (0.82935 V / 0.10473 V) = **7.918** < 10

Bode Plot (Amplitude & Phase)

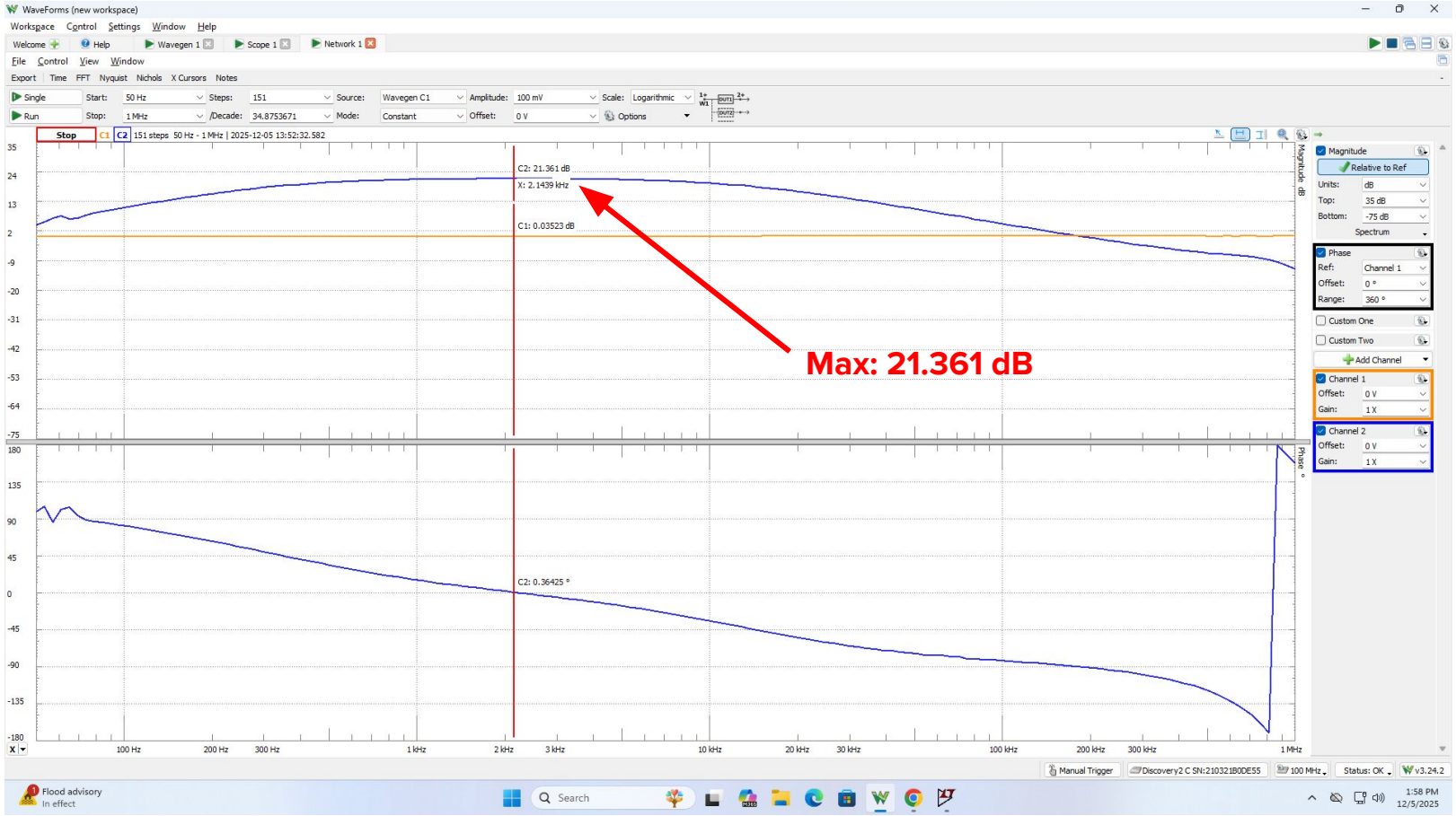

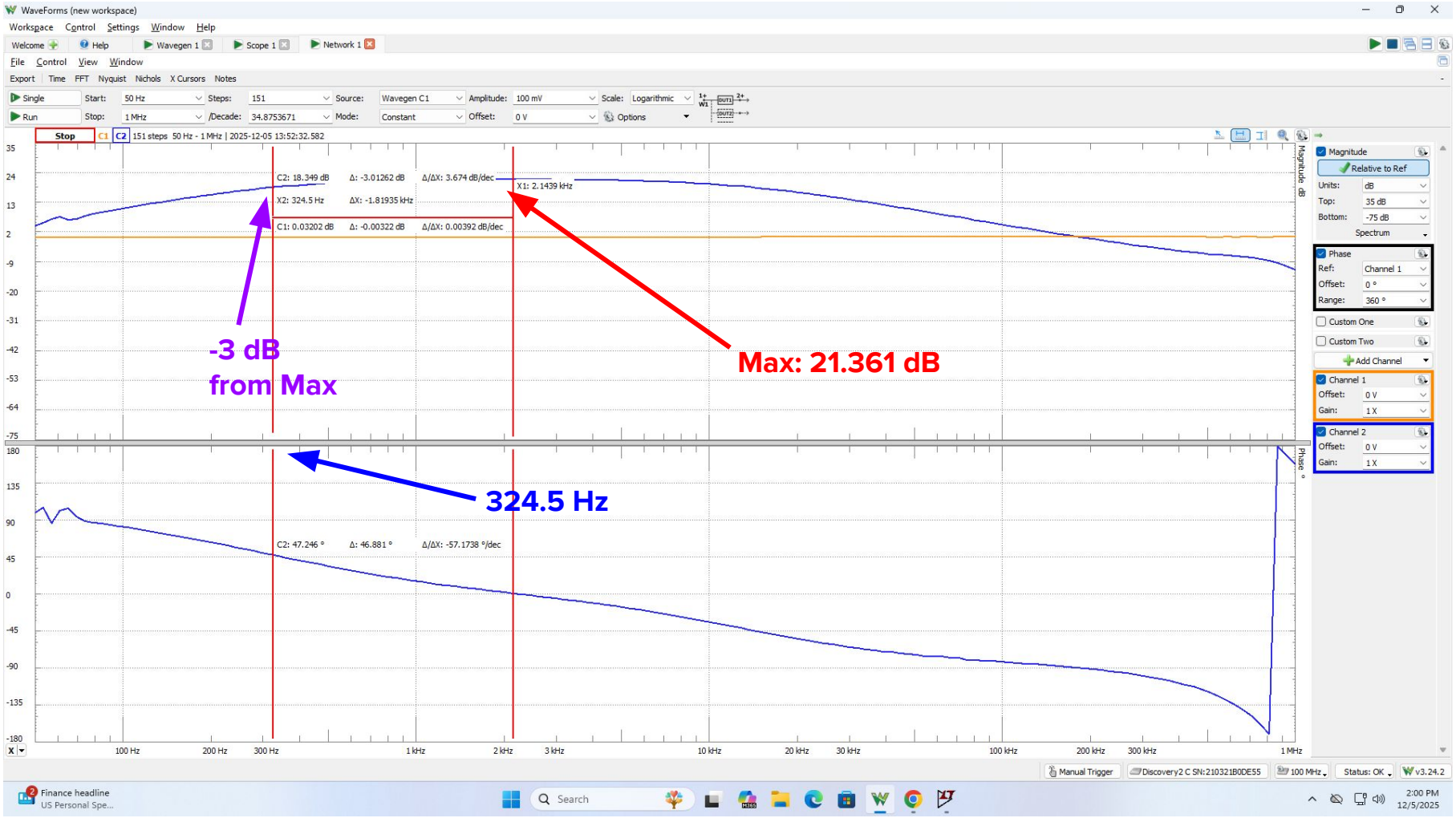
WaveForms (new workspace)
Workspace Control Settings Window Help
Welcome Help Wavegen 1 Scope 1 Network 1
File Control View Window
Export Time FFT Nyquist Nichols X Cursors Notes
Single Start: 50 Hz Steps: 151 Source: Wavegen C1 Amplitude: 100 mV Scale: Logarithmic
Run Stop: 1 MHz /Decade: 34.8753671 Mode: Constant Offset: 0 V Options
Stop C1 C2 151 steps 50 Hz - 1 MHz | 2025-12-05 13:52:32.582
C2: 18.349 dB Δ: -3.01262 dB Δ/ΔX: 3.674 dB/dec
X2: 324.5 Hz ΔX: -1.81935 kHz
X1: 2.1439 kHz
C1: 0.03202 dB Δ: -0.00322 dB Δ/ΔX: 0.00392 dB/dec
-3 dB
from Max
Max: 21.361 dB
324.5 Hz
C2: 47.246 ° Δ: 46.881 ° Δ/ΔX: -57.1738 °/dec
Magnitude dB
Phase °
Magnitude
Relative to Ref
Units: dB
Top: 35 dB
Bottom: -75 dB
Spectrum
Phase
Ref: Channel 1
Offset: 0 °
Range: 360 °
Custom One
Custom Two
Add Channel
Channel 1
Offset: 0 V
Gain: 1 X
Channel 2
Offset: 0 V
Gain: 1 X
100 Hz 200 Hz 300 Hz 1 kHz 2 kHz 3 kHz 10 kHz 20 kHz 30 kHz 100 kHz 200 kHz 300 kHz 1 MHz
Manual Trigger
Discovery2 C SN:210321B0DE55
100 MHz
Status: OK
v3.24.2
Finance headline
US Personal Spe...
Search
2:00 PM
12/5/2025

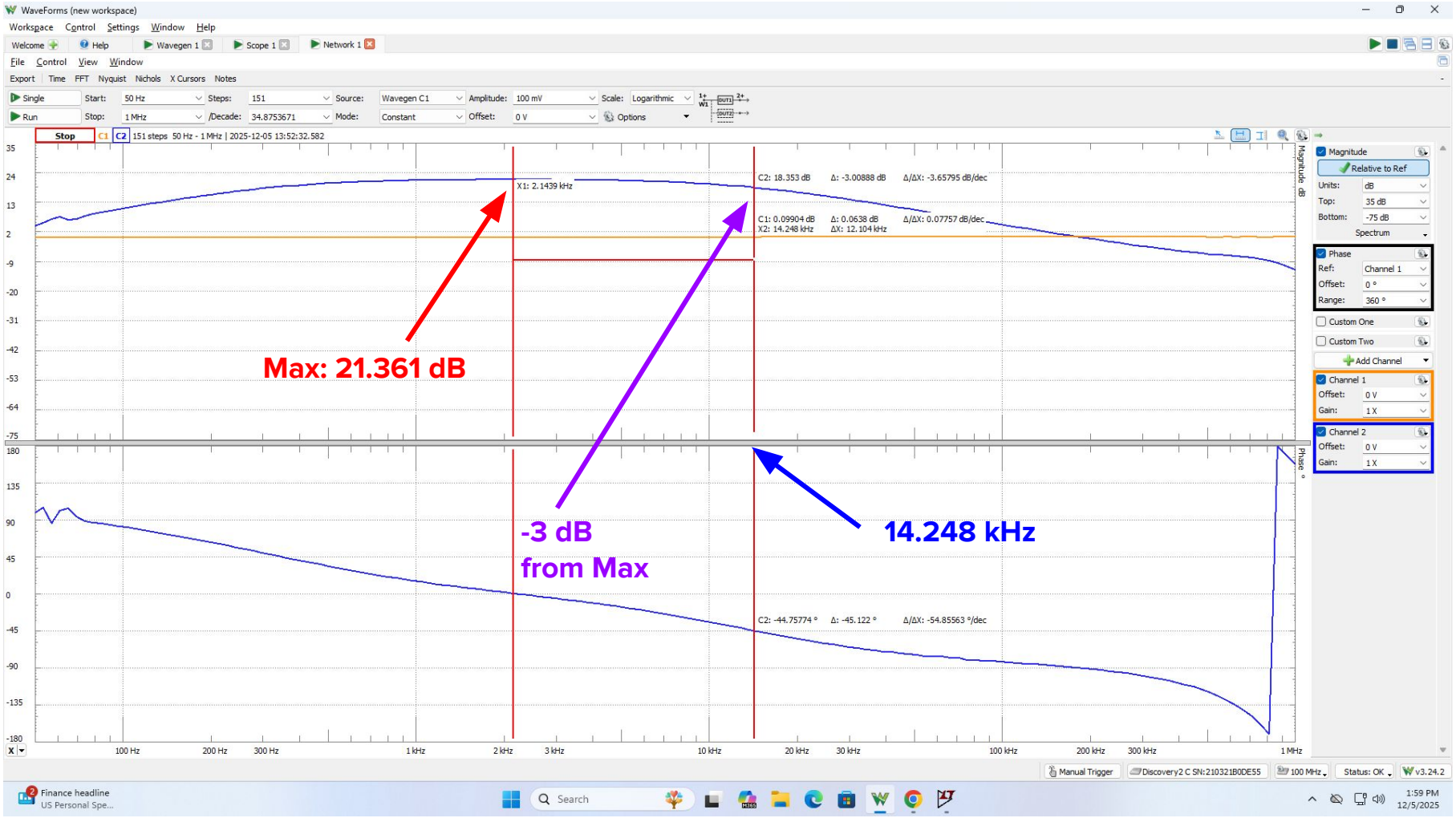
WaveForms (new workspace)
Workspace Control Settings Window Help
Welcome Help Wavegen 1 Scope 1 Network 1
File Control View Window
Export Time FFT Nyquist Nichols X Cursors Notes
Single Start: 50 Hz Steps: 151 Source: Wavegen C1 Amplitude: 100 mV Scale: Logarithmic
Run Stop: 1 MHz /Decade: 34.8753671 Mode: Constant Offset: 0 V Options
Stop C1 C2 151 steps 50 Hz - 1 MHz | 2025-12-05 13:52:32.582
X1: 2.1439 kHz
C2: 18.353 dB Δ: -3.00888 dB Δ/ΔX: -3.65795 dB/dec
C1: 0.09904 dB Δ: 0.0638 dB Δ/ΔX: 0.07757 dB/dec
X2: 14.248 kHz ΔX: 12.104 kHz
Max: 21.361 dB
-3 dB
from Max
14.248 kHz
C2: -44.75774 ° Δ: -45.122 ° Δ/ΔX: -54.85563 °/dec
Magnitude dB
Phase °
Magnitude
Relative to Ref
Units: dB
Top: 35 dB
Bottom: -75 dB
Spectrum
Phase
Ref: Channel 1
Offset: 0 °
Range: 360 °
Custom One
Custom Two
Add Channel
Channel 1
Offset: 0 V
Gain: 1 X
Channel 2
Offset: 0 V
Gain: 1 X
100 Hz 200 Hz 300 Hz 1 kHz 2 kHz 3 kHz 10 kHz 20 kHz 30 kHz 100 kHz 200 kHz 300 kHz 1 MHz
Manual Trigger
Discovery2 C SN:210321B0DE55
100 MHz
Status: OK
v3.24.2
Finance headline
US Personal Spe...
Search
1:59 PM
12/5/2025

Comparison

	Designed (Hand Calculations)	**Simulated** (LTSpice)	**Achieved** (Waveform Results + Guitar)
Cut-off Frequencies	Low: 300 Hz High: 15 kHz	Low: 294.53 Hz High: 15.388 kHz	Low: 324.5 Hz High: 14.248 kHz
Gain	≥ 10	11.049	11.35
Notes	Calculated values: C2 = C3 = 9.65 * 10^-10 F R5 = 570 kΩ	Used C2 = C3 = 900 pF in simulation Lowering C2/C3 got us a better cut-off frequency range	Got very close to the low & high cut-off frequency range Shows that our values were pretty accurate for R5, C2, & C3 Guitar sounds distorted like for Rock Music