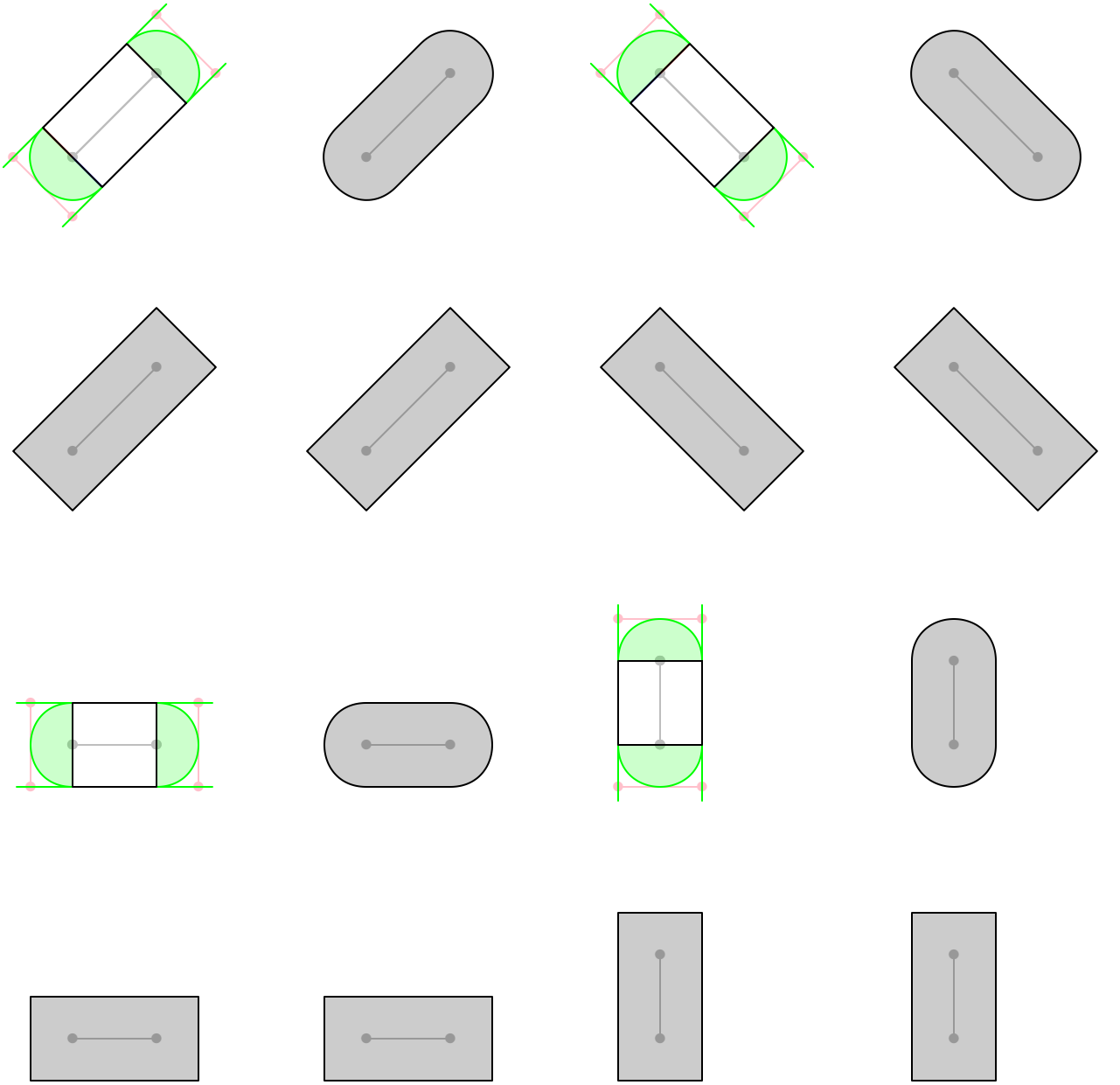

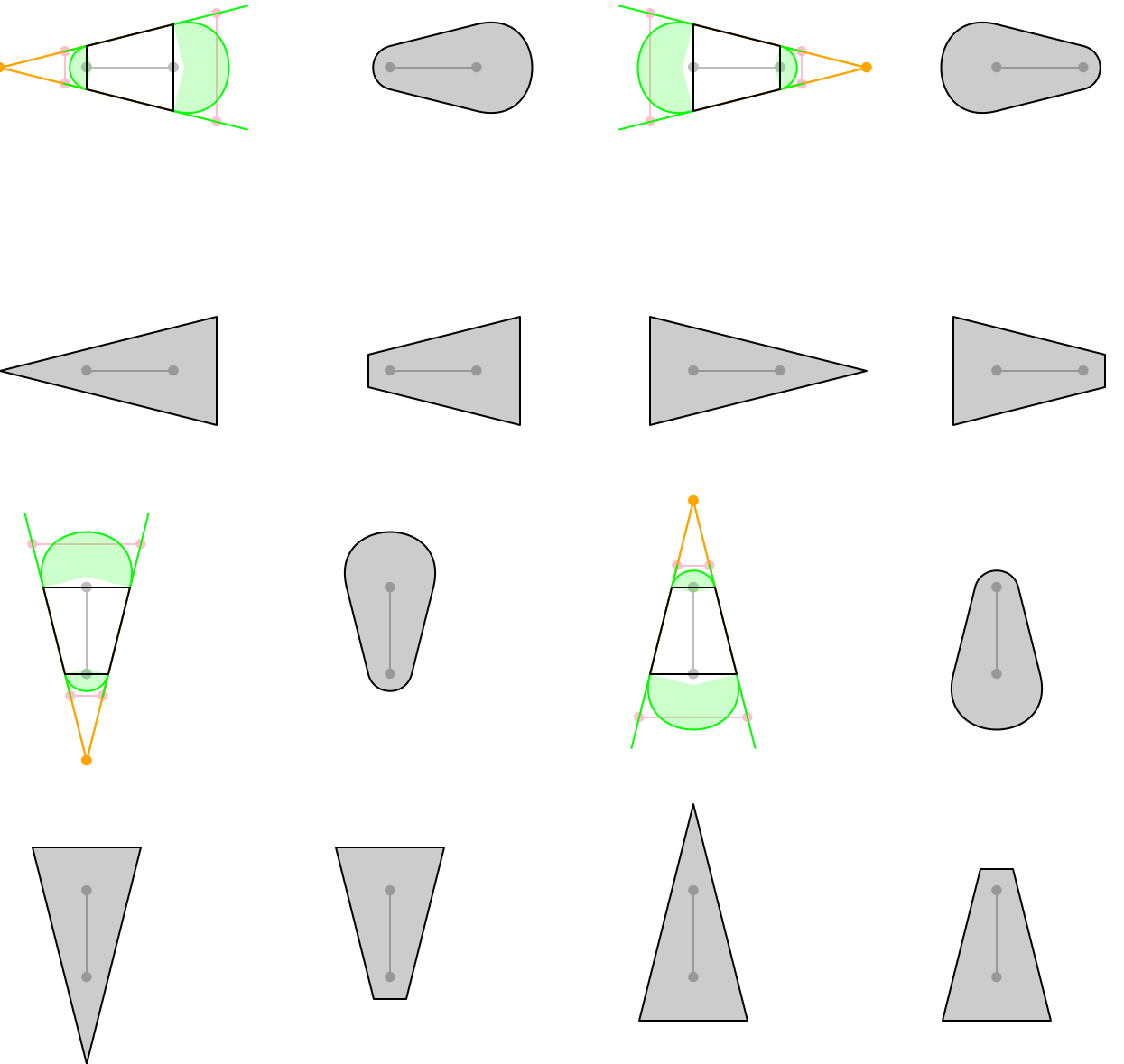

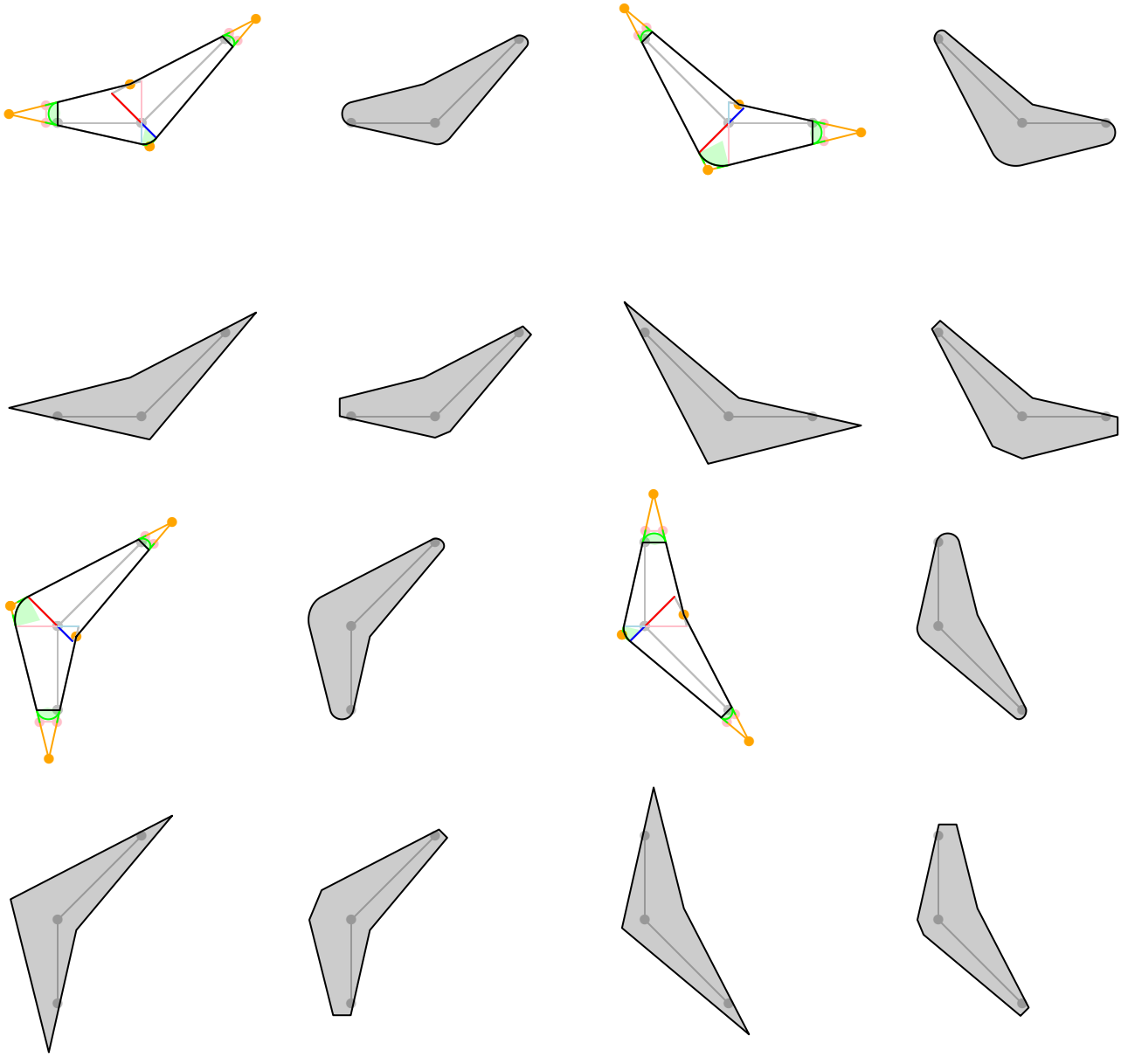

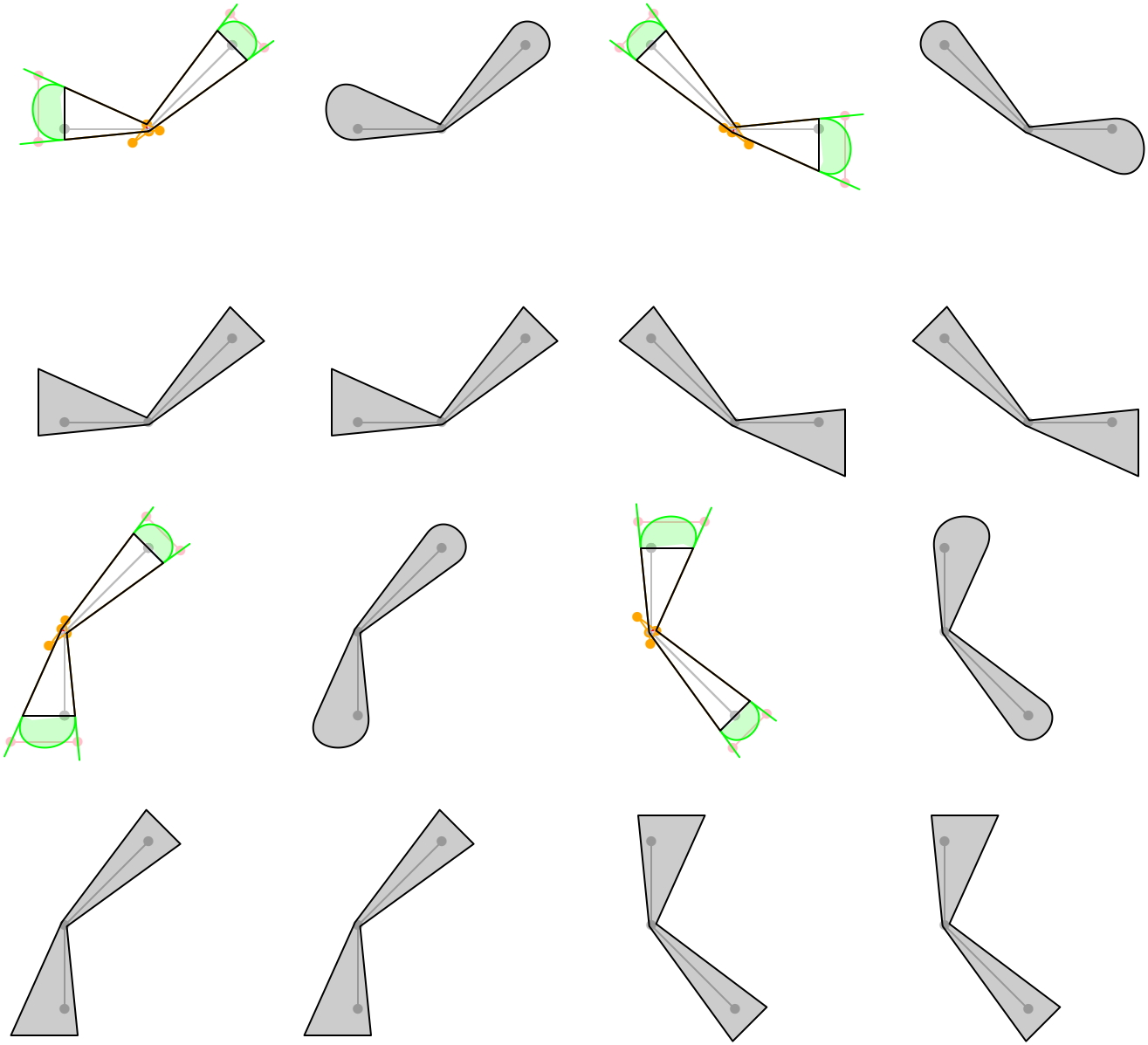

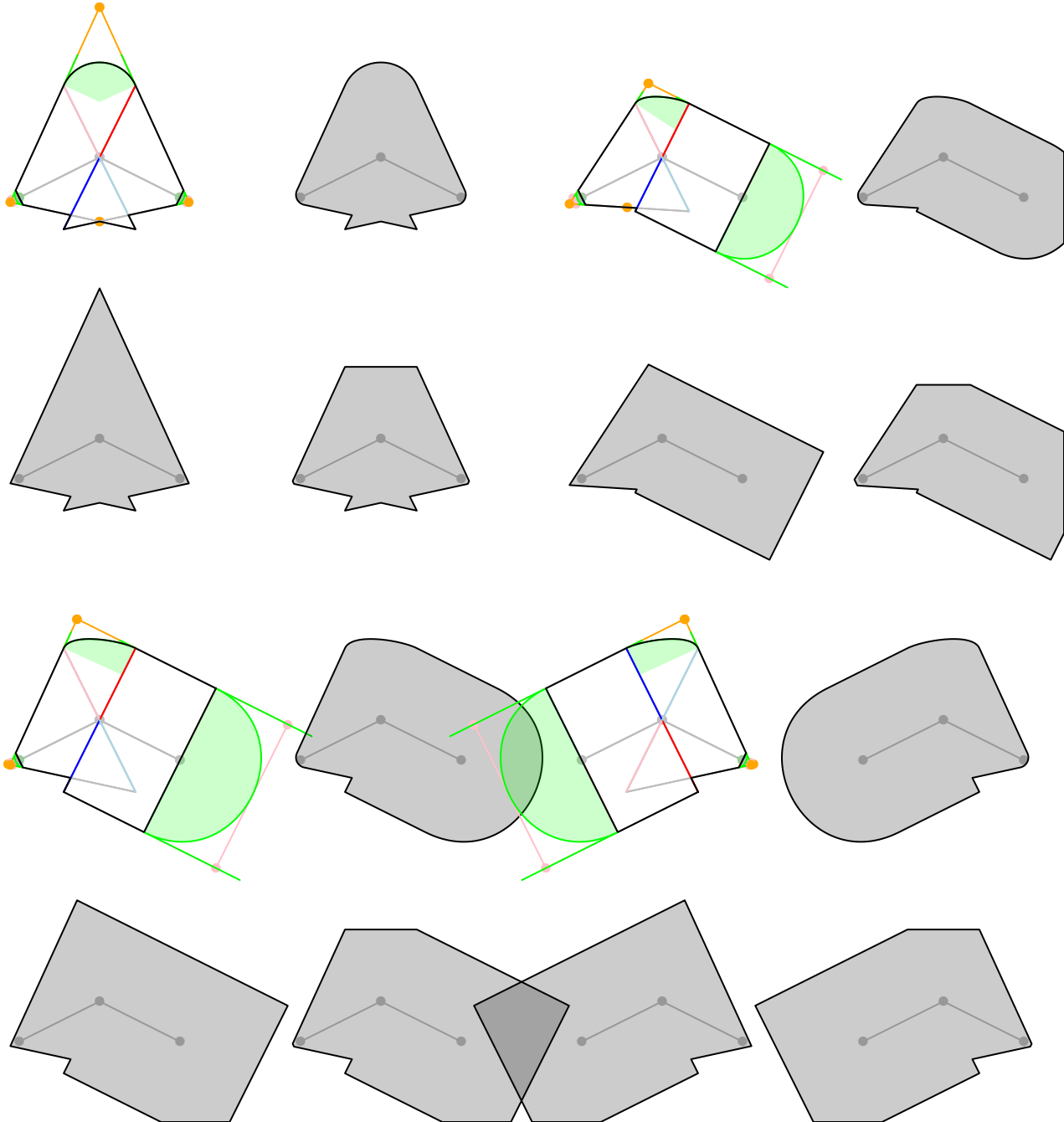

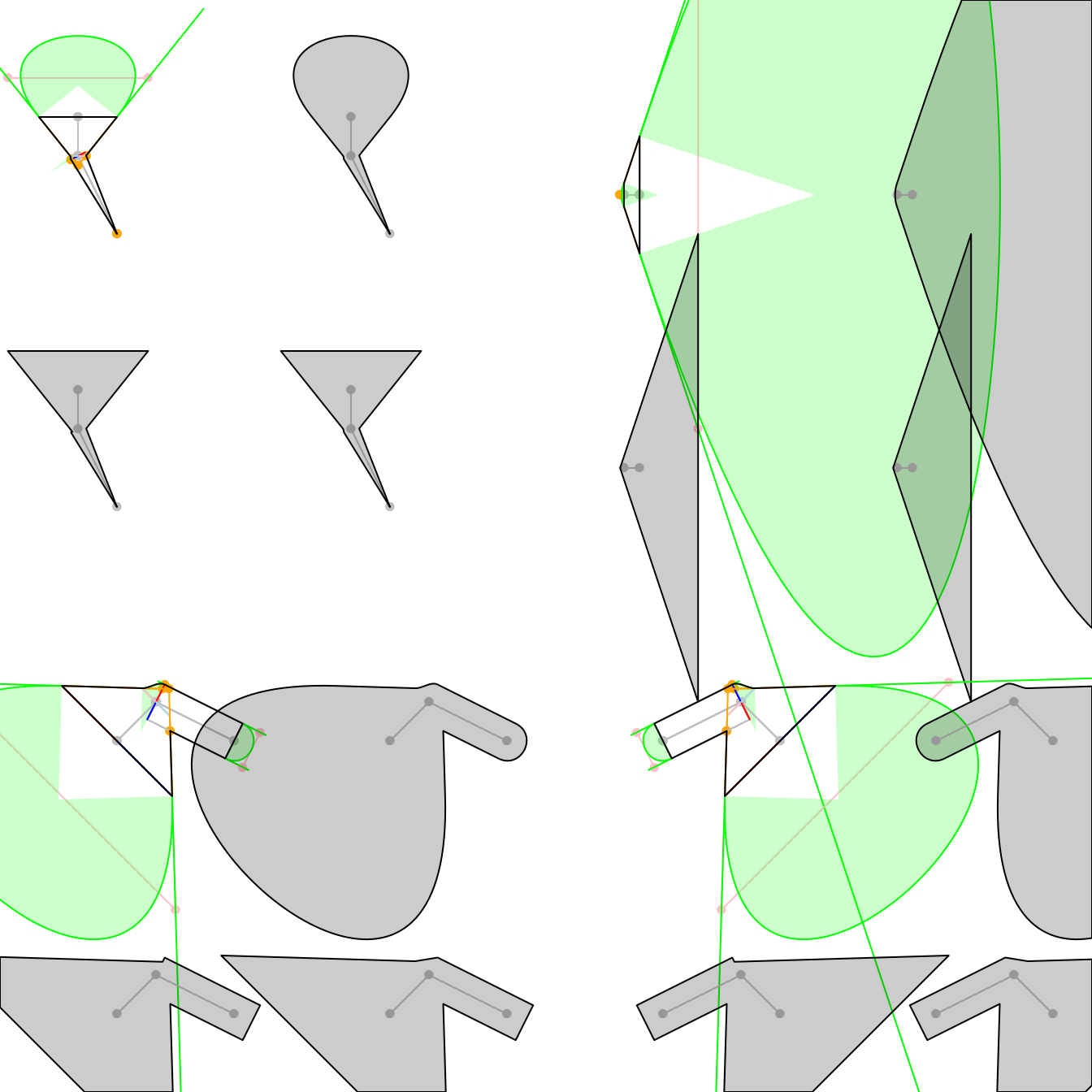

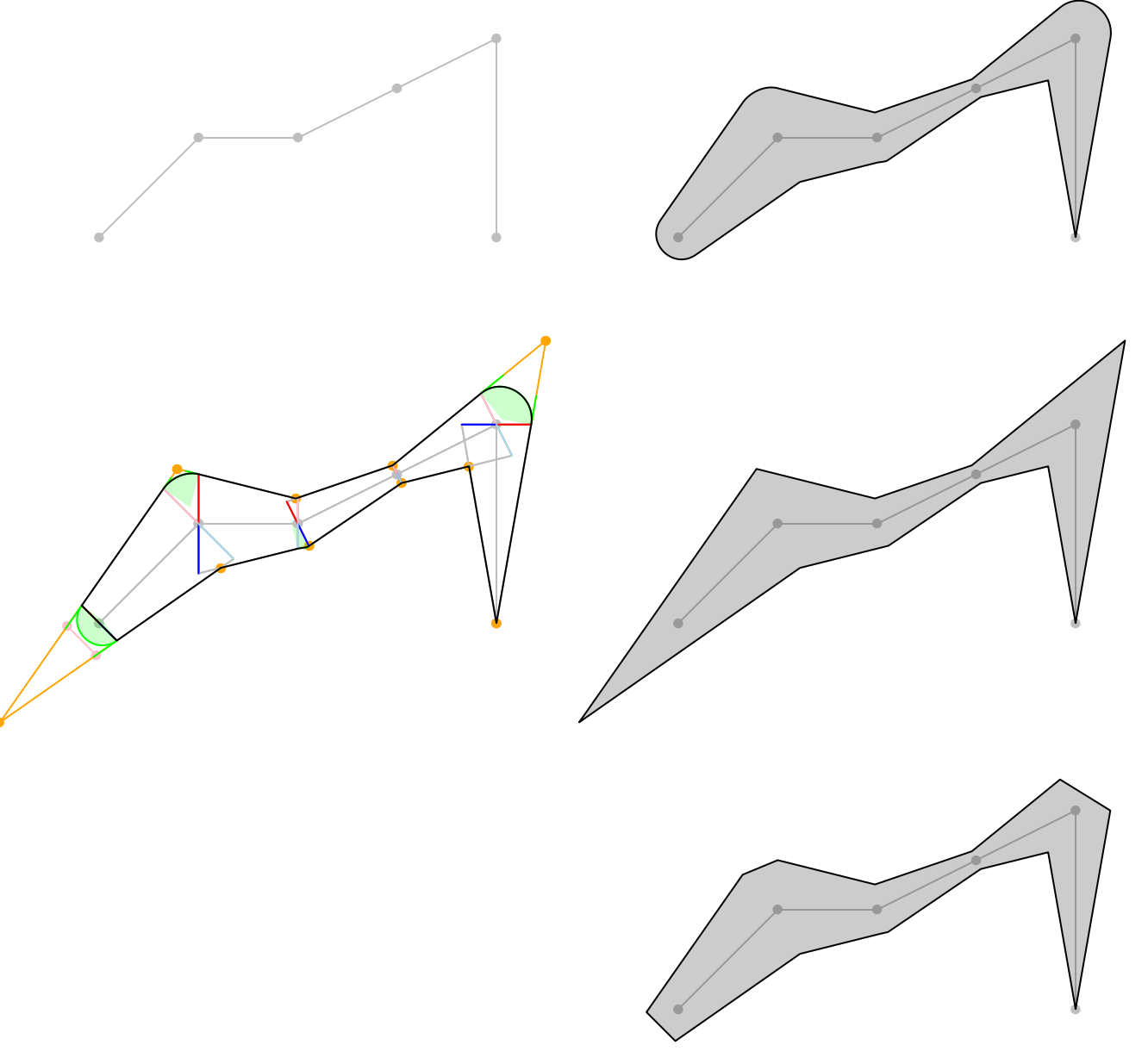

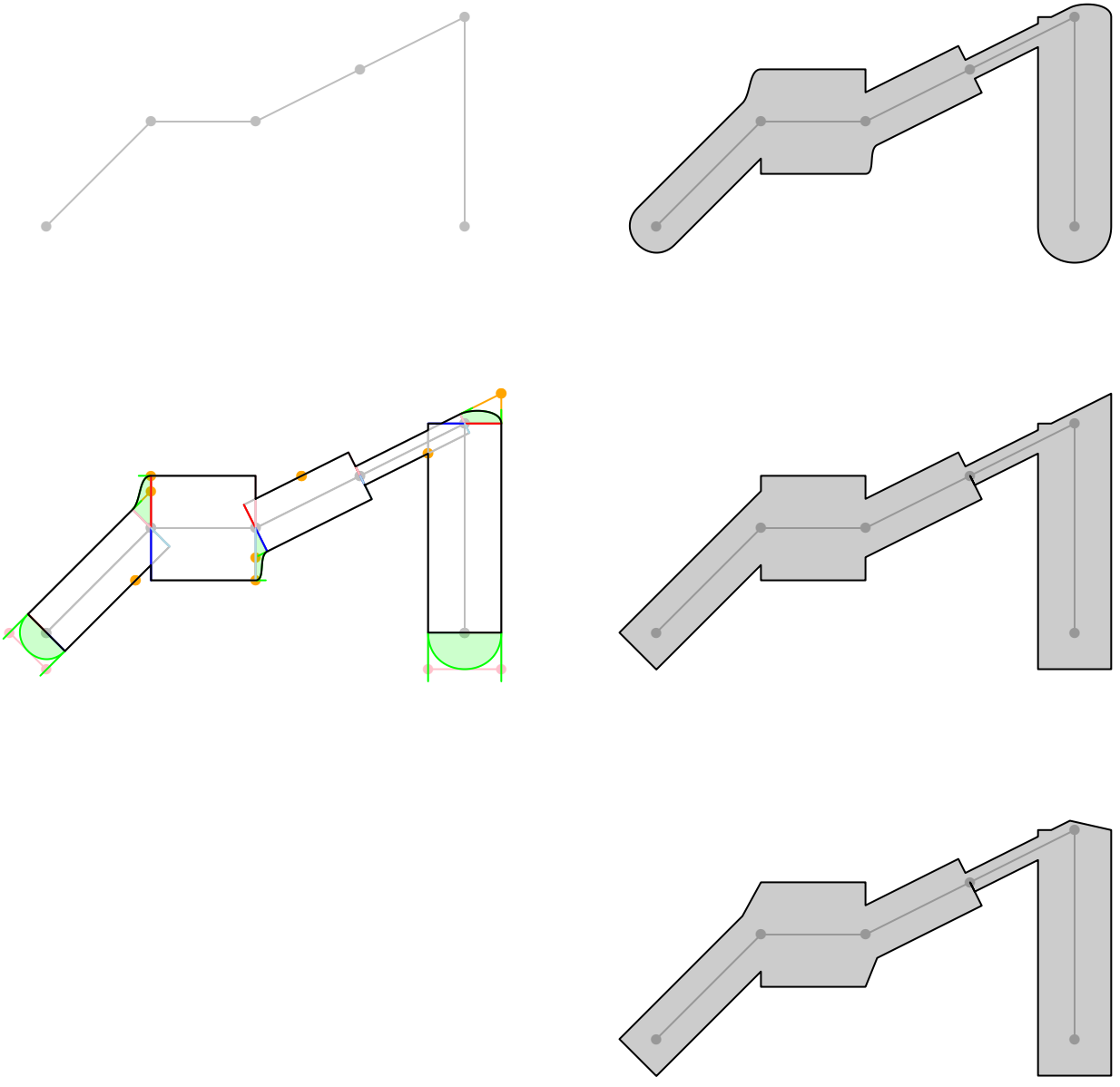

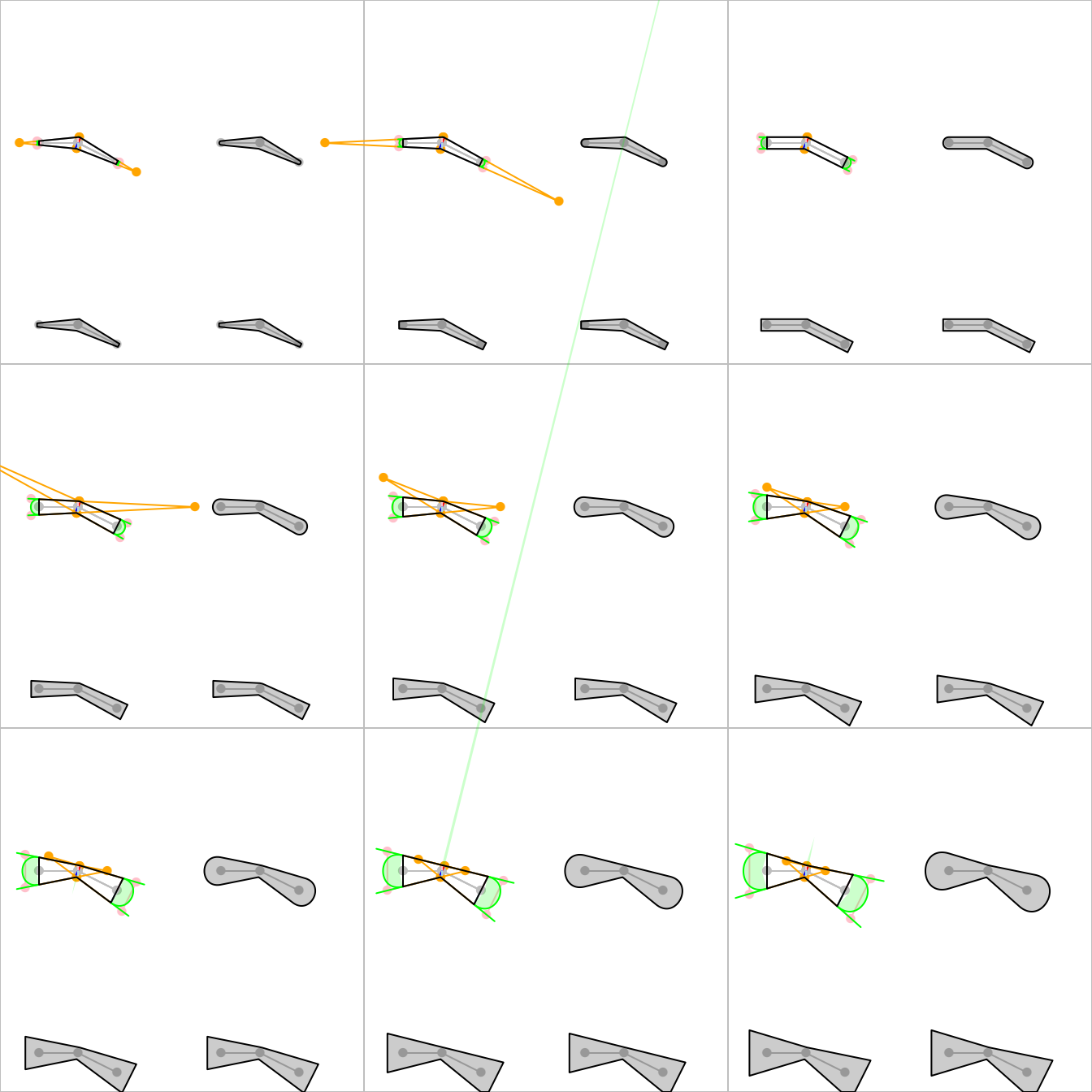

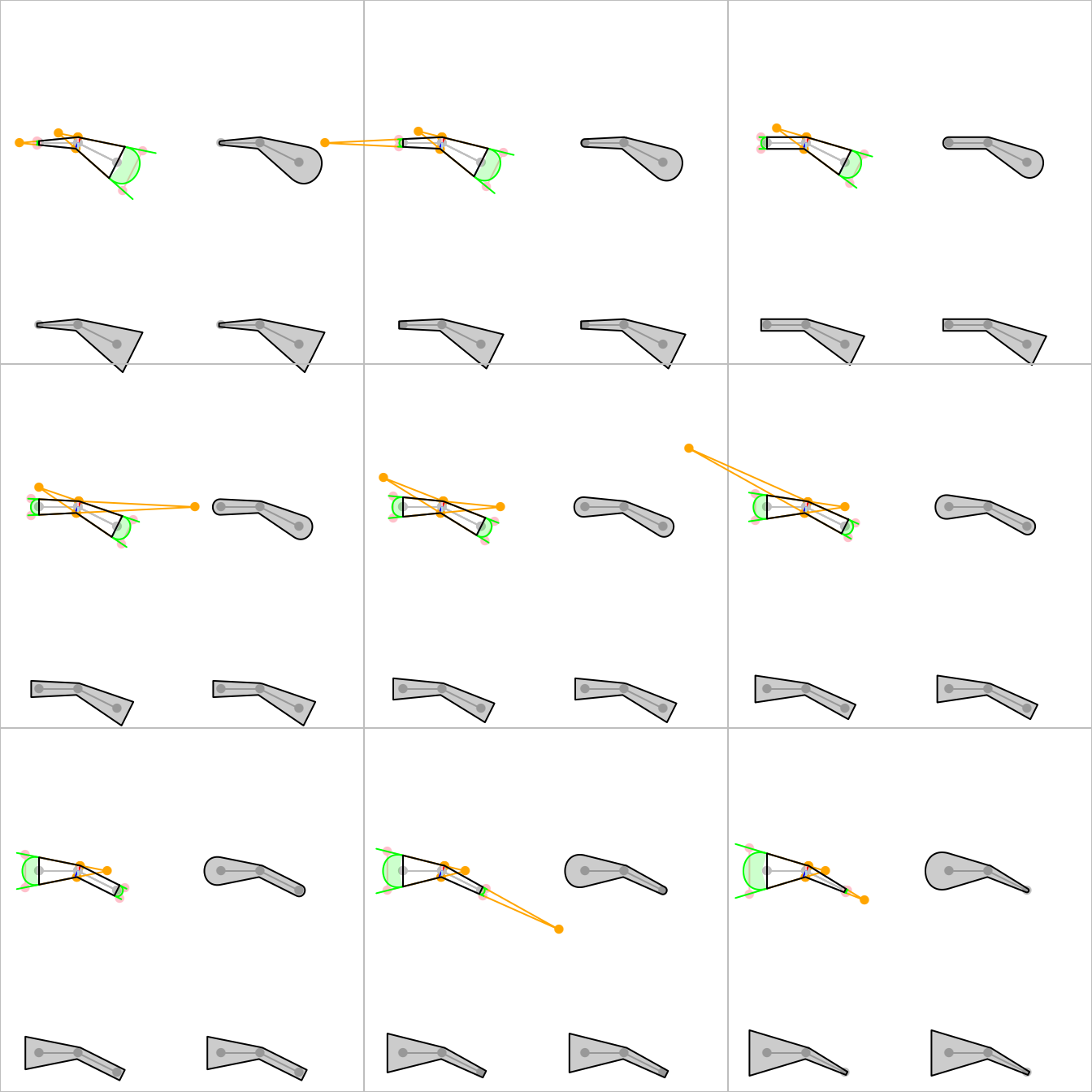

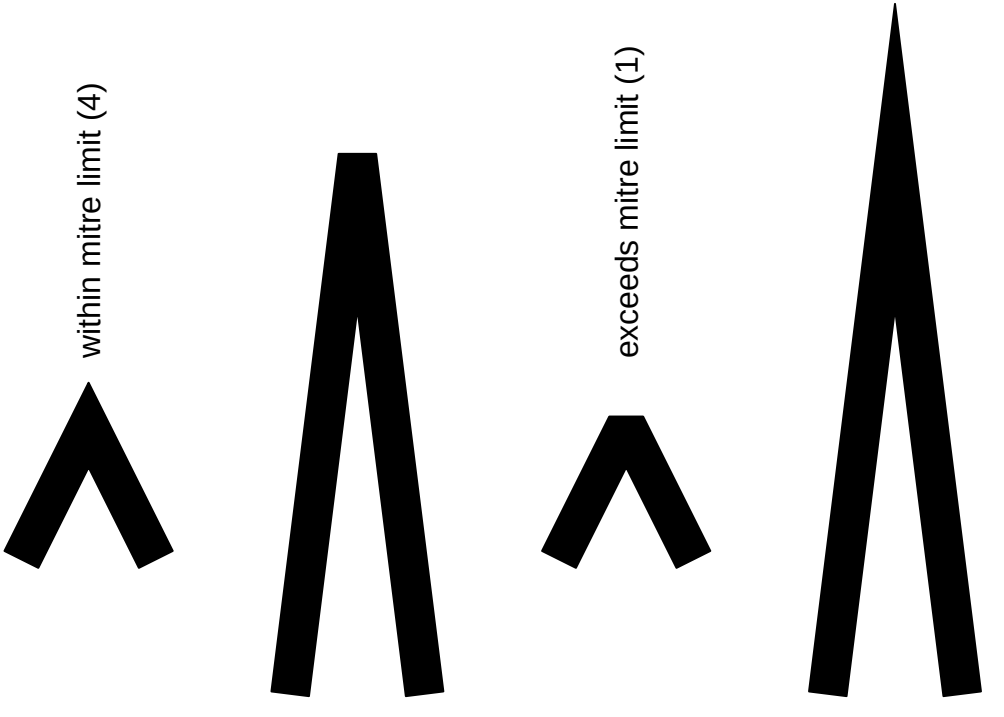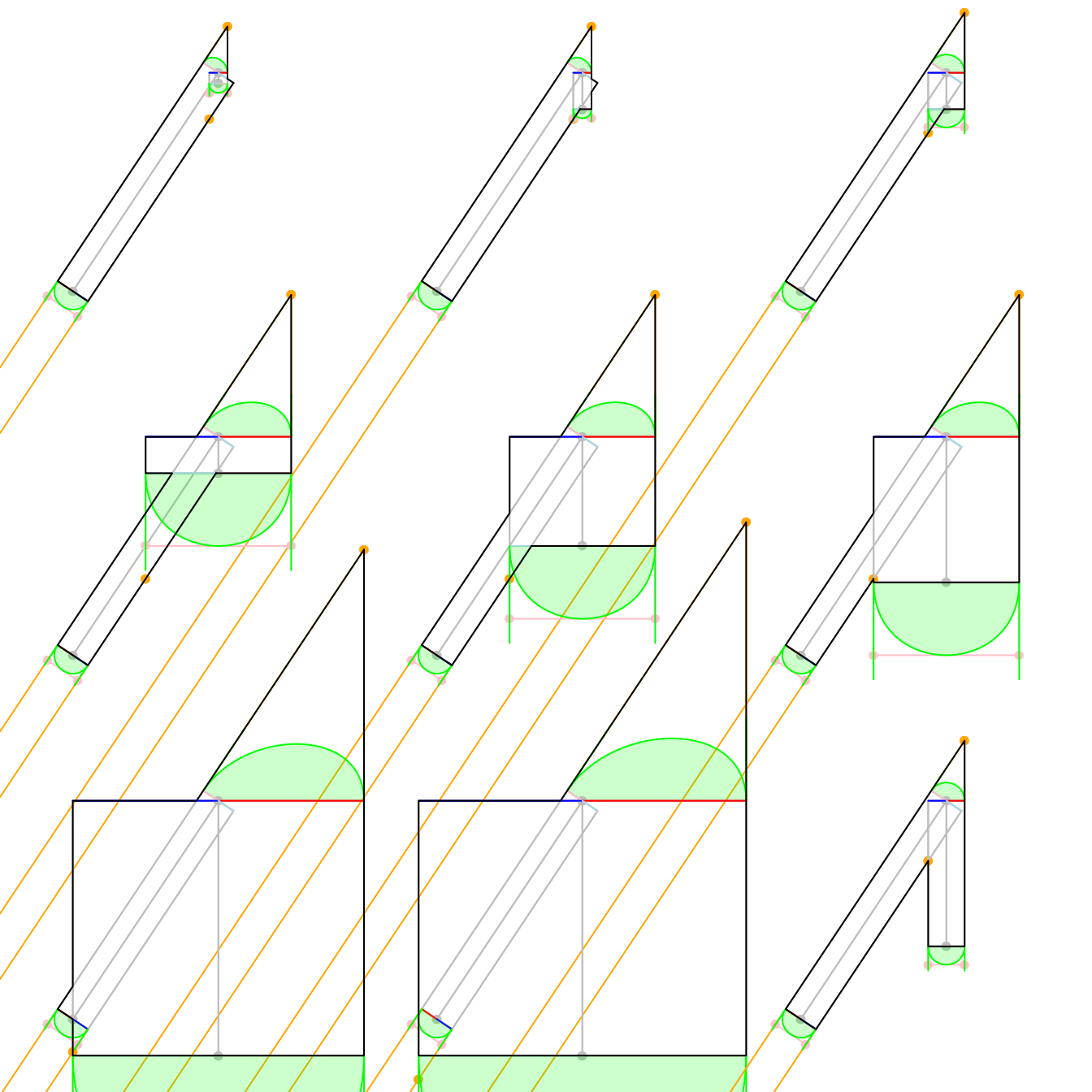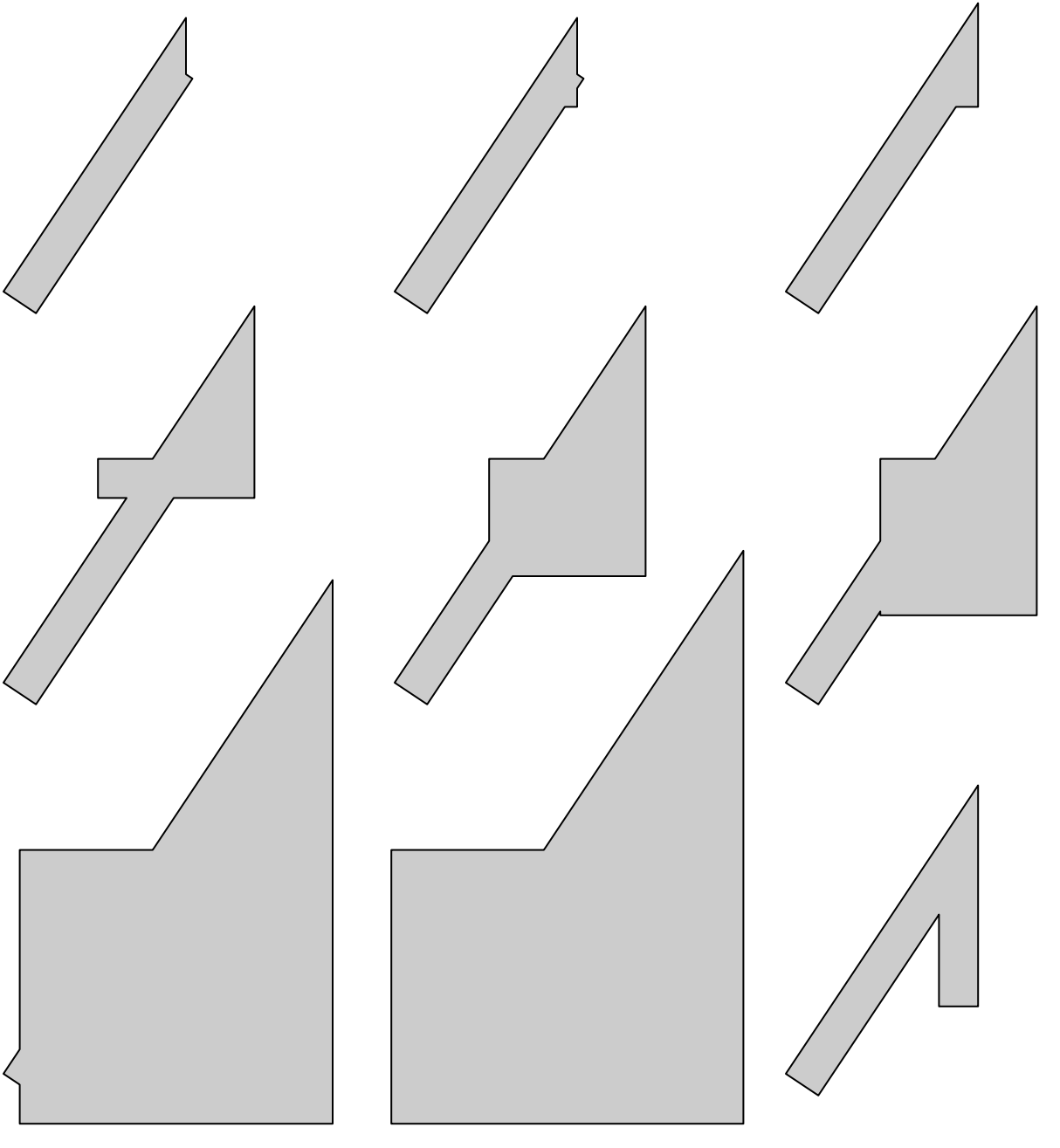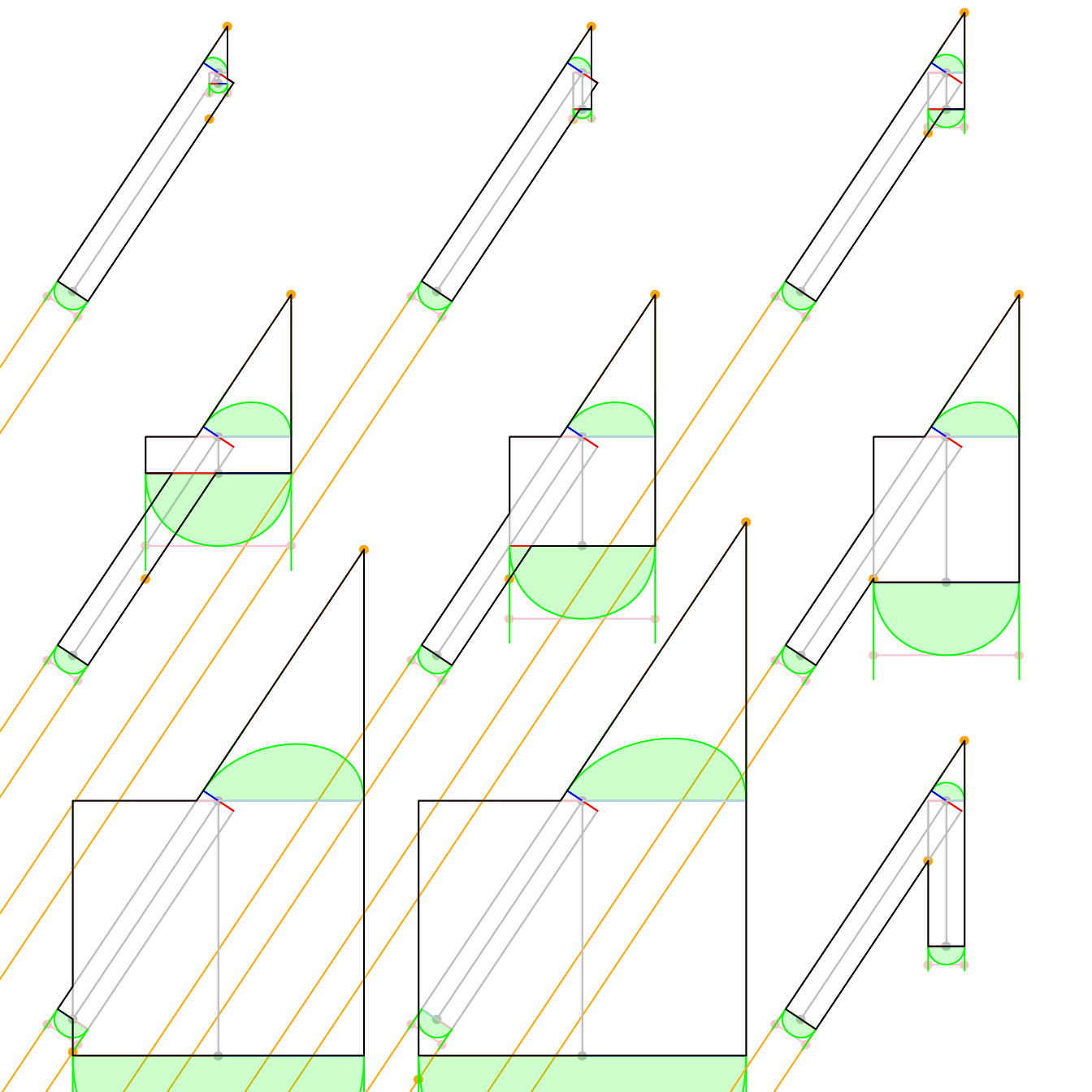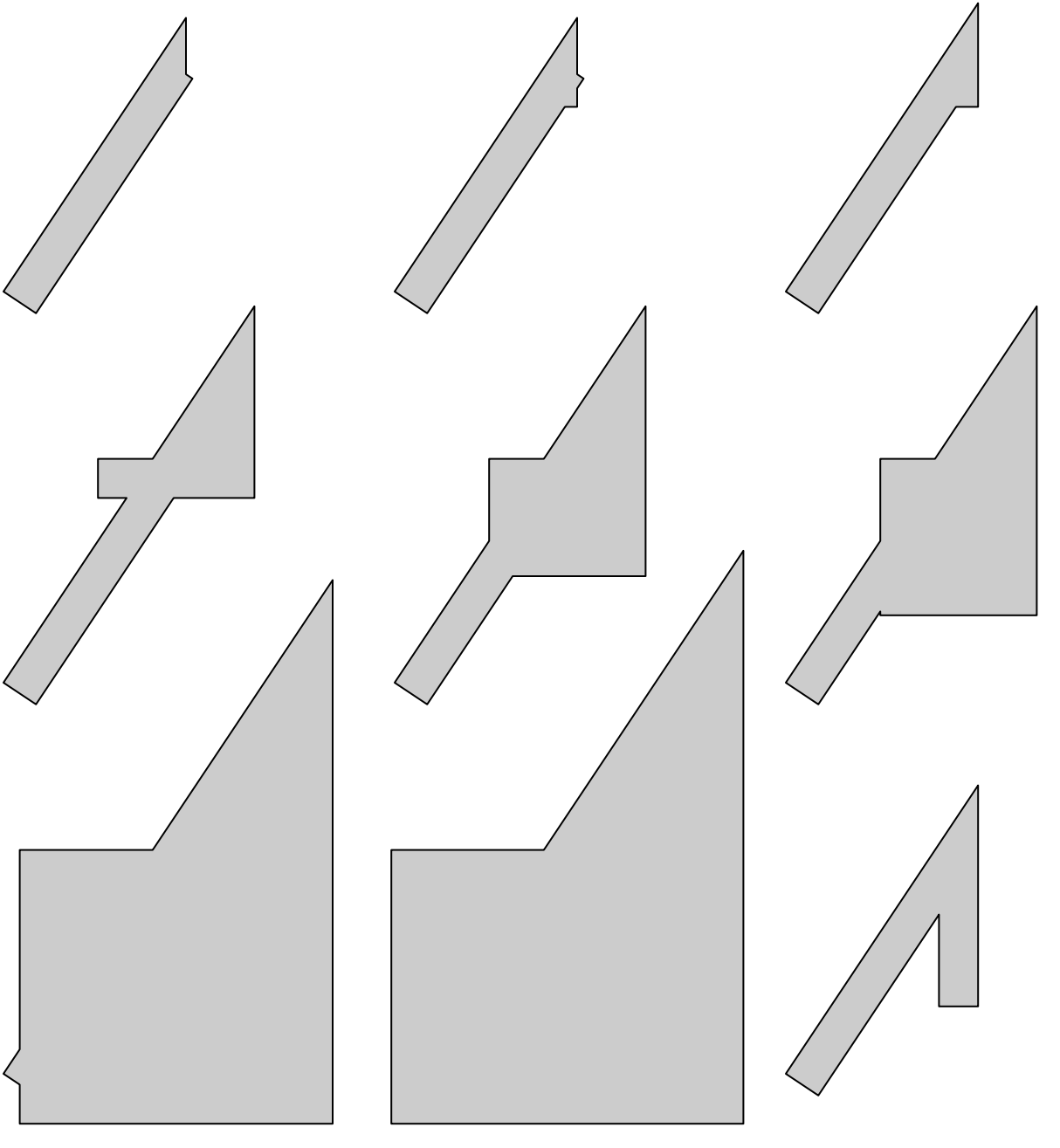
within mitre limit (4)
exceeds mitre limit (1)
exceeds mitre limit (4)
within mitre limit (10)