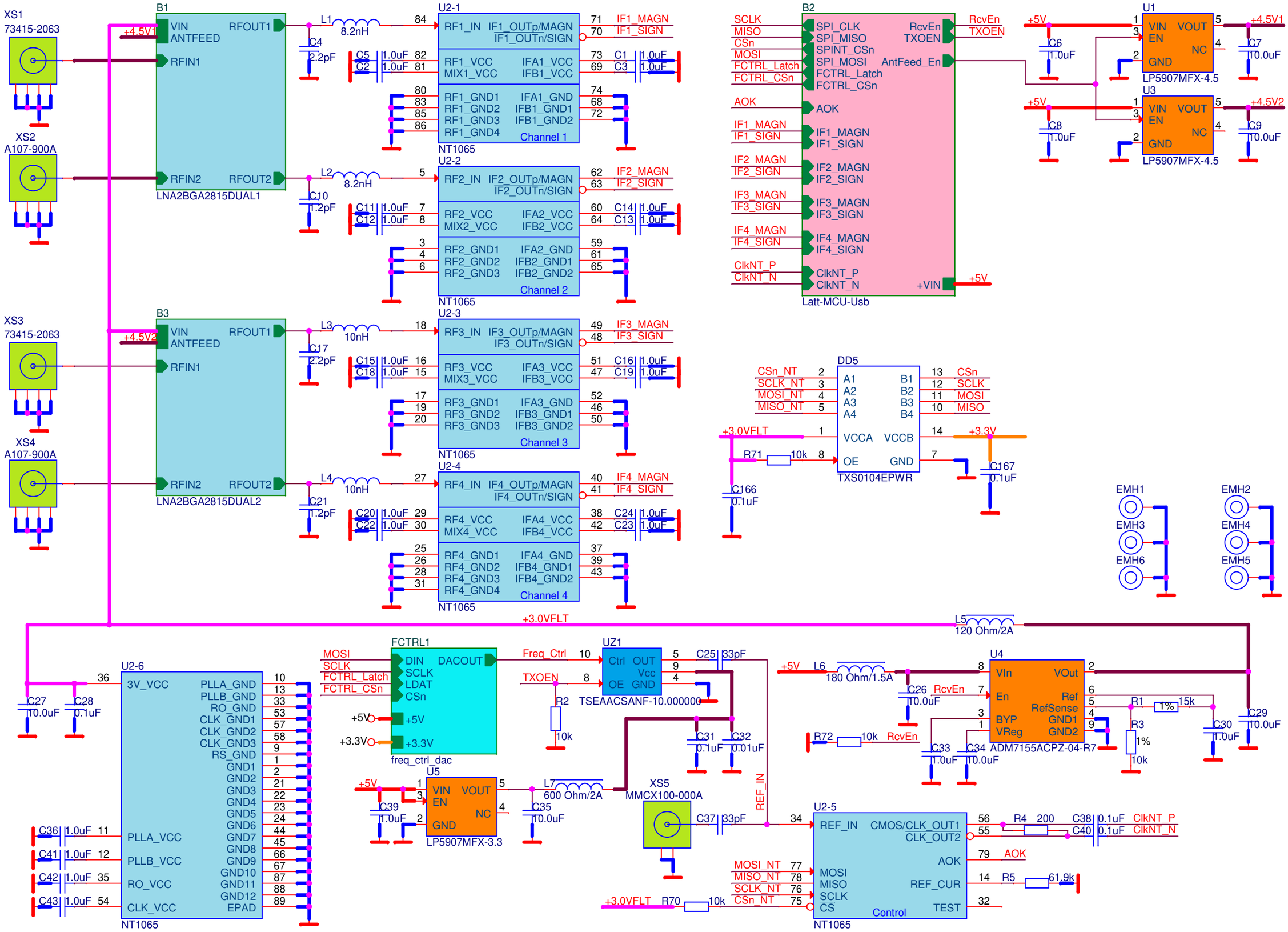
XS1
73415-2063
XS2
A107-900A
XS3
73415-2063
XS4
A107-900A
B1
VIN
ANTFEED
RFOUT1
RFIN1
RFIN2
RFOUT2
LNA2BGA2815DUAL1
B3
LNA2BGA2815DUAL2
+4.5V1
+4.5V2
L1
8.2nH
L2
8.2nH
L3
10nH
L4
10nH
C4
2.2pF
C10
1.2pF
C17
2.2pF
C21
1.2pF
U2-1
U2-2
U2-3
U2-4
RF1_IN
IF1_OUTp/MAGN
IF1_OUTn/SIGN
RF1_VCC
MIX1_VCC
IFA1_VCC
IFB1_VCC
RF1_GND1
RF1_GND2
RF1_GND3
RF1_GND4
IFA1_GND
IFB1_GND1
IFB1_GND2
Channel 1
NT1065
RF2_IN
IF2_OUTp/MAGN
IF2_OUTn/SIGN
RF2_VCC
MIX2_VCC
IFA2_VCC
IFB2_VCC
RF2_GND1
RF2_GND2
RF2_GND3
IFA2_GND
IFB2_GND1
IFB2_GND2
Channel 2
RF3_IN
IF3_OUTp/MAGN
IF3_OUTn/SIGN
RF3_VCC
MIX3_VCC
IFA3_VCC
IFB3_VCC
RF3_GND1
RF3_GND2
RF3_GND3
IFA3_GND
IFB3_GND1
IFB3_GND2
Channel 3
RF4_IN
IF4_OUTp/MAGN
IF4_OUTn/SIGN
RF4_VCC
MIX4_VCC
IFA4_VCC
IFB4_VCC
RF4_GND1
RF4_GND2
RF4_GND3
RF4_GND4
IFA4_GND
IFB4_GND1
IFB4_GND2
Channel 4
IF1_MAGN
IF1_SIGN
IF2_MAGN
IF2_SIGN
IF3_MAGN
IF3_SIGN
IF4_MAGN
IF4_SIGN
C1 1.0uF
C2 1.0uF
C3 1.0uF
C5 1.0uF
C11 1.0uF
C12 1.0uF
C13 1.0uF
C14 1.0uF
C15 1.0uF
C16 1.0uF
C18 1.0uF
C19 1.0uF
C20 1.0uF
C22 1.0uF
C23 1.0uF
C24 1.0uF
B2
SCLK
MISO
CSn
MOSI
FCTRL_Latch
FCTRL_CSn
AOK
IF1_MAGN
IF1_SIGN
IF2_MAGN
IF2_SIGN
IF3_MAGN
IF3_SIGN
IF4_MAGN
IF4_SIGN
ClkNT_P
ClkNT_N
SPI_CLK
SPI_MISO
SPINT_CSn
SPI_MOSI
FCTRL_Latch
FCTRL_CSn
RcvEn
TXOEN
AntFeed_En
+VIN
+5V
Latt-MCU-Usb
U1
U3
VIN
EN
GND
VOUT
NC
LP5907MFX-4.5
C6 1.0uF
C7 10.0uF
C8 1.0uF
C9 10.0uF
+4.5V1
+4.5V2
DD5
CSn_NT
SCLK_NT
MOSI_NT
MISO_NT
A1
A2
A3
A4
B1
B2
B3
B4
VCCA
VCCB
OE
GND
TXS0104EPWR
+3.0VFLT
+3.3V
R71 10k
C166 0.1uF
C167 0.1uF
EMH1
EMH2
EMH3
EMH4
EMH6
EMH5
L5
120 Ohm/2A
U2-6
3V_VCC
PLLA_GND
PLLB_GND
RO_GND
CLK_GND1
CLK_GND2
CLK_GND3
RS_GND
GND1
GND2
GND3
GND4
GND5
GND6
GND7
GND8
GND9
GND10
GND11
GND12
EPAD
PLLA_VCC
PLLB_VCC
RO_VCC
CLK_VCC
C27 10.0uF
C28 0.1uF
C36 1.0uF
C41 1.0uF
C42 1.0uF
C43 1.0uF
NT1065
FCTRL1
DIN
SCLK
LDAT
CSn
DACOUT
+5V
+3.3V
freq_ctrl_dac
Freq_Ctrl
TXOEN
R2 10k
UZ1
Ctrl
OUT
Vcc
OE
GND
TSEAACSANF-10.000000
C25 33pF
C31 0.1uF
C32 0.01uF
U5
VIN
EN
GND
VOUT
NC
LP5907MFX-3.3
C39 1.0uF
C35 10.0uF
L7
600 Ohm/2A
XS5
MMCX100-000A
C37 33pF
REF_IN
L6
180 Ohm/1.5A
C26 10.0uF
R72 10k
U4
VIn
En
BYP
VReg
VOut
Ref
RefSense
GND1
GND2
ADM7155ACPZ-04-R7
C33 1.0uF
C34 10.0uF
R1 15k 1%
R3 10k 1%
C29 10.0uF
C30 1.0uF
U2-5
REF_IN
CMOS/CLK_OUT1
CLK_OUT2
AOK
REF_CUR
TEST
MOSI
MISO
SCLK
CS
Control
R4 200
C38 0.1uF
C40 0.1uF
R5 61.9k
R70 10k
NT1065

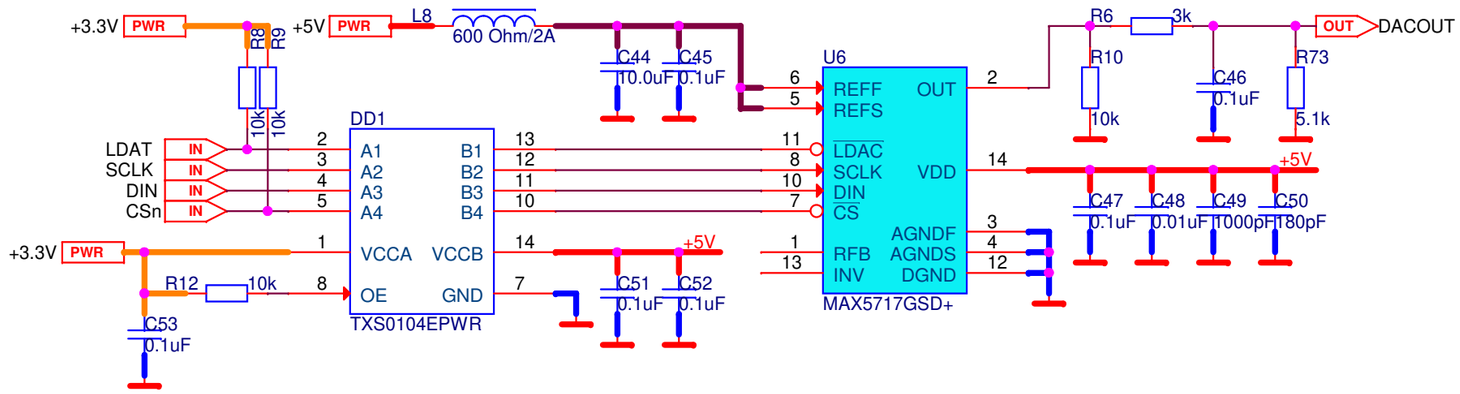
+3.3V
PWR
R8
R9
10k
10k
+5V
PWR
L8
600 Ohm/2A
C44
10.0uF
C45
0.1uF
U6
REFF
REFS
OUT
LDAC
SCLK
DIN
CS
VDD
AGNDF
AGNDS
DGND
RFB
INV
MAX5717GSD+
R6
3k
R10
10k
C46
0.1uF
R73
5.1k
OUT
DACOUT
C47
0.1uF
C48
0.01uF
C49
1000pF
C50
180pF
DD1
A1
A2
A3
A4
B1
B2
B3
B4
VCCA
VCCB
OE
GND
TXS0104EPWR
LDAT
SCLK
DIN
CSn
IN
+3.3V
PWR
R12
10k
C53
0.1uF
C51
0.1uF
C52
0.1uF

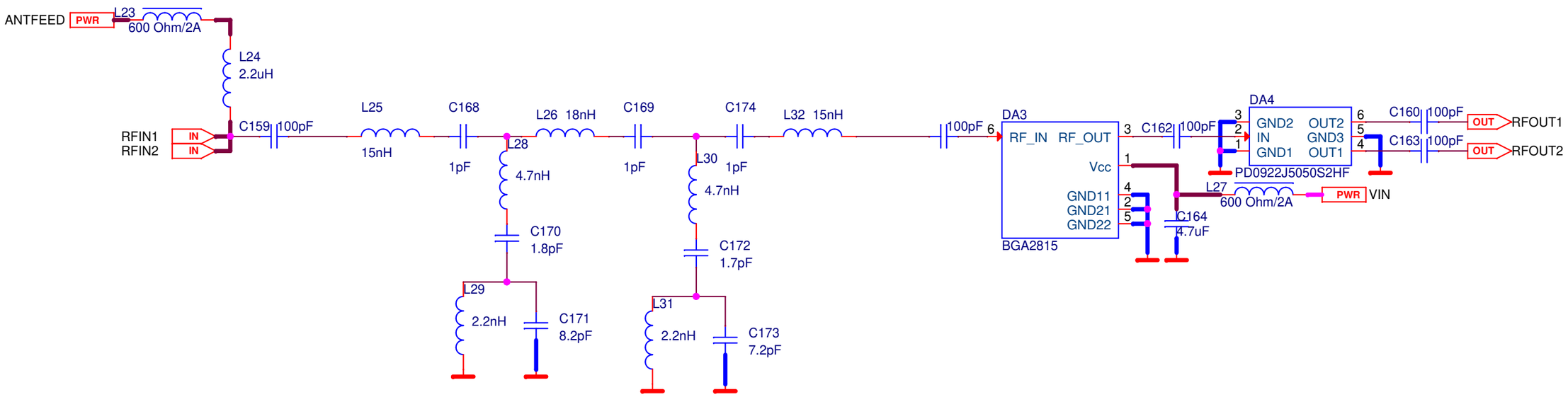
ANTFEED
PWR
L23
600 Ohm/2A
L24
2.2uH
RFIN1
RFIN2
IN
IN
C159
100pF
L25
15nH
C168
1pF
L28
4.7nH
C170
1.8pF
L29
2.2nH
C171
8.2pF
L26 18nH
C169
1pF
L30
4.7nH
C172
1.7pF
L31
2.2nH
C173
7.2pF
C174
1pF
L32 15nH
100pF
DA3
RF_IN
RF_OUT
Vcc
GND11
GND21
GND22
BGA2815
C162
100pF
DA4
GND2
IN
GND1
OUT2
GND3
OUT1
PD0922J5050S2HF
C160
100pF
C163
100pF
OUT
RFOUT1
OUT
RFOUT2
L27
600 Ohm/2A
PWR
VIN
C164
4.7uF

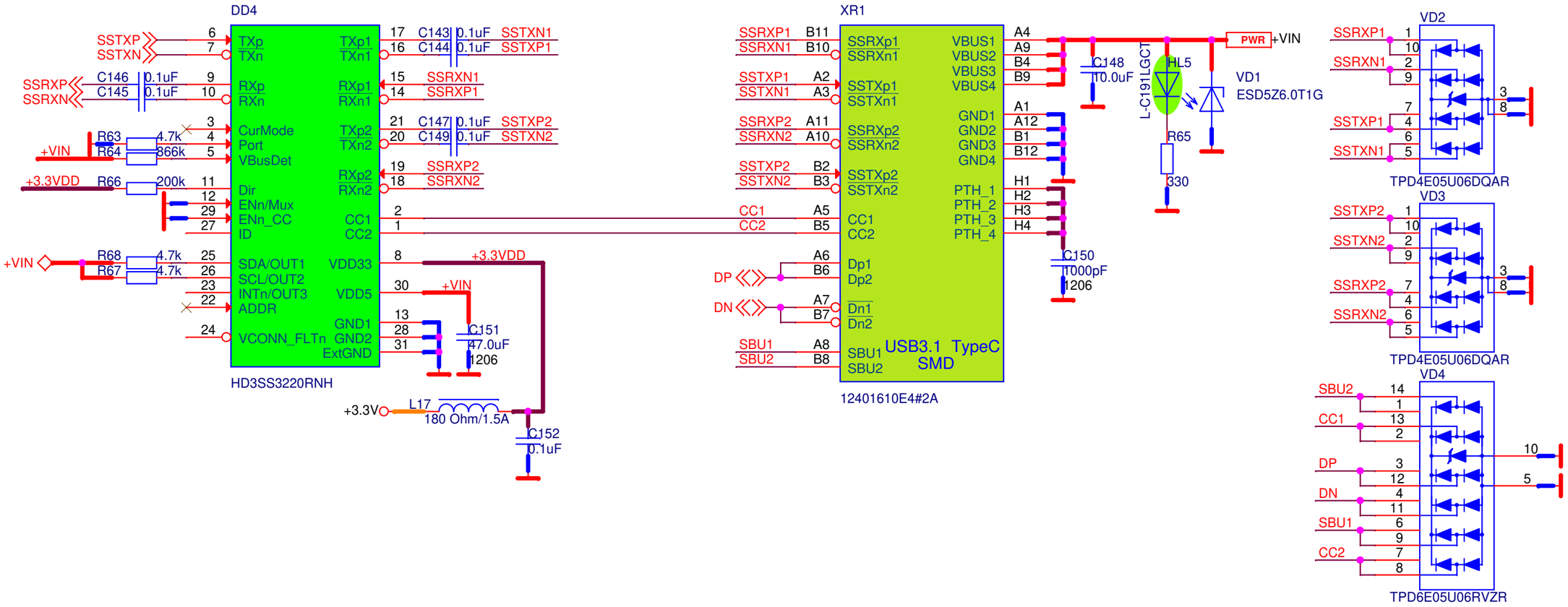
DD4
HD3SS3220RNH
TXp
TXn
RXp
RXn
CurMode
Port
VBusDet
Dir
ENn/Mux
ENn_CC
ID
SDA/OUT1
SCL/OUT2
INTn/OUT3
ADDR
VCONN_FLTn
TXp1
TXn1
RXp1
RXn1
TXp2
TXn2
RXp2
RXn2
CC1
CC2
VDD33
VDD5
GND1
GND2
ExtGND
SSTXP
SSTXN
SSRXP
SSRXN
C146 0.1uF
C145 0.1uF
C143 0.1uF
C144 0.1uF
C147 0.1uF
C149 0.1uF
SSTXN1
SSTXP1
SSRXN1
SSRXP1
SSTXP2
SSTXN2
SSRXP2
SSRXN2
+VIN
R63 4.7k
R64 866k
+3.3VDD
R66 200k
R68 4.7k
R67 4.7k
C151 47.0uF 1206
+3.3V
L17 180 Ohm/1.5A
C152 0.1uF
XR1
12401610E4#2A
USB3.1 TypeC SMD
SSRXp1
SSRXn1
SSTXp1
SSTXn1
SSRXp2
SSRXn2
SSTXp2
SSTXn2
CC1
CC2
Dp1
Dp2
Dn1
Dn2
SBU1
SBU2
VBUS1
VBUS2
VBUS3
VBUS4
GND1
GND2
GND3
GND4
PTH_1
PTH_2
PTH_3
PTH_4
DP
DN
C148 10.0uF
C150 1000pF 1206
L-C191LGCT
HL5
R65 330
PWR
VD1 ESD5Z6.0T1G
VD2
TPD4E05U06DQAR
VD3
TPD4E05U06DQAR
VD4
TPD6E05U06RVZR

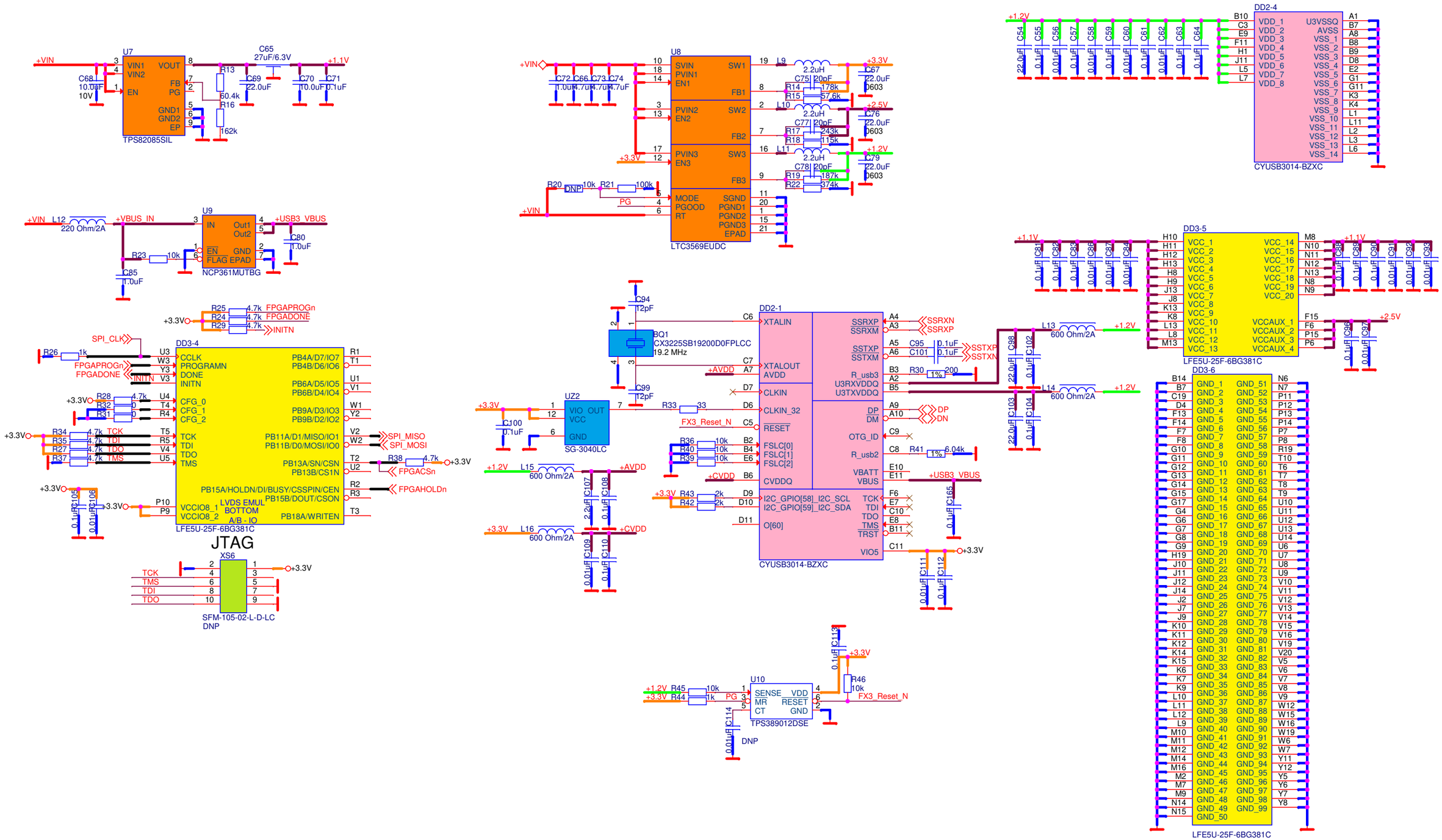
U7
TPS82085SIL
U8
LTC3569EUDC
DD2-4
CYUSB3014-BZXC
U9
NCP361MUTBG
DD3-4
LFE5U-25F-6BG381C
DD3-5
LFE5U-25F-6BG381C
DD3-6
LFE5U-25F-6BG381C
DD2-1
CYUSB3014-BZXC
BQ1
CX3225SB19200D0FPLCC
19.2 MHz
UZ2
SG-3040LC
U10
TPS389012DSE
JTAG
XS6
SFM-105-02-L-D-LC
DNP

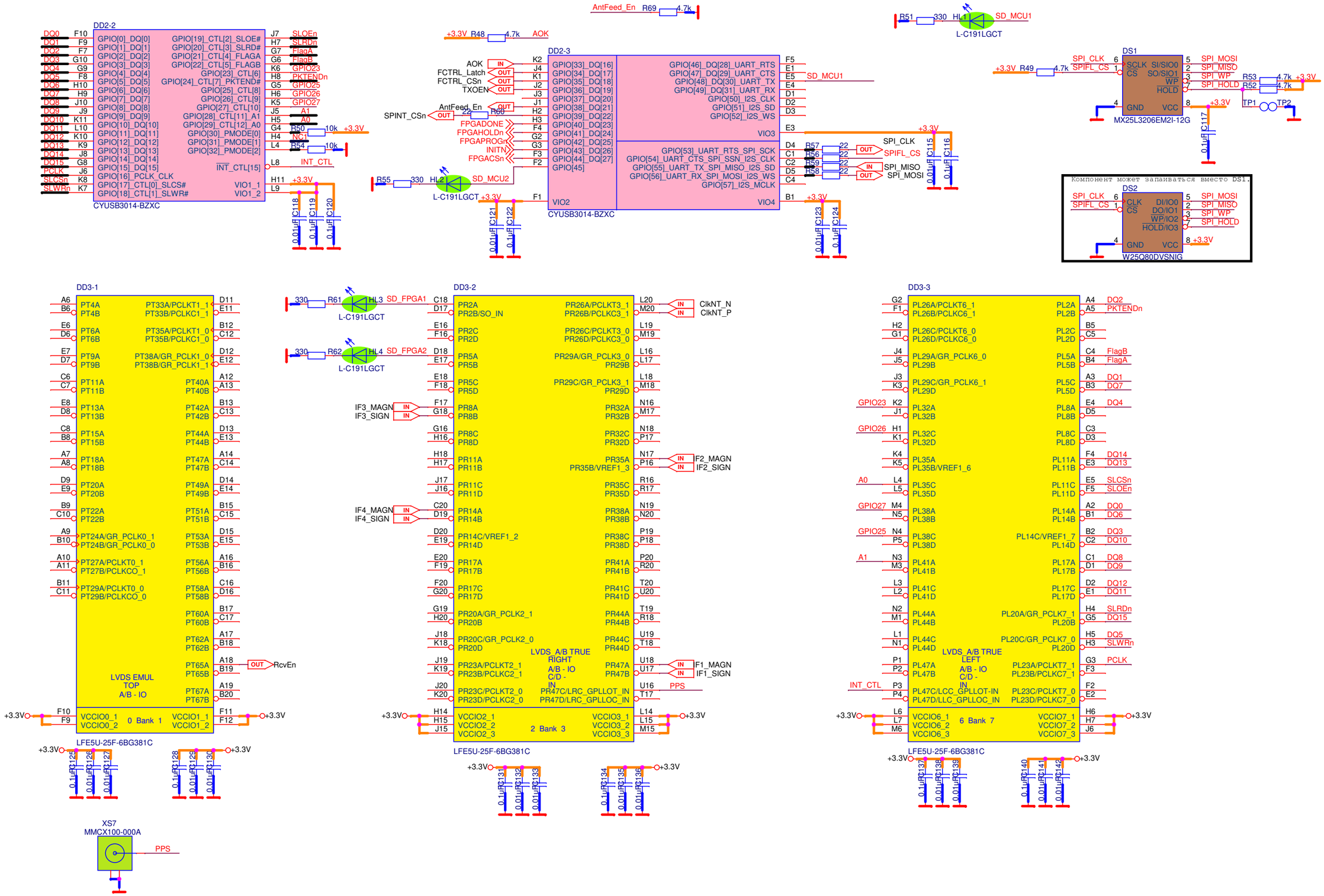
DD2-2
CYUSB3014-BZXC
DD2-3
CYUSB3014-BZXC
AntFeed_En R69 4.7k
+3.3V R48 4.7k AOK
R51 330 HL1 SD_MCU1
L-C191LGCT
R55 330 HL2 SD_MCU2
L-C191LGCT
DS1
MX25L3206EM2I-12G
+3.3V R49 4.7k
SPI_CLK
SPIFL_CS
SPI_MOSI
SPI_MISO
SPI_WP
SPI_HOLD
R53 4.7k
R52 4.7k
TP1
TP2
Компонент может запаиваться вместо DS1.
DS2
W25Q80DVSNIG
DD3-1
LVDS EMUL
TOP
A/B - IO
0 Bank 1
LFE5U-25F-6BG381C
DD3-2
LVDS_A/B TRUE
RIGHT
A/B - IO
C/D - IN
2 Bank 3
LFE5U-25F-6BG381C
DD3-3
LVDS_A/B TRUE
LEFT
A/B - IO
C/D - IN
6 Bank 7
LFE5U-25F-6BG381C
R61 330 HL3 SD_FPGA1
L-C191LGCT
R62 330 HL4 SD_FPGA2
L-C191LGCT
XS7
MMCX100-000A
PPS

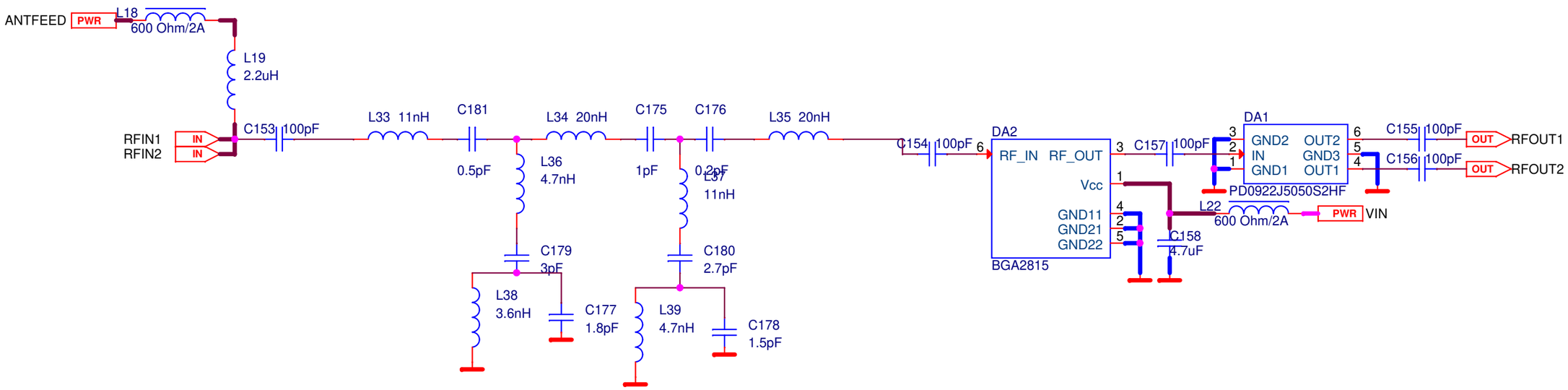
ANTFEED
PWR
L18
600 Ohm/2A
L19
2.2uH
RFIN1
RFIN2
IN
IN
C153
100pF
L33 11nH
C181
0.5pF
L34 20nH
L36
4.7nH
C175
1pF
C176
0.2pF
L37
11nH
L35 20nH
C154
100pF
6
DA2
RF_IN
RF_OUT
Vcc
GND11
GND21
GND22
BGA2815
3
C157
100pF
DA1
GND2
IN
GND1
OUT2
GND3
OUT1
PD0922J5050S2HF
C155
100pF
C156
100pF
OUT
RFOUT1
OUT
RFOUT2
L22
600 Ohm/2A
PWR
VIN
C158
4.7uF
C179
3pF
L38
3.6nH
C177
1.8pF
C180
2.7pF
L39
4.7nH
C178
1.5pF