Previously, we integrated a single-variable function over an interval (i.e. a subset of $\mathbb{R}^1$).

$$\int_a^b f(x)\,dx$$

This week's notes will focus on multiple integration, of a function of two or three variables, over a domain D, which is a subset of $\mathbb{R}^2$ or $\mathbb{R}^3$:

- Integrals over rectangular domains (p3-10, §14.1-14.2)
- Integrals over other 2D domains (p11-22, §14.1-14.2)
- Integrals over discs and sectors (p25-35, §14.4)

$$\iint_D f(x,y)\,dA$$

- Integrals over 3D domains (p36-42, §14.5)
- Integrals over cylinders (p44-46, §10.6,14.6)
- Integrals over balls and cones (p47-53, §10.6,14.6)

$$\iiint_D f(x,y,z)\,dV$$

Note that these are all definite integrals - we will not consider indefinite integrals in higher dimensions. The symbol $\iint$, without a D attached, has no meaning.

Remember from Week 3 slides:

In general, to find the area under the graph of a continuous, positive function $f : [a,b] \to \mathbb{R}$:

1. Divide $[a,b]$ into n subintervals by choosing x_i satisfying $a = x_0 < x_1 < \cdots < x_n = b$. Let $\Delta x_i = x_i - x_{i-1}$.
2. Consider the ith approximating rectangle: its width is Δx_i and its height is $f(x_i)$.
3. So the total area of the approximating rectangles is $\boxed{\sum_{i=1}^{n} \Delta x_i f(x_i).}$ This type of sum is a *Riemann sum*
4. If all Δx_i are equal, then the limit $\lim_{n\to\infty} \sum_{i=1}^{n} \Delta x_i f(x_i)$ will exist and is the area under the graph. (If the Δx_i are not all equal, then we have to choose x_i carefully.)

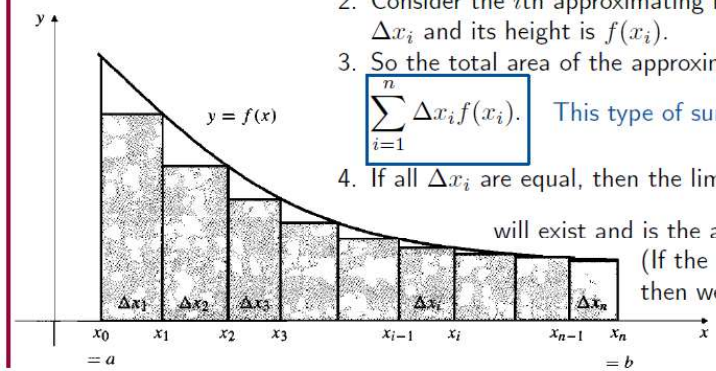

§14.1-14.2: Double Integrals

define later, §12.2

Suppose we wish to find the volume under the graph of a continuous, positive 2-variable function $f(x,y)$, whose domain is a rectangle $a \le x \le b$, $c \le y \le d$ (a 2-dimensional version of an interval).

1. Divide the domain into mn smaller rectangles by choosing x_i and y_j with $a = x_0 < x_1 < \cdots < x_m = b$ and $c = y_0 < y_1 < \cdots < y_n = d$. Let R_{ij} be the small rectangle with $x_{i-1} < x < x_i$ and $y_{j-1} < y < j_j$, and write ΔA_{ij} for its area.

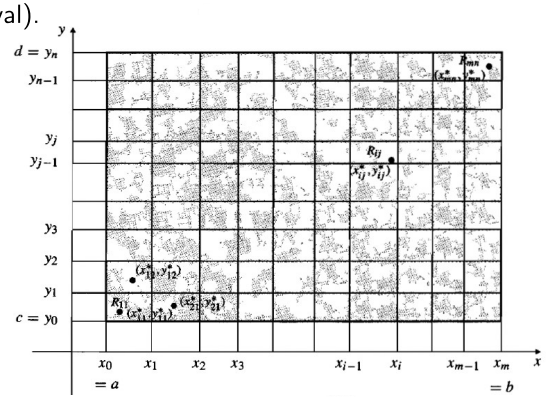

We wish to find the volume under the graph of a continuous, positive 2-variable function $f(x,y)$, whose domain is a rectangle $a \le x \le b$, $c \le y \le d$.

1. Divide the domain into mn smaller rectangles by choosing x_i and y_j with $a = x_0 < x_1 < \cdots < x_m = b$ and $c = y_0 < y_1 < \cdots < y_n = d$. Let R_{ij} be the small rectangle with $x_{i-1} < x < x_i$ and $y_{j-1} < y < y_j$, and write ΔA_{ij} for its area.
2. Choose a point (x_{ij}^*, y_{ij}^*) in each small rectangle R_{ij}. Make a rectangular box above each R_{ij} with height $f(x_{ij}^*, y_{ij}^*)$.
3. The collection of such rectangular boxes, over all the small rectangles R_{ij}, approximate the region under the graph surface. The total volume of these approximating boxes is the Riemann sum $\sum_{i=1}^{m}\sum_{j=1}^{n} f(x_{ij}^*, y_{ij}^*)\Delta A_{ij}$.

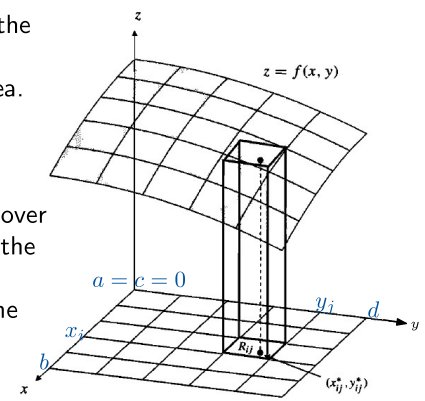

4. Letting $\Delta x_i = x_{i+1} - x_i$ and $\Delta y_j = y_{j+1} - y_j$, the total approximate volume is $\sum_{i=1}^{m}\sum_{j=1}^{n} f(x_{ij}^*, y_{ij}^*)\Delta x_i \Delta y_j$.

   If all Δx_i are equal and all Δy_j are equal, (or if x_i, y_j are chosen in some other careful way), then the limit $\lim_{m,n\to\infty}\sum_{i=1}^{m}\sum_{j=1}^{n} f(x_{ij}^*, y_{ij}^*)\Delta x_i \Delta y_j$ will exist, and is the volume under the graph surface.

To calculate this limit, note that we can calculate the Riemann sum in two stages:

$$\sum_{i=1}^{m}\sum_{j=1}^{n} f(x_{ij}^*, y_{ij}^*)\Delta x_i \Delta y_j = \sum_{i=1}^{m}\underbrace{\left(\sum_{j=1}^{n} f(x_{ij}^*, y_{ij}^*)\Delta y_j\right)}_{\text{1. Fix } x_i \text{ and sum the volumes of the approximating boxes for the different } y_j.}\Delta x_i.$$

2. Sum the approximating volumes from part 1. for the different x_i.

To calculate this 2-dimensional integral, note that we can calculate the Riemann sum in two stages:

$$\sum_{i=1}^{m}\sum_{j=1}^{n} f(x_{ij}^*, y_{ij}^*))\Delta x_i \Delta y_j$$

$$= \sum_{i=1}^{m}\underbrace{\left(\sum_{j=1}^{n} f(x_{ij}^*, y_{ij}^*)\Delta y_j\right)}_{\text{1. Fix } x_i \text{ and sum the volumes of the approximating boxes for the different } y_j.}\Delta x_i.$$

2. Sum the approximating volumes from part 1. for the different x_i.

To continue, take the special case where $x_{ij}^* = x_i^*$ for all j and $y_{ij}^* = y_j^*$ for all i.

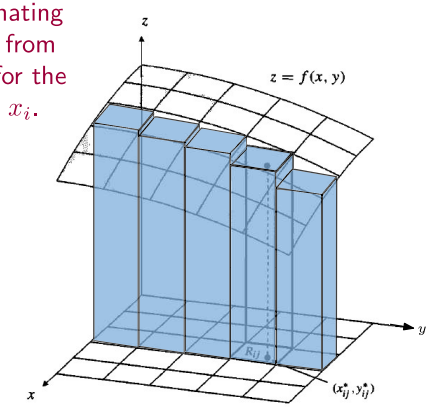

So

$$\lim_{m,n\to\infty}\sum_{i=1}^{m}\sum_{j=1}^{n} f(x_i^*, y_j^*)\Delta x_i \Delta y_j$$

$$= \lim_{m\to\infty}\sum_{i=1}^{m}\underbrace{\left(\lim_{n\to\infty}\sum_{j=1}^{n} f(x_i^*, y_j^*)\Delta y_j\right)}_{\text{cross-sectional area of a vertical slice at } x = x_i^*}\Delta x_i$$

$$= \lim_{m\to\infty}\sum_{i=1}^{m}\left(\int_c^d f(x_i^*, y)\,dy\right)\Delta x_i$$

Treat x_i^* as a constant when computing this integral; the result is a function in x_i^*.

$$= \int_a^b \left(\int_c^d f(x, y)\,dy\right) dx.$$

This is called an iterated integral.

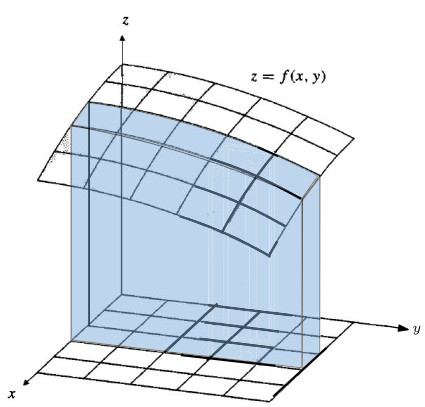

Example: Find the volume lying under the surface $z = 2x^2y + 3y^2$ and above the region $0 \le x \le 3$, $1 \le y \le 2$.

$$\int_a^b \left(\int_c^d f(x, y)\,dy\right) dx$$

Previously (p7) we said

$$\lim_{m,n\to\infty}\sum_{i=1}^{m}\sum_{j=1}^{n} f(x_i^*,y_j^*)\Delta x_i\Delta y_j = \lim_{m\to\infty}\sum_{i=1}^{m}\left(\lim_{n\to\infty}\sum_{j=1}^{n} f(x_i^*,y_j^*)\Delta y_j\right)\Delta x_i$$

$$= \lim_{m\to\infty}\sum_{i=1}^{m}\left(\int_c^d f(x_i^*,y)\,dy\right)\Delta x_i = \int_a^b\left(\int_c^d f(x,y)\,dy\right)dx.$$

But we could instead have chosen to sum first in the x-direction:

$$\lim_{m,n\to\infty}\sum_{i=1}^{m}\sum_{j=1}^{n} f(x_i^*,y_j^*)\Delta x_i\Delta y_j = \lim_{n\to\infty}\sum_{j=1}^{n}\left(\lim_{m\to\infty}\sum_{i=1}^{m} f(x_i^*,y_j^*)\Delta x_i\right)\Delta y_j$$

$$= \lim_{n\to\infty}\sum_{j=1}^{n}\left(\int_a^b f(x,y_j^*)\,dy\right)\Delta y_j = \int_c^d\left(\int_a^b f(x,y)\,dx\right)dy.$$

For a continuous function f, the two iterated integrals give the same answer.

Redo Example: (p8) Find, by first integrating in x, the volume lying under the surface $z = 2x^2y + 3y^2$ and above the region $0 \le x \le 3$, $1 \le y \le 2$.

$$\int_c^d\left(\int_a^b f(x,y)\,dx\right)dy.$$

So we know how to find the volume under the graph of $f(x,y)$ over a rectangle:

$$\int_a^b\int_c^d f(x,y)\,dy\,dx \quad \text{or} \quad \int_c^d\int_a^b f(x,y)\,dx\,dy.$$

It would be useful to find volumes over domains D of other shapes.

Theoretically, the idea is simple: draw a large rectangle R around D, then extend the domain of the function to R by defining $f(x,y) = 0$ on points outside of D. Now f is defined on a rectangle, so we can use the previous Riemann sum formula. (The extended function is not continuous, because there is a jump on the boundary of D, but the Riemann sum will have a limit if D is "well-behaved", see p13).

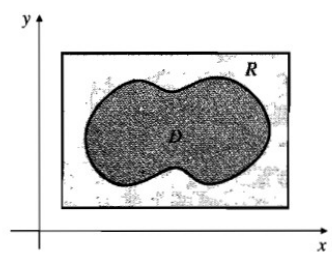

Putting the above all together into a rigorous definition:

Definition: Suppose $f : D \to \mathbb{R}$ is a 2-variable function. Choose a rectangle $R = \{(x,y) \in \mathbb{R}^2 | a \le x \le b, c \le y \le d\}$ such that $D \subseteq R$. Define the function $\hat{f} : R \to \mathbb{R}$ by $\hat{f} = \begin{cases} f(x,y) & \text{if } (x,y) \text{ is in } D \\ 0 & \text{if } (x,y) \text{ is not in } D. \end{cases}$

Let $a = x_0 < x_1 < \cdots < x_m = b$ be a division of $[a,b]$ into m subintervals of equal width, and let $c = y_0 < y_1 < \cdots < y_n = d$ be a division of $[c,d]$ into n subintervals of equal width. Let A_{ij} be the area of the small rectangle with $x_{i-1} < x < x_i$ and $y_{j-1} < y < y_j$, and (x_{ij}^*, y_{ij}^*) be any point in this rectangle.

Then f is *integrable* on D if $\lim_{m,n\to\infty}\sum_{i=1}^{m}\sum_{j=1}^{n}\hat{f}(x_{ij}^*,y_{ij}^*)\Delta A_{ij}$ exists and is independent of the choice of (x_{ij}^*, y_{ij}^*). The value of this limit is the *integral of f on D*:

$$\iint_D f(x)\,dA = \lim_{m,n\to\infty}\sum_{i=1}^{m}\sum_{j=1}^{n}\hat{f}(x_{ij}^*,y_{ij}^*)\Delta A_{ij}.$$

In the single-variable case, we have a theorem that says a continuous function on an interval $[a,b] = \{x \in \mathbb{R} | a \le x \le b\}$ is integrable.

As you might expect, there is a 2-dimensional version of this theorem, which says continuous functions on "reasonable" domains are integrable:

Theorem 1: Continuous functions on closed and bounded sets are integrable: If $f : D \to \mathbb{R}$ is a continuous function and the domain D is a closed and bounded set whose boundary consists of finitely many curves of finite length, then f is integrable on D.

We haven't yet defined "continuous" (§12.2), or "closed", or "bounded" (§13.2), but:

- Any elementary function (i.e. sums, products and compositions of $x^n, e^x, \ln x, \sin x, \cos x$) is continuous;
- A set that is contained in a large rectangle (i.e. not "going to infinity") is bounded;
- A set defined by a finite number of weak inequalities (i.e. $\le$ or $\ge$) of elementary functions is closed, and its boundary is finitely many curves.

(e.g. closed: $\{(x,y) \in \mathbb{R}^2 | x^2 + y^2 \le 1, x \ge 0\}$; not closed: $\{(x,y) \in \mathbb{R}^2 | x^2 + y^2 \ne 1\}$.)

Almost all our examples will satisfy these stronger conditions.

We have defined

$$\iint_D f(x)\,dx = \lim_{m,n\to\infty} \sum_{i=1}^{m}\sum_{j=1}^{n} \hat{f}(x_{ij}^*, y_{ij}^*)\Delta A_{ij}, \quad \hat{f} = \begin{cases} f & \text{on } D \\ 0 & \text{outside } D. \end{cases}$$

What does this mean for our computation using iterated integrals?

Suppose $D = \{(x,y) \in \mathbb{R}^2 | a \le x \le b, c(x) \le y \le d(x)\}$ as in the picture.
We put D in a rectangle by choosing $c < c(x)$ and $d > d(x)$ for all x. Then

$$\iint_D f(x)\,dA = \int_a^b \left(\int_c^d \hat{f}(x,y)\,dy \right) dx$$

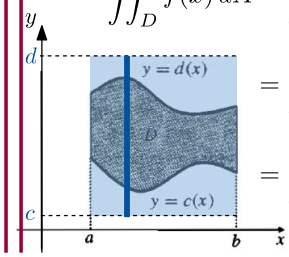

$$= \int_a^b \left(\int_c^{c(x)} \underbrace{\hat{f}(x,y)}_{0}\,dy + \int_{c(x)}^{d(x)} \underbrace{\hat{f}(x,y)}_{f}\,dy + \int_{d(x)}^{d} \underbrace{\hat{f}(x,y)}_{0}\,dy \right) dx$$

$$= \int_a^b \left(\int_{c(x)}^{d(x)} f(x,y)\,dy \right) dx$$

The shape of D is encoded in the limits of the inner (first) integral.

From the previous slide:
If $D = \{(x,y) \in \mathbb{R}^2 | a \le x \le b, c(x) \le y \le d(x)\}$,

then $\iint_D f(x)\,dA = \int_a^b \int_{c(x)}^{d(x)} f(x,y)\,dy\,dx.$

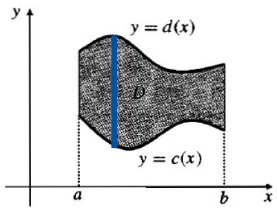

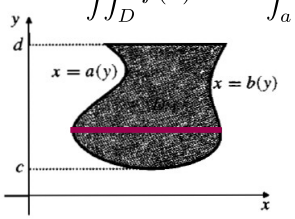

Similarly, if $D = \{(x,y) \in \mathbb{R}^2 | a(y) \le x \le b(y), c \le y \le d\}$,

then $\iint_D f(x)\,dA = \int_c^d \int_{a(y)}^{b(y)} f(x,y)\,dx\,dy.$

Many domains (rectangles, triangles) can be written in both the above ways, so both formulas work. (We already saw this when we calculated areas of plane regions (Week 4 p23-25) - indeed, the area of D is $\iint_D 1\,dA$.)
If a domain cannot be written in either way, then we must split it into regions which are of these forms.

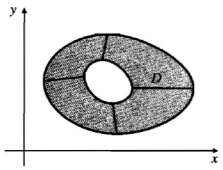

From the previous slide:
If $D = \{(x,y) \in \mathbb{R}^2 | a \le x \le b, c(x) \le y \le d(x)\}$,

then $\iint_D f(x)\,dA = \int_a^b \int_{c(x)}^{d(x)} f(x,y)\,dy\,dx.$

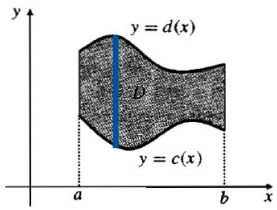

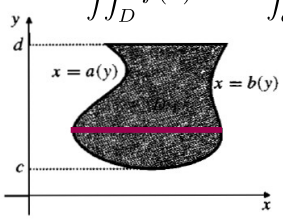

Similarly, if $D = \{(x,y) \in \mathbb{R}^2 | a(y) \le x \le b(y), c \le y \le d\}$,

then $\iint_D f(x)\,dA = \int_c^d \int_{a(y)}^{b(y)} f(x,y)\,dx\,dy.$

Warning: In both cases, only the inner (first) integral may have limits that contain variables, and those must be the variables of the outer (second) integral.

Some wrong examples: $\cancel{\int_{c(x)}^{d(x)} \int_a^b f(x,y)\,dx\,dy}$, $\cancel{\int_a^b \int_{c(y)}^{d(y)} f(x,y)\,dy\,dx}$

Example: Find the volume lying under the surface $z = x^2 + y^2$ and above the triangle with vertices $(0,0)$, $(1,0)$, $(1,2)$.

As we saw above, we get the same answer whether we integrate first in x and then in y, or first in y and then in x. Sometimes one order is much easier than the other - changing the order is called reiterating the integral.

Example: Evaluate $\displaystyle\int_0^1 \int_{\sqrt{x}}^1 e^{-y^3}\, dy\, dx$.

The integral $\displaystyle\int_a^b \int_{c(x)}^{d(x)} f(x,y)\, dy\, dx$ is sometimes written $\displaystyle\int_a^b dx \int_{c(x)}^{d(x)} f(x,y)\, dy$, to emphasise that the limits a, b refer to the variable x. Similarly, $\displaystyle\int_c^d dy \int_{a(y)}^{b(y)} f(x,y)\, dx$ means $\displaystyle\int_c^d \int_{a(y)}^{b(y)} f(x,y)\, dx\, dy$.

Some properties of multiple integrals, analogous to properties for 1D definite integrals (same labelling as in Week 3 p19-20):

c. An integral depends linearly on the integrand: if L and M are constants, then
$$\iint_D Lf(x,y) + Mg(x,y)\, dA = L \iint_D f(x,y)\, dA + M \iint_D g(x,y)\, dA.$$

d. An integral depends additively on the domain of integration: if D_1 and D_2 are non-overlapping domains (except possibly on their boundaries), then
$$\int_{D_1} f(x,y)\, dA + \int_{D_2} f(x,y)\, dA = \int_{D_1 \cup D_2} f(x,y)\, dx.$$

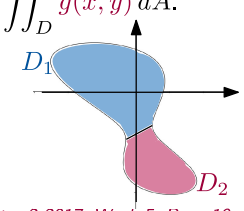

Some properties of multiple integrals, analogous to properties for 1D definite integrals (same labelling as in Week 3 p19-20):

g. If $f(x,y)$ is an odd function in x (i.e. $f(x,y) = -f(-x,y)$) and D is symmetric about the y-axis (i.e. replacing x by $-x$ in the definition of D doesn't change D), then $\displaystyle\int_D f(x,y)\, dA = 0$ (and similarly for an odd function in y and a domain symmetric about the x-axis).

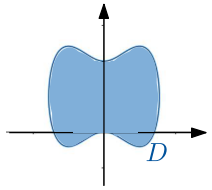

Example: Find $\displaystyle\iint_D y + \sin x \cos y\, dA$, where $D = \{(x,y) \in \mathbb{R}^2 | 4x^2 + y^2 \le 4\}$.

There is a more interesting symmetry property of 2D integrals that we don't see in 1D definite integrals. This comes from the fact that the variable of integration is a dummy variable, so $\int_a^b f(x)\,dx = \int_a^b f(t)\,dt$, or, in 2D,

$$\int_c^d \int_{a(y)}^{b(y)} f(x,y)\,dx\,dy = \int_c^d \int_{a(t)}^{b(t)} f(s,t)\,ds\,dt.$$

In particular,

$$\int_c^d \int_{a(y)}^{b(y)} f(x,y)\,dx\,dy = \int_c^d \int_{a(x)}^{b(x)} f(y,x)\,dy\,dx,$$

and if the domains on the two sides $\{(x,y) \in \mathbb{R}^2 | a(y) \le x \le b(y), c \le y \le d\}$ and $\{(x,y) \in \mathbb{R}^2 | a(x) \le y \le b(x), c \le x \le d\}$ are equal, (i.e. D is symmetric in x and y) then this is often helpful.

$$\int_c^d \int_{a(y)}^{b(y)} f(x,y)\,dx\,dy = \int_c^d \int_{a(x)}^{b(x)} f(y,x)\,dy\,dx.$$

Example: (ex sheet #8 q2) Let D be the region bounded by the lines $x = 0$, $y = 0$ and $x + y = 2$. There are two ways to see that D is symmetric in x and y: the set of three lines do not change when we exchange x and y in the equations; from the diagram, D is unaffected by reflection in the line $y = x$.

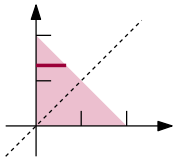

Consider $\iint_D x^2\,dA$. One way to write it as an interated integral is $\int_0^2 \int_0^{2-y} x^2\,dx\,dy$. Renaming the variables of integration, this is the same as $\int_0^2 \int_0^{2-x} y^2\,dy\,dx$, and the domain of this double integral is also D. Hence $\iint_D x^2\,dA = \iint_D y^2\,dA$, i.e. $\iint_D x^2 - y^2\,dA = 0$.

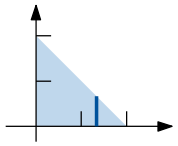

The following example leads to a very complicated integral that we will redo (p31) in a much easier way.

Example: Find the volume of the region bounded by $z = 1 - x^2 - y^2$ and $z = 0$.

The integral in the previous example was very complicated because the domain was circular, but we were using a method based on Riemman sums over rectangular subdomains.

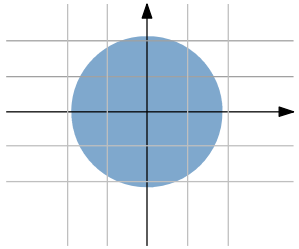

In the rest of this week's notes, we derive a second method for evaluating double integrals that use Riemman sums over the subdomains in the grid at the bottom.

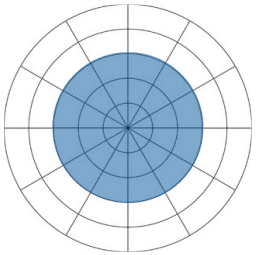

(This second method is one special case of the method of substitution for multiple integrals - we will discuss this in general in the final week of class.)