CUI Devices is now Same Sky! Learn More

SERIES: TS02 | DESCRIPTION: TACTILE SWITCH

FEATURES

- through hole
- long crimped pins
- short crimped pins

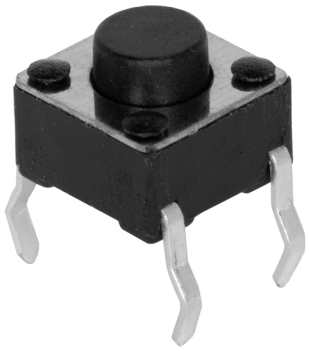

SPECIFICATIONS

parameter	conditions/description	min	typ	max	units
rated voltage		1		12	Vdc
rated current		0.01		50	mA
withstanding voltage	for 1 minute		250		Vac
contact resistance	applying load of 2 times operating force at 5 Vdc, 10 mA			100	mΩ
insulation resistance	at 100 Vdc for 1 minute	100			MΩ
operating force	see force table				
actuator travel		0.15	0.25	0.35	mm
operating temperature		-30		80	°C
storage temperature		-40		90	°C
life	rated load, 2 cycles/second, 1.5 times operating force 100 gf models 160 gf models 260 gf models		 100,000 80,000 60,000		 cycles cycles cycles
vibration	10~55~10 Hz, 1.5 mm amplitude, 2 hours on each XYZ				
flammability rating	see material table				
RoHS	yes				

SOLDERABILITY

parameter	conditions/description	min	typ	max	units
hand soldering	for maximum 3 seconds			350	°C
wave soldering	for maximum 5 seconds			260	°C

PART NUMBER KEY

TS02 - 66 - XX - BK - XXX - XXX - D

Base Number

Actuator Height above PCB:
43 = 4.3 mm 80 = 8.0 mm 130 = 13.0 mm
50 = 5.0 mm 90 = 9.0 mm *140 = 14.0 mm
*55 = 5.5 mm 95 = 9.5 mm 150 = 15.0 mm
60 = 6.0 mm 100 = 10.0 mm 153 = 15.3 mm
70 = 7.0 mm 110 = 11.0 mm *160 = 16.0 mm
73 = 7.3 mm *120 = 12.0 mm 170 = 17.0 mm

Push Force:
100 = 100 gf
160 = 160 gf
260 = 260 gf

Terminals:
SCR = Short Crimped
LCR = Long Crimped

Note: *Only available with LCR (long crimped) terminals.

MECHANICAL DRAWING (SCR VERSION)

units: mm
tolerance: ±0.2 mm
unless otherwise noted

ITEM	DESCRIPTION	MATERIAL	PLATING/COLOR
1	terminals	brass	silver
2	housing	PA66 (UL94HB)	black
3	contacts	phosphor bronze	silver
4	cover	stainless steel	
5	stem	PA66 (UL94HB)	black

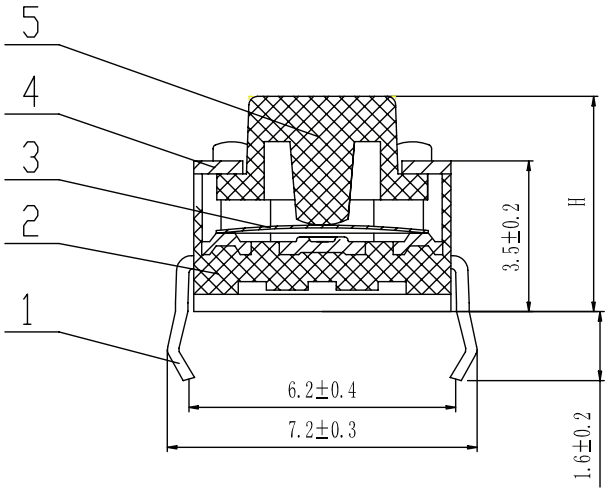

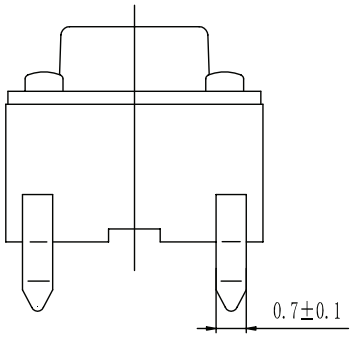

ACTUATOR POSITION [ ]: MOMENTARY	
NORMAL	DOWN
OFF	[ON]
SCHEMATIC	

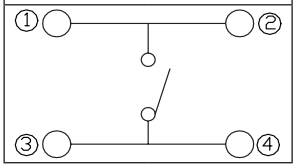

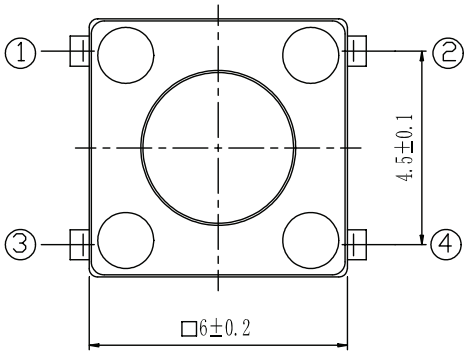

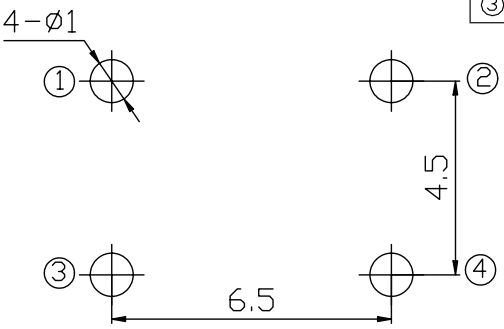

Recommended PCB Layout
Top View

Operting Force Table		
Model	Press Force (N)	Return Force (N)
100	1.0±0.3	>0.2
160	1.6±0.5	>0.2
260	2.6±0.5	>0.2

MECHANICAL DRAWING (LCR VERSION)

units: mm
tolerance: ±0.2 mm
unless otherwise noted

ITEM	DESCRIPTION	MATERIAL	PLATING/COLOR
1	terminals	brass	silver
2	housing	PA66 (UL94HB)	black
3	contacts	stainless steel	silver
4	cover	stainless steel	
5	stem	PA66 (UL94HB)	black

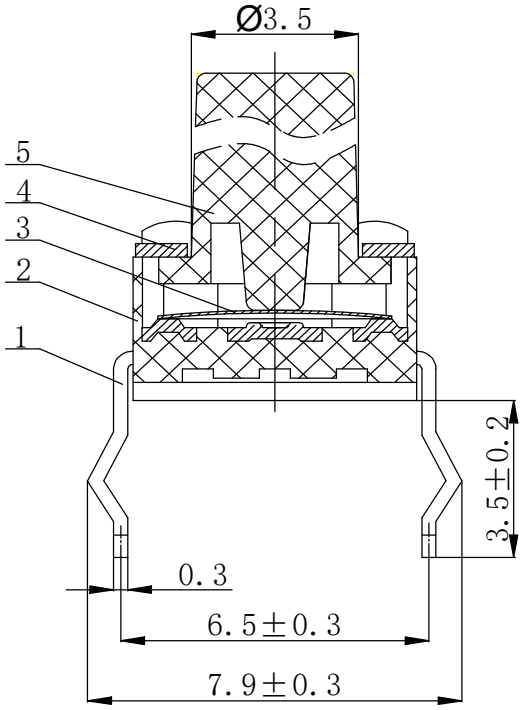

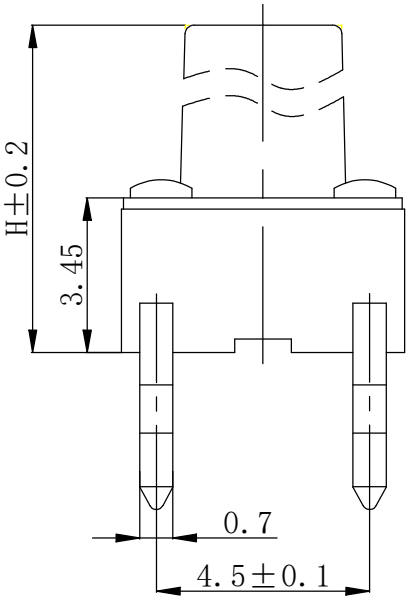

ACTUATOR POSITION [ ]: MOMENTARY	
NORMAL	DOWN
OFF	(ON)
SCHEMATIC	

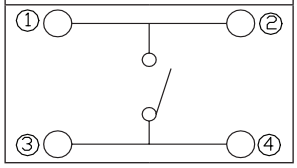

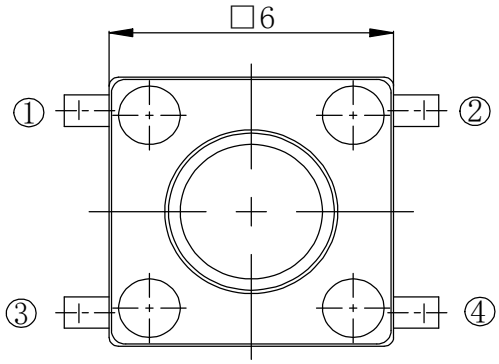

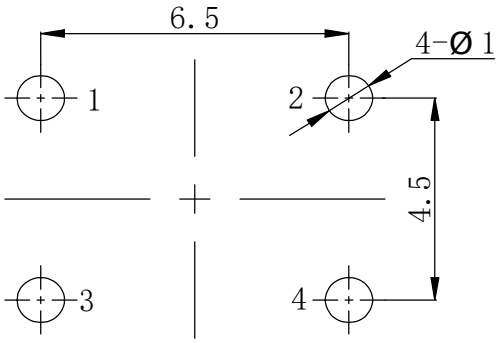

Recommended PCB Layout
Top View

Operting Force Table		
Model	Press Force (N)	Return Force (N)
100	1.0±0.3	>0.2
160	1.6±0.5	>0.2
260	2.6±0.5	>0.2

PACKAGING

units: mm

Bag Size: 190 x 160 mm
Carton Box Size: 445 x 350 x 280 mm
Bag QTY: 1,000 pcs per box
Carton Box QTY: 60,000 pcs per bag

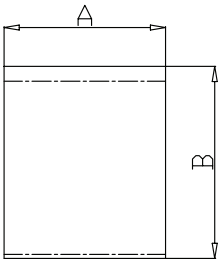

A=160mm、B=190mm

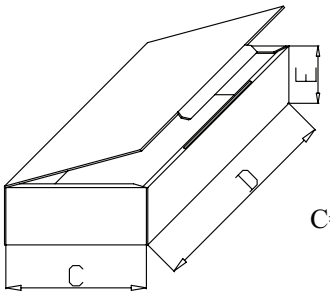

C=160mm、D=216mm、E=48mm

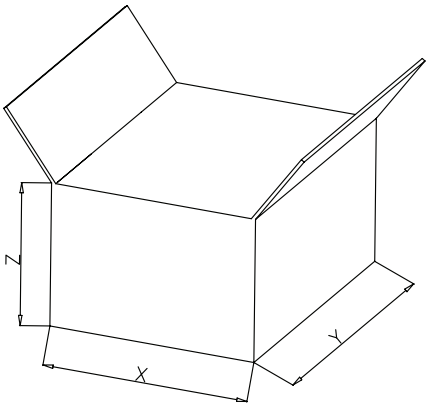

X=350mm、Y=455、Z=280mm

REVISION HISTORY

rev.	description	date
1.0	initial release	09/21/2021
1.01	logo, datasheet style update	08/05/2022
1.02	CUI Devices rebranded to Same Sky	09/12/2024
1.03	changed terminal plating	11/03/2025

The revision history provided is for informational purposes only and is believed to be accurate.

Same Sky offers a one (1) year limited warranty. Complete warranty information is listed on our website.

Same Sky reserves the right to make changes to the product at any time without notice. Information provided by Same Sky is believed to be accurate and reliable. However, no responsibility is assumed by Same Sky for its use, nor for any infringements of patents or other rights of third parties which may result from its use.

Same Sky products are not authorized or warranted for use as critical components in equipment that requires an extremely high level of reliability. A critical component is any component of a life support device or system whose failure to perform can be reasonably expected to cause the failure of the life support device or system, or to affect its safety or effectiveness.