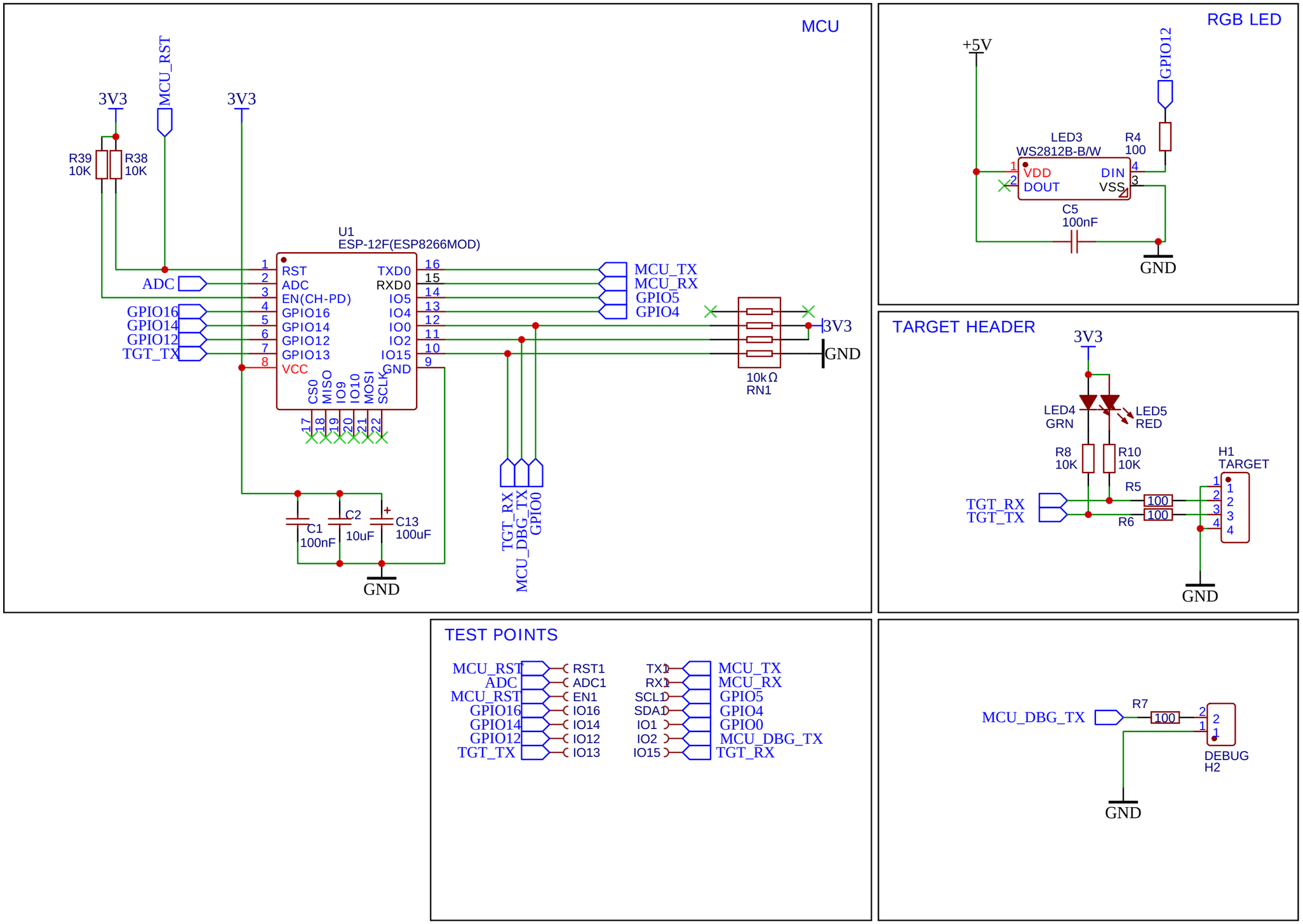

TITLE: ESP8266 WiFi Remote Terminal	REV: A
Date: 2022-05-20	Sheet: 1/2
EasyEDA V4.11.9	Drawn By: andriy@sonocotta.com

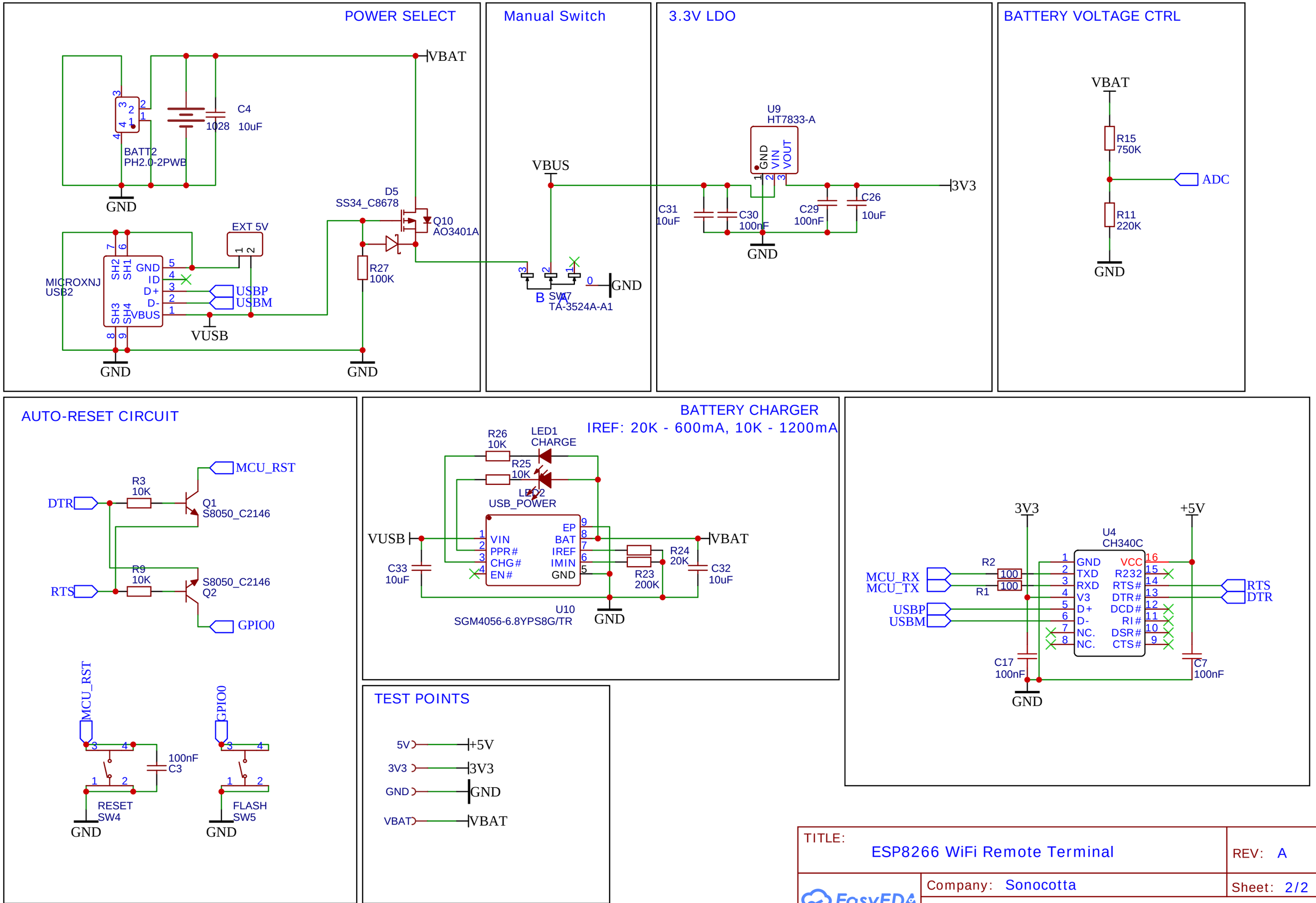

TITLE: ESP8266 WiFi Remote Terminal		REV: A
EasyEDA	Company: Sonocotta	Sheet: 2/2
	Date: 2022-05-20	Drawn By: andriy@sonocotta.com