2D Convolver (3x3)

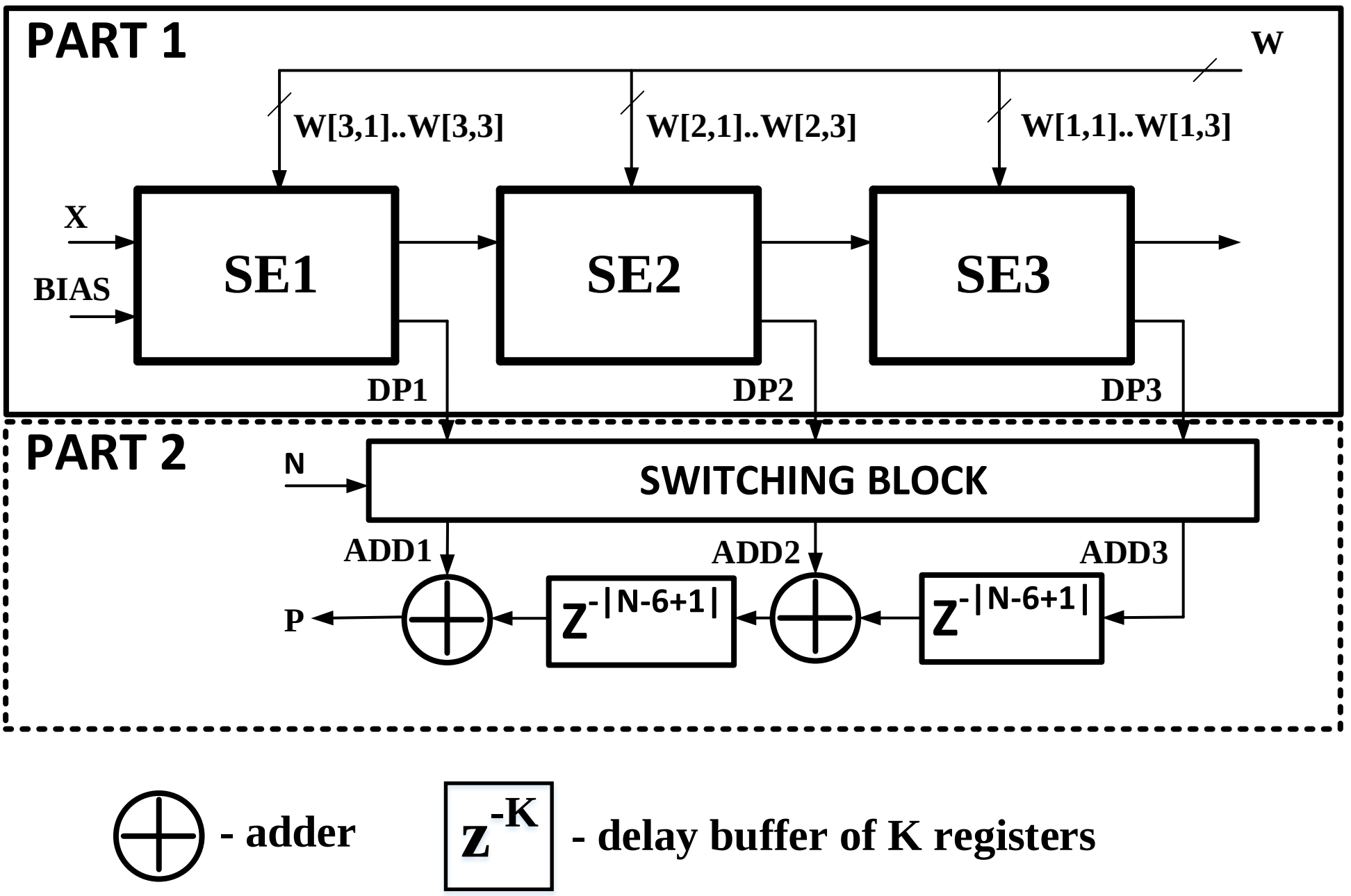

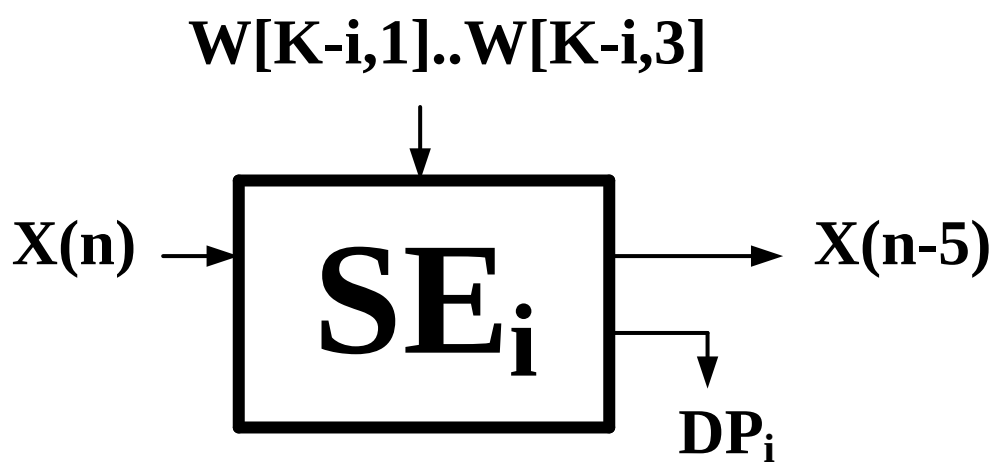

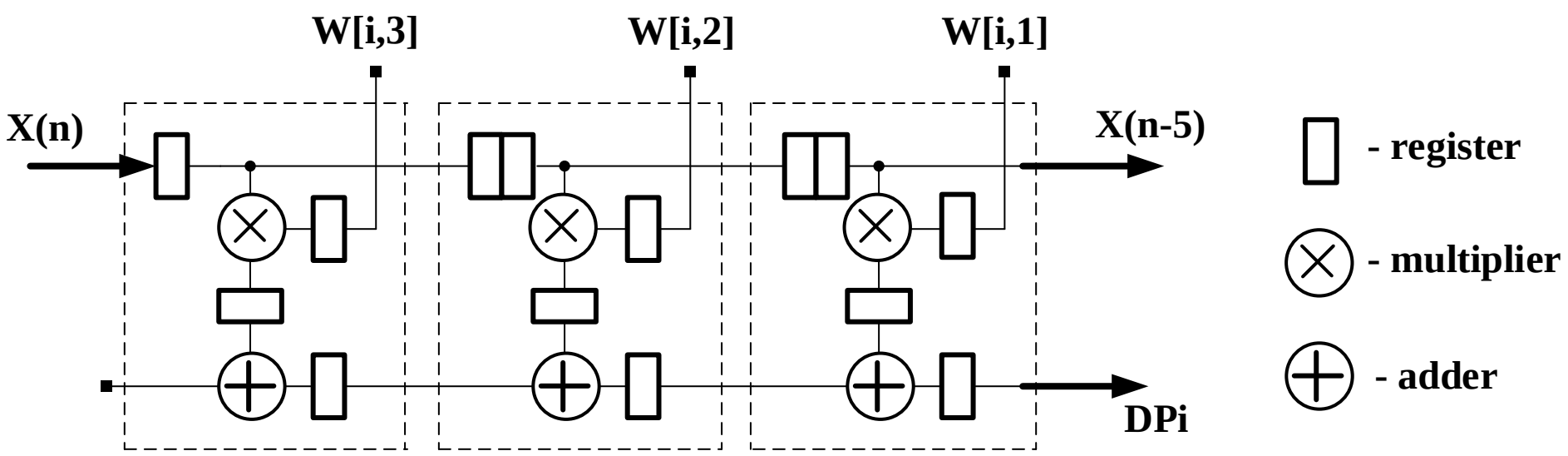
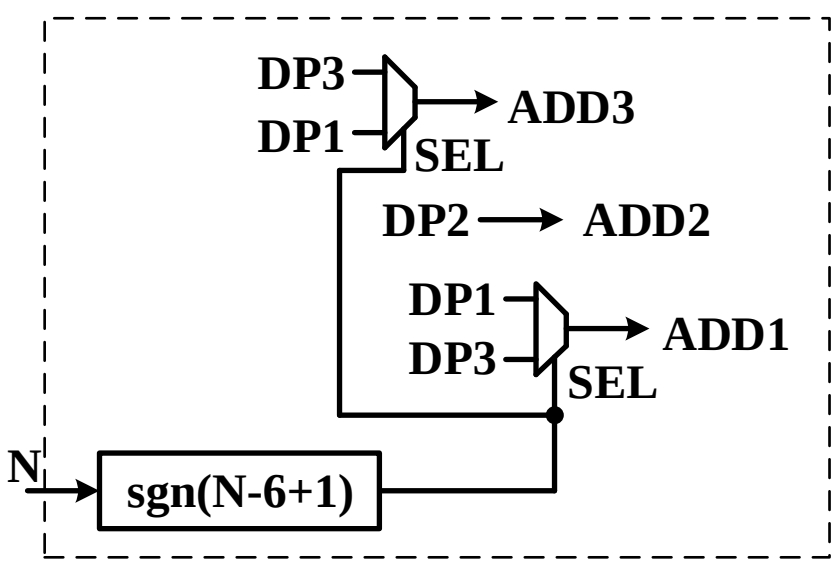
Switching Block